Effective March 16, 2020, Governor Greg Abbott authorized the temporary suspension of certain statutory provisions of the Texas Open Meetings Act. This meeting of the City Council of the City of Midland is being held pursuant to such authorization and will limit face-to-face interactions for the purpose of slowing the spread of the coronavirus (COVID-19).

AGENDA FOR CITY COUNCIL MEETING
300 North Loraine
Midland, Texas
April 28, 2020 – 10:00 AM
Council Chamber - City Hall

The Midland City Council agenda is posted for public notice at least 72 hours prior to the Tuesday meetings. All requests to be placed on the Council agenda by the public must be submitted to the City Manager, in writing, at least one week before the Council meetings. Such written requests must be in sufficient detail to identify the subject matter as well as the contact person who will represent the matter before the Council. The City Council reserves the right to not consider matters over which the City has no jurisdiction.

Videoconference Information

Please click the link below to join the webinar:
https://zoom.us/j/97148676152?pwd=REg5TVhaOUdOZFp3RjNlbmhXN1psZz09
Password: 047826

Or iPhone one-tap:
US: +13462487799,,97148676152# or +16699009128,,97148676152#

Or Telephone:
Dial (for higher quality, dial a number based on your current location):
US: +1 346 248 7799 or +1 669 900 9128 or +1 253 215 8782 or +1 301 715 8592 or +1 312 626 6799 or +1 646 558 8656

Webinar ID: 971 4867 6152
International numbers available: https://zoom.us/u/abFm97LVn

OPENING ITEMS

1. Invocation - Mayor Patrick Payton

2. Pledge of Allegiance

CONSENT AGENDA

3. Consider a motion approving the following minutes:

   a. Regular meeting of April 14, 2020.

4. Consider a resolution awarding a contract for the Fire Station 5 Project (900307) and Fire Station 11, Fueling Station and Wash Bays Project (900335) to MW Builders, Inc., for a total cost of $10,899,500.00; approving $369,295.45 in contingencies; and allocating a total combined amount of $11,424,304.75 for said projects. (PURCHASING) (2020 - 076)

5. Consider a resolution of the City of Midland, Texas, finding that the application of Oncor Electric Delivery Company, LLC ("ONCOR") for approval to amend its Distribution Cost Recovery Factor to increase distribution rates within the City should be denied; authorizing participation with Oncor Cities Steering Committee; authorizing the hiring of legal counsel and consulting services; finding that the City's reasonable rate case expenses shall be reimbursed by Oncor; finding that the meeting at which this resolution is passed is open to the public as required by law; and authorizing and directing the City Secretary to send copies of this resolution to Oncor and legal counsel. (CITY MANAGER'S OFFICE) (2020 - 077)

6. Consider a resolution authorizing the Mayor, City Manager, and City Attorney to accept and execute the Coronavirus Aid, Relief, and Economic Security (CARES) Act Grant for the Department of Airports in the amount of $22,935,854.00. (AIRPORTS) (2020 - 078)

7. Consider a resolution authorizing the termination of the existence of the Midland Spaceport Development Corporation (the "Corporation"); authorizing and directing the Mayor and the City Secretary to execute a certificate of termination on behalf of the City of Midland, Texas, in accordance with Section 501.403 of the Texas Local Government Code; authorizing the City Secretary to deliver four originals of the Corporation's certificate of termination to the Texas Secretary of State for filing; authorizing and directing the City Comptroller to pay a filing fee to the Texas Secretary of State; authorizing and directing the City Manager or the City Manager's designee to sign all documents and take all actions necessary or appropriate to effect the transfer of all funds and property owned by the Corporation upon termination of the Corporation to the authorizing units; and authorizing and directing the City Comptroller to transfer said funds to the City of Midland, Texas, and Midland County. (AIRPORTS) (2020 - 079)

8. Consider a resolution authorizing the sole-source purchase of two (2) TruNarc Drug Detection and Identification Systems for the Police Department from Thermo Scientific Portable Analytical Instruments, Inc., for a total cost of $51,506.00. (POLICE) (2020 - 080)

9. Consider a motion authorizing the execution of a Surface Use Agreement with HEP Fin-Tex/Trust River, L.P., regarding City-owned property described as Lot 2A, Block 11, Midland International Airport Industrial Park Addition, Lots 3B, 4B, 4C, and 5B, Block 11, Midland International Airport Industrial Park Addition 6, and Lots 11A and 12A, Block 10, Midland International Airport Industrial Park Addition 7, City and County of Midland, Texas. (UTILITIES) (051-2020)

SECOND READINGS

10. Consider an ordinance on second reading vacating and abandoning a 0.2825-acre portion of alley right-of-way located adjacent to Lot 2, Block 19, Elmwood Addition, Section 3, and Lots 1 through 12, Block 6, S. W. Estes Addition, City and County of Midland, Texas (generally located on the north side of West Kansas Avenue, approximately 481 feet east of North Big Spring Street); adopting the appraisal by the City Manager of $24,608.00; and ordering recordation by the City Secretary. (DEVELOPMENT SERVICES) (First reading April 14, 2020) (10072)

11. Consider an ordinance on second reading amending the Zoning District Map of the City of Midland to rezone Lots 3 and 4, Block 2, Overstreet Addition, Section 2, City and County of Midland, Texas, from LI, Light Industrial District to C, Commercial District (generally located at the southwest corner of the intersection of Garden City Highway and King Street); containing a cumulative clause; containing a savings and severability clause; providing for a maximum penalty or fine of two thousand dollars ($2,000.00); and ordering publication. (DEVELOPMENT SERVICES) (First reading April 14, 2020) (10073)

PUBLIC HEARINGS

12. Hold a public hearing and consider an ordinance amending the Zoning District Map of the City of Midland to grant a Specific Use Designation with Term for a 5,460-square foot portion of Lot 2, Block 1, Corporate Plaza, Section 21, City and County of Midland, Texas (generally located on the south side of Spring Park Drive, approximately 685 feet east of North Big Spring Street), which is presently zoned RR, Regional Retail District, allowing said property to be used for the sale of all alcoholic beverages in a restaurant for on-premises consumption; making said designation subject to certain conditions and restrictions contained herein; containing a cumulative clause; containing a savings and severability clause; providing for a maximum penalty or fine of two thousand dollars ($2,000.00); and ordering publication. (DEVELOPMENT SERVICES) (10074)

13. Hold a public hearing and consider an ordinance amending the Zoning District Map of the City of Midland to grant a Specific Use Designation with Term for a 4,472-square foot portion of Lot 1, Block 8, Polo Park, Section 3, City and County of Midland, Texas (generally located southeast of the intersection of

North Garfield Street and Castleford Road), which is presently zoned PD, Planned Development District for a Shopping Center, allowing said property to be used for the sale of all alcoholic beverages in a restaurant for on-premises consumption; making said designation subject to certain conditions and restrictions contained herein; containing a cumulative clause; containing a savings and severability clause; providing for a maximum penalty or fine of two thousand dollars ($2,000.00); and ordering publication. (DEVELOPMENT SERVICES) (10075)

14. Hold a public hearing and consider an ordinance amending the Zoning District Map of the City of Midland to rezone Lot 14, Block 1, Eastover Addition, City and County of Midland, Texas, from MF-22, Multiple-Family Dwelling District to SF-3, Single-Family Dwelling District (generally located on the east side of North Adams Street, approximately 80 feet south of East Illinois Avenue); containing a cumulative clause; containing a savings and severability clause; providing for a maximum penalty or fine of two thousand dollars ($2,000.00); and ordering publication. (DEVELOPMENT SERVICES) (10076)

15. Hold a public hearing and consider an ordinance amending the Zoning District Map of the City of Midland to grant a Specific Use Designation with Term for a 6,166-square foot portion of Lot 2A, Block 1A, Midkiff Plaza Addition, Section 8, City and County of Midland, Texas (generally located on the south side of West 250 Loop North, approximately 1,036 feet east of North Midkiff Road), which is presently zoned PD, Planned Development District for a Shopping Center, allowing said property to be used for the sale of all alcoholic beverages in a restaurant for on-premises consumption; making said designation subject to certain conditions and restrictions contained herein; containing a cumulative clause; containing a savings and severability clause; providing for a maximum penalty or fine of two thousand dollars ($2,000.00); and ordering publication. (DEVELOPMENT SERVICES) (10077)

16. Hold a public hearing and consider an ordinance amending the Zoning District Map of the City of Midland to grant a Specific Use Designation with Term for Lot 2A, Block 3, Westridge Park Addition, Section 10, City and County of Midland, Texas (generally located on the west side of Tradewinds Boulevard, approximately 300 feet south of Andrews Highway), which is presently zoned PD, Planned Development District for a Shopping Center, allowing said property to be used for the sale of all alcoholic beverages in a bar for on-premises consumption; making said designation subject to certain conditions and restrictions contained herein; containing a cumulative clause; containing a savings and severability clause; providing for a maximum penalty or fine of two thousand dollars ($2,000.00); and ordering publication. (DEVELOPMENT SERVICES) (10078)

17. Hold a public hearing and consider an ordinance amending the Zoning District Map of the City of Midland to rezone Lots 13 and 14, Block 145, Southern

Addition, City and County of Midland, Texas, from RR, Regional Retail District to SF-3, Single-Family Dwelling District (generally located on the east side of South Baird Street, approximately 110 feet north of East Pennsylvania Avenue); containing a cumulative clause; containing a savings and severability clause; providing for a maximum penalty or fine of two thousand dollars ($2,000.00); and ordering publication. (DEVELOPMENT SERVICES) (10079)

18. Hold a public hearing and consider an ordinance amending the Zoning District Map of the City of Midland to rezone Lots 19 through 31, Block 5, Lots 1 through 16, Block 8, Lots 1 through 9, Block 9, and Lots 1 through 4, Block 10, Quail Ridge Addition, Section 6, Lots 10 through 20, Block 9, Lots 5 through 18, Block 10, and Lots 1 through 14, Block 11, Quail Ridge Addition, Section 7, a 7.432-acre tract of land out of Lot 1, Block 1, Quail Ridge Addition, and a 0.004-acre tract of land out of Quail Ridge Addition, Section 2, City and County of Midland, Texas, from PD, Planned Development District for a Housing Development to an amended PD, Planned Development District for a Housing Development (generally located at the northwest corner of the intersection of Chukar Lane and Beachwood Street); containing a cumulative clause; containing a savings and severability clause; providing for a maximum penalty or fine of two thousand dollars ($2,000.00); and ordering publication. (DEVELOPMENT SERVICES) (10080)

MISCELLANEOUS

19. Consider an ordinance establishing intersection stops at various locations within the City of Midland, Texas; authorizing and directing the Traffic Engineer to install appropriate signs and markings at the designated locations; containing a cumulative clause; containing a savings and severability clause; providing for a maximum penalty or fine of two hundred dollars ($200.00); and ordering publication. (ENGINEERING SERVICES) (10081)

20. Consider a motion making appointments to various boards and commissions. (CITY SECRETARY'S OFFICE)

EXECUTIVE SESSION

21. Pursuant to Texas Government Code §551.101, the Council will hold an Executive Session which is closed to the public to discuss the following matters as permitted under the following Texas Government Code Sections:

    a. Section 551.071, Consultation with Attorney

        a.1. Discuss a matter in which the duty of the attorney to the governmental body under the Texas Disciplinary Rules of Professional Conduct of the State Bar of Texas clearly conflicts with Chapter 551 of the Texas Government Code.

b. Section 551.074, Personnel Matters

b.1. Deliberate the appointment of members to the Midland Development Corporation board of directors and interview applicants.

Respectfully Submitted,

Courtney B. Sharp
City Manager

MEETING ASSISTANCE INFORMATION: The Midland City Hall and Council Chamber are wheelchair accessible. If you need special assistance to participate in this meeting, please contact the City Secretary's Office at (432) 685-7430. Notification 48 hours prior to the meeting will enable the City to make reasonable arrangements to ensure accessibility to this meeting.

MIDLAND CITY COUNCIL
MINUTES
April 14, 2020

REGULAR SESSION
The City Council convened in regular session in the Council Chamber, City Hall, Midland, Texas, at 10:00 a.m., April 14, 2020.

Council Members present: Mayor Patrick Payton, Mayor Pro Tem Spencer Robnett (At-Large), Council Member Scott Dufford (District 1), Council Member Jack Ladd (District 3), and Council Member Lori Blong (District 4).

Council Members present via Zoom: Council Member Michael Trost (At-Large), Council Member John Norman (District 2).

The Agenda Items were heard in the following order: 1-3, 5-6, 8-9, 11-15, 4, 7, 10, 16-29.

Mayor Payton called the meeting to order at 10:00 a.m.

OPENING ITEMS

1. Invocation – Mayor Payton

2. Pledge of Allegiance

CONSENT AGENDA

Council Member Ladd moved to approve Consent Agenda items 3 - 15 excluding 4, 7, 10; seconded by Council Member Robnett. The motion carried by the following vote: AYE: Blong, Trost, Robnett, Payton, Dufford, Ladd, Norman. NAY: None. ABSTAIN: None. ABSENT: None.

3. Approved a motion approving the following minutes:

   a. Regular Meeting of March 24, 2020

   b. Special Meeting of March 31, 2020

   c. Special Meeting of April 7, 2020

5. Approved a motion authorizing the City Manager or the City Manager's designee to advertise a request for bids for the Landfill Cells five (5) and six (6) Project. (PURCHASING) (041-2020)

6. Approved a resolution approving the sole source purchase of eCitation software and fifty-three (53) electronic ticket writers from Tyler Technologies, Inc. for the Police Department. (PURCHASING)

DRAFT

RESOLUTION NO. 2020 - 072

RESOLUTION AUTHORIZING THE SOLE-SOURCE PURCHASE OF FIFTY-THREE (53) ELECTRONIC TICKET WRITERS FOR THE POLICE DEPARTMENT FROM TYLER TECHNOLOGIES, INC., FOR A TOTAL COST OF $168,915.00

8. Approved a motion authorizing the Director of Airports to advertise a request for bids for the MAF Rehabilitate North, Terminal and South Apron Concrete Pavement Project. (AIRPORTS) (042-2020)

9. Approved a motion authorizing the Director of Airports to advertise a request for bids for the MAF Rehabilitate Northwest Taxi Lane and Executive Apron Project. (AIRPORTS) (043-2020)

11. Approved a resolution approving the issuance of an Operating Certificate for XPress Routes Limousine Service. (POLICE)

RESOLUTION NO. 2020 - 075

RESOLUTION AUTHORIZING AN OPERATING CERTIFICATE FOR RIDEY TRANSPORTATION INC. DBA XPRESS ROUTES TO OPERATE A TAXICAB BUSINESS; SETTING FORTH CONDITIONS ACCOMPANYING THE CERTIFICATE; AND ESTABLISHING THE TERMS OF THE CERTIFICATE

12. Approved a motion accepting a Fiscal Year 2019 grant award modification from the High Intensity Drug Trafficking Areas Program in the total amount of $53,552.00; and appropriating the amount of $53,552.00 from the General Fund (001) Unappropriated Fund Balance (35650) to the FY2019 HIDTA Grant Project (700224-005). (POLICE) (044-2020)

13. Approved a motion accepting a Fiscal Year 2020 grant award from the High Intensity Drug Trafficking Areas Program in the amount of $158,737.00; and appropriating the amount of $158,737.00 from the General Fund (001) Unappropriated Fund Balance (35650) to the FY2020 HIDTA Grant Project (700272). (POLICE) (045-2020)

14. Approved a motion authorizing the appropriation of $5,568.50 from the Police Technology and Equipment Fund (075) Unappropriated Fund Balance (35650) to the Minor Equipment / Tools (075110-52120) account; said funds being the proceeds from the sale of outdated service weapons and court-awarded firearms. (POLICE) (046-2020)

15. Approved a motion authorizing the execution of a Right-of-Way License between the City of Midland and Fasken Oil and Ranch, Ltd. regarding City-owned property described as Section 30, Block 39, Township 1 South, T&P RR Co. Survey, Midland County, Texas. (UTILITIES) (047-2020)

The following items were pulled from Consent Agenda and considered individually.

4. Consider a resolution ratifying the emergency repair of an 8" water main on C Street between Louisiana Avenue and Cuthbert Street for the Utilities Department. (PURCHASING)

DRAFT

RESOLUTION NO. 2020 - 071

RESOLUTION RATIFYING AND APPROVING THE EMERGENCY REPAIR OF A WATER MAIN LOCATED ON C STREET BETWEEN LOUISIANA AVENUE AND CUTHBERT AVENUE BY BOLER EQUIPMENT SERVICE, INC., FOR A TOTAL COST OF $254,138.00; AND APPROVING $50,827.60 IN CONTINGENCY FUNDS

Council Member Ladd asked for more information about the lack of subbase under the road. Utilities Director Carl Craigo reported they tested two or three others and found the same thing. These roads were built in the 80's.

Council Member Ladd moved to adopt Resolution No. 2020 - 071; seconded by Council Member Blong. The motion carried by the following vote: AYE: Blong, Trost, Robnett, Payton, Dufford, Ladd, Norman. NAY: None. ABSTAIN: None. ABSENT: None.

7. Consider a resolution awarding a contract to the sole bidder, Willis Electric Co., LP for the Various Traffic Signal Improvement Project for a total cost of $1,008,397.50 for the Traffic Operations Division. (PURCHASING)

RESOLUTION NO. 2020 - 073

RESOLUTION AWARDING A CONTRACT FOR THE VARIOUS TRAFFIC SIGNAL IMPROVEMENTS PROJECT TO THE SOLE BIDDER, WILLIS ELECTRIC CO., LP OF ABILENE, TEXAS, AT A TOTAL COST OF$1,008,397.50; APPROPRIATING FUNDS; AND AUTHORIZING PAYMENT

Council Member Ladd asked if it would be better to get more bids at this time since construction costs have decreased. Traffic Engineer Mike Pacelli reported this is the single bidder he has received on all traffic signal projects in the last six years.

Council Member Robnett moved to adopt Resolution No. 2020 - 073; seconded by Council Member Ladd. The motion carried by the following vote: AYE: Blong, Trost, Robnett, Payton, Dufford, Ladd, Norman. NAY: None. ABSTAIN: None. ABSENT: None.

10. Consider a resolution authorizing legal fees related to oil and gas matters to be paid from the General Liability Fund (702730) Legal Fees (53410) budget account. (CITY ATTORNEY'S OFFICE)

RESOLUTION NO. 2020 - 074

RESOLUTION AUTHORIZING LEGAL FEES RELATED TO OIL AND GAS MATTERS TO BE PAID FROM THE GENERAL LIABILITY FUND (702730) LEGAL FEES (53410) BUDGET ACCOUNT

Council Member Ladd inquired about the legal fees. City Attorney John Ohnemiller explained this is a housekeeping issue to combine two different fee types into one account. The oil and gas fees have typically been reimbursed by the operators.

Council Member Robnett moved to adopt Resolution No. 2020 - 074; seconded by Council Member Dufford. The motion carried by the following vote: AYE: Blong, Trost, Robnett, Payton, Dufford, Ladd, Norman. NAY: None. ABSTAIN: None. ABSENT: None.

DRAFT

SECOND READINGS

16. Consider an ordinance on second reading on a request by Cumberland & Western Resources, LLC, for the initial zoning of a 37.9539-acre tract of land generally located on the west side of State Highway 158, approximately 2,372 feet north of State Highway 191 - Extraterritorial Jurisdiction. (DEVELOPMENT SERVICES) (First reading held on March 24, 2020)

ORDINANCE NO. 10064

AN ORDINANCE ESTABLISHING THE INITIAL ZONING CLASSIFICATION OF THE AREA INDICATED AS BEING A 37.9539-ACRE TRACT OF LAND OUT OF SECTION 35, BLOCK 40, T-1-S, T&P RR CO. SURVEY, MIDLAND COUNTY, TEXAS, AS AN MF-22, MULTIPLE-FAMILY DWELLING DISTRICT; SAID TRACT BEING GENERALLY LOCATED ON THE WEST SIDE OF STATE HIGHWAY 158, APPROXIMATELY 2,372 FEET NORTH OF STATE HIGHWAY 191; CONTAINING A CUMULATIVE CLAUSE; CONTAINING A SAVINGS AND SEVERABILITY CLAUSE; PROVIDING FOR A MAXIMUM PENALTY OR FINE OF TWO THOUSAND DOLLARS ($2,000.00); AND ORDERING PUBLICATION

Deputy City Secretary SueAnn Reyes read the caption of Ordinance No. 10064.

Council Member Ladd moved to approve the second and final reading of Ordinance No. 10064 in accordance with the Charter of the City of Midland; seconded by Council Member Trost. The motion carried by the following vote: AYE: Blong, Trost, Robnett, Payton, Dufford, Ladd, Norman. NAY: None. ABSTAIN: None. ABSENT: None.

17. Consider an ordinance on second reading on a request by Cornerstone Funding, LLC for a Zone Change from PD, Planned District for an Office Center to an Amended PD, Planned Development District for an Office Center generally located on the southwest corner of the intersection of Homestead Boulevard and Hereford Boulevard. (DEVELOPMENT SERVICES) (First reading held on March 24, 2020)

ORDINANCE NO. 10065

AN ORDINANCE AMENDING THE ZONING DISTRICT MAP OF THE CITY OF MIDLAND TO REZONE LOT 1A, BLOCK 2, GRASSLAND ESTATES WEST, SECTION 2, CITY AND COUNTY OF MIDLAND, TEXAS, FROM PD, PLANNED DEVELOPMENT DISTRICT FOR AN OFFICE CENTER TO AN AMENDED PD, PLANNED DEVELOPMENT DISTRICT FOR AN OFFICE CENTER (GENERALLY LOCATED AT THE SOUTHWEST CORNER OF THE INTERSECTION OF HOMESTEAD BOULEVARD AND HEREFORD BOULEVARD); CONTAINING A CUMULATIVE CLAUSE; CONTAINING A SAVINGS AND SEVERABILITY CLAUSE; PROVIDING FOR A MAXIMUM PENALTY OR FINE OF TWO THOUSAND DOLLARS ($2,000.00); AND ORDERING PUBLICATION

Deputy City Secretary SueAnn Reyes read the caption of Ordinance No. 10065.

Council Member Robnett moved to approve the second and final reading of Ordinance No. 10065 in accordance with the Charter of the City of Midland; seconded by Council Member Ladd. The motion carried by the following vote: AYE: Blong, Trost, Robnett, Payton, Dufford, Ladd, Norman. NAY: None. ABSTAIN: None. ABSENT: None.

DRAFT

18. Consider an ordinance on second reading on a request by Midland Community Development Corporation for a Zone Change from C, Commercial District, to SF-3, Single Family Dwelling District, generally located on the east side of South Stonewall Street, approximately 173 feet south of East Indiana Avenue. (DEVELOPMENT SERVICES) (First reading held on March 24, 2020)

ORDINANCE NO. 10066

AN ORDINANCE AMENDING THE ZONING DISTRICT MAP OF THE CITY OF MIDLAND TO REZONE LOT 9, BLOCK 9, GREENWOOD ADDITION, SECTION 2, CITY AND COUNTY OF MIDLAND, TEXAS, FROM C, COMMERCIAL DISTRICT TO SF-3, SINGLE-FAMILY DWELLING DISTRICT (GENERALLY LOCATED ON THE EAST SIDE OF SOUTH STONEWALL STREET, APPROXIMATELY 173 FEET SOUTH OF EAST INDIANA AVENUE); CONTAINING A CUMULATIVE CLAUSE; CONTAINING A SAVINGS AND SEVERABILITY CLAUSE; PROVIDING FOR A MAXIMUM PENALTY OR FINE OF TWO THOUSAND DOLLARS ($2,000.00); AND ORDERING PUBLICATION

Deputy City Secretary SueAnn Reyes read the caption of Ordinance No. 10066.

Council Member Robnett moved to approve the second and final reading of Ordinance No. 10066 in accordance with the Charter of the City of Midland; seconded by Council Member Ladd. The motion carried by the following vote: AYE: Blong, Trost, Robnett, Payton, Dufford, Ladd, Norman. NAY: None. ABSTAIN: None. ABSENT: None.

19. Consider an ordinance on a second reading on a request by Edward Martinez for a zone change from a MF-22, Multiple-Family Dwelling District to SF-3, Single-Family Dwelling District generally located on the northeast corner of the intersection of East New York Avenue and South Benton Street. (DEVELOPMENT SERVICES) (First reading held on March 24, 2020)

ORDINANCE NO. 10068

AN ORDINANCE AMENDING THE ZONING DISTRICT MAP OF THE CITY OF MIDLAND TO REZONE LOT 7, BLOCK 24, GREENWOOD ADDITION, THIRD, FOURTH AND FIFTH SECTIONS, CITY AND COUNTY OF MIDLAND, TEXAS, FROM MF-22, MULTIPLE-FAMILY DWELLING DISTRICT TO SF-3, SINGLE-FAMILY DWELLING DISTRICT (GENERALLY LOCATED AT THE NORTHEAST CORNER OF THE INTERSECTION OF EAST NEW YORK AVENUE AND SOUTH BENTON STREET); CONTAINING A CUMULATIVE CLAUSE; CONTAINING A SAVINGS AND SEVERABILITY CLAUSE; PROVIDING FOR A MAXIMUM PENALTY OR FINE OF TWO THOUSAND DOLLARS ($2,000.00); AND ORDERING PUBLICATION

Deputy City Secretary SueAnn Reyes read the caption of Ordinance No. 10068.

Council Member Blong moved to approve the second and final reading of Ordinance No. 10068 in accordance with the Charter of the City of Midland; seconded by Council Member Ladd. The motion carried by the following vote: AYE: Blong, Trost, Robnett, Payton, Dufford, Ladd, Norman. NAY: None. ABSTAIN: None. ABSENT: None.

20. Consider an ordinance on second reading on a request by Joe Dominguez, for a Zone Change from a LI, Light Industrial, to a SF-3, Single Family Dwelling, generally located on the east side of South Weatherford Drive, approximately 866 feet southwest of East Industrial Drive). (DEVELOPMENT SERVICES) (First reading held on March 24, 2020)

ORDINANCE NO. 10069

AN ORDINANCE AMENDING THE ZONING DISTRICT MAP OF THE CITY OF MIDLAND TO REZONE LOTS 15 AND 16, BLOCK 133, SOUTHERN ADDITION, CITY AND COUNTY OF MIDLAND, TEXAS, FROM LI, LIGHT INDUSTRIAL DISTRICT TO SF-3, SINGLE-FAMILY DWELLING DISTRICT (GENERALLY LOCATED ON THE EAST SIDE OF SOUTH WEATHERFORD STREET, APPROXIMATELY 86 FEET NORTH OF EAST WASHINGTON AVENUE); CONTAINING A CUMULATIVE CLAUSE; CONTAINING A SAVINGS AND SEVERABILITY CLAUSE; PROVIDING FOR A MAXIMUM PENALTY OR FINE OF TWO THOUSAND DOLLARS ($2,000.00); AND ORDERING PUBLICATION

Deputy City Secretary SueAnn Reyes read the caption of Ordinance No. 10069.

Council Member Robnett moved to approve the second and final reading of Ordinance No. 10069 in accordance with the Charter of the City of Midland; seconded by Council Member Ladd. The motion carried by the following vote: AYE: Blong, Trost, Robnett, Payton, Dufford, Ladd, Norman. NAY: None. ABSTAIN: None. ABSENT: None.

21. Consider an ordinance on second reading on a request by Irma Ogle for a zone change from PD, Planned District for a Shopping Center, to RR, Regional Retail District, generally located on the northwest corner of the intersection of Tradewinds Boulevard and Deauville Boulevard. (DEVELOPMENT SERVICES) (First reading held on March 24, 2020)

ORDINANCE NO. 10070

AN ORDINANCE AMENDING THE ZONING DISTRICT MAP OF THE CITY OF MIDLAND TO REZONE LOTS 5A AND 5B, BLOCK 3, WESTRIDGE PARK ADDITION, SECTION 14, CITY AND COUNTY OF MIDLAND, TEXAS, FROM PD, PLANNED DEVELOPMENT DISTRICT FOR A SHOPPING CENTER TO RR, REGIONAL RETAIL DISTRICT (GENERALLY LOCATED AT THE NORTHWEST CORNER OF THE INTERSECTION OF TRADEWINDS BOULEVARD AND DEAUVILLE BOULEVARD); CONTAINING A CUMULATIVE CLAUSE; CONTAINING A SAVINGS AND SEVERABILITY CLAUSE; PROVIDING FOR A MAXIMUM PENALTY OR FINE OF TWO THOUSAND DOLLARS ($2,000.00); AND ORDERING PUBLICATION

Deputy City Secretary SueAnn Reyes read the caption of Ordinance No. 10070.

Council Member Robnett moved to approve the second and final reading of Ordinance No. 10070 in accordance with the Charter of the City of Midland; seconded by Council Member Ladd. The motion carried by the following vote: AYE: Blong, Trost, Robnett, Payton, Dufford, Ladd, Norman. NAY: None. ABSTAIN: None. ABSENT: None.

22. Consider an ordinance on second reading of the City of Midland, Texas, amending the Tall City Tomorrow Comprehensive Plan as authorized by Chapter 213 of the Texas Local Government Code so as to revise the thoroughfare plan. (ENGINEERING SERVICES) (First reading held on March 24, 2020)

ORDINANCE NO. 10071

AN ORDINANCE OF THE CITY OF MIDLAND, TEXAS, AMENDING THE TALL CITY TOMORROW COMPREHENSIVE PLAN AS AUTHORIZED BY CHAPTER 213 OF THE TEXAS LOCAL GOVERNMENT CODE SO AS TO REVISE THE THOROUGHFARE PLAN; PROVIDING A SAVINGS AND SEVERABILITY CLAUSE; AND PROVIDING AN EFFECTIVE DATE OF MAY 1, 2020

DRAFT

Deputy City Secretary SueAnn Reyes read the caption of Ordinance No. 10071.

Council Member Robnett moved to approve the second and final reading of Ordinance No. 10071 in accordance with the Charter of the City of Midland; seconded by Council Member Ladd. The motion carried by the following vote: AYE: Blong, Trost, Robnett, Payton, Dufford, Ladd, Norman. NAY: None. ABSTAIN: None. ABSENT: None.

PUBLIC HEARINGS

23. Hold a public hearing regarding the proposed granting of oil and gas well permits to Permian Deep Rock Oil Co., LLC for the drilling of the following oil and gas wells: Charger #H110WB; Charger #H115WA; Mustang #H145WA; Mustang #H150WB; Mustang #H155WA; and Mustang #H160WB; said wells being generally located between 862 feet and 2,050 feet west of Rankin Highway and between 590 feet and 620 feet north of Dayton Road. (DEVELOPMENT SERVICES) (048-2020)

    Oil and Gas Compliance Officer Ron Jenkins gave a brief overview of the item noting it is similar to their wells permitted in the past. Their permits were originally issued in 2018 and have expired. They are asking for all of the same information. There are no letters of objection and they are requesting the same variances.

    Mayor Payton opened the public hearing at 10:23 a.m. There being no one present or on Zoom wishing to speak, the public hearing was immediately closed.

24. Hold a public hearing regarding the proposed granting of an oil and gas well permit to Permian Deep Rock Oil Co., LLC for the drilling of the following oil and gas well: Charger #H125WA; said well being generally located 2,433 feet west of South Garfield Street and 320 feet north of West County Road 111. (DEVELOPMENT SERVICES) (049-2020)

    Oil & Gas Compliance Officer Ron Jenkins gave a brief overview of the item noting it was similar to their other wells that were previously permitted in 2018. Everything is the same with the same variances as previously requested.

    Mayor Payton opened the public hearing at 10:25 a.m. There being no one present or on Zoom wishing to speak, the public hearing was immediately closed.

25. Hold a public hearing regarding the proposed granting of oil and gas well permits to Endeavor Energy Resources, L.P. for the drilling of the following oil and gas wells: Bankhead 4-33 Unit 2A #253; Bankhead 4-33 Unit 2A #261; Bankhead 4-33 Unit 2A #271; Bankhead 4-33 Unit 2A #272; and Bankhead 4-33 Unit 2A #281; said wells being generally located between 590 feet and 591 feet north of West I-20 and between 1,179 feet and 1,279 feet east of South Midkiff Road. (DEVELOPMENT SERVICES) (050-2020)

    Oil and Gas Compliance Officer Ron Jenkins gave a brief overview of the item noting Endeavor has a surface agreement. A sound study was completed with the recommendation to put up a 260-foot 24-foot-high sound wall to the east near the commercial structure. There are notices of objection from a nearby surface owner with the complaint of nearby water wells and an eyesore on the frontage. The variances they

are requesting are similar to those requested in the past including landscaping and for one large frac pit.

Mayor Payton opened the public hearing at 10:27 a.m. There being no one present or on Zoom wishing to speak, the public hearing was immediately closed.

Council Member Trost inquired about the landscape variance. Mr. Jenkins explained that the surface owner does not want the City's landscaping plan.

26. Hold a public hearing and consider an ordinance on a request by YMCA of Midland for a vacation of the 0.2825-acre portion of alley right-of-way, generally located on the north side of West Kansas Street, approximately 481 feet east of North Big Spring Street. (DEVELOPMENT SERVICES)

ORDINANCE NO. 10072

AN ORDINANCE VACATING AND ABANDONING A 0.2825-ACRE PORTION OF ALLEY RIGHT-OF-WAY LOCATED ADJACENT TO LOT 2, BLOCK 19, ELMWOOD ADDITION, SECTION 3, AND LOTS 1 THROUGH 12, BLOCK 6, S. W. ESTES ADDITION, CITY AND COUNTY OF MIDLAND, TEXAS (GENERALLY LOCATED ON THE NORTH SIDE OF WEST KANSAS AVENUE, APPROXIMATELY 481 FEET EAST OF NORTH BIG SPRING STREET); ADOPTING THE APPRAISAL BY THE CITY MANAGER OF $24,608.00; AND ORDERING RECORDATION BY THE CITY SECRETARY

Deputy City Secretary SueAnn Reyes read the caption of Ordinance No. 10072.

Development Services Director Chuck Harrington gave a brief overview of item noting it is a request for vacation of right-of-way for the future expansion at YMCA. There are some utilities in the right-of-way so a utility easement will need to be maintained until all utilities have been moved. The value of the land is $2 per square foot or $24,608.00. Staff recommends approval.

Council Member Ladd asked why the Traffic Division is opposed. Mr. Harrington clarified that they were not opposed but had concern for a dead-end alley. He could examine it for elimination in general. Council Member Ladd asked why they wanted to expand in that direction when they have room in other areas.

Christian Beardon, YMCA, via Zoom, reported the board is looking to build a daycare center to serve Midland as this has been identified as a vital need. They are building to the east and will not be building directly over the alley but need the easement to allow access to their main facility. Council Member Ladd thanked YMCA for all they have done in providing daycare for first responders.

Council Member Robnett asked Ms. Beardon if the $24,000 were waived, would they use that same amount for daycare. Ms. Beardon reported she was about to have a meeting with her board, and she would share that information with them.

Mayor Payton opened the public hearing at 10:32 a.m. There being no one present or on zoom wishing to speak, the public hearing was immediately closed.

DRAFT

Council Member Robnett moved approval of the first of two readings of Ordinance No. 10072 in accordance with the Charter of the City of Midland with the amendment to waive the $24,608 fee in exchange for YMCA using the fees for daycare; seconded by Council Member Dufford. The motion carried by the following vote: AYE: Blong, Trost, Robnett, Payton, Dufford, Ladd, Norman. NAY: None. ABSTAIN: None. ABSENT: None.

27. Hold a public hearing and consider an ordinance on a request by Midland (King) DTP, LLC, for a zone change from LI, Light Industrial District to C, Commercial District generally located on the southwest corner of the intersection of Garden City Highway and King Street. (DEVELOPMENT SERVICES)

ORDINANCE NO. 10073

AN ORDINANCE AMENDING THE ZONING DISTRICT MAP OF THE CITY OF MIDLAND TO REZONE LOTS 3 AND 4, BLOCK 2, OVERSTREET ADDITION, SECTION 2, CITY AND COUNTY OF MIDLAND, TEXAS, FROM LI, LIGHT INDUSTRIAL DISTRICT TO C, COMMERCIAL DISTRICT (GENERALLY LOCATED AT THE SOUTHWEST CORNER OF THE INTERSECTION OF GARDEN CITY HIGHWAY AND KING STREET); CONTAINING A CUMULATIVE CLAUSE; CONTAINING A SAVINGS AND SEVERABILITY CLAUSE; PROVIDING FOR A MAXIMUM PENALTY OR FINE OF TWO THOUSAND DOLLARS ($2,000.00); AND ORDERING PUBLICATION

Deputy City Secretary SueAnn Reyes read the caption of Ordinance No. 10073.

Development Services Director Chuck Harrington gave a brief overview of the item noting it is for a zone change to build a retail store. It is currently vacant land and would be used as a 9,000 square foot retail space. The item has been reviewed by all departments and approved. This is in the special study area and this is the first step in that process. On the memo it said there was one letter of objection but there are none.

Mayor Payton opened the public hearing at 10:35 a.m. There being no one present or on Zoom wishing to speak, the public hearing was immediately closed.

Council Member Ladd moved approval of the first of two readings of Ordinance No. 10073 in accordance with the Charter of the City of Midland; seconded by Council Member Robnett. The motion carried by the following vote: AYE: Blong, Trost, Robnett, Payton, Dufford, Ladd, Norman. NAY: None. ABSTAIN: None. ABSENT: None.

MISCELLANEOUS

28. Approved a motion making appointments to various Boards and Commissions.

Council Member Robnett moved to appoint J. Anette Jensen to the Animal Services Advisory Board; seconded by Council Member Ladd. The motion carried by the following vote: AYE: Blong, Trost, Robnett, Payton, Dufford, Ladd, Norman. NAY: None. ABSTAIN: None. ABSENT: None.

Council Member Ladd moved to move Council Member Lori Blong from member of the Midland Development Corporation to Council Liaison; seconded by Council Member Norman. The motion carried by the following vote: AYE: Blong, Trost, Robnett, Payton, Dufford, Ladd, Norman. NAY: None. ABSTAIN: None. ABSENT: None.

DRAFT

Council Member Trost moved to appoint Lourcey Sams to the Midland Development Corporation. Discussion ensued about the best way to interview candidates for MDC. Mayor Payton suggested moving forward with the remainder of appointments that could be made and then scheduling Executive Session at the next meeting to give time for Council to interview candidates or to interview candidates during Executive Session. Council Member Trost withdrew his motion.

Council Member Blong moved to consider Midland Development Corporation applicants in executive session at the next meeting in two weeks; seconded by Council Member Robnett. The motion carried by the following vote: AYE: Blong, Trost, Robnett, Payton, Dufford, Ladd, Norman. NAY: None. ABSTAIN: None. ABSENT: None.

Council Member Blong reported that the Midland Spaceport Development Corporation was created to manage a grant received that is now fully expended. They have a continuing requirement to pay for a yearly audit and money has to be moved from the General Fund to do so each year. She would be in favor of restructuring them as a subcommittee of the airport board which would make the audit requirement go away. City Attorney John Ohnemiller clarified that the Spaceport board is a separate entity and dissolving it would take care of the audit. Upon dissolution, Council Member Blong is suggesting making it a subcommittee of the airport board to advise them of spaceport related matters.

City Manager Courtney Sharp reported the Governor's Office has been contacted and they are not anticipating any more funds being allocated to spaceports at this point. They were advised that a subcommittee would be formed and be ready to move up to a standing committee if funds were made available in the future.

Mayor Payton asked staff to bring back an item in the future to make the Spaceport Development Corporation a subcommittee of the airport board.

Council Member Ladd moved to appoint John Norman as Council Liaison to the Parks & Recreation Commission; seconded by Council Member Blong. The motion carried by the following vote: AYE: Blong, Trost, Robnett, Payton, Dufford, Ladd, Norman. NAY: None. ABSTAIN: None. ABSENT: None.

Council Member Ladd moved to appoint Suzanna Prucka to the Parks & Recreation Commission to replace Jack Ladd; seconded by Council Member Trost. The motion carried by the following vote: AYE: Blong, Trost, Robnett, Payton, Dufford, Ladd, Norman. NAY: None. ABSTAIN: None. ABSENT: None.

Council Member Norman moved to appoint Lynn Rogers Stralow to the Parks & Recreation Commission; seconded by Council Member Robnett. The motion carried by the following vote: AYE: Blong, Trost, Robnett, Payton, Dufford, Ladd, Norman. NAY: None. ABSTAIN: None. ABSENT: None.

DRAFT

EXECUTIVE SESSION

Mayor Payton recessed the meeting to go to Executive Session at 10:59 a.m.

29. Pursuant to Texas Government Code §551.101, the Council will hold an Executive Session which is closed to the public to discuss the following matters as permitted under the following Texas Government Code Sections:

    a. Section 551.072, Deliberation Regarding Real Property

        a.1. Discuss the purchase, exchange, lease, or value of real property described as an 11.72-acre tract located in Section 13, Block 39, T-1-S, T&P RR Co. Survey, City and County of Midland, Texas.

All the business at hand having been completed, the meeting adjourned at 11:45 a.m.

PASSED AND APPROVED the 28th day of April 2020.

_____
Patrick Payton, Mayor

ATTEST:

_____
Amy M. Turner, City Secretary

DRAFT

City Council Agenda

Approved for Agenda:
mwilliams
City Manager's Office

MEETING DATE: 4/28/2020

TO: City Council / City Manager

FROM: Erika Munoz, Purchasing Manager

SUBJECT: Consider a resolution awarding a contract for the Fire Station 5 Project (900307) and Fire Station 11, Fueling Station and Wash Bay Project (900335) to MW Builders, Inc., for a total cost of $10,899,500.00; approving $369,295.45 in contingencies; and allocating a total combined amount of $11,424,304.75 for said projects; for the General Services Department.

Purpose:

Approval of a resolution awarding a contract for the Fire Station 5 Project (900307) and Fire Station 11, Fueling Station and Wash Bay Project (900335) to MW Builders, Inc. for a cost of $10,899,500.00 plus $369,295.45 in contingencies; and $227,909.30 for construction material testing, fixtures, furnishings and equipment for a project cost of $11,496,704.75; and appropriating $11,424,304.75 therefore. $72,400.00 is already available in the Fire Station 5 Project (900307).

Recommended City Council Action

☒ Approve ☐ Deny ☐ Directional / Informational

Fiscal Impact:

Funds to be appropriated to the Fire Station 5 & 11 Projects:	
$1,500,000.00	Facilities Services 001041
$9,000,000.00	Certificates of Obligation
$875,000.00	Vehicle Services 750751
$72,400.00	Project 900307-005 Demolition of Fire Station 5
$49,304.75	Project 900256-005 Demolition of Building of the Southwest
$11,496,704.75	Total Appropriation

Discussion:

Resolution 2018-436 awarded a professional services agreement to Martinez Architects, LP for professional architectural and engineering services for the demolition and redesign of Fire Station Five (5) and the design of Fire Station Eleven (11) which included a fueling

station and wash bay to be located at the Fire Station eleven (11) site. The former Fire Station Five (5) facility was demolished in December 2019.

Motion 007-2020 approved the plans and specifications prepared by Martinez Architects, LP and authorized the advertisement of a request for proposals for the construction of Fire Station Five (5) and Fire Station Eleven (11) including a fueling station and wash bay. Contractors were requested to provide bids for three (3) options:

1. Base Bid for Fire Stations 5 and 11 only
2. Alternate Bid 1 for Fire Stations 5 and 11 and the fueling station
3. Alternate Bid 2 for Fire Stations 5 and 11, the fueling station and the wash bay.

Notice for the request for proposals was sent to eighty-two (82) contractors and we received four (4) proposals. Although Henthorn Commercial Construction appeared to be the low bidder, MW Builders, Inc. received the highest score. All proposals received were more than the estimated cost of $9,455,000.00. See attached tabulation and score sheets.

Staff is recommending that we award the base bid and the two (2) alternates for the reasons stated below:

1. Fire Station Five (5) has been demolished and needs to be replaced.
2. The property conveyed to the City for the Fire Station Eleven (11) site, located on the corner of Golden Gate Road and Briarwood Avenue, has a condition to conveyance that states if Grantee has not commenced or is not diligently pursuing efforts to complete construction within six (6) years of the initial term (July 1, 2015) then the property reverts back to the Grantor.
3. As the City grows, we need another fire station and satellite fueling station in northwest Midland.
4. All City owned vehicles will be able to use this fueling station and the wash bay. This should help reduce the mileage/hours and wear and tear on vehicles assigned to the northwest side of Midland because they would not have to go to the downtown fueling station to re-fuel.

After negotiating with MW Builders, Inc. about where we could use value engineering to reduce the cost of the project but keep the project basically intact, staff is recommending that we award a contract to MW Builders, Inc. for the base bid and the two (2) alternates. See cost breakdown below:

Fire Stations 5 & 11 with Fueling Station and Wash Bay	
$11,707,000.00	Base Bid for Fire Stations 5 & 11 with Fueling Station & Wash Bay
-$807,500.00	Value Engineering
=$10,899,500.00	Sub-Total
+$369,295.45	Construction Contingencies
=$11,268,795.45	Contractor Cost
+$227,909.30	Construction Material Testing and Fixtures, Furnishings & Equipment
$11,496,704.75	Total Funding Required

Therefore, please consider a resolution awarding a contract to MW Builders, Inc. of Midland, Texas for the construction of Fire Station five (5), Fire Station eleven (11), a fueling station and a wash bay for a cost of $10,899,500.00 plus $369,295.45 in contingencies; and $227,909.30 for construction material testing, fixtures, furnishings and equipment for a project cost of $11,496,704.75; and appropriating $11,424,304.75 therefore. $72,400.00 is already available in the Fire Station 5 Project (900307).

MIDLAND Fire Department

Interoffice Memorandum

Date: **04/08/2020**

To: **Regina Stephenson**

From: **Fire Chief Charles Blumenauer**

Subject: **MW Builders Fire Stations 5 and 11 Support Memo**

I am writing to express my support for awarding the Fire Station 5 and Fire Station 11 construction bids to MW Builders. After opening of initial bids, we entered a value engineering (VE) phase with MW Builders to help lower the costs of the construction of these two facilities. MW Builders willingness, actually started on VE phase before we contacted them, to work with the City on getting the most out of our budgeted money makes me confident that they are the best contractor for the Fire Department and the City.

RESOLUTION NO. _____

RESOLUTION AWARDING A CONTRACT FOR THE FIRE STATION 5 PROJECT (900307) AND FIRE STATION 11, FUELING STATION AND WASH BAYS PROJECT (900335) TO MW BUILDERS, INC., FOR A TOTAL COST OF $10,899,500.00; APPROVING $369,295.45 IN CONTINGENCIES; AND ALLOCATING A TOTAL COMBINED AMOUNT OF $11,424,304.75 FOR SAID PROJECTS

WHEREAS, Motion 007-2020 approved plans and specifications and authorized a request for proposals for the construction of Fire Station 5 and Fire Station 11 for the General Services Department; and

WHEREAS, four (4) proposals were opened on February 28, 2020, with the most advantageous proposal being submitted by MW Builders, Inc., for a total cost of $10,899,500.00, as shown on the bid tabulation attached hereto as Exhibit A and incorporated herein for all purposes; and

WHEREAS, the City Council finds the cost proposed by MW Builders, Inc., to be fair and reasonable; and

WHEREAS, the City Council finds it to be in the public interest to award a contract to MW Builders, Inc., for the Fire Station 5 Project and the Fire Station 11, Fueling Station and Wash Bays Project; and

WHEREAS, the City Council finds it to be in the public interest to approve $369,295.45.00 for contingencies; and

WHEREAS, the City Council finds it to be in the public interest to appropriate a combined total of $11,424,304.75 for said projects;

NOW, THEREFORE, BE IT RESOLVED BY THE CITY COUNCIL OF THE CITY OF MIDLAND, TEXAS:

SECTION ONE. That the City Manager and City Secretary are hereby authorized and directed to execute and attest, respectively, on behalf of the City of Midland, a contract with MW Builders, Inc., for said projects for a total cost of $10,899,500.00. Said contract to

be kept on file in the office of the City Secretary, referenced by the date and number of this Resolution.

SECTION TWO. That the sum of $369,295.45 for contingencies is hereby approved for said contract.

SECTION THREE. That the sum of $4,852,287.48 is hereby allocated to the Fire Station 5 Project (900307) from the following sources:

- $4,500,000.00 from CO 2019 Bond; and
- $352,287.48 from the Facilities Division of General Services (001041).

SECTION FOUR. That the sum of $6,572,017.27 is hereby allocated to the Fire Station 11, Fueling Station and Wash Bays Project (900335) from the following sources:

- $49,304.75 from Project #900256;
- $4,500,000.00 from CO 2020 Bond;
- $875,000.00 from the Vehicle Services Division of the Garage Department (750751); and
- $1,147,712.52 from the Facilities Division of General Services (001041).

SECTION FIVE. That the City Comptroller is hereby authorized and directed to pay MW Builders, Inc., for said projects and contingencies pursuant to the terms of the above-referenced contract from funds available in the Fire Station 5 Project (900307) and the Fire Station 11, Fueling Station and Wash Bays Project (900335) upon receipt of proper invoices or statements approved by the City Manager.

On motion of Council member _____, seconded by Council member _____, the above and foregoing resolution was adopted by the City Council of the City of Midland at a regular meeting on the _____ day of _____, A.D., 2020, by the following vote:

Council members voting "AYE":

Council members voting "NAY":

_____
Patrick N. Payton, Mayor

ATTEST:

_____
Amy M. Turner, City Secretary

RECOMMENDED AND APPROVED:

_____
Courtney Sharp, City Manager

APPROVED AS TO CONTENT
AND COMPLETENESS:

_____
Regina Stephenson, General Services Director

APPROVED ONLY AS TO FORM:

_____
John Ohnemiller, City Attorney

Point Tabulation - Evaluation of Fee (Base Bid)							
General Contractor	**Bid Bond?**	**Addenda**	**Station 5**	**Station 11**	**Total Base Bid**	**Points Available**	**Points Awarded**
Henthorn Commercial Construction	Yes	5 of 5	$ 4,875,000.00	$ 5,620,000.00	$ 10,495,000.00	40	40.00
MW Builders	Yes	5 of 5	$ 5,050,000.00	$ 5,617,000.00	$ 10,667,000.00	40	39.34
JC Roberts Construction	Yes	5 of 5	$ 5,362,000.00	$ 5,995,000.00	$ 11,357,000.00	40	36.71
Cooper Construction	No	4 of 5	$ 5,790,000.00	$ 6,700,000.00	$ 12,490,000.00	40	32.40

Point Tabulation - Evaluation of Fee (Base Bid + Alternate #1)							
General Contractor	**Bid Bond?**	**Addenda**	**Base Bid**	**Alternate #1**	**Total (with Alt. #1)**	**Points Available**	**Points Awarded**
Henthorn Commercial Construction	Yes	5 of 5	$ 10,495,000.00	$ 385,000.00	$ 10,880,000.00	40	40.00
MW Builders	Yes	5 of 5	$ 10,667,000.00	$ 630,000.00	$ 11,297,000.00	40	38.47
JC Roberts Construction	Yes	5 of 5	$ 11,357,000.00	$ 790,000.00	$ 12,147,000.00	40	35.34
Cooper Construction	No	4 of 5	$ 12,490,000.00	$ 520,000.00	$ 13,010,000.00	40	32.17

Point Tabulation - Evaluation of Fee (Base Bid + Alternate #1 + Alternate #2)							
General Contractor	**Bid Bond?**	**Addenda**	**Base Bid**	**Alternate #1 & #2**	**Total (with Alts. #1 & #2)**	**Points Available**	**Points Awarded**
Henthorn Commercial Construction	Yes	5 of 5	$ 10,495,000.00	$ 775,000.00	$ 11,270,000.00	40	40.00
MW Builders	Yes	5 of 5	$ 10,667,000.00	$ 1,040,000.00	$ 11,707,000.00	40	36.96
JC Roberts Construction	Yes	5 of 5	$ 11,357,000.00	$ 1,285,000.00	$ 12,642,000.00	40	33.52
Cooper Construction	No	4 of 5	$ 12,490,000.00	$ 1,360,000.00	$ 13,850,000.00	40	29.08

Exhibit A

Point Tabulation - Evaluation of Safety Experience						
General Contractor	**ON-Staff Safety Coordinator**	**EMR Rating**	**Points per EMR Rating**	**Safety Program (Good/Fair/Poor)**	**Points Available**	**Points Awarded**
Henthorn Commercial Construction	0	0.17	2	2	5	**4**
MW Builders	0	0.61	2	2	5	**4**
JC Roberts Construction	0	0.91	0	2	5	**2**
Cooper Construction	0	1.35	0	1	5	**1**

Point Tabulation - Evaluation of General Contractor Experience			
General Contractor	**Project Type Experience**	**Total Points Available**	**Points Awarded**
Henthorn Commercial Construction	4	20	11
MW Builders	7	20	14
JC Roberts Construction	5	20	11
Cooper Construction	6	20	14

Point Tabulation - Evaluation of References				
General Contractor	**References Completed**	**References Good/Fair/Poor**	**Total Points Available**	**Points Awarded**
Henthorn Commercial Construction		5	10	5
MW Builders		10	10	10
JC Roberts Construction		10	10	10
Cooper Construction		0	10	0

Point Tabulation - Evaluation of Proposed Personnel Experience

General Contractor	# of Projects per Personnel	Relevant Project Experience	Points Available	Points Awarded
Henthorn Commercial Construction	Est: 0 / PM: 1 / Super: 1	2	20	7
MW Builders	Est: 4 / PM: 5 / Super: 0	9	20	17
JC Roberts Construction	Est: 0 / PM: 0 / Super: 1	1	20	3
Cooper Construction	Est: 0 / PM: 1 / Super: 0	1	20	3

Point Tabulation - Evaluation of Other Factors

General Contractor	Presentation	Other Factors	Points Available	Points Awarded
Henthorn Commercial Construction	2	1	5	3
MW Builders	3	2	5	5
JC Roberts Construction	1	0	5	1
Cooper Construction	0	0	5	0

Fire Stations No. 5 and 11
City of Midland

Bid Date: February 28, 2020
CSP TABULATION SUMMARY

General Contractor	Safety	Fee	Contractor Experience	References	Proposed Personnel	Other Factors	Interview	Total
Point Value	5	40	20	10	20	5	25	**125**
Henthorn Commercial Construction	4	40.00	11	5	7	3		**70.00**
MW Builders	4	36.96	14	10	17	5		**86.96**
JC Roberts Construction	2	33.52	11	10	3	1		**60.52**
Cooper Construction	1	29.08	14	0	3	0		**47.08**

April 3, 2020

Ms. Regina Stephenson
City of Midland
300 N. Loraine
Midland, Texas 79702

RE: Recommendation of General Contractor for Construction of Fire Stations 5 & 11

Ms. Stephenson,

We have reviewed and scored the proposals submitted for the construction of Fire Stations 5 & 11. Based on the attached Scoring Tabulation, MW Builders is the highest-scoring Respondent. We therefore recommend the City enter into contract negotiations with MW Builders for this project.

This recommendation is based on the scoring of the submittals received, in accordance with the published scoring criteria established by the Request for Competitive Sealed Proposals (CSP). As the highest-scoring Respondent, MW Builders is recognized as the Respondent able to provide the best value to the City, despite not being the lowest bidder.

In addition to their submitted Proposal, MW Builders also voluntarily submitted a suggested Value Engineering (V.E.) List, which was emailed to me on bid day. The list includes suggested modifications to the design specifications to deliver the project generally as intended, but with cost savings. This willingness to work toward to cost reduction will be valuable as the City works toward funding this project.

The attached Tabulation is organized to match the Selection Criteria issued with the RFP, as follows:

1) Safety Experience
   - Based on EMR Rating and evaluation of information submitted about the proposer's Safety Program.

2) Fee Proposal
   - The Fee tabulation is broken down into three separate spreadsheets: one for Base Bid, one including Alternate 1, and one including both Alternates. For the summary Tabulation, we are referencing the Tabulation including both Alternates.

3) Contractor Experience
   - Based on the total number of relevant projects listed by each Respondent. Projects needed to meet the following to be considered relevant by our evaluation:
     i. Project was for Government entity (City, County, etc.)
     ii. Project was of sufficient size (at least $1 million construction cost)
     iii. Building type was relevant to Public Safety, Emergency Response, or other similar building type.
     iv. Projects were local to the west-Texas region

4) References
   - All references that we were able to contact were positive for all Respondents.
   - Cooper received zero (0) because they did not provide any contact information for their references.
   - Henthorn received five (5) because they did not provide Company references, only references for two of their proposed personnel. Of those, none were owner references from past clients, as was requested.

5) Experience of Proposed Personnel
   - Based on the total number of relevant projects each Respondent listed under each assigned personnel. Projects needed to meet the following to be considered relevant by our evaluation:
     i. Project was for Government entity (City, County, etc.)
     ii. Project was of sufficient size (at least $1 million construction cost)

iii. Building type was relevant to Public Safety, Emergency Response, or other similar building type.
iv. Projects were local to the west-Texas region

6) Other Factors
   - Presentation: Overall completeness and clarity of material submitted.
   - Other Factors: Did the Respondent submit any unique and applicable qualifying information?

7) Summary Tabulation of the six (6) scored categories, listed above.

In your review of the attached scoring tabulation, please note that the overall scoring on the final page is calculated using the combined bid amounts of the base bid + both bid alternates. Were the City to decline either or both bid alternates, MW Builders would still be the highest-scoring proposer.

Please contact me with if any additional information is needed.

Sincerely,

Justin Myers, Partner
Martinez Architects

Point Tabulation - Evaluation of Fee (Base Bid)

General Contractor	Bid Bond?	Addenda	Station 5	Station 11	Total Base Bid	Points Available	Points Awarded
Henthorn Commercial Construction	Yes	5 of 5	$ 4,875,000.00	$ 5,620,000.00	$ 10,495,000.00	40	40.00
MW Builders	Yes	5 of 5	$ 5,050,000.00	$ 5,617,000.00	$ 10,667,000.00	40	39.34
JC Roberts Construction	Yes	5 of 5	$ 5,362,000.00	$ 5,995,000.00	$ 11,357,000.00	40	36.71
Cooper Construction	No	4 of 5	$ 5,790,000.00	$ 6,700,000.00	$ 12,490,000.00	40	32.40

Point Tabulation - Evaluation of Fee (Base Bid + Alternate #1)

General Contractor	Bid Bond?	Addenda	Base Bid	Alternate #1	Total (with Alt. #1)	Points Available	Points Awarded
Henthorn Commercial Construction	Yes	5 of 5	$ 10,495,000.00	$ 385,000.00	$ 10,880,000.00	40	40.00
MW Builders	Yes	5 of 5	$ 10,667,000.00	$ 630,000.00	$ 11,297,000.00	40	38.47
JC Roberts Construction	Yes	5 of 5	$ 11,357,000.00	$ 790,000.00	$ 12,147,000.00	40	35.34
Cooper Construction	No	4 of 5	$ 12,490,000.00	$ 520,000.00	$ 13,010,000.00	40	32.17

Point Tabulation - Evaluation of Fee (Base Bid + Alternate #1 + Alternate #2)

General Contractor	Bid Bond?	Addenda	Base Bid	Alternate #1 & #2	Total (with Alts. #1 & #2)	Points Available	Points Awarded
Henthorn Commercial Construction	Yes	5 of 5	$ 10,495,000.00	$ 775,000.00	$ 11,270,000.00	40	40.00
MW Builders	Yes	5 of 5	$ 10,667,000.00	$ 1,040,000.00	$ 11,707,000.00	40	36.96
JC Roberts Construction	Yes	5 of 5	$ 11,357,000.00	$ 1,285,000.00	$ 12,642,000.00	40	33.52
Cooper Construction	No	4 of 5	$ 12,490,000.00	$ 1,360,000.00	$ 13,850,000.00	40	29.08

Point Tabulation - Evaluation of Safety Experience						
General Contractor	**ON-Staff Safety Coordinator**	**EMR Rating**	**Points per EMR Rating**	**Safety Program (Good/Fair/Poor)**	**Points Available**	**Points Awarded**
Henthorn Commercial Construction	0	0.17	2	2	5	**4**
MW Builders	0	0.61	2	2	5	**4**
JC Roberts Construction	0	0.91	0	2	5	**2**
Cooper Construction	0	1.35	0	1	5	**1**

Point Tabulation - Evaluation of General Contractor Experience			
General Contractor	**Project Type Experience**	**Total Points Available**	**Points Awarded**
Henthorn Commercial Construction	4	20	11
MW Builders	7	20	14
JC Roberts Construction	5	20	11
Cooper Construction	6	20	14

Point Tabulation - Evaluation of References				
General Contractor	**References Completed**	**References Good/Fair/Poor**	**Total Points Available**	**Points Awarded**
Henthorn Commercial Construction		5	10	5
MW Builders		10	10	10
JC Roberts Construction		10	10	10
Cooper Construction		0	10	0

Point Tabulation - Evaluation of Proposed Personnel Experience

General Contractor	# of Projects per Personnel	Relevant Project Experience	Points Available	Points Awarded
Henthorn Commercial Construction	Est: 0 / PM: 1 / Super: 1	2	20	7
MW Builders	Est: 4 / PM: 5 / Super: 0	9	20	17
JC Roberts Construction	Est: 0 / PM: 0 / Super: 1	1	20	3
Cooper Construction	Est: 0 / PM: 1 / Super: 0	1	20	3

Point Tabulation - Evaluation of Other Factors

General Contractor	Presentation	Other Factors	Points Available	Points Awarded
Henthorn Commercial Construction	2	1	5	3
MW Builders	3	2	5	5
JC Roberts Construction	1	0	5	1
Cooper Construction	0	0	5	0

Fire Stations No. 5 and 11
City of Midland

Bid Date: February 28, 2020
CSP TABULATION SUMMARY

General Contractor	Safety	Fee	Contractor Experience	References	Proposed Personnel	Other Factors	Interview	Total
Point Value	5	40	20	10	20	5	25	**125**
Henthorn Commercial Construction	4	40.00	11	5	7	3		**70.00**
MW Builders	4	36.96	14	10	17	5		**86.96**
JC Roberts Construction	2	33.52	11	10	3	1		**60.52**
Cooper Construction	1	29.08	14	0	3	0		**47.08**

THE CITY OF MIDLAND

CONTRACT

Contract No. 20002150

THIS CONTRACT, effective the 29th day of April, 2020, by and between the City of Midland, hereinafter referred to as "City", and MW Builders, Inc., hereinafter referred to as "Company", is made for the following considerations:

1. **Cost:** Total Proposal: $ 10,899,500.00 DOLLARS

2. **Scope of Work:** Company shall perform all work described for construction of Fire Stations 5 & 11, a fueling station and wash bay as described in the following documents, attached hereto and incorporated herein by reference for all legal purposes.

EXHIBIT A..... List of Drawings and Specifications
EXHIBIT B.1 & B.2 .....Proposal Form and Approved Value Engineering
EXHIBIT C..... Bonding instructions for Public Works Contract of $50,000 and more
EXHIBIT D..... Wage Scale

3. **City:** The words "City's Representative" or "representative" shall mean Charles Blumenauer or the designee under whose supervision these contract documents, including the plans and specifications, were prepared, or who may inspect work performed under this Contract; or such other representative, supervisor, or inspector as may be authorized by City to act in any particular capacity under this Contract.

4. **City's Representative:** City's Representative may make periodic visits to the site to observe the progress and quality of the executed work and to determine, in general, if the work is proceeding in accordance with the contract documents. City's representative will not be required to make exhaustive or continuous on-site inspections to check the quality or quantity of the work, nor will such representative be responsible for the construction means, methods, techniques, sequences or procedures, or the safety precautions incident thereto. City's representative will not be responsible for Company's failure to perform the work in accordance with the contract.

5. **Company:** Unless otherwise stipulated, Company shall provide and pay for all materials, supplies, machinery, equipment, tools, superintendence, labor, insurance, and all water, light, power, fuel,

transportation and all other facilities necessary for the execution and completion of the work covered by the contract documents. Unless otherwise specified, all materials shall be new, and both workmanship and materials shall be of a good quality. Company shall, if required, furnish satisfactory evidence as to the kind and quality of materials.

5.1. Company shall, at its expense, obtain all permits and licenses necessary for the performance of this contract and pay all fees and taxes required by law, and comply with all laws, ordinances, rules and regulations governing Company's performance of the contract, including all environmental laws and regulations, whether state or federal.

5.2. All work shall be done and all materials furnished in strict conformity with the contract and specifications.

6. **Minor Work Not Mentioned:** All minor detail of the work not specifically mentioned in the Specifications but obviously necessary for the proper completion of the work, such as the proper connection of new work to old, shall be considered as incidental to and a part of the work for which the prices are named in the contract. Company will not be entitled to any additional compensation therefor unless specifically stated otherwise. Otherwise the term "extra work" as used in this contract shall mean and include all work that may be required by City to be done by Company to accomplish any alteration or addition to the work as shown on the Specifications.

6.1. Company shall perform all extra work under the direction of City's Representative when presented with a written work order signed by City's Representative, subject, however, to the right of the Company to require written confirmation of such extra work order by City. Payment for extra work shall be as agreed in the work order.

7. **Safety:** Company shall at all times exercise reasonable precaution for the safety of employees and others on or near the work and shall comply with all applicable provisions of federal, state and municipal laws. All machinery and equipment and other physical hazards shall be guarded in accordance with federal, state or municipal laws or regulations.

8. **INDEMNITY: COMPANY SHALL INDEMNIFY AND HOLD HARMLESS AND DEFEND CITY AND ALL OF CITY'S OFFICERS, AGENTS AND EMPLOYEES FROM ALL SUITS, ACTIONS, CLAIMS, DAMAGES, PERSONAL INJURIES, ACCIDENTAL DEATH, LOSSES, PROPERTY DAMAGE AND EXPENSES OF ANY CHARACTER WHATSOEVER, INCLUDING ATTORNEY'S FEES, BROUGHT FOR OR ON ACCOUNT OF ANY INJURIES OR DAMAGES RECEIVED OR SUSTAINED BY ANY PERSON OR PERSONS OR**

PROPERTY, ON ACCOUNT OF ANY NEGLIGENT ACT OF COMPANY, THEIR AGENTS OR EMPLOYEES, OR ANY SUBCONTRACTOR, IN THE EXECUTION, SUPERVISION AND OPERATIONS GROWING OUT OF OR IN ANY WAY CONNECTED WITH THE PERFORMANCE OF THIS CONTRACT, AND COMPANY WILL BE REQUIRED TO PAY ANY JUDGMENT WITH COSTS WHICH MAY BE OBTAINED AGAINST CITY OR ANY OF ITS OFFICERS, AGENTS OR EMPLOYEES, INCLUDING ATTORNEY'S FEES.

8.1. **COMPANY SHALL INDEMNIFY AND HOLD HARMLESS AND DEFEND CITY AND ALL OF CITY'S OFFICERS, AGENTS AND EMPLOYEES FROM ALL SUITS, ACTIONS, CLAIMS, DAMAGES, PERSONAL INJURIES, ACCIDENTAL DEATH, PROPERTY DAMAGE, LOSSES, AND EXPENSES OF ANY CHARACTER WHATSOEVER INCLUDING ATTORNEY'S FEES, BROUGHT FOR OR ON ACCOUNT OF ANY INJURIES OR DAMAGES RECEIVED OR SUSTAINED BY ANY PERSON OR PERSONS OR PROPERTY, ON ACCOUNT OF ANY NEGLIGENT ACT OF CITY, CITY'S OFFICERS, AGENTS AND EMPLOYEES, WHETHER SUCH NEGLIGENT ACT WAS THE SOLE PROXIMATE CAUSE OF THE INJURY OR DAMAGE OR A PROXIMATE CAUSE JOINTLY AND CONCURRENTLY WITH COMPANY OR COMPANY'S EMPLOYEES, AGENTS OR SUBCONTRACTORS NEGLIGENCE IN THE EXECUTION, SUPERVISION AND OPERATIONS GROWING OUT OF OR IN ANY WAY CONNECTED WITH THE PERFORMANCE OF THIS CONTRACT, AND COMPANY WILL BE REQUIRED TO PAY ANY JUDGMENT WITH COSTS WHICH MAY BE OBTAINED AGAINST CITY OR ANY OF ITS OFFICERS, AGENTS OR EMPLOYEES, INCLUDING ATTORNEY'S FEES.**

8.2. **COMPANY AGREES THAT IT WILL INDEMNIFY AND SAVE CITY HARMLESS FROM ALL CLAIMS GROWING OUT OF ANY DEMANDS OF SUBCONTRACTORS, LABORERS, WORKMEN, MECHANICS, MATERIALMEN, AND FURNISHERS OF MACHINERY AND PARTS THEREOF, EQUIPMENT, POWER TOOLS AND ALL SUPPLIES, INCURRED IN THE FURTHERANCE OF THE PERFORMANCE OF THIS CONTRACT. WHEN CITY SO DESIRES, COMPANY SHALL FURNISH SATISFACTORY EVIDENCE THAT ALL OBLIGATIONS OF THE NATURE HEREINABOVE DESIGNATED HAVE BEEN PAID, DISCHARGED OR WAIVED. COMPANY, ITS SURETIES AND INSURANCE CARRIERS SHALL DEFEND, INDEMNIFY AND SAVE HARMLESS CITY AND ALL OF ITS OFFICERS, AGENTS AND EMPLOYEES FROM ALL SUITS, ACTIONS, OR CLAIMS OF ANY CHARACTER WHATSOEVER, BROUGHT FOR OR ON ACCOUNT OF ANY INJURIES OR DAMAGES RECEIVED OR SUSTAINED BY ANY PERSON OR PERSONS OR**

PROPERTY, ARISING FROM ANY ACT OF COMPANY OR ANY SUBCONTRACTOR, THEIR AGENTS OR EMPLOYEES, IN THE EXECUTION AND SUPERVISION OF THIS CONTRACT, AND WILL BE REQUIRED TO PAY ANY JUDGMENT WITH COSTS WHICH MAY BE OBTAINED AGAINST CITY OR ANY OF ITS OFFICERS, AGENTS, OR EMPLOYEES INCLUDING ATTORNEY'S FEES.

9. **Start of Work:** Company shall commence work no later than ten (10) days after receipt of the execution of this document or other written release to proceed and shall complete such work no later than 365 calendar days after release to proceed. Commencement and/or written release to proceed shall not precede the receipt of building permits for the work.

10. **Clean Up:** Company shall promptly remove from City's premises all materials condemned by City's Representative on account of failure to conform to the contract, whether actually incorporated in the work or not, and Company shall at its own expense promptly replace such condemned materials with other materials conforming to the requirements of the contract. Company shall also bear the expense of restoring all work of other contractors damaged by any such removal or replacement. If Company does not remove and replace any such condemned materials within a reasonable time after a written notice by City, City may remove and replace such at Company's expense.

11. **Warranty:** Neither the final payment nor any provision in this contract shall relieve Company of responsibility for faulty materials or workmanship, and he shall remedy any defects due thereto and pay for any damage to other work resulting therefrom, which shall appear within a period of one (1) year from the date of substantial completion. City shall give notice of observed defects with reasonable promptness.

12. **Remedy:** City may, on account of subsequently discovered evidence, withhold whole or part of any payment to such extent as may be necessary to protect itself from loss on account of:

12.1. Defective work not remedied; or

12.2. Claims filed or reasonable evidence indicating possible filing of claims; or

12.3. Failure of Company to make payments promptly to subcontractors or for material or labor which City may pay as an agent for the Company; or

12.4. Damages to another contractor or subcontractor.

When the above grounds to withhold payment are removed, or Company provides a surety bond satisfactory to City, which will protect City in the amount withheld, payment may be released.

13. **Funding Out:** In the event no funds or insufficient funds are appropriated and budgeted or are

otherwise unavailable in any fiscal period for contract payments due under the contract, then this contract shall terminate on the last day of the fiscal period for which full appropriations were made, without penalty or expense to City of any kind whatsoever.

14. **Wage Scale:** Company agrees to pay all workmen in his employ no less than the generally prevailing wage rate for employees of similar category in the Permian Basin Area, as is depicted in the wage rate scale attached hereto as EXHIBIT D, and incorporated herein by reference for all legal purposes.

14.1. If applicable, the Davis-Bacon Act, 29 CFR 5.5, and any related acts or regulations are hereby incorporated by reference and made a part of this Contract, and all terms and requirements under said laws, by such incorporation, are made terms and requirements of this Contract, to which the parties to this Contract have agreed to be bound.

15. **Prompt Pay Act:** City and Company agree that Texas Government Code, Chapter 2251, Payment for Goods and Services (the "Prompt Pay Act") does not waive governmental immunity.

16. **Payment; Retainage:** After all work is completed by Company, including all Change Orders altering the original scope and amount of the contract are completed, and the City has inspected and approved that the work is completed and in compliance with the contract and all subsequent Change Orders, the City may thereafter issue payment to Company in the amount of the contract and all Change Orders. The City shall be the final judge of when the work is completed by Company. The City, in its sole discretion, shall determine if the work under the contract and under any Change Orders has been done to the City's requirements.

16.1. The City may make periodic payments to Company; provided, however, such periodic payments may only be made pursuant to this section, and only after all work and all Change Orders are completed by Company and approved by the City. The approval shall be in the City's sole discretion. Requests for progress payments may be made to the extent of the materials and labor completed at the end of each month. Upon approval by the City or the City's representative, the request and invoice shall be forwarded for payment less 5% retainage. The total of these payments shall not exceed 95% of the total contract amount.

17. **Late Completion; Liquidated Damages:** It is hereby understood and mutually agreed, by and between Company and the City, that the date of beginning and the time for completion as specified in the contract of the work to be done hereunder are ESSENTIAL CONDITIONS of this contract; and it is further mutually understood and agreed that the work embraced in this contract shall be commenced on a date to be specified in the "Notice to Proceed." Company agrees that said work shall be prosecuted

regularly, diligently, and uninterruptedly at such rate of progress as will insure full completion thereof within the time specified. It is expressly understood and agreed, by and between Company and the City, that the time for the completion of the work described herein is a reasonable time for the completion of the same, taking into consideration the average climatic range and usual industrial conditions prevailing in this locality.

17.1. In the event Company shall neglect, fail or refuse to complete the work within the time herein specified, or any proper extension thereof granted by the City, then Company and Company's surety, if any, shall be liable for and does hereby agree, as a part consideration for the awarding of this contract, to pay to the City $500.00, not as a penalty but as liquidated damages for such breach of contract as hereinafter set forth, for each and every day that Company shall be in default after the time stipulated in the contract for completing the work. Further, the City shall have the right to cancel this contract for such delay. In the event the City cancels this contract pursuant to the terms of this section, the City shall pay to Company only those monies deemed appropriate by the City, in its sole discretion, to compensate Company for any work actually performed, less any liquidated damages Company owes the City.

17.2. The said amount is fixed and agreed upon by and between Company and the City because of the impracticability and extreme difficulty of fixing and ascertaining the actual damages the City would in such event sustain, and said amount is agreed to be the amount of damages which the City would sustain and said amount shall be retained from time to time by the City from current periodical estimates.

17.3. It is further agreed that time is of the essence of each and every portion of this contract and of the specifications wherein a definite and certain length of time is fixed for the performance of any act whatsoever; and where under the contract an additional time is allowed for the completion of any work, the new time limit fixed by such extension shall be of the essence of this contract. Provided, that Company shall not be charged with liquidated damages or any excess cost when the City determines, in its sole discretion, that Company is without fault and Company's reasons for the time extension are acceptable to the City. Provided, further, that Company shall not be charged with liquidated damages of any excess cost when the delay in completion of the work is due:

a. To any preference, priority or allocation order duly issued by the Government;

b. To unforeseeable cause beyond the control and without the fault or negligence of Company, including, but not restricted to, acts of God, or of the public enemy, acts of the City, acts of another contractor in the performance of a contract with the City, fires, floods, epidemics, quarantine restrictions, strikes, freight embargoes, and severe weather; and

c. To any delays of subcontractors or suppliers occasioned by any of the causes specified in subsections (a) and (b) of this article.

17.4. Provided, further, that Company shall, within ten (10) days from the beginning of such delay, unless the City shall, in its sole discretion grant a further period of time prior to the date of final settlement of the contract, notify the City, in writing, of the causes of the delay, who shall ascertain the facts and extent of the delay and notify Company within a reasonable time of its decision in the matter.

17.5. **COMPANY AGREES THAT THE PAYMENT OF SUCH LIQUIDATED DAMAGES MAY BE RECOVERED BY THE CITY FROM RETAINAGE HELD BY THE CITY. NOTWITHSTANDING ANY OTHER PROVISION HEREOF, COMPANY HEREBY RELEASES, ACQUITS, RELINQUISHES AND FOREVER DISCHARGES CITY, CITY'S EMPLOYEES AND OFFICERS FROM ANY AND ALL DEMANDS, CLAIMS, DAMAGES, OR CAUSES OF ACTION OF ANY KIND WHATSOEVER ARISING FROM THE CITY RIGHTFULLY WITHHOLDING PAYMENT FROM COMPANY AS LIQUIDATED DAMAGES FOR COMPANY'S FAILURE TO COMPLETE THE WORK WITHIN THE TIME SPECIFIED HEREIN, INCLUDING BUT NOT LIMITED TO BREACH OF CONTRACT, QUANTUM MERUIT, CLAIMS UNDER THE DUE PROCESS AND TAKINGS CLAUSES OF THE TEXAS AND UNITED STATES CONSTITUTIONS, TORT CLAIMS, OR CITY'S NEGLIGENCE.**

17.6. **COMPANY SHALL RECEIVE NO FINANCIAL COMPENSATION FOR DELAY OR HINDRANCE TO THE WORK. IN NO EVENT SHALL THE CITY BE LIABLE TO COMPANY OR ANY SUBCONTRACTOR OR SUPPLIER, ANY OTHER PERSON OR ANY SURETY FOR OR ANY EMPLOYEE OR AGENT OF ANY OF THEM, FOR ANY DAMAGES ARISING OUT OF OR ASSOCIATED WITH ANY DELAY OR HINDRANCE TO THE WORK, REGARDLESS OF THE SOURCE OF THE DELAY OR HINDRANCE, INCLUDING EVENTS OF FORCE MAJEURE, AND EVEN IF SUCH DELAY OR HINDRANCE RESULTS FROM, ARISES OUT OF OR IS DUE, IN WHOLE OR IN PART, TO THE NEGLIGENCE OF THE CITY. COMPANY'S SOLE REMEDY IN ANY SUCH CASE SHALL BE AN EXTENSION OF TIME.**

18. **No Third Party Beneficiary:** City's approval of this contract does not create a third party beneficiary. There is no third party beneficiary to this contract. No person or entity who is not a party to this contract shall have any third party beneficiary or other rights hereunder.

19. **WAIVER OF ATTORNEY FEES: BY EXECUTING THIS CONTRACT, COMPANY AGREES TO WAIVE AND DOES HEREBY KNOWINGLY, CONCLUSIVELY, VOLUNTARILY AND INTENTIONALLY WAIVE ANY CLAIM IT HAS OR MAY HAVE IN THE FUTURE AGAINST CITY, REGARDING THE AWARD OF ATTORNEY'S FEES, WHICH**

ARE IN ANY WAY RELATED TO THE CONTRACT, OR THE CONSTRUCTION, INTERPRETATION OR BREACH OF THE CONTRACT. COMPANY SPECIFICALLY AGREES THAT IF COMPANY BRINGS OR COMMENCES ANY LEGAL ACTION OR PROCEEDING RELATED TO THIS CONTRACT, THE CONSTRUCTION, INTERPRETATION, VALIDITY OR BREACH OF THIS CONTRACT, INCLUDING BUT NOT LIMITED TO ANY ACTION PURSUANT TO THE PROVISIONS OF THE TEXAS UNIFORM DECLARATORY JUDGMENTS ACT (TEXAS CIVIL PRACTICE AND REMEDIES CODE SECTION 37.001, ET SEQ., AS AMENDED), OR CHAPTER 271 OF THE TEXAS LOCAL GOVERNMENT CODE, COMPANY AGREES TO ABANDON, WAIVE AND RELINQUISH ANY AND ALL RIGHTS TO THE RECOVERY OF ATTORNEY'S FEES TO WHICH COMPANY MIGHT OTHERWISE BE ENTITLED.

COMPANY AGREES THAT THIS IS THE VOLUNTARY AND INTENTIONAL RELINQUISHMENT AND ABANDONMENT OF A PRESENTLY EXISTING KNOWN RIGHT. COMPANY ACKNOWLEDGES THAT IT UNDERSTANDS ALL TERMS AND CONDITIONS OF THE CONTRACT. COMPANY FURTHER ACKNOWLEDGES AND AGREES THAT THERE WAS AND IS NO DISPARITY OF BARGAINING POWER BETWEEN CITY AND COMPANY. THIS SECTION SHALL NOT BE CONSTRUED OR INTERPRETED AS A WAIVER OF GOVERNMENTAL IMMUNITY.

COMPANY AND CITY ARE RELYING ON THEIR OWN JUDGMENT. EACH PARTY HAD THE OPPORTUNITY TO DISCUSS THIS CONTRACT WITH COMPETENT LEGAL COUNSEL PRIOR TO ITS EXECUTION.

20. **Governmental Immunity:** By executing this contract City is not waiving its right of governmental immunity. City is retaining its immunity from suit. City is not granting consent to be sued by legislative resolution or action.

THERE IS NO WAIVER OF GOVERNMENTAL IMMUNITY.

21. **Insurance:**

Company shall at all times during the term of this Contract maintain and keep in full force and effect insurance in the following types and minimum amounts with companies authorized to do business in the State of Texas:

Commercial General Liability (including Contractual liability):

-Personal Injury: $1,000,000.00 per person

$1,000,000.00 per occurrence

-Property Damage:	$500,000.00 per occurrence
Business Automobile Liability:	$250,000.00 combined single limit - Personal Injury and Property Damage
Workers' Compensation:	Statutory limits
Employers' Liability:	$500,000.00 per accident or occurrence

The Commercial General Liability shall be on a per project aggregate, including completed operations, and shall be on a claims-occurred basis. This insurance shall name City as an additional insured and waive subrogation in favor of City.

The Business Automobile Liability insurance provided by Company shall cover any auto for bodily injury and property damage, including owned vehicles, hired and non-city vehicles, and employee non-ownership, and the amount of such policy shall be a minimum of $250,000.00 covering any vehicle used for the execution of the work that is the subject of this Contract. This insurance shall name City as an additional insured and waive subrogation in favor of City.

The Workers' Compensation coverage provided by Company shall inure to the benefit of employees injured during the course and scope of their employment by Company pursuant to this Contract. The Workers' Compensation shall waive all rights of subrogation in favor of City.

All insurance required pursuant to this Contract shall provide for a waiver of subrogation in favor of City. All insurance required pursuant to this Contract, except for Workers' Compensation Insurance, shall name City as an additional insured on a claims occurred basis. City shall be provided the notice by Company's insurance provider not later than thirty (30) days prior to any reduction or termination of such coverage.

Company shall contractually require all contractors, subcontractors, and sub-subcontractors that work on any portion of the work that is the subject of this Contract to obtain insurance coverage that meets or exceeds the policy requirements and minimum amounts specified herein. All contractors, subcontractors, and sub-subcontractors shall obtain insurance policies that provide blanket waivers of subrogation in favor of the City of Midland and policies that name the City of Midland as an additional insured on a claims occurred basis (except workers' compensation).

The parties agree that, prior to the execution of the Contract, Company shall provide one or more certificates of insurance specifically stating that these requirements have been met and subject to the approval of City. City shall not be required to provide any insurance whatsoever pursuant to this Contract.

Company certifies that the certificate of insurance provided as required herein complies with the requirements of Chapter 1811 of the Texas Insurance Code. Company shall not use an unapproved certificate of insurance or insert inappropriate language on a certificate. Compliance with state law is the sole responsibility of Company.

22. **Assignment**: Company shall not, either directly or indirectly, assign all or any part of this Contract or any interest, right or privilege herein, without the prior written consent of City. The issue on whether or not to grant consent to an assignment is in the sole discretion of City.

23. **RELEASE: EXCEPT FOR PAYMENTS DUE UNDER THIS CONTRACT, BUT NOTWITHSTANDING ANY OTHER PROVISIONS, COMPANY HEREBY RELEASES, ACQUITS, RELINQUISHES AND FOREVER DISCHARGES CITY, CITY'S EMPLOYEES AND OFFICERS, FROM ANY AND ALL DEMANDS, CLAIMS, DAMAGES, OR CAUSES OF ACTION OF ANY KIND WHATSOEVER WHICH COMPANY HAS OR MIGHT HAVE IN THE FUTURE, INCLUDING BUT NOT LIMITED TO BREACH OF CONTRACT, QUANTUM MERUIT, CLAIMS UNDER THE DUE PROCESS AND TAKINGS CLAUSES OF THE TEXAS AND UNITED STATES CONSTITUTIONS, TORT CLAIMS, OR CITY'S NEGLIGENCE**.

24. **Governing Law and Venue:** This Contract shall be governed by the laws of the State of Texas. All performance and payment made pursuant to this Contract shall be deemed to have occurred in Midland County, Texas. Exclusive venue for any claims, suits or any other action arising from or connected in any way to this Contract or the performance of this Contract shall be in Midland County, Texas. The obligations and undertakings of each of the parties to this Contract shall be deemed to have occurred in Midland County, Texas. This Contract shall be governed by, interpreted, enforced and construed under the law of the State of Texas. The laws of the State of Texas shall govern, construe and enforce all the rights and duties of the parties, including but not limited to tort claims and any and all contractual claims or disputes, arising from or relating in any way to the subject matter of this Contract, without regard to conflict on laws and rules that would direct application of the laws of another jurisdiction.

25. **Independent Contractor:** It is expressly understood and agreed that Company shall perform all work and services described herein as an independent contractor and not as an officer, agent, servant or employee of City; that Company shall have exclusive control of and the exclusive right to control the details of the services and work performed hereunder, and all persons performing the same; and shall be solely responsible for the acts and omissions of its officers, agents, employees, contractors and subcontractors; that the doctrine of respondeat superior shall not apply as between City and Company, its officers, agents, employees, contractors and subcontractors; and that nothing herein shall be construed as creating a partnership or joint enterprise between City and Company. No person performing any of the work and services described hereunder by Company shall be considered an officer, agent, servant or employee of the City. Further, it is specifically understood and agreed that nothing in this Contract is intended or shall be construed as creating a "Community of Pecuniary Interest" or "An Equal Right of Control" which would give rise to vicarious liability. Company shall be an independent contractor under

this Contract and shall assume all of the rights, obligations and liabilities, applicable to it as such independent contractor hereunder. City does not have the power to direct the order in which the work is done. City shall not have the right to control the means, methods or details of the Company's work. Company shall assume exclusive responsibility for the work. Company is entirely free to do the work in its own way.

26. **Notice of Alleged Breach; Statutory Prerequisites:** As a condition precedent to filing suit for alleged damages incurred by an alleged breach of an express or implied provision of this Contract, Company or its legal representative, shall give the City Manager, or any other reasonable official of City, notice in writing (consisting of one original and seven copies of notice attached to a copy of this Contract) of such damages, duly verified, within one-hundred fifty (150) days after the same has been sustained. The discovery rule does not apply to the giving of this notice. The notice shall include when, where and how the damages occurred, the apparent extent thereof, the amount of damages sustained, the amount for which Company will settle, the physical and mailing addresses of Company at the time and date the claim was presented and the physical and mailing addresses of Company for the six months immediately preceding the occurrence of such damages, and the names and addresses of the witnesses upon whom Company relies to establish its claim; and a failure to so notify the City Manager within the time and manner provided herein shall exonerate, excuse and except City from any liability whatsoever. City is under no obligation to provide notice to Company that Company's notice is insufficient. City reserves the right to request reasonable additional information regarding the claim. Said additional information shall be supplied within thirty (30) days after receipt of notice.

The statutory prerequisites outlined herein constitute jurisdictional requirements pursuant to Section 271.154 of the Texas Local Government Code and Section 311.034 of the Texas Government Code. Notwithstanding any other provision, Company's failure to comply with the requirements herein shall perpetually bar Company's claim for damages under Chapter 271 of the Texas Local Government Code, and Section 311.034 of the Texas Government Code, regardless if City has actual or constructive notice or knowledge of said claim or alleged damages. Company agrees that the requirements of this entire Contract are reasonable.

27. **Consideration:** The terms of this Contract are supported by good and valuable consideration, the receipt and sufficiency of which is hereby acknowledged by the parties named herein.

28. **Termination At Will:** City may terminate this Contract at will for no or any reason upon giving at least one hundred eighty (180) days written notice to Company. The parties to this Contract understand and agree that it is in City's sole discretion to cancel the Contract during the term of the Contract without

penalty to City. Company has no expectation and has received no guarantees that this Contract will not be terminated before the end of the Contract term. The parties have bargained for the flexibility of terminating this Contract upon tender of the requisite notice at any time during the term of the Contract. All work and services under the Contract shall be suspended upon termination of the Contract becoming effective.

29. **Compliance:** Company agrees that it shall comply with Texas Government Code Section 2252.908, *et seq.*, as amended. Company agrees that it shall comply with Texas Local Government Code Section 176.006, *et seq.*, as amended.

30. To the extent that Tex. Gov't Code section 2270.002 applies to this Contract, Company hereby verifies that Company does not boycott Israel and will not boycott Israel during the term of this Contract. If Tex. Gov't Code section 2270.002 does not apply to this Contract, such verification is not required, and Company shall be deemed to have not made such verification.

31. **Records Retention and Production of Information.** To the extent that this Contract is a contract described by Section 552.371 of the Texas Government Code, Company shall (1) preserve all contracting information related to the Contract as provided by the records retention requirements applicable to City for the duration of the contract, (2) promptly provide to City any contracting information related to the Contract that is in the custody or possession of Company on request of City, and (3) on completion of the Contract, either (i) provide at no cost to City all contracting information related to the Contract that is in the custody or possession of Company, or (ii) preserve the contracting information related to the Contract as provided by the records retention requirements applicable to City.

32. **Public Information.** To the extent that this Contract is a contract described by Section 552.371 of the Texas Government Code, Company agrees as follows in accordance with Section 552.372(b) of the Texas Government Code: The requirements of Subchapter J, Chapter 552, Government Code, may apply to this contract, and the contractor or vendor agrees that the contract can be terminated if the contractor or vendor knowingly or intentionally fails to comply with a requirement of that subchapter.

33. **Conflict of Terms.** If a conflict of terms or language exists between (i) any of the provisions of this Contract and (ii) any of the provisions contained in Exhibit A, precedence shall be given to the provisions of this Contract. For the avoidance of any doubt, the provisions contained in this Contract shall supersede any and all conflicting provisions contained in Exhibit A.

EXECUTED IN DUPLICATE the day and year first above mentioned.

THE CITY OF MIDLAND, TEXAS

By: _____
Courtney B. Sharp, City Manager

ATTEST

_____
Amy M. Turner, City Secretary

APPROVED ONLYAS TO FORM

_____
John Ohnemiller, City Attorney

COMPANY:

By: MW Builders, Inc.

Name: Todd Winnerman

Title: President

STATE OF TEXAS §
§
COUNTY OF TRAVIS §

BEFORE ME, the undersigned authority, on this ____ day of _____, 20____ personally appeared, Todd Winnerman, an officer of MW Builders, Inc., known to me to be the person and official whose name is subscribed to the forgoing instrument, and acknowledged to me that he executed the same as the act and deed of said corporation, for the purposes and consideration therein expressed, and in the capacity therein stated.

GIVEN UNDER MY HAND AND SEAL OF OFFICE this the ____day of _____, 20____.

_____
Notary Public, State of Texas

EXHIBIT A – List of Drawings & Specifications

Document List

1. Drawings prepared by Martinez Architects dated 01.16.2020 for Fire Station 5

- G 000 COVER PAGE
- G 001 GENERAL NOTES
- G 002 BUILDING CODE ANALYSIS
- G 003 BUILDING CODE ANALYSIS
- G 004 SITE CODE ANALYSIS
- C 100 COVER SHEET
- C 111 EXISTING SITE TOPOGRAPHY
- C 120 SWPPP
- C 130 SWPPP DETAILS
- C 200 DIMENSIONAL PLAN
- C 210 PAVING PLAN
- C 220 PAVING DETAILS
- C 221 PAVING DETAILS
- C 230 GRADING PLAN
- C 240 DRAINAGE PLAN
- C 300 UTILITY PLAN
- C 310 WATER DETAILS
- C 311 WATER DETAILS
- C 320 SEWER DETAILS
- C 500 BARRICADE DETAILS
- C 501 SIGN DETAILS
- LP-1 LANDSCAPE PLAN
- LP-2 LANDSCAPE PLAN
- LP-3 PLANTING DETAILS
- LP-4 IRRIGATION
- LP-5 IRRIGATION
- A 101 ARCHITECTURE SITE PLAN
- A 102 SITE DETAILS
- A 201 FIRST FLOOR PLAN
- A 202 SECOND FLOOR PLAN
- A 203 LEVEL 1 DIMENSIONED FLOOR PLAN
- A 204 LEVEL 2 DIMENSIONED FLOOR PLAN
- A 205 LEVEL 1 + 2 PARTITION TYPES
- A 206 PARTITION TYPES
- A 301 ROOF PLAN
- A 302 ROOF DETAILS
- A 401 EXTERIOR ELEVATIONS
- A 402 EXTERIOR ELEVATIONS
- A 403 BUILDING SECTIONS
- A 501 WALL SECTIONS
- A 502 WALL SECTIONS
- A 503 WALL SECTIONS
- A 601 ENLARGED FLOOR PLANS
- A 602 INTERIOR ELEVATIONS
- A 603 INTERIOR ELEVATIONS
- A 701 LEVEL 1 REFLECTED CEILING PLAN
- A 702 LEVEL 2 REFLECTED CEILING PLAN
- A 801 EXTERIOR DETAILS
- A 802 PLAN DETAILS
- A 803 PLAN DETAILS
- A 804 MILLWORK DETAILS
- A 805 MEZZANINE FRAMING DETAILS
- A 901 FINISH SCHEDULE
- A 902 DOOR AND WINDOW SCHEDULE
- A 903 LEVEL 1 FINISH PLAN
- A 904 LEVEL 2 FINISH PLAN
- A 905 SIGNAGE DETAIL & SCHEDULE
- A 906 EQUIPMENT SCHEDULE
- S 000 COVER SHEET
- S 001 3D CONCEPTUAL
- S 101 GENERAL NOTES
- S 102 GENERAL NOTES
- S 103 GENERAL NOTES
- S 201 FOUNDATION PLAN
- S 202 SECOND FLOOR FRAMING PLAN
- S 203 LOW ROOF FRAMING PLAN
- S 204 HIGH ROOF FRAMING PLAN
- S 301 FOUNDATION DETAILS
- S 302 FOUNDATION DETAILS
- S 303 FOUNDATION DETAILS
- S 304 FOUNDATION DETAILS
- S 305 FOUNDATION DETAILS
- S 306 FOUNDATION DETAILS
- S 401 FRAMING DETAILS
- S 402 FRAMING DETAILS
- S 403 FRAMING DETAILS
- S 404 FRAMING DETAILS
- S 501 COMPOSITE FLOOR DETAILS
- S 502 COMPOSITE FLOOR DETAILS
- S 503 COMPOSITE FLOOR DETAILS
- S 601 ROOF FRAMING DETAILS
- S 602 ROOF FRAMING DETAILS
- S 603 ROOF FRAMING DETAILS
- S 604 ROOF FRAMING DETAILS
- S 605 ROOF FRAMING DETAILS
- S 701 MASONRY DETAILS
- S 702 MASONRY DETAILS
- S 703 MASONRY DETAILS
- S 801 BRACE ELEVATIONS & DETAILS
- S 802 LEANING COLUMN ELEVATIONS & DETAILS
- MEP 101 MEP SITE PLAN
- MEP 102 MEP ROOF PLAN

- M 001 MECHANICAL SYMBOLS AND ABBREVIATIONS
- M 211 LEVEL 1 MECHANICAL PLAN
- M 212 LEVEL 2 & 3 MECHANICAL PLAN
- M 501 MECHANICAL SCHEDULES
- M 502 MECHANICAL SCHEDULES
- M 601 MECHANICAL DETAILS
- M 602 MECHANICAL DETAILS
- M 603 MECHANICAL VRF DIAGRAMS
- E 001 ELECTRICAL SYMBOL LEGEND
- E 101 LEVEL 1 LIGHTING PLAN
- E 102 LEVEL 2 & 3 LIGHTING PLAN
- E 201 LEVEL 1 POWER PLAN
- E 202 LEVEL 2 & 3 POWER PLAN
- E 401 ELECTRICAL ONE-LINE DIAGRAMS
- E 501 ELECTRICAL SCHEDULES
- E 502 ELECTRICAL SCHEDULES
- E 601 ELECTRICAL DETAILS
- E 602 ELECTRICAL DETAILS
- P 001 PLUMBING SYMBOLS
- P 211 LEVEL 1 PLUMBING PLAN
- P 212 LEVEL 2 & 3 PLUMBING PLAN
- P 401 PLUMBING RISER DIAGRAMS
- P 501 PLUMBING SCHEDULES
- P 601 PLUMBING DETAILS
- P 602 PLUMBING DETAILS
- TS 001 TECH & SECURITY SYMBOLS SCHEDULES
- TS 211 LEVEL 1 LOW VOLTAGE PLAN
- TS 212 LEVEL 2 & 3 LOW VOLTAGE PLAN
- TS 401 LOW VOLTAGE ENLARGED FLOOR PLANS
- TS 501 TECHNOLOGY & SECURITY DETAILS
- TS 502 TECHNOLOGY & SECURITY DETAILS
- TS 503 TECHNOLOGY & SECURITY DETAILS
- TS 601 TECHNOLOGY & SECURITY SCHEDULES

2. Drawings prepared by Martinez Architects dated 01.30.2020 for Fire Station 11

- G000 COVER PAGE
- G001 GENERAL NOTES
- G002 BUILDING CODE ANALYSIS
- G003 BUILDING CODE ANALYSIS
- G004 SITE CODE ANALYSIS
- C110 FINAL PLAT
- C 100 COVER SHEET
- C 111 EXISTING SITE TOPOGRAPHY
- C 120 SWPPP
- C 130 SWPPP DETAILS
- C 200 DIMENSIONAL PLAN
- C 210 PAVING PLAN
- C 220 PAVING DETAILS
- C 221 PAVING DETAILS
- C 222 PAVING DETAILS
- C 230 GRADING PLAN
- C 240 DRAINAGE PLAN PRE VS POST
- C 241 DRAINAGE PLAN - BASINS
- C 300 UTILITY PLAN
- C 310 WATER DETAILS
- C 311 WATER DETAILS
- C 320 SEWER DETAILS
- C 500 BARRICADE DETAILS
- C 501 SIGN DETAILS
- I 1.0 IRRIGATION PLAN
- I 1.A1 IRRIGATION PLAN ALTERNATE 1
- I 1.A2 IRRIGATION PLAN ALTERNATE 2
- I 2.0 IRRIGATION DETAILS
- L0.0 GENERAL
- L 1.0 LANDSCAPE PLAN
- L 1.A1 LANDSCAPE PLAN ALTERNATE 1
- L 1.A2 LANDSCAPE PLAN ALTERNATE 2
- L 2.0 HYDROSEED PLAN
- L 2.A1 HYDROSEED PLAN ALTERNATE 1
- L 3.0 LANDSCAPE DETAILS
- A101 ARCHITECTURE SITE PLAN - BASE BID
- A101.1 ARCHITECTURE SITE PLAN - ALT #1
- A101.2 ARCHITECTURE SITE PLAN - ALT #2
- A102 SITE DETAILS
- A201 LEVEL 1 - FIRE STATION
- A202 LEVEL 1 - ADD ALTERNATES #1&2
- A203 MEZZANINE PLAN
- A204 DIMENSIONED FLOOR PLAN
- A205 PARTITION TYPES
- A301 ROOF PLAN
- A302 ROOF DETAILS
- A401 EXTERIOR ELEVATIONS - FIRE STATION
- A402 EXTERIOR ELEVATIONS - FIRE STATION
- A403 EXTERIOR ELEVATIONS - ALTS #1 & #2
- A404 BUILDING SECTIONS
- A501 WALL SECTIONS - FIRE STATION
- A502 WALL SECTIONS - FIRE STATION
- A503 WALL SECTIONS - FIRE STATION
- A504 WALL SECTIONS - BID ALTERNATE #2
- A601 ENLARGED FLOOR PLANS
- A602 INTERIOR ELEVATIONS
- A603 INTERIOR ELEVATIONS
- A701 LEVEL 1 REFLECTED CEILING PLAN -
- A702 LEVEL 1 REFLECTED CEILING PLAN – BID ALTERNATES 1 & 2
- A801 EXTERIOR DETAILS
- A803 PLAN DETAILS
- A804 PLAN DETAILS
- A805 MILLWORK DETAILS
- A901 FINISH SCHEDULE
- A902 DOOR AND WINDOW SCHEDULE

- A903 LEVEL 1 FINISH PLAN
- A905 SIGNAGE DETAIL & SCHEDULE
- A906 EQUIPMENT SCHEDULE
- S 000 COVER SHEET
- S 001 3D CONCEPTUAL
- S 101 GENERAL NOTES
- S 102 GENERAL NOTES
- S 103 GENERAL NOTES
- S 201 FOUNDATION PLAN -FIRE STATION
- S 202 FOUNDATION PLAN - SUPPORT COMPONENTS
- S 211 MEZZANINE FRAMING & LOW ROOF FRAMING PLANS
- S 212 HIGH ROOF FRAMING PLAN
- S 213 ROOF FRAMING PLANS - SUPPORT COMPONENTS
- S 301 FOUNDATION DETAILS
- S 302 FOUNDATION DETAILS
- S 303 FOUNDATION DETAILS
- S 304 FOUNDATION DETAILS
- S 305 FOUNDATION DETAILS
- S 306 FOUNDATION DETAILS
- S 401 FRAMING DETAILS
- S 402 FRAMING DETAILS
- S 403 FRAMING DETAILS
- S 404 FRAMING DETAILS
- S 501 FLOOR FRAMING DETAILS
- S 502 FLOOR FRAMING DETAILS
- S 601 ROOF FRAMING DETAILS
- S 602 ROOF FRAMING DETAILS
- S 603 ROOF FRAMING DETAILS
- S 604 ROOF FRAMING DETAILS
- S 605 ROOF FRAMING DETAILS
- S 606 ROOF FRAMING DETAILS
- S 607 ROOF FRAMING DETAILS
- S 608 ROOF FRAMING DETAILS
- S 609 ROOF FRAMING DETAILS
- S 610 ROOF FRAMING DETAILS
- S 701 MASONRY DETAILS
- S 702 MASONRY DETAILS
- S 703 MASONRY DETAILS
- S 801 BRACE ELEVATIONS & DETAILS
- S 802 BRACE DETAILS
- MEP 101.1 MEP SITE PLAN - ALTERNATE #1
- MEP 101.2 MEP SITE PLAN - ALTERNATE #2
- MEP 101 MEP SITE PLAN - BASE BID
- MEP 301 MEP SITE PLAN - ADD ALTS 1 & 2
- M 001 MECHANICAL SYMBOLS AND ABBREV.
- M 201 LEVEL 1 & MEZANINE MECHANICAL PLAN
- M 501 MECHANICAL SCHEDULES
- M 502 MECHANICAL SCHEDULES
- M 601 MECHANICAL DETAILS
- M 602 MECHAICAL DETAILS
- M 603 MECHANICAL VRF DIAGRAMS
- E 001 ELECTRICAL SYMBOL LEGEND
- E 101 LEVEL 1 & MEZZANINE LIGHTING PLAN
- E 201 LEVEL 1 POWER PLAN
- E 301 MEZZANINE & ENLARGED POWER PLANS
- E 401 ELECTRICAL ONE-LINE DIAGRAM
- E 501 ELECTRICAL SCHEDULES
- E 502 ELECTRICAL SCHEDULES
- E 601 ELECTRICAL DETAILS
- E 602 ELECTRICAL DETAILS
- P 000 PLUMBING SYMBOLS
- P 201 LEVEL 1 & MEZZANINE PLUMBING PLAN
- P 401 PLUMBING RISER DIAGRAMS
- P 402 PLUMBING RISER DIAGRAMS
- P 501 PLUMBING SCHEDULES
- P 601 PLUMBING DETAILS
- P 602 PLUMBING DETAILS
- TS 001 TECHNOLOGY & SECURITY SYMBOLS
- TS 201 LEVEL 1 & MEZZANINE LOW VOLTAGE
- TS 401 TECHNOLOGY & SECURITY DETAILS
- TS 501 TECHNOLOGY & SECURITY DETAILS
- TS 502 TECHNOLOGY & SECURITY DETAILS
- TS 503 TECHNOLOGY & SECURITY DETAILS
- TS 504 TECHNOLOGY & SECURITY DETAILS
- TS 601 TECHNOLOGY SCHEDULES

3. Specifications prepared by Martinez Architects dated 1.30.2020
   - 00 01 01 Title Page
   - 00 01 10 Table of Contents
   - 00 21 13 Instruction to Bidders/Bid Forms
   - 00 31 32 Geotechnical Data
   - 00 31 50 Independent Testing Agency Approvals
   - 00 73 43 Prevailing Wage Rates
   - 01 11 00 Summary of Work
   - 01 16 00 Product Requirements
   - 01 21 00 Allowances
   - 01 22 00 Unit Prices
   - 01 25 13 Product Substitution Procedures
   - 01 25 13.1 Product Substitution Procedures Form
   - 01 26 00 Contract Modification Procedures
   - 01 26 13 Request for Interpretation
   - 01 26 13.1 Request for Interpretation Form
   - 01 29 00 Payment Procedures
   - 01 31 00 Project Management & Coordination
   - 01 31 06 Coordination Drawings
   - 01 31 06.1 Electronic Transfer Document
   - 01 31 19 Project Meetings
   - 01 32 16 Construction Progress Schedule
   - 01 32 23 Survey & Layout Data
   - 01 33 00 Submittal Procedures
   - 01 35 16 Alteration Project Procedures

- 01 41 00 Regulatory Requirements
- 01 42 00 Definitions & Abbreviations
- 01 43 00 Inspection & Testing Laboratory Services
- 01 50 00 Temporary Facilities & Controls
- 01 55 13 Stabilized Construction Exit
- 01 55 13.10 Stabilized Construction Access
- 01 55 26 Traffic Control
- 01 57 00 Source Controls
- 01 57 10 TPDES Requirements
- 01 57 13 Filter Fabric Fence
- 01 57 23 Temporary Storm Water Pollution Control
- 01 60 00 Materials & Equipment
- 01 72 00 Common Execution Requirements
- 01 73 29 Cutting & Patching
- 01 74 16 Site Maintenance
- 01 74 19 Construction Waste Management Disposal
- 01 77 00 Closeout Procedures
- 01 78 23 Operation & Maintenance Data
- 01 79 00 Demonstration & Training
- 01 91 13 General Commissioning Requirements
- 03 30 00 Cast-In-Place Concrete
- 03 66 00 Special Concrete Floor Finishes
- 03 66 00.1 Special Concrete Floor Finishes Form
- 04 20 00 Unit Masonry
- 04 21 00 Brick Masonry
- 04 72 00 Cast Stone Unit Masonry
- 05 12 13 Architectural Exposed Structural Steel
- 05 40 00 Cold-Formed Metal Framing
- 05 50 00 Metal Fabrications
- 05 51 33 Metal Wall Ladder
- 05 51 33.13 Inclined Metal Ladders
- 06 10 00 Rough Carpentry
- 06 16 00 Sheathing
- 06 40 10 Interior Architectural Millwork
- 06 65 00 Simulated Wood Products
- 06 82 00 Glass Fiber Reinforced Plastic
- 07 11 13 Bituminous Dampproofing
- 07 18 20 Penetrating Floor Sealer
- 07 21 00 Thermal Insulation
- 07 25 00 Weather Barrier
- 07 26 16 Below-Grade Vapor Barrier
- 07 41 13 Metal Roof Panels
- 07 42 13 Metal Wall Panels
- 07 54 22 Thermoplastic Polyefin (TPO) Roofing
- 07 62 00 Sheet Metal Flashing & Trim
- 07 71 23 Manufactured Gutter & Downspouts
- 07 84 13 Firestopping
- 07 92 00 Joint Sealants
- 08 11 13 Hollow Metal Doors & Frames
- 08 14 23 Plastic-Laminate-Faced Wood Doors
- 08 31 13 Access Doors
- 08 33 00 Overhead Coiling Doors
- 08 35 13 Four Fold Doors
- 08 36 00 Sectional Overhead Doors
- 08 44 13 Glazed Aluminum Curtain Walls
- 08 71 00 Door Hardware
- 08 74 00 Access Control
- 08 80 00 Glazed Systems
- 08 91 00 Metal Louvers
- 09 21 16 Gypsum Board Assemblies
- 09 30 13 Ceramic Tile
- 09 51 00 Acoustical Ceiling
- 09 65 00 Resilient Flooring
- 09 91 00 Painting
- 10 14 00 Signage & Graphics
- 10 26 00 Wall Door Protection
- 10 28 13 Toilet Accessories
- 10 44 00 Fire Extinguishers & Cabinets
- 10 50 30 Turnout Gear Lockers Wall Mounted
- 10 73 16 Aluminum Canopies
- 10 75 00 Flagpoles
- 11 23 00 Commercial Laundry Equipment
- 11 30 00 Residential Appliances
- 12 21 00 Window Coverings
- 12 49 20 Manual Operated Roller Shade
- 14 24 00 Machine Room-Less Hydraulic Passenger Elevator
- 21 00 00 Fire Protection
- 21 05 29 Hangers and Supports for Fire Suppression Piping and Equipment
- 21 13 13 Wet Pipe Sprinkler System
- 22 02 00 Basic Materials and Methods
- 22 11 16 Domestic Water Piping - Cross-Linked Polyethylene (PEX)
- 22 05 13 Common Motor Requirements for Plumbing Equipment
- 22 05 16 Expansion Fittings and Loops for Plumbing Piping
- 22 05 29 Hangers & Support for Plumbing Piping and Equipment
- 22 05 48 Vibration & Seismic Controls for Plumbing Piping
- 22 05 53 Identification for Plumbing Piping & Equip
- 22 07 19 Plumbing and Piping Insulation
- 22 08 00 Commissioning of Plumbing Systems
- 22 10 00 Plumbing Piping
- 22 11 19 Plumbing Specialties
- 22 11 21 Natural Gas Piping Systems
- 22 30 00 Plumbing Equipment
- 22 40 00 Plumbing Fixtures
- 22 61 00 Compressed Air Systems
- 22 66 59 Fire Hall Emergency Shutoff
- 23 02 00 Basic Materials and Methods
- 23 05 13 Common Motor Requirements for HVAC
- 23 05 16 Expansion Fittings & Loops for HVAC Piping

- 23 05 29 Hangers & Support for HVAC Piping & Equipment
- 23 05 48 Vibration and Seismic Controls for HVAC Piping and Equipment
- 23 05 53 Identification for HVAC Piping and Equipment
- 23 05 93 Testing, Adjusting, and Balancing
- 23 07 13 Duct Insulation
- 23 07 16 HVAC Equipment Insulation
- 23 07 19 HVAC Piping Insulation
- 23 08 00 Commissioning of HVAC Systems
- 23 21 13 Above Ground Hydronic Piping
- 23 23 00 Refrigerant Piping
- 23 31 13 Metal Ductwork
- 23 33 00 Ductwork Accessories
- 23 34 00 HVAC Fans
- 23 35 00.1 Vehicle Exhaust Removal System – Station #5
- 23 35 00.2 Vehicle Exhaust Removal System – Station #11
- 23 37 13 Air Distribution Devices
- 23 41 00 Air Filters
- 23 51 00 Breechings, Chimneys, and Stacks
- 23 51 26 Flue Pipe Systems
- 23 55 00 Fuel Fired Unit Heaters
- 23 62 13 Air Cooled Condensing Units
- 23 81 26 Packaged Wall Mounted Air Conditioning Unit
- 23 81 43 Variable Refrigerant Flow (VRF) for HVAC System
- 23 82 19 Fan Coil Unit
- 26 02 00 Basic Materials and Methods
- 26 05 19 Wire, Cable and Related Materials
- 26 05 26 Grounding
- 26 05 33 Raceways
- 26 08 00 Commissioning Electrical Systems
- 26 24 16 Panel Boards
- 26 27 26 Wiring Devices
- 26 28 10 Class J Fuses
- 26 28 16 Safety and Disconnect Switches
- 26 29 01 Manual Motors Starters
- 26 29 26 Miscellaneous Electrical Controls and Wiring
- 26 32 13 16 (200 kW) Natural Gas Engine Driven Standby Engine Generating System
- 26 41 13 13 Lightning Protection System for Low Rise
- 26 43 13 13 Surge Protective Devices – Standard Interrupting
- 26 51 00 13 Lightning Fixtures (LED)
- 26 51 15 Ceiling Fans
- 27 00 00 Communications
- 27 05 26 Grounding and Bonding for Communications Systems
- 27 05 28 Pathways for Communications Systems
- 27 05 43 Underground Ducts and Raceways for Communications
- 27 11 00 Communications Equipment Room Fittings
- 27 15 00 Communications Horizontal Cabling
- 27 41 31 CATV System
- 28 00 00 Electronic Security
- 28 10 00 Access Control and Intrusion
- 28 23 00 Video Surveillance
- 28 31 00 Fire Alarm and Smoke Detection System
- 31 11 00 Clearing & Grubbing
- 31 11 10 Waste Material Disposal
- 31 23 13 Grading & Compaction of Subgrade
- 31 23 33 Excavation Trenching & Backfill
- 31 23 34 Trench Safety Systems
- 31 24 13 Embankment
- 31 31 16 Termite Control
- 31 36 00 Wire Mesh Gabion Wall
- 32 13 12 Hot Mix Asphaltic Concrete Pavement
- 32 13 13 Concrete Paving
- 32 16 00 Concrete Curbs
- 32 17 13 Concrete Wheel Stops
- 32 17 23 Pavement Marking Materials
- 32 20 10 Concrete Sidewalks
- 32 31 13 Chain Link Fencing
- 32 84 00 Planting Irrigation Specifications
- 32 91 00 Planting Preparation & Installation of Landscape
- 32 92 13 Hydromulch Seeding
- 33 10 00 Water Distribution Mains
- 33 30 00 Sanitary Sewers

4. The above items are modified by Addenda prepared by Martinez Architects
   - Addendum 1 dated 02.14.2020
   - Addendum 2 dated 02.20.2020
   - Addendum 3 dated 02.24.2020
   - Addendum 4 dated 02.26.2020
   - Addendum 5 dated 02.27.2020

BID PROPOSAL FORM

Date: 02/28/2020

Bid of MW Builders, Inc. *(company legal name)*,

which is a Corporation *(type of legal entity)*,

for the construction of:

City of Midland

PROPOSAL FORM PART A

Pursuant to the published Request for Competitive Sealed Proposals for Construction Services, the undersigned Bidder hereby proposes to perform all the work and furnish all necessary superintendence, labor, machinery, equipment, tools and materials, and whatever else may be necessary to complete all the work described in or reasonably inferable from the Contract Documents for the construction of the **City of Midland** with all related appurtenances, complete, tested, and operational, in accordance with the Plans and Specifications prepared by Martinez Architects, 900 Rockmead Dr, Suite 250, Kingwood, Texas 77339.

This Bid Proposal Form represents Selection Criteria "B" from the Request for Competitive Sealed Proposals for Construction Services (RFP), and shall be submitted in a separate, sealed envelope along with the requested copies of the RFP Response, as outlined in the RFP.

The Bidder binds themselves, upon acceptance of his proposal, to execute the Standard Form of Agreement (AIA Document 201), and furnish an acceptable Performance and Payment Bond in the amount of One Hundred Percent (100%) of the total Contract Price for performing and completing the said work within the time stated and for the prices stated in Part B of this proposal along with all required insurance in the required amounts, per the bid documents 00 21 13 Instruction to Bidders/Bid Forms.

The undersigned Bidder agrees to commence work within 10 days of the date of a written Notice to Proceed. It is understood that the Work is to be Substantially Complete within **Three-Hundred Sixty (365) Days** after the date of the Notice to Proceed. Time for Substantial Completion shall begin on the date established by the Notice to Proceed. The Contractor will pay Liquidated Damages in the amount(s) specified in the Instruction to Bidders/Bid Forms Section 00 21 13, in the event the Work is not Substantially Complete within the Contract Time.

The undersigned agrees that the amounts bid in this Bid Proposal will not be withdrawn or modified for Ninety (90) Days following date of Bid Proposal opening, or such longer period as may be agreed to in writing by the City of Midland and the Bidder. The Proposer shall secure and submit with Bid Proposal Form a Bid Bond in the amount of Five Percent (5%) of the Total Bid Amount.

The Successful Bidder is required to enter into the Standard Form of Agreement (AIA Document 201) and furnish an acceptable Performance and Payment Bond and Maintenance Bond, each in the amount of One Hundred (100) Percent of the Contract Price, along with all required insurance in the stated amounts within Ten (10) Days of the Notice of Award. Unless otherwise expressly provided herein, all references to "day(s)" shall mean calendar day(s).

The Bidder acknowledges that the following Addenda have been received. The modifications to the Bidding Documents noted therein have been considered and all costs thereto are included in the Bid Proposal prices.

Addendum No.: 01 Date: 2/14/20 Addendum No.: 02 Date: 2/20/20

Addendum No.: 03 Date: 2/24/20 Addendum No.: 04 Date: 2/26/20

Addendum No.: 05 2/27/20

Bidder hereby represents that the only person or parties interested in this offer as principals are those named. Bidder has not directly or indirectly entered into any agreement, participated in any collusion, or otherwise taken any action in restraint of free competitive bidding.

Firm Name: MW Builders, Inc. By:

Todd Winnerman

Title: President

Address: 965 Advance Avenue Midland, TX 79701

Phone No: 432.687.1219

ATTEST:

Todd Winnerman

(Typed or Printed Name)

Signature

Date: 02/28/2020

END OF PROPOSAL FORM PART A

PROPOSAL FORM PART B

Bidder hereby proposes to perform all the work and furnish all necessary superintendence, labor, machinery, equipment, tools and materials, and whatever else may be necessary to complete all the work described in or reasonably inferable from the Contract Documents for the construction of the **City of Midland** with all related appurtenances, complete, tested, and operational, in accordance with the Plans and Specifications, including all addenda, prepared by Martinez Architects, 900 Rockmead Dr, Suite 250, Kingwood, Texas 77339.

Proposal Amount – Fire Stations 5 and Site Developments:

Five million and fifty thousand Dollars

($ 5,050,000.00)

Proposal Amount – Fire Stations 11 and Site Developments:

Five million, six hundred and seventeen thousand Dollars

($ 5,617,000.00)

Alternate Bid Proposal No. 1 – Reference drawing sheet A101.1 and Detail 1/A202 for the following scope:

a. Add the fuel station – Fire Station 11
b. Add additional vehicular paving
c. Add sidewalk to new vehicular paving area
d. Relocate dumpster enclosure from Base Bid location

Six hundred and thirty thousand Dollars

($ 630,000.00)

Alternate Bid Proposal No. 2 – Reference drawing sheet A101.2 and Detail 2/A202 for the following scope: *Note: Alternate No. 2 will only be considered for acceptance if Alternate No. 1 is accepted.*

a. Add Wash Bay building with sidewalk and curb – Fire Station 11
b. Add canopy, screen wall, and concrete pad to accommodate added vacuum/tire fill station
c. Relocate dumpster encloser from Alternat No. 1 location

Four hundred and ten thousand Dollars

($ 410,000.00)

IT IS UNDERSTOOD that Proposal Amount listed above represents Selection Criteria “B” from the Request for Competitive Sealed Proposals for Construction Services (RFP), and will be considered along with other criteria established in the RFP, according to the point scale assigned in the RFP.

The City of Midland will award the project based on the highest scoring respondent to the RFP.

The City of Midland reserves the right to reject any or all proposals for any or all products and/or services covered in this proposal and/ or to waive informalities in such proposals. The City of Midland further reserves the right to accept any proposals deemed to be the Best Value to the District.

Offeror's Authorized Signature

3.03 LIST OF UNIT PRICES

Aggregate Base

A. ADDITIONAL AGGREGATE BASE: ~~Select fill~~ material required in excess of the quantity indicated by the Contract Documents, $66.00 /CY.

B. ADDITIONAL 5" CONCRETE PAVING: Increase area of 5" concrete paving, $10.00/SF of concrete. Pricing to include all related costs for concrete, reinforcing, excavation, etc.

C.ADDITIONAL 6" CONCRETE PAVING: Increase area of 6" concrete paving, $11.00/SF of concrete. Pricing to include all related costs for concrete, reinforcing, excavation, etc.

D. ADDITIONAL 7" CONCRETE PAVING: Increase area of 7" concrete paving, $12.00/SF of concrete. Pricing to include all related costs for concrete, reinforcing, excavation, etc.

E. ADDITIONAL CONCRETE FLATWORK: Increase area of concrete sidewalks, $8.50/SF of concrete. Pricing to include all related costs for concrete, reinforcing, excavation, etc.

MW Builders reserves the right to negotiate a mutually acceptable contract, and specifically Paragraph 23 of the proposed form of contract. MW Builders also includes coordination with, but excludes all costs associated with, the engineering and relocation of lines and poles owned by the various utility companies, such as Oncor, AT&T, Suddenlink, etc.

BID BOND

THE STATE OF TEXAS §

SURETY NO. N/A

COUNTY OF MIDLAND §

KNOW ALL MEN BY THESE PRESENTS, THAT MW Builders, Inc.
965 Advance Avenue, Midland, TX 79701

(hereinafter called the Principal), as Principal, and Pacific Indemnity Company
202B Hall's Mill Road, Whitehouse Station, NJ 08889 (215) 640-1000

(hereinafter called the Surety), as Surety, are held and firmly bound unto the City of Midland, Texas a home rule municipal corporation of Midland County, Texas, (hereinafter called the Obligee), in the amount of Five Percent of Amount Bid DOLLARS ($ 5% of Amount Bid), for the payment whereof the said Principal and Surety bind themselves, and their heirs, administrators, executors, successors and assigns, jointly and severally, firmly by these presents.

WHEREAS, the Principal has submitted a Bid or Proposal to enter into a certain written Contract with the obligee to RFP #20002150; Construction of Two Fire Stations, Fire Station No. 5 and Fire Station No. 11.

NOW, THEREFORE, THE CONDITION OF THIS OBLIGATION IS SUCH, that if the said Principal shall faithfully enter into such written Contract, then this obligation shall be void; otherwise to remain in full force and effect.

IT IS EXPRESSLY UNDERSTOOD AND AGREED that if said Principal should withdraw its Bid anytime after such Bid is opened and before official rejection to such Bid or, if successful in securing the award thereof, said Principal should fail to enter into the Contract and furnish satisfactory Performance Bond and Payment Bond, the Obligee, in either such events, shall be entitled and is hereby given the right to collect the full amount of this Bid Bond as liquidated damages.

PROVIDED, further that if any legal action be filed upon this Bond venue shall lie in Midland County, Texas

IN WITNESS THEREOF, THE SAID PRINCIPAL AND SURETY do sign and seal this instrument, this 26th day of February, 20 20.

MW Builders, Inc.	Pacific Indemnity Company
Principal	Surety
By JEREMY LAWDEN - ASST. SECRETARY	By Rebecca S. Leal, Attorney-In-Fact
Address 965 Advance Avenue Midland, TX 79701	Address 202B Hall's Mill Road Whitehouse Station, NJ 08889

APPROVED AS TO FORM:

City Attorney

NOTE: ATTACH POWER OF ATTORNEY

CHUBB

Power of Attorney

Federal Insurance Company | Vigilant Insurance Company | Pacific Indemnity Company
Westchester Fire Insurance Company | ACE American Insurance Company

Know All by These Presents, that **FEDERAL INSURANCE COMPANY,** an Indiana corporation, **VIGILANT INSURANCE COMPANY,** a New York corporation, **PACIFIC INDEMNITY COMPANY,** a Wisconsin corporation, **WESTCHESTER FIRE INSURANCE COMPANY** and **ACE AMERICAN INSURANCE COMPANY** corporations of the Commonwealth of Pennsylvania, do each hereby constitute and appoint Christy M. Braile, Laura M. Buhrmester, Jeffrey C. Carey, Mary T. Flanigan, Tahitia M. Fry, C. Stephens Griggs, Rebecca S. Leal, Charissa D. Lecuyer, Kellie A. Meyer, Patrick T. Pribyl, Debra J. Scarborough, Evan D. Sizemore and Charles R. Teter, III of Kansas City, Missouri ----------

each as their true and lawful Attorney-in-Fact to execute under such designation in their names and to affix their corporate seals to and deliver for and on their behalf as surety thereon or otherwise, bonds and undertakings and other writings obligatory in the nature thereof (other than bail bonds) given or executed in the course of business, and any instruments amending or altering the same, and consents to the modification or alteration of any instrument referred to in said bonds or obligations.

In Witness Whereof, said **FEDERAL INSURANCE COMPANY, VIGILANT INSURANCE COMPANY, PACIFIC INDEMNITY COMPANY, WESTCHESTER FIRE INSURANCE COMPANY** and **ACE AMERICAN INSURANCE COMPANY** have each executed and attested these presents and affixed their corporate seals on this 7th day of **November, 2019.**

Dawn M. Chloros, Assistant Secretary

Stephen M. Haney, Vice President

STATE OF NEW JERSEY
County of Hunterdon ss.

On this 7th day of **November, 2019,** before me, a Notary Public of New Jersey, personally came Dawn M. Chloros and Stephen M. Haney, to me known to be Assistant Secretary and Vice President, respectively, of FEDERAL INSURANCE COMPANY, VIGILANT INSURANCE COMPANY, PACIFIC INDEMNITY COMPANY, WESTCHESTER FIRE INSURANCE COMPANY and ACE AMERICAN INSURANCE COMPANY, the companies which executed the foregoing Power of Attorney, and the said Dawn M. Chloros and Stephen M. Haney, being by me duly sworn, severally and each for herself and himself did depose and say that they are Assistant Secretary and Vice President, respectively, of FEDERAL INSURANCE COMPANY, VIGILANT INSURANCE COMPANY, PACIFIC INDEMNITY COMPANY, WESTCHESTER FIRE INSURANCE COMPANY and ACE AMERICAN INSURANCE COMPANY and know the corporate seals thereof, that the seals affixed to the foregoing Power of Attorney are such corporate seals and were thereto affixed by authority of said Companies; and that their signatures as such officers were duly affixed and subscribed by like authority.

Notarial Seal

KATHERINE J. ADELAAR
NOTARY PUBLIC OF NEW JERSEY
No. 2316685
Commission Expires July 16, 2024

Notary Public

CERTIFICATION

Resolutions adopted by the Boards of Directors of FEDERAL INSURANCE COMPANY, VIGILANT INSURANCE COMPANY, and PACIFIC INDEMNITY COMPANY on August 30, 2016; WESTCHESTER FIRE INSURANCE COMPANY on December 11, 2006; and ACE AMERICAN INSURANCE COMPANY on March 20, 2009:

"RESOLVED, that the following authorizations relate to the execution, for and on behalf of the Company, of bonds, undertakings, recognizances, contracts and other written commitments of the Company entered into in the ordinary course of business (each a "Written Commitment"):

(1) Each of the Chairman, the President and the Vice Presidents of the Company is hereby authorized to execute any Written Commitment for and on behalf of the Company, under the seal of the Company or otherwise.

(2) Each duly appointed attorney-in-fact of the Company is hereby authorized to execute any Written Commitment for and on behalf of the Company, under the seal of the Company or otherwise, to the extent that such action is authorized by the grant of powers provided for in such person's written appointment as such attorney-in-fact.

(3) Each of the Chairman, the President and the Vice Presidents of the Company is hereby authorized, for and on behalf of the Company, to appoint in writing any person the attorney-in-fact of the Company with full power and authority to execute, for and on behalf of the Company, under the seal of the Company or otherwise, such Written Commitments of the Company as may be specified in such written appointment, which specification may be by general type or class of Written Commitments or by specification of one or more particular Written Commitments.

(4) Each of the Chairman, the President and the Vice Presidents of the Company is hereby authorized, for and on behalf of the Company, to delegate in writing to any other officer of the Company the authority to execute, for and on behalf of the Company, under the Company's seal or otherwise, such Written Commitments of the Company as are specified in such written delegation, which specification may be by general type or class of Written Commitments or by specification of one or more particular Written Commitments.

(5) The signature of any officer or other person executing any Written Commitment or appointment or delegation pursuant to this Resolution, and the seal of the Company, may be affixed by facsimile on such Written Commitment or written appointment or delegation.

FURTHER RESOLVED, that the foregoing Resolution shall not be deemed to be an exclusive statement of the powers and authority of officers, employees and other persons to act for and on behalf of the Company, and such Resolution shall not limit or otherwise affect the exercise of any such power or authority otherwise validly granted or vested."

I, Dawn M. Chloros, Assistant Secretary of FEDERAL INSURANCE COMPANY, VIGILANT INSURANCE COMPANY, PACIFIC INDEMNITY COMPANY, WESTCHESTER FIRE INSURANCE COMPANY and ACE AMERICAN INSURANCE COMPANY (the "Companies") do hereby certify that

(i) the foregoing Resolutions adopted by the Board of Directors of the Companies are true, correct and in full force and effect,
(ii) the foregoing Power of Attorney is true, correct and in full force and effect.

Given under my hand and seals of said Companies at Whitehouse Station, NJ, this February 26, 2020.

Dawn M. Chloros, Assistant Secretary

IN THE EVENT YOU WISH TO VERIFY THE AUTHENTICITY OF THIS BOND OR NOTIFY US OF ANY OTHER MATTER, PLEASE CONTACT US AT:
Telephone (908) 903-3493 Fax (908) 903-3656 e-mail: surety@chubb.com

Policyholder Information Notice

IMPORTANT NOTICE

To obtain information or make a complaint:

You may call Chubb's toll-free telephone number for information or to make a complaint at

1-800-36-CHUBB

You may contact the Texas Department of Insurance to obtain information on companies, coverages, rights or complaints at

1-800-252-3439

You may write the Texas Department of Insurance

P.O. Box 149104
Austin, TX 78714-9104
FAX # (512) 475-1771
Web: http://www.tdi.state.tx.us
E-mail: ConsumerProtection@tdi.state.tx.us

PREMIUM OR CLAIM DISPUTES:

Should you have a dispute concerning your premium or about a claim you should contact the agent first. If the dispute is not resolved, you may contact the Texas Department of Insurance.

ATTACH THIS NOTICE TO YOUR POLICY:

This notice is for information only and does not become a part or condition of the attached document.

AVISO IMPORTANTE

Para obtener información o para someter una queja:

Usted puede llamar al número de teléfono gratis de Chubb's para información o para someter una queja al

1-800-36-CHUBB

Puede comunicarse con el Departamento de Seguros de Texas para obtener información acerca de compañías, coberturas, derechos o quejas al

1-800-252-3439

Puede escribir al Departamento de Seguros de Texas
P.O. Box 149104
Austin, TX 78714-9104
FAX # (512) 475-1771
Web: http://www.tdi.state.tx.us
E-mail: ConsumerProtection@tdi.state.tx.us

DISPUTAS SOBRE PRIMAS O RECLAMOS:

Si tiene una disputa concerniente a su prima o a un reclamo, debe comunicarse con el agente primero. Si no se resueve la disputa, puede entonces comunicarse con el departamento (TDI).

UNA ESTE AVISO A SU POLIZA:

Este aviso es solo para propósito de información y no se convierte en parte o condición del documento adjunto.

Fire Stations 5 & 11, Midland, TX
April 8, 2020

MWBuilders

Original Bid Information

ITEM	DESCRIPTION	Add	Deduct	Total
Base Bid	All work as shown on Drawings	$10,667,000		$10,667,000
Alt 1	All work identified with the Fueling Station	$630,000		$630,000
Alt 2	All work identified with the Wash Bay	$410,000		$410,000
			TOTAL BASE BID AND APPROVED ALTERNATES:	**$11,707,000**

Value Engineering / Voluntary Cost Pricing

ITEM	DESCRIPTION	@ 5	@ 11	Cost Reduction	Approved or Not Approved
	CIVIL / SITE WORK				
C1a	~~Station 5: Asphalt Pavement in Lieu of Concrete at Medium Duty Pavements Only~~	y		no savings	not approved
C1b	~~Station 11: Asphalt Pavement in Lieu of Concrete at Medium Duty Pavements Only~~		y	no savings	not approved
C2a	Station 5: Modify HD Pavement Section from 15 passes to 4 (amendment to geotechnical report and civil design required) - anticipating 5.5" over 4" base	y		-$3,011	-$3,011
C2b	Station 11: Modify HD Pavement Section from 15 passes to 4 (amendment to geotechnical report and civil design required) - anticipating 5.5" over 4" base		y	-$19,021	-$19,021
C2c	~~- or - Change all heavy duty rigid pavements to heavy duty asphalt pavements consult civil engineer for design of HD asphalt pavement section requirements~~	y	y	not recommended	not approved
C3	*Station 5: delete requirement for new pavement improvements in the alley - leave "as is" - provide asphalt patching only as needed for utilities*	y		-$13,545	*verify before 6/1/2020*
C4a	~~Station 11: recycled asphalt at temporary drive approach shown on sheet C222.~~ Not recommended.		y	not recommended	not approved
C4b	*- or - Station 11: delete temporary asphalt in entirety, trucks will exit at Golden Gate until City widens road*		y	-$35,830	*verify before 6/1/2020*
C5	~~Change from 5' moisture conditioning at Station 11 pad to ?~~ Not recommended.		y	not allowed	not approved
C6	~~Substitute an engineered triaxial geogrid in lieu of 2' moisture conditioning below pavements.~~ Not recommended.	y	y	no savings	not approved
C7	Adjust grades at NW corner of Station 11 site to allow for onsite material to be used for fills		y	-$3,700	-$3,700

C8	Incorporate site utility plan dated 3/17/2020 at Station 11		y	-$3,500	-$3,500
C9	Delete Gabion Wall and provide continuous Cedar Fence in lieu of Gabions @ Station 5	y		-$3,900	-$3,900
L1	Reductions to landscaping - delete container trees, provide nursery grown B&B (consultant can select)	y	y	-$41,772	-$41,772
L2	- And - in addition to the above, at Station 5: the following plants can be installed as a 1 gal in lieu of the specified 5 gal: Red Yucca, Gopher Plant, Silverado Sage; The Red Bird of Paradise can be installed as 1 gal in lieu of the specified 15 gal; The Beaked Yucca can be 2' tall in lieu of the specified 4' tall minimum height; Chinese Pistache can be 3" caliper in lieu of the specified 4" caliper; The 1/2" decomposed granite can be 1/2" Golden Brown from El Paso distributor	y		with L/1	w/L1
L3	- And - in addition to the above, at Station 11: the following plants can be installed as a 1 gal in lieu of the specified 5 gal: Red Yucca, Gopher Plant, Silverado Sage; The Red Bird of Paradise can be installed as 1 gal in lieu of the specified 15 gal; The Beaked Yucca can be 2' tall in lieu of the specified 4' tall minimum height; Chinese Pistache, Cedar Elm and Red Oak can each be 3" caliper in lieu of the specified 4" caliper; The limestone boulder size can be reduced to 2'x18"x3'; The 1/2" decomposed granite can be 1/2" Golden Brown from El Paso distributor; The 2" decomposed granite can be 2" Golden Brown from El Paso distributor; In lieu of hydroseeding the seeded areas, the seed can be drill-seeded.		y	with L/1	w/L1
	ARCHITECTURAL				
A1	Reconfigure Station 11 porch to relocate east HVAC condensors per Martinez drawings conveyed on 3/17, thus reducing the sidewalk slab recess and steel plate covering to approximately 5'x1'.		y	-$1,120	-$1,120
A2	At Station 11 porch, delete masonry wall at 4/A503 and substitute 6' h wood fencing		y	-$1,200	-$1,200
A3a	~~Delete hollow load bearing brick masonry @ Station 5, substitute colored split faced CMU @ exterior, and common CMU, painted, on interior, at apparatus bay~~	y		-$78,708	not approved
A3b	- or - Delete hollow load bearing brick masonry @ Station 5, substitute standard gray CMU @ exterior with full depth brick and natural stone veneer on exterior portions (similar to Station 11), and common CMU, painted, on interior, at apparatus bay	y		-$63,200	-$63,200
A4	~~Change from utility brick to modular econo brick~~	y	y	no savings	not approved
A5	~~Delete mortar mat, substitute mortar net and submit associated product data for review~~	y	y	no savings	not approved
A6a	~~Delete cast stone, substitute brick and metal flashing below metal wall panels~~	y	y	-$1,700	not approved
A6b	~~- Or - Substitute 4" cast stone instead of 10", and metal flashing below metal wall panels~~	y	y	-$675	not approved
A7	~~- And - Remove cast stone from exterior of apparatus bay at Station 5, infill with masonry~~	y		-$930	not approved
A8	~~Delete requirement for AWI Premium grade solid wood core millwork and allow white melamine interiors with MDF core in lieu of matching laminate interiors constructed to meet AWI Custom grade.~~	y	y	-$5,800	not approved
A9	~~Change solid surface countertops to laminate tops.~~	y	y	-$3,300	not approved

A10	24 ga. Double-Lok SSMR Roof System with Galvalume Finish in lieu of Kynar, with 2 yr Installation Warranty and 20 yr Warranty on Panel Finish	y	y	-$38,520	-$38,520
A11	Reduction to 4.9" nailbase (4.4" rigid insulation w/7/16" OSB Coverboard) and allow Polyglass MTS underlayment at SSMR	y	y	with A10	w/A10
A12	In addition to specified MBCI FW-120-1 wall panel and MBCI Artisan 12" soffit panel 1) allow use of 24 ga in lieu of 22 ga; 2) allow Berridge FW-1025 and FW-12 or PAC-Clad/equal wall and soffit panels (24 ga panels to have two stiffen ribs); and 3) allow installation over 22 ga 1-1/2" hat channels in lieu of 1" zee furring.	y	y	with A10	w/A10
A13a	Change from 80 mil TPO roof to 60 mil mechanically fastened TPO roof system w/4" Grade 2 20 psi ISO roof insulation, 1/2" Dens-Deck, 24 ga copings, 24 ga conductor heads/downspouts and TPO roof-related 24 ga sheet metal flashings.	y		with A10	w/A10
A13b	~~- And - Add to the above savings to change from 60 mil TPO roof to Durolast roof; which does not need cover board to achieve a Class A Fire and Severe Hail rating.~~	y		-$2,550	not approved
A14	Eliminate fire rated glazed openings - (4) frame 13's & frame 14's, (12) GL2 door lites @ D2 & D2A	y	y	-$21,574	-$21,574
A15a	Remove select areas of Curtain Wall and replace with Structural Supports, and reduce height of Storefront Windows/Spandrel Glass, replacing with the adjacent cladding and wall assembly.	y	y	-$9,000	see A15b
A15b	- Or - Remove select areas of Curtain Wall and replace with Structural Supports, and reduce area/height of Storefront Windows/Spandrel Glass, replacing with the adjacent cladding and wall assembly, as indicated by Martinez drawings conveyed on 3/17. Involves potentially multiple trades.	y	y	-$11,500	-$11,500
A16	~~Change to non-insulated sectional overhead doors at Station 11 north façade~~		y	-$2,000	not approved
A17	Replace bi-fold bay doors and replace with insulated sectional overhead doors at Stations 5 and 11, and with powder coat factory paint coating.	y	y	-$146,400	-$146,400
A18	~~Delete decorative sunshade louvered canopy and architectural brackets at Station 5 over Apparatus Bay doors~~	y		-$20,600	not approved
A19	Delete decorative sunshade louvered canopy over kitchen at Station 5	y		-$5,250	-$5,250
A20	Delete all decorative sunshade louvered canopies at Station 11		y	-$19,800	-$19,800
A21R	Delete furrdowns and ACT ceiling infill, reduce hard lid ceilings at living/dining/kitchen areas by replacing drywall lid ceilings with acoustical tile, per Martinez Architects drawings dated 3/30/20	y	y	-$7,710	-$7,710
A22	Delete Skudo Paper and Protection Board / Substitute Corrugated Wrap Roll Both Stations	y	y	-$25,000	-$25,000
A23	~~Minimize Wall Tile to Wet Walls Only (may be some but minimal - most walls appear to be wet walls) - would need details~~	y	y	minimal	not approved
A24	Change Centiva LVT to Armstrong Parallels 20	y	y	-$7,965	-$7,965
A25	Delete Stair Tread Coverings on stairs, and use sealed concrete at treads	y	y	-$9,590	-$9,590
A26	Delete Schluter Dilex base - straight wall tile to serve as base	y	y	-$7,710	-$7,710
A27	Delete security box locker, ~~coat hanger, glove hanger, helmet holder~~	y	y	-$2,700	-$2,700

A28	Change elevator to 2100 lb capacity, delete cab pads, reduce speed to 75 fpm	y		-$4,000	-$4,000
	STRUCTURAL				
S1	Remove Requirement for Certified Steel Erector	y	y	-$3,750	-$3,750
S2a	~~Replace Prefinished Brise Soleil and Guardrail with a field finished, high performance paint applied to prime painted steel brise soliel and aircraft cable guardrail at Station 5~~	y		no savings available	not approved
S2b	~~- Or - At Station 5 porch, delete Brise Soleil and Porch Railing, and in lieu thereof, add regular field painted primed steel pipe railing with horizontal aircraft cabling and extend exterior wall assembly and with metal panel clad soffit matching storefront elevation.~~ Not recommended.	y		no savings	not approved
S2c	- Or - At Station 5 porch, delete Brise Soleil and Porch Railing, and in lieu of Porch Railing, add regular field painted primed steel pipe railing with horizontal aircraft cabling.	y		-$10,500	-$10,500
S3	~~Delete Allowance per S101 note 20, unspecified type of steel for this project~~	y	y	-$4,800	not approved
S4	~~Delete decorative steel brackets at Station 11 over the bay doors and reduce roof overhang~~		y	-$6,000	not approved
S5	~~Delete concrete rappelling platform (framing and deck) and ladder at Station 5, but keep infrastructure steel to allow for potential future installation of platform.~~	y		-$3,915	not approved
S6	~~Delete rappeling bar on the TPO roof area and associated walkway protection from edge to bar, and associated cast stone, and substitute adjacent masonry/roof details.~~	y		-$1,200	not approved
S7	~~Delete firemen's slide~~	y		-$24,370	not approved
	PLUMBING				
P1a	~~Change to Schedule 40 PVC for sanitary waste and vent piping above grade, and add ducted returns~~	y	y	no savings	not approved
P1b	~~- or - Change to plenum rated stainless steel in lieu of cast iron above grade~~	y	y	no savings	not approved
P2	Use Schedule 40 PVC piping with solvent welded DWV fittings for all sanitary waste piping below slab.	y	y	-$71,410	-$71,410
P3	In lieu of Type L Copper pipe with soldered fittings for domestic water piping above grade in the building: a. Use Type L Copper with Pro Press fittings. Or b. Use PEX piping.	y	y	with P2	w/P2
P4a	~~Utilize cast-in-place drains in lieu of trench drains by plumber~~	y	y	no savings	not approved
P4b	- Or - Reduce trench drain width from 12" to 6"	y	y	-$2,200	-$2,200
P4c	~~- And - Move drains from center of bays to behind bay doors and slope the entire bay slab from the center down to the exterior doors at Station 5~~	y		no savings	not approved
P4d	~~- And - Move drains from center of bays to behind bay doors and slope the entire bay slab from the center down to the exterior doors at Station 11~~		y	no savings	not approved
	MECHANICAL				
M1a	~~Reconfigure Vehicle Exhaust Sliding Balancing Track @ Station 11 (i.e. becomes similar to Station 5) - caution: will require trucks back in and park~~		y	-$15,000	not approved

M1b	~~- or - Consider alternative vehicle exhaust system manufacturer - verify compatibility with City of Midland fleet of fire trucks~~	y	y	no savings	not approved
M1c	~~- or - Remove vehicle exhaust system in entirety, and this item becomes owner furnished, owner installed~~	y	y	-$118,895	not approved
M2	~~Use fibrous glass duct board for low pressure supply and return ductwork serving fan coil units.~~	y	y	no savings	not approved
M3	~~Add ducted returns and change to PVC above grade~~	y	y	no savings	not approved
M4	~~Use 8" diameter snap lock round sheet metal duct for outside air intake, in lieu of specified 6" x 6" rectangular duct.~~	y	y	no savings	not approved
M5	Change Test and Balance Spec from AABC Certification to also allow NEBB Certification	y	y	-$10,000	-$10,000
	ELECTRICAL				
E1	Use aluminum conductors for all panel feeders and branch circuits over 150 Amps (size 1/0 and larger conductors)	y	y	-$5,000	-$5,000
E2	Use MC cable for all branch circuit wiring where concealed above ceilings and in walls/partitions.	y	y	-$10,000	-$10,000
E3	Consider alternative light fixtures, to be proposed by lighting vendors, for a VE package of light fixtures and controls.	y	y	-$38,720	-$38,720
E4a	Alternative Generator - Allow Kohler and/or Generac 200KW gas generators in addition to CAT	y	y	-$40,500	-$40,500
E4b	~~- And - Reduce generator to 100KW (Station 6 has 100 KW genset) - will require electrical design confirmation~~	y	y	-$25,000	not approved
E4c	~~- Or - Use 100KW diesel engine generator in lieu of 200KW CAT natural gas generator - will require electrical design confirmation~~	y	y	-$40,000	not approved
E4d	~~- Or - Omit specified CAT 200KW gas generator and automatic transfer switch from project scope. Keep docking station in the project to allow for connecting a portable generator.~~	y	y	-$170,000	not approved
E5	Omit Lightning Protection from the scope of work.	y	y	-$30,000	-$30,000
E5	~~Delete Video Surveillance from the scope of the work.~~	y	y	-$35,277	not approved
E6	~~Delete Access Controls/Security Package from the scope of the work (no such scope at Station 6)~~	y	y	-$22,400	not approved
E7	~~Identify potential contractor-suggested savings in communications; cabling spec appears updated since Station 6 bid.~~	y	y	minimal	not approved
	MISCELLANEOUS				
R1	Delete Materials Testing Allowance from the contract amount	y	y	-$74,200	-$74,200
R2	Reduce Site Miscellaneous Allowance to $25,000 for the project	y	y	-$53,000	-$53,000
				TOTAL OF V.E. ITEMS, BASE BID:	**-$797,423**

	COST SAVINGS ASSOCIATED WITH ALTERNATES				
BA1a	*Verify fueling obligation at Station 11 to consider reduction to 20,000 gal split 10/10 diesel and gasoline tank with (1) Tecalemit 1,500 gal AST for DEF with (2) Fuelmaster Pedestals with HID reader and pin pad, and software installation on customer provided PC, all training and startup. Refer detailed proposal for scope.*		y	-$58,500	*verify before 6/1/2020*
BA1b	~~Change canopies associated with Alt 1 to prefabricated~~		y	no savings	not approved
BA1c	Alt 1: Modify HD Pavement Section from 15 passes to 4 (amendment to geotechnical report and civil design required) - anticipating 5.5" over 4" base incorporate landscaping savings, and change roofing as per A10 thru 12 above		y	-$9,777	-$9,777
BA2a	~~Change wash station from structural brick to colored split faced block~~		y	-$27,000	not approved
BA2b	~~- Or - Change wash station from structural brick to CMU with brick veneer~~		y	no savings	not approved
BA2c	~~Change canopies associated with Alt 2 to prefabricated~~		y	no savings	not approved
BA2d	Alt 2: Incorporate landscaping savings		y	-$300	-$300
				TOTAL OF V.E. ITEMS, ALTERNATES:	**-$10,077**

TOTAL APPROVED VALUE ENGINEERING IDENTIFIED ABOVE:	**-$807,500**

CONTRACT AMOUNT: BASE BID + APPROVED ALTERNATES + VALUE ENGINEERING:	**$10,899,500**

EXHIBIT C

Bonding Requirements

The successful bidder shall be required to furnish a Performance & Payment Bond* for bids in excess of $50,000.00, in an amount equal to one hundred percent (100%) of the total contract price, such bond to be executed in five (5) original counterparts by a Corporate Surety authorized to do business in the State of Texas and acceptable to the City of Midland. All bonds must be executed on forms contained in these contract documents. The form of agreement which the successful bidder, as contractor, will be required to execute is also included herewith. The form of agreement and the form of the bonds should be carefully examined by the bidder.

A certified check, cashier's check, bank money order, or irrevocable letter of credit issued by a bank satisfactory to the City, or a bidder's bond on the form provided, in the amount of five percent (5%) of the largest possible lump sum bid submitted, payable without recourse to the City, must accompany the bidder's proposal, as a guaranty that the bidder will enter a contract and execute the required payment bond and guaranty in the forms provided within fifteen (15) days after notice of award of contract to him. Bids or proposals without the required bid guaranty will not be considered. All bid sureties and payment bonds shall name the City of Midland as Obligee.

*A cash security such as a cashier's check or irrevocable letter of credit issued by a bank satisfactory to the City for 100 % of the contract amount may be supplied in lieu of the Performance and Payment Bonds. The check will be returned un-cashed upon satisfactory completion of the work and evidence of payment of all obligations due for the contract.

PAYMENT BOND

THE STATE OF TEXAS §

COUNTY OF MIDLAND § SURETY NO _____

KNOW ALL MEN BY THESE PRESENTS, THAT _____ of the City of _____ of the County of _____ and State of Texas as Principal, and _____, as Surety, are held and firmly bound unto the City of Midland, Texas, as Obligee, in the amount of _____ DOLLARS ($ _____) for the payment whereof the said Principal and Surety bind themselves, their heirs, administrators, executors, successors and assigns, jointly and severally, firmly by these presents.

WHEREAS, the Principal has entered into a certain written contract with the Obligee, dated the _____ day of _____, 20__, for the furnishing of materials, equipment to perform all labor and work necessary for _____, hereof as fully and to the same extent as if copied at length herein.

NOW, THEREFORE, the condition of the obligation is that if the said Principal shall pay all claimants supplying labor and material to him or a subcontractor in the prosecution of the work provided for in said contract, then this obligation shall be null and void; otherwise, it is to remain in full force and effect.

Surety, for value received, stipulates and agrees that no change, extension of time alteration or addition to the terms of the contract, or to the work performed there under, or the plans, specifications of drawings accompanying the same, or any assignment of the contract as may be provided for in the instructions to bidders, shall in anywise affect its obligation on this Bond, and it does waive notice of any such change, extension of

time, alteration or addition to the terms of the contract, assignment thereof, or to the work to be performed there under.

IN WITNESS WHEREOF the said Principal and Surety have signed and sealed this instrument, this _____ day of _____ , 20__ .

_____	_____
Principal	Surety
By _____	By _____
Address _____	Address _____
_____	_____
_____	_____

APPROVED AS TO FORM:

_____

City Attorney

NOTE: Attach Power of Attorney

PERFORMANCE BOND

THE STATE OF TEXAS §

COUNTY OF MIDLAND § SURETY NO _____

KNOW ALL MEN BY THESE PRESENTS, THAT _____ (Hereinafter called the Principal[s]), as Principal(s), and _____ (Hereinafter called the Surety), as Surety, are held and firmly bound unto the City of Midland, Texas a home rule municipal corporation of Midland County, Texas, (hereinafter called the Obligee), in the amount of _____ DOLLARS ($ _____) for the payment whereof the said Principal and surety bind themselves, and their heirs, administrators, executors, successors and assigns, jointly and severally, firmly by these presents.

WHEREAS, the Principal has entered into a certain written contract with the Obligee, dated the _____day of _____ , 20___ , for the furnishing of materials and equipment to perform all labor and work necessary for the construction of _____ , specifically including in the scope of this work and bond, the additional maintenance guaranty provisions set forth in the contract conditions, which contract is hereby referred to and made a part hereof as fully and to the same extent as if copies at length herein, as well as the Principal's primary obligation to perform according to plans and specifications.

NOW, THEREFORE, THE CONDITION OF THIS OBLIGATION IS SUCH, that if the said Principal shall faithfully perform the work in accordance with the plans, specifications, instructions to bidder, general and special conditions and other contract documents, including any addendum thereto, then this obligation shall be void; otherwise to remain in full force and effect.

PROVIDED further that if any legal action be filed upon this Bond venue shall lie in Midland County, State of Texas.

Surety, for value received, stipulates and agrees that no change, extension of time, alteration or addition to the terms of the contract, or to the work performed thereunder, or the plans, specifications or drawings accompanying the same, or any assignment of the contract as may be provided for in the instructions to bidders, shall in anywise affect its obligation on this Bond, and it does waive notice of any such change, extension of time, alteration or addition to the terms of the contract, assignment thereof, or the work to be performed thereunder.

IN WITNESS WHEREOF, the said Principal and surety do sign and seal this instrument, this _____ day of _____ , 20___.

_____	_____
Principal	Surety
By _____	By _____
Address _____	Address _____
_____	_____
_____	_____

APPROVED AS TO FORM:

_____
City Attorney

NOTE: Attach Power of Attorney

Form Revised August 2012

PerfB 2

"General Decision Number: TX20200261 01/03/2020

Superseded General Decision Number: TX20190261

State: Texas

Construction Type: Building

County: Midland County in Texas.

BUILDING CONSTRUCTION PROJECTS (does not include single family homes or apartments up to and including 4 stories).

Note: Under Executive Order (EO) 13658, an hourly minimum wage of $10.80 for calendar year 2020 applies to all contracts subject to the Davis-Bacon Act for which the contract is awarded (and any solicitation was issued) on or after January 1, 2015. If this contract is covered by the EO, the contractor must pay all workers in any classification listed on this wage determination at least $10.80 per hour (or the applicable wage rate listed on this wage determination, if it is higher) for all hours spent performing on the contract in calendar year 2020. If this contract is covered by the EO and a classification considered necessary for performance of work on the contract does not appear on this wage determination, the contractor must pay workers in that classification at least the wage rate determined through the conformance process set forth in 29 CFR 5.5(a)(1)(ii) (or the EO minimum wage rate, if it is higher than the conformed wage rate). The EO minimum wage rate will be adjusted annually. Please note that this EO applies to the above-mentioned types of contracts entered into by the federal government that are subject to the Davis-Bacon Act itself, but it does not apply to contracts subject only to the Davis-Bacon Related Acts, including those set forth at 29 CFR 5.1(a)(2)-(60). Additional information on contractor requirements and worker protections under the EO is available at www.dol.gov/whd/govcontracts.

Modification Number	Publication Date
0	01/03/2020

BOIL0074-003 01/01/2017

	Rates	Fringes
BOILERMAKER	$ 28.00	22.35

ENGI0178-005 06/01/2014

	Rates	Fringes
POWER EQUIPMENT OPERATOR		
(1) Tower Crane	$ 29.00	10.60
(2) Cranes with Pile Driving or Caisson Attachment and Hydraulic Crane 60 tons and above	$ 28.75	10.60
(3) Hydraulic cranes 59 Tons and under	$ 27.50	10.60

* IRON0084-011 06/01/2019

	Rates	Fringes
IRONWORKER, ORNAMENTAL	$ 24.42	7.12

---

* PLUM0404-001 09/01/2019

	Rates	Fringes
PLUMBER	$ 25.55	8.56

SUTX2014-037 07/21/2014

	Rates	Fringes
BRICKLAYER	$ 20.00	0.00
CARPENTER	$ 13.82	0.00
CEMENT MASON/CONCRETE FINISHER	$ 13.76	0.00
ELECTRICIAN	$ 23.18	6.31
INSULATOR - MECHANICAL (Duct, Pipe & Mechanical System Insulation)	$ 19.77	7.13
IRONWORKER, REINFORCING	$ 12.27	0.00
IRONWORKER, STRUCTURAL	$ 22.16	5.26
LABORER: Common or General	$ 11.80	0.00
LABORER: Mason Tender - Brick	$ 11.38	0.00
LABORER: Mason Tender - Cement/Concrete	$ 10.58	0.00
LABORER: Pipelayer	$ 12.49	2.13
LABORER: Roof Tearoff	$ 11.28	0.00
OPERATOR: Backhoe/Excavator/Trackhoe	$ 14.25	0.00
OPERATOR: Bobcat/Skid Steer/Skid Loader	$ 13.93	0.00
OPERATOR: Bulldozer	$ 18.29	1.31
OPERATOR: Drill	$ 16.22	0.34
OPERATOR: Forklift	$ 14.83	0.00
OPERATOR: Grader/Blade	$ 13.37	0.00
OPERATOR: Loader	$ 13.55	0.94
OPERATOR: Mechanic	$ 17.52	3.33
OPERATOR: Paver (Asphalt, Aggregate, and Concrete)	$ 16.03	0.00
OPERATOR: Roller	$ 12.70	0.00

PAINTER (Brush, Roller, and Spray).....$ 15.00 0.73

PIPEFITTER.....$ 25.80 8.55

ROOFER.....$ 14.75 0.00

SHEET METAL WORKER (HVAC Duct Installation Only).....$ 22.73 7.52

SHEET METAL WORKER, Excludes HVAC Duct Installation.....$ 19.50 0.00

TILE FINISHER.....$ 11.22 0.00

TILE SETTER.....$ 14.74 0.00

TRUCK DRIVER: Dump Truck.....$ 12.39 1.18

TRUCK DRIVER: Flatbed Truck.....$ 19.65 8.57

TRUCK DRIVER: Semi-Trailer Truck.....$ 12.50 0.00

TRUCK DRIVER: Water Truck.....$ 12.00 4.11

WELDERS - Receive rate prescribed for craft performing operation to which welding is incidental.

==========

Note: Executive Order (EO) 13706, Establishing Paid Sick Leave for Federal Contractors applies to all contracts subject to the Davis-Bacon Act for which the contract is awarded (and any solicitation was issued) on or after January 1, 2017. If this contract is covered by the EO, the contractor must provide employees with 1 hour of paid sick leave for every 30 hours they work, up to 56 hours of paid sick leave each year. Employees must be permitted to use paid sick leave for their own illness, injury or other health-related needs, including preventive care; to assist a family member (or person who is like family to the employee) who is ill, injured, or has other health-related needs, including preventive care; or for reasons resulting from, or to assist a family member (or person who is like family to the employee) who is a victim of, domestic violence, sexual assault, or stalking. Additional information on contractor requirements and worker protections under the EO is available at www.dol.gov/whd/govcontracts.

Unlisted classifications needed for work not included within the scope of the classifications listed may be added after award only as provided in the labor standards contract clauses (29CFR 5.5 (a) (1) (ii)).

The body of each wage determination lists the classification and wage rates that have been found to be prevailing for the cited type(s) of construction in the area covered by the wage determination. The classifications are listed in alphabetical order of ""identifiers"" that indicate whether the particular rate is a union rate (current union negotiated rate for local),

a survey rate (weighted average rate) or a union average rate (weighted union average rate).

Union Rate Identifiers

A four letter classification abbreviation identifier enclosed in dotted lines beginning with characters other than ""SU"" or ""UAVG"" denotes that the union classification and rate were prevailing for that classification in the survey. Example: PLUM0198-005 07/01/2014. PLUM is an abbreviation identifier of the union which prevailed in the survey for this classification, which in this example would be Plumbers. 0198 indicates the local union number or district council number where applicable, i.e., Plumbers Local 0198. The next number, 005 in the example, is an internal number used in processing the wage determination. 07/01/2014 is the effective date of the most current negotiated rate, which in this example is July 1, 2014.

Union prevailing wage rates are updated to reflect all rate changes in the collective bargaining agreement (CBA) governing this classification and rate.

Survey Rate Identifiers

Classifications listed under the ""SU"" identifier indicate that no one rate prevailed for this classification in the survey and the published rate is derived by computing a weighted average rate based on all the rates reported in the survey for that classification. As this weighted average rate includes all rates reported in the survey, it may include both union and non-union rates. Example: SULA2012-007 5/13/2014. SU indicates the rates are survey rates based on a weighted average calculation of rates and are not majority rates. LA indicates the State of Louisiana. 2012 is the year of survey on which these classifications and rates are based. The next number, 007 in the example, is an internal number used in producing the wage determination. 5/13/2014 indicates the survey completion date for the classifications and rates under that identifier.

Survey wage rates are not updated and remain in effect until a new survey is conducted.

Union Average Rate Identifiers

Classification(s) listed under the UAVG identifier indicate that no single majority rate prevailed for those classifications; however, 100% of the data reported for the classifications was union data. EXAMPLE: UAVG-OH-0010 08/29/2014. UAVG indicates that the rate is a weighted union average rate. OH indicates the state. The next number, 0010 in the example, is an internal number used in producing the wage determination. 08/29/2014 indicates the survey completion date for the classifications and rates under that identifier.

A UAVG rate will be updated once a year, usually in January of each year, to reflect a weighted average of the current negotiated/CBA rate of the union locals from which the rate is based.

WAGE DETERMINATION APPEALS PROCESS

1.) Has there been an initial decision in the matter? This can be:

* an existing published wage determination
* a survey underlying a wage determination
* a Wage and Hour Division letter setting forth a position on a wage determination matter
* a conformance (additional classification and rate) ruling

On survey related matters, initial contact, including requests for summaries of surveys, should be with the Wage and Hour Regional Office for the area in which the survey was conducted because those Regional Offices have responsibility for the Davis-Bacon survey program. If the response from this initial contact is not satisfactory, then the process described in 2.) and 3.) should be followed.

With regard to any other matter not yet ripe for the formal process described here, initial contact should be with the Branch of Construction Wage Determinations. Write to:

Branch of Construction Wage Determinations
Wage and Hour Division
U.S. Department of Labor
200 Constitution Avenue, N.W.
Washington, DC 20210

2.) If the answer to the question in 1.) is yes, then an interested party (those affected by the action) can request review and reconsideration from the Wage and Hour Administrator (See 29 CFR Part 1.8 and 29 CFR Part 7). Write to:

Wage and Hour Administrator
U.S. Department of Labor
200 Constitution Avenue, N.W.
Washington, DC 20210

The request should be accompanied by a full statement of the interested party's position and by any information (wage payment data, project description, area practice material, etc.) that the requestor considers relevant to the issue.

3.) If the decision of the Administrator is not favorable, an interested party may appeal directly to the Administrative Review Board (formerly the Wage Appeals Board). Write to:

Administrative Review Board
U.S. Department of Labor
200 Constitution Avenue, N.W.
Washington, DC 20210

4.) All decisions by the Administrative Review Board are final.

===

END OF GENERAL DECISION
"

CITY OF MIDLAND FIRE DEPARTMENT
5

CITY OF MIDLAND
FIRE DEPARTMENT

CITY OF MIDLAND

PROPOSED FIRE STATIONS
NO. 5 & 11

PROJECT MANUAL

Project No.
MA 18017

ISSUED FOR APPROVAL TO BID

01-16-2020

martinez
ARCHITECTS

PROJECT MANUAL

Project No. MA 18017

January 16, 2020

CITY OF MIDLAND

PROPOSED FIRE STATION NO. 5
2210 W Golf Course Rd
Midland, Texas 79701

PROPOSED FIRE STATION NO. 11
6600 Briar Wood Avenue
Midland, Texas 79707

Architect
Martinez Architects
900 Rockmead Dr., Suite 250
Houston, Texas 77339
281.346.7371

Civil Engineer
Maverick Engineering
1909 West Wall St, Suite K
Midland, Texas 79701
432.262.0999

Landscape Architect
KDC Associates
4400 N Big Soring, Suite 203
Midland, Texas 79705
432.686.8001

Structural Engineer
Matrix Structural Engineers
5177 Richmond Ave., Suite 670
Houston, TX 77056
713.664.0130

M/E/P/T Engineer
DBR
8626 Tesoro Dr. Suite 702
San Antonio, Texas 77217
210.546.0200

DOCUMENT 00 01 10

TABLE OF CONTENTS

PROCUREMENT AND CONTRACTING REQUIREMENTS GROUP

DIVISION 00 – PROCUREMENT AND CONTRACTING REQUIREMENTS

INTRODUCTORY INFORMATION

00 01 01 .....Title Page
00 01 10 .....Table of Contents

PROCUREMENT REQUIREMENTS

00 21 13 .....Instruction to Bidders/Bid Forms
00 31 32 .....Geotechnical Data
.....Geotechnical Report
00 31 50 .....Independent Testing Agency Approvals

CONTRACTING REQUIREMENTS

00 72 13.....General Conditions
00 73 43 .....Prevailing Wage Rates

SPECIFICATIONS GROUP

GENERAL REQUIREMENTS SUBGROUP

DIVISION 01 – GENERAL REQUIREMENTS

01 11 00 .....Summary of Work
01 16 00 .....Product Requirements
01 21 00 .....Allowances
01 22 00 .....Unit Prices
01 25 13.....Product Substitution Procedures
01 25 13.1 .....Product Substitution Procedures Form
01 26 00.....Contract Modification Procedures
01 26 13..... Request for Interpretation
01 26 13.1 .....Request for Interpretation Form
01 29 00 .....Payment Procedures
01 31 00.....Project Management and Coordination
01 31 06 .....Coordination Drawings
01 31 06.1…… Electronic Transfer Document
01 31 19…… Project Meetings
01 32 16.....Construction Progress Schedule
01 32 23 .....Survey and Layout Data
01 33 00.....Submittal Procedures
01 35 16.....Alteration Project Procedures
01 41 00 .....Regulatory Requirements
01 42 00.....Definitions and Abbreviations
01 43 00 .....Inspection and Testing Laboratory Services
01 50 00 .....Temporary Facilities and Controls
01 55 13.....Stabilized Construction Exit
01 55 13.10 .....Stabilized Construction Access
01 55 26.....Traffic Control
01 57 00 .....Source Controls
01 57 10.....TPDES Requirements
01 57 13.....Filter Fabric Fence
01 57 19.....Ground Control and Surface Water
01 57 23 .....Temporary Storm Water Pollution Control
01 60 00.....Materials and Equipment
01 72 00.....Common Execution Requirements
01 73 29 .....Cutting and Patching
01 74 16 .....Site Maintenance
01 74 19.....Construction Waste Management Disposal
01 77 00 .....Closeout Procedures
01 78 23 ..... Operation and Maintenance Data
01 79 00.....Demonstration and Training
01 91 13 .....General Commissioning Requirements

FACILITY CONSTRUCTION SUBGROUP

DIVISION 02 – EXISTING CONDITIONS

02 55 00 .....Remediation Soil Stabilization

DIVISION 03 – CONCRETE

03 30 00 .....Cast-In-Place Concrete
03 66 00 .....Special Concrete Floor Finishes
03 66 00.1 .....Special Concrete Floor Finishes Form

DIVISION 04 – MASONRY

04 20 00 .....Unit Masonry
04 21 00 .....Brick Masonry
04 72 00 .....Cast Stone Unit Masonry

DIVISION 05 – METALS

05 40 00 .....Cold-Formed Metal Framing
05 50 00 .....Metal Fabrications
05 51 33 .....Metal Wall Ladder

DIVISION 06 – WOOD, PLASTICS, AND COMPOSITES

06 10 00 .....Rough Carpentry
06 16 00 .....Sheathing
06 40 10 .....Interior Architectural Millwork
06 65 00 .....Simulated Wood Products
06 82 00 .....Glass Fiber Reinforced Plastic

DIVISION 07 – THERMAL AND MOISTURE PROTECTION

07 11 13 .....Bituminous Dampproofing
07 18 20 .....Penetrating Floor Sealer
07 21 00 .....Thermal Insulation
07 25 00 .....Weather Barrier
07 26 16 .....Below-Grade Vapor Retarder
07 41 13 .....Metal Roof Panels
07 42 13 .....Metal Wall Panels
07 54 22 .....Thermoplastic Polyefin (TPO) Roofing
07 62 00 .....Sheet Metal Flashing and Trim
07 71 23 .....Manufactured Gutter and Downspouts
07 84 13 .....Firestopping
07 92 00 .....Joint Sealants

DIVISION 08 – OPENINGS

08 11 13 .....Hollow Metal Doors and Frames
08 14 23 .....Plastic-Laminate-Faced Wood Doors

08 31 13 .....Access Doors
08 35 13 .....Four Fold Doors
08 36 00 .....Sectional Overhead Doors
08 71 00 .....Door Hardware
08 74 00 .....Access Control
08 80 00 .....Glazed Systems
08 91 00 .....Metal Louvers

DIVISION 09 – FINISHES

09 21 16 .....Gypsum Board Assemblies
09 30 13 .....Ceramic Tile
09 51 00 .....Acoustical Ceiling
09 65 00 .....Resilient Flooring
09 91 00 .....Painting

DIVISION 10 – SPECIALTIES

10 14 00 .....Signage & Graphics
10 26 00 .....Wall Door Protection
10 28 13 .....Toilet Accessories
10 44 00 .....Fire Extinguishers and Cabinets
10 50 30 .....Turnout Gear Lockers Wall Mounted
10 73 16 .....Aluminum Canopies
10 75 00 .....Flagpoles
10 99 00 .....Miscellaneous Specialties

DIVISION 11 – EQUIPMENT

11 23 00 .....Commercial Laundry Equipment
11 30 00 .....Residential Appliances

DIVISION 12 – FURNISHINGS

12 21 00 .....Horizontal Louver Blinds

DIVISION 13 – 20 (Not Used)

DIVISION 21

21 00 00 .....Fire Protection
21 05 29 .....Hangers and Supports for Fire Suppression Piping and Equipment
21 13 13 .....Wet Pipe Sprinkler System
21 30 00 .....Fire Pumps
21 41 00 .....Storage Tanks for Fire-Suppression Water

DIVISION 22

22 02 00 .....Basic Materials and Methods
22 05 13 .....Common Motor Requirements for Plumbing Equipment

22 05 16.....Expansion Fittings and Loops for Plumbing Piping
22 05 29.....Hangers and Support for Plumbing Piping and Equipment
22 05 48.....Vibration and Seismic Controls for Plumbing Piping
22 05 53.....Identification for Plumbing Piping and Equipment
22 07 19.....Plumbing and Piping Insulation
22 08 00.....Commissioning of Plumbing Systems
22 10 00.....Plumbing Piping
22 11 19.....Plumbing Specialties
22 11 21.....Natural Gas Piping Systems
22 30 00.....Plumbing Equipment
22 40 00.....Plumbing Fixtures
22 61 00.....Compressed Air Systems
22 66 59.....Fire Hall Emergency Shutoff

DIVISION 23

23 02 00.....Basic Materials and Methods
23 05 13.....Common Motor Requirements for HVAC Equipment
23 05 16.....Expansion Fittings and Loops for HVAC Piping
23 05 29.....Hangers and Support for HVAC Piping and Equipment
23 05 48.....Vibration and Seismic Controls for HVAC Piping and Equipment
23 05 53.....Identification for HVAC Piping and Equipment
23 05 93.....Testing, Adjusting, and Balancing
23 07 13.....Duct Insulation
23 07 16.....HVAC Equipment Insulation
23 07 19.....HVAC Piping Insulation
23 08 00.....Commissioning of HVAC Systems
23 21 13.....Above Ground Hydronic Piping
23 23 00.....Refrigerant Piping
23 31 13.....Metal Ductwork
23 33 00.....Ductwork Accessories
23 34 00.....HVAC Fans
23 35 00.1.....Vehicle Exhaust Removal System – Station #5
23 35 00.2.....Vehicle Exhaust Removal System – Station #11
23 37 13.....Air Distribution Devices
23 41 00.....Air Filters
23 51 00.....Breechings, Chimneys, and Stacks
23 51 26.....Flue Pipe Systems
23 55 00.....Fuel Fired Unit Heaters
23 62 13.....Air Cooled Condensing Units
23 81 26.....Packaged Wall Mounted Air Conditioning Unit
23 81 43.....Variable Refrigerant Flow (VRF) for HVAC System
23 82 19.....Fan Coil Unit

DIVISION 26

26 02 00.....Basic Materials and Methods
26 05 19.....Wire, Cable and Related Materials
26 05 26.....Grounding

26 05 33 .....Raceways
26 08 00 .....Commissioning Electrical Systems
26 24 16 .....Panel Boards
26 27 26 .....Wiring Devices
26 28 10 .....Class J Fuses
26 28 16 .....Safety and Disconnect Switches
26 29 01 .....Manual Motors Starters
26 29 26 .....Miscellaneous Electrical Controls and Wiring
26 32 13 16 .....(200 kW) Natural Gas Engine Driven Standby Engine Generating System
26 41 13 13 .....Lightning Protection System for Low Rise
26 43 13 13 .....Surge Protective Devices – Standard Interrupting
26 51 00 13 .....Lightning Fixtures (LED)

DIVISION 27

27 00 00 .....Communications
27 05 26 .....Grounding and Bonding for Communications Systems
27 05 28 .....Pathways for Communications Systems
27 05 43 .....Underground Ducts and Raceways for Communications
27 11 00 .....Communications Equipment Room Fittings
27 15 00 .....Communications Horizontal Cabling
27 41 31 .....CATV System

DIVISION 28

28 00 00 .....Electronic Security
28 10 00 .....Access Control and Intrusion
28 23 00 .....Video Surveillance
28 31 00 .....Fire Alarm and Smoke Detection System

DIVISION 31 – EARTHWORK

31 11 00 .....Clearing and Grubbing
31 11 10 .....Waste Material Disposal
31 23 13 .....Grading and Compaction of Subgrade
31 23 33 .....Excavation Trenching and Backfill
31 23 34 .....Trench Safety System
31 24 13 .....Embankment
31 31 16 .....Termite Control

DIVISION 32 – EXTERIOR IMPROVEMENTS

32 13 12 .....Hot Mix Asphaltic Concrete Pavement
32 13 13 .....Concrete Paving
32 16 00 .....Concrete Curbs
32 17 13 .....Concrete Wheel Stops
32 17 23 .....Pavement Marking Materials

32 20 10 .....Concrete Sidewalks
32 31 13 .....Chain Link Fencing

DIVISION 33 – UTILITIES

33 10 00 .....Water Distribution Mains
33 30 00 .....Sanitary Sewers

DIVISION 34 – 49 (Not Used)

END OF TABLE OF CONTENTS
END OF 00 01 10

Contractor's Name

PROPOSAL
RFP #20002150

To: Purchasing Manager
City of Midland
Midland, Texas

1.1 Advertisement

A. The City of Midland is soliciting proposals to award a construction contract as herein described for the purpose defined in this document. By responding to this invitation, the parties providing Proposals (referred to herein as "Offerors", "Bidders" or "Proposers") agree to perform in accordance with the terms and conditions set forth in this document in the event that the response is selected for contract award regardless of whether award is made in whole or part.

B. The City of Midland ("Owner") has contracted Martinez Architects, LP ("Architect"), 900 Rockmead Dr, Suite 250, Kingwood, Texas 77339, to design a two new fire stations.

C. It is the intention of the City of Midland (the "Owner") to select via a Competitive Sealed Proposal process a General Contractor ("GC") to enter into agreement for construction services.

1.2 Scope of Work

A. The Project will consist of the construction of two fire stations, Fire Station No. 5 is a two story structure, approximately 11,752 square feet; and Fire Station No. 11 is a one story structure, that is approximately 13,208 square feet, which will house fire department personnel by providing office, living, sleeping, work, and vehicle storage areas. The address of the projects are the following: Fire Station No. 5 is located at 2210 W Golf Course Rd, Midland, Texas 79701, and Fire Station No.11 is located at 6600 Briar Wood Ave, Midland, Texas 79707. Full Scope of Work is described within the drawings and specifications, available by request from Martinez Architects, and made available from Associated General Contractors, McGraw Hill Construction/Dodge, and Virtual Builders Exchange.

1.3 Selection Criteria

A. The Owner reserves the right to reject any and all Proposals. Proposals not submitted in accordance with the Request for Proposal requirements shall not be scored or considered. No late submissions shall be considered.

B. Selection criteria shall include an analysis of the following (reference section 2.1 for additional information):
   A. (5 Points) Safety Experience
   B. (40 Points) Fee
   C. (20 Points) Construction Experience
   D. (10 Points) References
   E. (20 Points) Experience of Proposed Personnel
   F. (5 Points) Other Factors
   G. (50 Points) Interview Evaluation

1.4 Schedule

A. Proposals will be accepted no later than 2:00 p.m. on Wednesday, February 26, 2020.

B. On or after 2:00 p.m. on Wednesday, February 26, 2020, a representative of the City shall publicly open and read aloud the names of the proposers.

C. The top 3 Proposers will be notified within Two (2) Weeks to interview with the Building Committee of the City of Midland, their legal counsel, and Architect.

D. Thereafter, the City of Midland will select a firm at a subsequent City meeting based on the response the selection criteria and interview evaluation.

E. Construction is currently anticipated April 2020 – April 2021.

1.5 Instruction to Proposers

A. Proposals will be accepted no later than 2:00 p.m. on Wednesday, February 26, 2020 at the office of the City of Midland, Texas, City Secretary's Office: 300 N Lorraine, Suite 330, Midland, Texas 79702. Mailing Address is City of Midland, Texas, City Secretary's Office, Suite 330, PO Box 1152, Midland, TX 79702.

B. Offerors shall submit in a sealed package Seven (7) bound copies and One (1) electronic copy of the information requested as prescribed in Section 1.3, Selection Criteria A and B (a thru g), in the same sequence as listed.
   1) Only one (1) copy of the completed Bid Proposal Form (criteria B) shall be submitted in a separate sealed envelope.
   2) In addition to and separate from the requested information, organizations submitting proposals may provide supplementary materials further describing their capabilities and experience.

C. Sealed package shall be clearly labeled:
   City of Midland – Fire Stations No. 5 & 11
   RE: Request for Competitive Sealed Proposals for General Contractor
   City of Midland
   DO NOT OPEN UNTIL 2:00 P.M. ON February 26, 2020

1.6 Inquiries

A. Queries about the project and the request for proposals should be addressed to:
   Mr. Ricardo Martinez
   Martinez Architects, LP
   900 Rockmead Dr, Suite 250
   Houston, Texas 77339
   Phone: 281-346-7371
   Email: ricardom@martinez-architects.com

B. Queries must be received no later than 5:00 p.m. on Friday February 21, 2020.

2.1 Selection Criteria

A. The City of Midland has approved the following selection criteria for use in the selection process for a General Contractor to enter into agreement for construction services:

A. **5 Points - Safety Experience**
   A. Defined and scored based on demonstrated safety factors from previous similar projects, EMR, Loss Indicator Rate (LIR), workers' compensation history and Construction Safety Management procedures.

B. **40 Points – Fee Proposal**
   A. Defined and scored based on Construction Service Fee, General Conditions and other Compensation for a complete and operational facility. All material, equipment and/or parts that will become a portion of the completed work including items not specifically stated herein but necessary to render the construction services complete are to be included in the bid price.

C. **20 Points – Contractor Experience**
   A. Defined and scored based on having recent experience successfully Constructing and/or Renovating Public Safety Facilities. Fire Stations and similar facilities shall be weighted higher for this category for the overall score.

D. **10 Points – References**
   A. Provide a minimum of five (5) references. A minimum of (1) Owner and (1) Architect reference submitted shall be representative of a project similar in size and scope. The quality of references shall be weighted for this category for the overall score.

E. **20 Points – Experience of Proposed Personnel**
   A. Defined and scored based on related experience and expertise of the following proposed personnel:
      A. Estimator
      B. Project Manager
      C. Superintendent

      Note: The successful proposer is required to utilize the same personnel proposed throughout the duration of the project, unless permission is granted by the owner for a substitution in personnel.

F. **5 Points – Other Factors**
   A. Defined and scored based on change control procedures, financial stability of the company, and past demonstrated ability to complete past projects within budget and on schedule.

G. **50 Points – Interview Evaluation**
   B. Defined and scored based on presentation and response to questions posed by Building Committee. Proposer shall clearly articulate why the proposed team is best suited for this particular project including understanding of the project, approach by key personnel, evaluation of key trades and subcontractors, etc.

H. **150 Points - Total**

BID WAIVERS:

A. <u>WAIVER OF ATTORNEY FEES</u>: BY SIGNING THIS PROPOSAL, BIDDER AGREES TO WAIVE AND DOES HEREBY KNOWINGLY, CONCLUSIVELY, VOLUNTARILY AND INTENTIONALLY WAIVE ANY CLAIM IT HAS OR MAY HAVE IN THE FUTURE AGAINST THE CITY, REGARDING THE AWARD OF ATTORNEY'S FEES, WHICH ARE IN ANY WAY RELATED TO THE CONTRACT, OR THE CONSTRUCTION, INTERPRETATION OR BREACH OF THE CONTRACT. THE BIDDER SPECIFICALLY AGREES THAT IF THE BIDDER BRINGS OR COMMENCES ANY LEGAL ACTION OR PROCEEDING RELATED TO THIS CONTRACT, THE CONSTRUCTION, INTERPRETATION, VALIDITY OR BREACH OF THIS CONTRACT, INCLUDING BUT NOT LIMITED TO ANY ACTION PURSUANT TO THE PROVISIONS OF THE TEXAS UNIFORM DECLARATORY JUDGMENTS ACT (TEXAS CIVIL PRACTICE AND REMEDIES CODE SECTION 37.001, ET SEQ., AS AMENDED), OR CHAPTER 271 OF THE TEXAS LOCAL GOVERNMENT CODE, THE BIDDER AGREES TO ABANDON, WAIVE AND RELINQUISH ANY AND ALL RIGHTS TO THE RECOVERY OF ATTORNEY'S FEES TO WHICH BIDDER MIGHT OTHERWISE BE ENTITLED.

BIDDER AGREES THAT THIS IS THE VOLUNTARY AND INTENTIONAL RELINQUISHMENT AND ABANDONMENT OF A PRESENTLY EXISTING KNOWN RIGHT. THE BIDDER ACKNOWLEDGES THAT IT UNDERSTANDS ALL TERMS AND CONDITIONS OF THE CONTRACT. THE BIDDER FURTHER ACKNOWLEDGES AND AGREES THAT THERE WAS AND IS NO DISPARITY OF BARGAINING POWER BETWEEN THE CITY AND THE BIDDER. THIS SECTION SHALL NOT BE CONSTRUED OR INTERPRETED AS A WAIVER OF SOVEREIGN IMMUNITY.

THE BIDDER AND THE CITY ARE RELYING ON THEIR OWN JUDGMENT. EACH PARTY HAD THE OPPORTUNITY TO DISCUSS THIS CONTRACT WITH COMPETENT LEGAL COUNSEL PRIOR TO ITS EXECUTION.

B. WAIVER: BY SUBMITTING A BID, THE BIDDER AGREES TO WAIVE AND DOES HEREBY VOLUNTARILY AND INTENTIONALLY WAIVE, ABANDON AND RELINQUISH ANY CLAIM THE BIDDER HAS OR MAY HAVE IN THE FUTURE AGAINST THE CITY OF MIDLAND, TEXAS, AND THE CITY'S EMPLOYEES, AGENTS AND OFFICERS, ARISING OUT OF OR IN ANY WAY CONNECTED WITH THE FOLLOWING:

1. **THE ADMINISTRATION, EVALUATION OR RECOMMENDATION OF ANY BID;**
2. **WAIVER OR DELETION OF ANY OF THE REQUIREMENTS UNDER THE BID DOCUMENTS OR THE CONTRACT DOCUMENTS;**
3. **ACCEPTANCE OR REJECTION OF ANY BIDS; OR**
4. **AWARD OF THE CONTRACT.**

BY SUBMITTING A BID, THE BIDDER ACKNOWLEDGES THAT THE BIDDER UNDERSTANDS ALL OF THE TERMS OF THE BIDDING DOCUMENTS AND CONSENTS TO THE BIDDING PROCESS AND THE POSSIBILITY OF A NEGATIVE ASSESSMENT. BY SUBMITTING A BID, THE BIDDER ACKNOWLEDGES AND AGREES THAT THERE WAS AND IS NO DISPARITY OF BARGAINING POWER BETWEEN THE BIDDER AND THE CITY OF MIDLAND, TEXAS. THE BIDDER AGREES THAT THIS IS THE INTENTIONAL RELINQUISHMENT OF A PRESENTLY EXISTING KNOWN RIGHT. BY SIGNING THE

REQUEST FOR BID AND/OR BELOW, YOUR COMPANY AGREES TO THE ABOVE WAIVER(S).

C. Notice of Alleged Breach; Statutory Prerequisites: As a condition precedent to filing suit for alleged damages incurred by an alleged breach of an express or implied provision of this Contract, Bidder or his legal representative, shall give the City Manager, or any other reasonable official of the City, notice in writing (consisting of one original and seven copies of notice attached to a copy of this Contract) of such damages, duly verified, within one-hundred fifty (150) days after the same has been sustained. The discovery rule does not apply to the giving of this notice. The notice shall include when, where and how the damages occurred, the apparent extent thereof, the amount of damages sustained, the amount for which the Bidder will settle, the physical and mailing addresses of Bidder at the time and date the claim was presented and the physical and mailing addresses of Bidder for the six months immediately preceding the occurrence of such damages, and the names and addresses of the witnesses upon whom the Bidder relies to establish its claim; and a failure to so notify the City Manager within the time and manner provided herein shall exonerate, excuse and except the City from any liability whatsoever. The City is under no obligation to provide notice to Bidder that Bidder's notice is insufficient. The City reserves the right to request reasonable additional information regarding the claim. Said additional information shall be supplied within thirty (30) days after receipt of notice.

The statutory prerequisites outlined herein constitute jurisdictional requirements pursuant to Section 271.154 of the Texas Local Government Code and Section 311.034 of the Texas Government Code. Notwithstanding any other provision, Bidder's failure to comply with the requirements herein shall perpetually bar Bidder's claim for damages under Chapter 271 of the Texas Local Government Code, and Section 311.034 of the Texas Government Code, regardless if the City has actual or constructive notice or knowledge of said claim or alleged damages. Bidder agrees that the requirements of this entire Contract are reasonable.

By Signing below, your company agrees to the above waiver(s). If this form is not signed and included with your bid documents your bid will be considered non-responsive and will be rejected.

SOVEREIGN IMMUNITY: By Executing this contract the City is not waiving its right of Sovereign immunity. the City is retaining its IMMUNITY from suit. the City is not granting consent to be sued by legislative resolution or action.

THERE IS NO WAIVER OF SOVEREIGN IMMUNITY.

Bidder	Authorized Signature	Telephone
Address, City and State	Please Print above Name	Fax

Bidder's Enclosure Check List: (Bidder - Please review the following list and check to ensure that you have included the documents with your bid.)

☐ PROOF OF AUTOMOBILE, WORKER'S COMPENSATION AND GENERAL LIABILITY INSURANCE COVERAGE AS REQUIRED BY THE TERMS OF THE CONTRACT. (**Upon award and prior to execution of the contract The City of Midland will have to be added to the policy as an additional insured and a certificate issued reflecting that provision) including a waiver of subrogation as stated in the contract)**

PLEASE NOTE:

FAILURE TO INCLUDE ANY OF THE REQUIRED DOCUMENTS ON THE CHECK LIST, MAY CAUSE REJECTION OF YOUR BID.

***FAILURE TO PROVIDE LIABILITY OR WORKER'S COMPENSATION INSURANCE AND SUBSEQUENT CERTIFICATES; OR, PAYMENT AND/OR PERFORMANCE BONDS AS REQUIRED BY THE CONTRACT MAY CAUSE FORFEITURE OF YOUR BID BOND OR OTHER SURETY (I.E.- CASH OR CASHIERS CHECK).**

BID PROPOSAL FORM

Date: _____

Bid of _____ *(company legal name)*,

which is a _____ *(type of legal entity)*,

for the construction of:

City of Midland

PROPOSAL FORM PART A

Pursuant to the published Request for Competitive Sealed Proposals for Construction Services, the undersigned Bidder hereby proposes to perform all the work and furnish all necessary superintendence, labor, machinery, equipment, tools and materials, and whatever else may be necessary to complete all the work described in or reasonably inferable from the Contract Documents for the construction of the **City of Midland** with all related appurtenances, complete, tested, and operational, in accordance with the Plans and Specifications prepared by Martinez Architects, 900 Rockmead Dr, Suite 250, Kingwood, Texas 77339.

This Bid Proposal Form represents Selection Criteria "B" from the Request for Competitive Sealed Proposals for Construction Services (RFP), and shall be submitted in a separate, sealed envelope along with the requested copies of the RFP Response, as outlined in the RFP.

The Bidder binds themselves, upon acceptance of his proposal, to execute the Standard Form of Agreement (AIA Document 201), and furnish an acceptable Performance and Payment Bond in the amount of One Hundred Percent (100%) of the total Contract Price for performing and completing the said work within the time stated and for the prices stated in Part B of this proposal along with all required insurance in the required amounts, per the bid documents 00 21 13 Instruction to Bidders/Bid Forms.

The undersigned Bidder agrees to commence work within 10 days of the date of a written Notice to Proceed. It is understood that the Work is to be Substantially Complete within **Three-Hundred Sixty (365) Days** after the date of the Notice to Proceed. Time for Substantial Completion shall begin on the date established by the Notice to Proceed. The Contractor will pay Liquidated Damages in the amount(s) specified in the Instruction to Bidders/Bid Forms Section 00 21 13, in the event the Work is not Substantially Complete within the Contract Time.

The undersigned agrees that the amounts bid in this Bid Proposal will not be withdrawn or modified for Ninety (90) Days following date of Bid Proposal opening, or such longer period as may be agreed to in writing by the City of Midland and the Bidder. The Proposer shall secure and submit with Bid Proposal Form a Bid Bond in the amount of Five Percent (5%) of the Total Bid Amount.

The Successful Bidder is required to enter into the Standard Form of Agreement (AIA Document 201) and furnish an acceptable Performance and Payment Bond and Maintenance Bond, each in the amount of One Hundred (100) Percent of the Contract Price, along with all required insurance in the stated amounts within Ten (10) Days of the Notice of Award. Unless otherwise expressly provided herein, all references to "day(s)" shall mean calendar day(s).

The Bidder acknowledges that the following Addenda have been received. The modifications to the Bidding Documents noted therein have been considered and all costs thereto are included in the Bid Proposal prices.

Addendum No.:_____ Date:_____ Addendum No.:_____ Date:_____

Addendum No.:_____ Date:_____ Addendum No.:_____ Date: _____

Bidder hereby represents that the only person or parties interested in this offer as principals are those named. Bidder has not directly or indirectly entered into any agreement, participated in any collusion, or otherwise taken any action in restraint of free competitive bidding.

Firm Name: _____ By:

_____

Title:_____

Address:_____

Phone No: _____

ATTEST:

_____ (Seal, if Bidder is a Corporation)

(Typed or Printed Name)

_____

Signature

Date: _____

END OF PROPOSAL FORM PART A

PROPOSAL FORM PART B

Bidder hereby proposes to perform all the work and furnish all necessary superintendence, labor, machinery, equipment, tools and materials, and whatever else may be necessary to complete all the work described in or reasonably inferable from the Contract Documents for the construction of the **City of Midland** with all related appurtenances, complete, tested, and operational, in accordance with the Plans and Specifications, including all addenda, prepared by Martinez Architects, 900 Rockmead Dr, Suite 250, Kingwood, Texas 77339.

Proposal Amount – Fire Stations 5 and Site Developments:

_____ Dollars

($_____)

Proposal Amount – Fire Stations 11 and Site Developments:

_____ Dollars

($_____)

Alternate Bid Proposal No. 1 – Reference drawing sheet A101.1 and Detail 1/A202 for the following scope:

a. Add the fuel station – Fire Station 11
b. Add additional vehicular paving
c. Add sidewalk to new vehicular paving area
d. Relocate dumpster enclosure from Base Bid location

_____ Dollars

($_____)

Alternate Bid Proposal No. 2 – Reference drawing sheet A101.2 and Detail 2/A202 for the following scope: *Note: Alternate No. 2 will only be considered for acceptance if Alternate No. 1 is accepted.*

a. Add Wash Bay building with sidewalk and curb – Fire Station 11
b. Add canopy, screen wall, and concrete pad to accommodate added vacuum/tire fill station
c. Relocate dumpster encloser from Alternat No. 1 location

_____ Dollars

($_____)

IT IS UNDERSTOOD that Proposal Amount listed above represents Selection Criteria “B” from the Request for Competitive Sealed Proposals for Construction Services (RFP), and will be considered along with other criteria established in the RFP, according to the point scale assigned in the RFP.

The City of Midland will award the project based on the highest scoring respondent to the RFP.

The City of Midland reserves the right to reject any or all proposals for any or all products and/or services covered in this proposal and/ or to waive informalities in such proposals. The City of Midland further reserves the right to accept any proposals deemed to be the Best Value to the District.

_____

Offeror's Authorized Signature

3.03 LIST OF UNIT PRICES

A. ADDITIONAL SELECT FILL: Select fill material required in excess of the quantity indicated by the Contract Documents,_____/CY.

B. ADDITIONAL 5" CONCRETE PAVING: Increase area of 5" concrete paving,_____/SF of concrete. Pricing to include all related costs for concrete, reinforcing, excavation, etc.

C.ADDITIONAL 6" CONCRETE PAVING: Increase area of 6" concrete paving,_____/SF of concrete. Pricing to include all related costs for concrete, reinforcing, excavation, etc.

D. ADDITIONAL 7" CONCRETE PAVING: Increase area of 7" concrete paving,_____/SF of concrete. Pricing to include all related costs for concrete, reinforcing, excavation, etc.

E. ADDITIONAL CONCRETE FLATWORK: Increase area of concrete sidewalks,_____/SF of concrete. Pricing to include all related costs for concrete, reinforcing, excavation, etc.

F. ADDITIONAL SOIL STABILIZATION: Stabilization required in excess of the quantity indicated by the contract documents,_____/SY.

EXHIBIT C

Bonding Requirements

The successful bidder shall be required to furnish a Performance & Payment Bond* for bids in excess of $50,000.00, in an amount equal to one hundred percent (100%) of the total contract price, such bond to be executed in five (5) original counterparts by a Corporate Surety authorized to do business in the State of Texas and acceptable to the City of Midland. All bonds must be executed on forms contained in these contract documents. The form of agreement which the successful bidder, as contractor, will be required to execute is also included herewith. The form of agreement and the form of the bonds should be carefully examined by the bidder.

A certified check, cashier's check, bank money order, or irrevocable letter of credit issued by a bank satisfactory to the City, or a bidder's bond on the form provided, in the amount of five percent (5%) of the largest possible lump sum bid submitted, payable without recourse to the City, must accompany the bidder's proposal, as a guaranty that the bidder will enter a contract and execute the required payment bond and guaranty in the forms provided within fifteen (15) days after notice of award of contract to him. Bids or proposals without the required bid guaranty will not be considered. All bid sureties and payment bonds shall name the City of Midland as Obligee.

*A cash security such as a cashier's check or irrevocable letter of credit issued by a bank satisfactory to the City for 100 % of the contract amount may be supplied in lieu of the Performance and Payment Bonds. The check will be returned un-cashed upon satisfactory completion of the work and evidence of payment of all obligations due for the contract.

BID BOND

THE STATE OF TEXAS §

SURETY NO. _____

COUNTY OF MIDLAND §

KNOW ALL MEN BY THESE PRESENTS, THAT _____

_____

_____

(hereinafter called the Principal), as Principal, and _____

_____

_____

(hereinafter called the Surety), as Surety, are held and firmly bound unto the City of Midland, Texas a home rule municipal corporation of Midland County, Texas, (hereinafter called the Obligee), in the amount of _____

_____ DOLLARS

($_____), for the payment whereof the said Principal and Surety bind themselves, and their heirs, administrators, executors, successors and assigns, jointly and severally, firmly by these presents.

WHEREAS, the Principal has submitted a Bid or Proposal to enter into a certain written Contract with the obligee to_____

_____.

NOW, THEREFORE, THE CONDITION OF THIS OBLIGATION IS SUCH, that if the said Principal shall faithfully enter into such written Contract, then this obligation shall be void; otherwise to remain in full force and effect.

IT IS EXPRESSLY UNDERSTOOD AND AGREED that if said Principal should withdraw its Bid anytime after such Bid is opened and before official rejection to such Bid or, if successful in securing the award thereof, said Principal should fail to enter into the Contract and furnish satisfactory Performance Bond and Payment Bond, the Obligee, in either such events, shall be entitled and is hereby given the right to collect the full amount of this Bid Bond as liquidated damages.

PROVIDED, further that if any legal action be filed upon this Bond venue shall lie in Midland County, Texas

IN WITNESS THEREOF, THE SAID PRINCIPAL AND SURETY do sign and seal this instrument, this _____ day of _____, 20____.

_____	_____
Principal	Surety
By _____	By _____
Address _____	Address _____
_____	_____

APPROVED AS TO FORM:

_____

City Attorney

NOTE: ATTACH POWER OF ATTORNEY

PAYMENT BOND

STATE OF TEXAS §
§
COUNTY OF MIDLAND §

SURETY'S NO. _____

KNOW ALL MEN BY THESE PRESENTS, THAT _____,

_____

of the City of_____ County of_____,

and State of_____ as Principal, and _____

_____ (hereinafter called the Surety(s)), as Surety(s), are held and firmly bound unto the City of Midland, Texas, a home rule municipal corporation of Midland County, Texas, (hereinafter called the Obligee), in the amount of_____ DOLLARS, ($_____),for the payment whereof the said Principal and Surety bind themselves and their heirs, administrators, executors, successors and assigns, jointly and severally, firmly by these presents.

WHEREAS, the Principal has entered into a certain written contract with the Obligee, dated the _____ day of _____, 20____, to _____

_____,

which contract is hereby referred to and made a part hereof as fully and to the same extent as if copied at length herein.

NOW, THEREFORE, THE CONDITION OF THIS OBLIGATION IS SUCH, that if the said Principal shall pay all claimants supplying labor and material to him or a subcontractor in the prosecution of the work provided for in said contract, then this obligation shall be null and void; otherwise, it is to remain in full force and effect.

PROVIDED further that if any legal action be filed upon this Bond venue shall lie in Midland County, State of Texas.

PROVIDED further that this Payment Bond is submitted in compliance with Chapter 2253 of the Texas Government Code.

Surety, for value received, stipulates and agrees that no change, extension of time, alteration or addition to the terms of the contract, or to the work performed thereunder, or the plans, specifications or drawings accompanying the same, or any assignment of the contract as may be provided for in the instructions to bidders, shall in anywise affect its obligation on this

Bond, and it does waive notice of any such change, extension of time, alteration or addition to the terms of this contract, assignment thereof, or to the work to be performed thereunder.

IN WITNESS WHEREOF the said Principal and Surety have signed and sealed this instrument, this _____ day of _____, 20_____.

_____	_____
Principal	Surety
By_____	By_____
Address_____	Address_____
_____	_____
_____	_____

APPROVED AS TO FORM:

_____

City Attorney

NOTE: ATTACH POWER OF ATTORNEY

PERFORMANCE BOND

STATE OF TEXAS §
§
COUNTY OF MIDLAND §

SURETY'S NO. _____

KNOW ALL MEN BY THESE PRESENTS, THAT _____

_____.

(hereinafter called the principal(s)), as principal(s), and _____

_____,

(hereinafter called the Surety(s)), as Surety(s), are held and firmly bound unto the City of Midland, Texas a home rule municipal corporation of Midland County, Texas, (hereinafter called the Obligee), the amount of _____DOLLARS, ($_____) for the payment whereof the said Principal and Surety bind themselves and their heirs, administrators, executors, successors and assigns, jointly and severally, firmly by these presents.

WHEREAS, the Principal has entered into a certain written contract with the Obligee, dated the _____ day of _____, 20____, to furnish and deliver the following equipment:

_____

_____

_____

_____

_____

_____

_____

_____

_____

_____

SPECIFICALLY including in the scope of this work and bond, the additional maintenance guaranty provisions set forth in the contract conditions, which contract is hereby referred to and made a part hereof as fully and to the same extent as if copied at length herein, as well as the Principals primary obligation to perform according to plans and specifications.

NOW, THEREFORE, THE CONDITION OF THIS OBLIGATION IS SUCH, that if the said Principal shall faithfully perform the work in accordance with the plans, specifications,

instructions to bidders, general and special conditions and other contract documents, including any addendums thereto, then this obligation shall be void; otherwise to remain in full force and effect.

PROVIDED further that if any legal action be filed upon this Bond venue shall lie in Midland County, State of Texas.

PROVIDED further that this Performance Bond is submitted in compliance with Chapter 2253 of the Texas Government Code.

Surety, for value received, stipulates and agrees that no change, extension of time, alteration or addition to the terms of the contract, or to the work performed thereunder, or the plans, specifications or drawings accompanying the same, or any assignment of the contract as may be provided for in the instructions to bidders, shall in anywise effect its obligation on this Bond, and it does waive notice of any such change, extension of time, alteration or addition to the terms of this contract, assignment thereof, or to the work to be performed thereunder.

IN WITNESS WHEREOF the said Principal and Surety have signed and sealed this instrument, this _____ day of _____, 20_____.

_____	_____
Principal	Surety
By_____	By_____
Address_____	Address_____
_____	_____
_____	_____

APPROVED AS TO FORM:

_____

City Attorney

NOTE: ATTACH POWER OF ATTORNEY

"General Decision Number: TX20200114 01/03/2020

Superseded General Decision Number: TX20190114

State: Texas

Construction Type: Building

County: Anderson County in Texas.

BUILDING CONSTRUCTION PROJECTS (does not include single family homes or apartments up to and including 4 stories).

Note: Under Executive Order (EO) 13658, an hourly minimum wage of $10.80 for calendar year 2020 applies to all contracts subject to the Davis-Bacon Act for which the contract is awarded (and any solicitation was issued) on or after January 1, 2015. If this contract is covered by the EO, the contractor must pay all workers in any classification listed on this wage determination at least $10.80 per hour (or the applicable wage rate listed on this wage determination, if it is higher) for all hours spent performing on the contract in calendar year 2020. If this contract is covered by the EO and a classification considered necessary for performance of work on the contract does not appear on this wage determination, the contractor must pay workers in that classification at least the wage rate determined through the conformance process set forth in 29 CFR 5.5(a)(1)(ii) (or the EO minimum wage rate, if it is higher than the conformed wage rate). The EO minimum wage rate will be adjusted annually. Please note that this EO applies to the above-mentioned types of contracts entered into by the federal government that are subject to the Davis-Bacon Act itself, but it does not apply to contracts subject only to the Davis-Bacon Related Acts, including those set forth at 29 CFR 5.1(a)(2)-(60). Additional information on contractor requirements and worker protections under the EO is available at www.dol.gov/whd/govcontracts.

Modification Number	Publication Date
0	01/03/2020

ASBE0021-002 06/01/2016

	Rates	Fringes
ASBESTOS WORKER/HEAT & FROST INSULATOR	$ 24.32	7.52

BOIL0587-003 01/01/2017

	Rates	Fringes
Boilermaker	$ 28.00	22.35

CARP0551-007 04/01/2016

	Rates	Fringes
CARPENTER (Form Work Only)	$ 23.05	8.78

IRON0263-019 06/01/2017

	Rates	Fringes
Ironworker, reinforcing and structural	$ 23.25	7.32

LABO0154-022 05/01/2008

	Rates	Fringes
Laborers: (Mason Tender - Cement/Concrete)	$ 14.25	2.90

* PLUM0286-004 06/03/2019

	Rates	Fringes
Plumber	$ 30.35	13.52

SUTX2009-001 04/20/2009

	Rates	Fringes
BRICKLAYER	$ 18.00	0.00
CARPENTER, Includes Acoustical Ceiling Installation, Batt Insulation, and Metal Stud Installation (Excludes Drywall Hanging, and Form Work)	$ 15.13	2.63
CEMENT MASON/CONCRETE FINISHER	$ 12.09	0.00
DRYWALL HANGER	$ 13.89	1.00
ELECTRICIAN	$ 18.06	4.87
LABORER: Common or General	$ 12.19	0.00
LABORER: Landscape & Irrigation	$ 8.50	0.22
LABORER: Mason Tender - Brick	$ 12.02	0.00
LABORER: Mortar Mixer	$ 12.00	0.00
OPERATOR: Backhoe/Excavator/Trackhoe	$ 14.67	0.47
OPERATOR: Bulldozer	$ 13.00	0.35
OPERATOR: Crane	$ 21.33	0.00
OPERATOR: Forklift	$ 14.58	0.00
OPERATOR: Loader (Front End)	$ 10.54	0.00
PAINTER: Brush, Roller and Spray	$ 11.75	0.00
ROOFER	$ 13.64	1.80
SHEET METAL WORKER	$ 17.00	0.00

TILE SETTER.....$ 15.00 0.00

TRUCK DRIVER.....$ 10.68 0.34

WELDERS - Receive rate prescribed for craft performing operation to which welding is incidental.

==========

Note: Executive Order (EO) 13706, Establishing Paid Sick Leave for Federal Contractors applies to all contracts subject to the Davis-Bacon Act for which the contract is awarded (and any solicitation was issued) on or after January 1, 2017. If this contract is covered by the EO, the contractor must provide employees with 1 hour of paid sick leave for every 30 hours they work, up to 56 hours of paid sick leave each year. Employees must be permitted to use paid sick leave for their own illness, injury or other health-related needs, including preventive care; to assist a family member (or person who is like family to the employee) who is ill, injured, or has other health-related needs, including preventive care; or for reasons resulting from, or to assist a family member (or person who is like family to the employee) who is a victim of, domestic violence, sexual assault, or stalking. Additional information on contractor requirements and worker protections under the EO is available at www.dol.gov/whd/govcontracts.

Unlisted classifications needed for work not included within the scope of the classifications listed may be added after award only as provided in the labor standards contract clauses (29CFR 5.5 (a) (1) (ii)).

The body of each wage determination lists the classification and wage rates that have been found to be prevailing for the cited type(s) of construction in the area covered by the wage determination. The classifications are listed in alphabetical order of ""identifiers"" that indicate whether the particular rate is a union rate (current union negotiated rate for local), a survey rate (weighted average rate) or a union average rate (weighted union average rate).

Union Rate Identifiers

A four letter classification abbreviation identifier enclosed in dotted lines beginning with characters other than ""SU"" or ""UAVG"" denotes that the union classification and rate were prevailing for that classification in the survey. Example: PLUM0198-005 07/01/2014. PLUM is an abbreviation identifier of the union which prevailed in the survey for this classification, which in this example would be Plumbers. 0198 indicates the local union number or district council number where applicable, i.e., Plumbers Local 0198. The next number, 005 in the example, is an internal number used in processing the wage determination. 07/01/2014 is the effective date of the most current negotiated rate, which in this example is July 1, 2014.

Union prevailing wage rates are updated to reflect all rate changes in the collective bargaining agreement (CBA) governing

this classification and rate.

Survey Rate Identifiers

Classifications listed under the ""SU"" identifier indicate that no one rate prevailed for this classification in the survey and the published rate is derived by computing a weighted average rate based on all the rates reported in the survey for that classification. As this weighted average rate includes all rates reported in the survey, it may include both union and non-union rates. Example: SULA2012-007 5/13/2014. SU indicates the rates are survey rates based on a weighted average calculation of rates and are not majority rates. LA indicates the State of Louisiana. 2012 is the year of survey on which these classifications and rates are based. The next number, 007 in the example, is an internal number used in producing the wage determination. 5/13/2014 indicates the survey completion date for the classifications and rates under that identifier.

Survey wage rates are not updated and remain in effect until a new survey is conducted.

Union Average Rate Identifiers

Classification(s) listed under the UAVG identifier indicate that no single majority rate prevailed for those classifications; however, 100% of the data reported for the classifications was union data. EXAMPLE: UAVG-OH-0010 08/29/2014. UAVG indicates that the rate is a weighted union average rate. OH indicates the state. The next number, 0010 in the example, is an internal number used in producing the wage determination. 08/29/2014 indicates the survey completion date for the classifications and rates under that identifier.

A UAVG rate will be updated once a year, usually in January of each year, to reflect a weighted average of the current negotiated/CBA rate of the union locals from which the rate is based.

WAGE DETERMINATION APPEALS PROCESS

1.) Has there been an initial decision in the matter? This can be:

* an existing published wage determination
* a survey underlying a wage determination
* a Wage and Hour Division letter setting forth a position on a wage determination matter
* a conformance (additional classification and rate) ruling

On survey related matters, initial contact, including requests for summaries of surveys, should be with the Wage and Hour Regional Office for the area in which the survey was conducted because those Regional Offices have responsibility for the Davis-Bacon survey program. If the response from this initial contact is not satisfactory, then the process described in 2.) and 3.) should be followed.

With regard to any other matter not yet ripe for the formal process described here, initial contact should be with the Branch of Construction Wage Determinations. Write to:

Branch of Construction Wage Determinations
Wage and Hour Division
U.S. Department of Labor
200 Constitution Avenue, N.W.
Washington, DC 20210

2.) If the answer to the question in 1.) is yes, then an interested party (those affected by the action) can request review and reconsideration from the Wage and Hour Administrator (See 29 CFR Part 1.8 and 29 CFR Part 7). Write to:

Wage and Hour Administrator
U.S. Department of Labor
200 Constitution Avenue, N.W.
Washington, DC 20210

The request should be accompanied by a full statement of the interested party's position and by any information (wage payment data, project description, area practice material, etc.) that the requestor considers relevant to the issue.

3.) If the decision of the Administrator is not favorable, an interested party may appeal directly to the Administrative Review Board (formerly the Wage Appeals Board). Write to:

Administrative Review Board
U.S. Department of Labor
200 Constitution Avenue, N.W.
Washington, DC 20210

4.) All decisions by the Administrative Review Board are final.

===

END OF GENERAL DECISION
"

IMPORTANT NOTICE

Conflict Of Interest Reporting Requirements

Compliance with LOCAL GOVERNMENT CODE TITLE 5. MATTERS AFFECTING PUBLIC OFFICERS AND EMPLOYEES SUBTITLE C. MATTERS AFFECTING PUBLIC OFFICERS AND EMPLOYEES OF MORE THAN ONE TYPE OF LOCAL GOVERNMENT CHAPTER 176. DISCLOSURE OF CERTAIN RELATIONSHIPS WITH LOCAL GOVERNMENT OFFICERS; PROVIDING PUBLIC ACCESS TO CERTAIN INFORMATION.

Form CIQ: This questionnaire reflects changes made to the law by H.B. 23, 84th Leg., Regular Session. This questionnaire shall be filed in accordance with Chapter 176, Local Government Code, by a vendor who has a business relationship as defined by Section 176.001(1-a) with a local governmental entity and the vendor meets requirements under Section 176.006(a). By law this questionnaire must be filed with the records administrator of the local governmental entity not later than the 7th business day after the date the vendor becomes aware of facts that require the statement to be filed. See Section 176.006(a-1), Local Government Code. A vendor commits an offense if the vendor knowingly violates Section 176.006, Local Government Code. An offense under this section is a misdemeanor.

Bidders are responsible for filing Conflict of Interest form "CIQ" in accordance with the above referenced statute. Failure to do so is a class C Misdemeanor. Contracts or Purchase Orders awarded to a vendor that has violated this law is subject to termination at such time that the violation is discovered with no recourse to the City of Midland. The bidder will be subsequently removed from the bidders list for a minimum of one year.

When there is no known conflict of interest as defined by the statute, it is not necessary to file/submit the Form CIQ. The form must be submitted if a conflict is subsequently discovered.

By submitting a response to this request, vendor represents that it complies with the requirements of Chapter 176 of the Texas Local Government Code.

For a current list of the local government officers go to: http://www.midlandtexas.gov/

Upon completion of the form, sign and submit with bid or mail to:

City of Midland
Attn: City Secretary
PO Box 1152
Midland, Texas 79702

CONFLICT OF INTEREST QUESTIONNAIRE

FORM CIQ

For vendor doing business with local governmental entity

This questionnaire reflects changes made to the law by H.B. 23, 84th Leg., Regular Session.

This questionnaire is being filed in accordance with Chapter 176, Local Government Code, by a vendor who has a business relationship as defined by Section 176.001(1-a) with a local governmental entity and the vendor meets requirements under Section 176.006(a).

By law this questionnaire must be filed with the records administrator of the local governmental entity not later than the 7th business day after the date the vendor becomes aware of facts that require the statement to be filed. *See* Section 176.006(a-1), Local Government Code.

A vendor commits an offense if the vendor knowingly violates Section 176.006, Local Government Code. An offense under this section is a misdemeanor.

OFFICE USE ONLY

Date Received

1 **Name of vendor who has a business relationship with local governmental entity.**

2 ☐ **Check this box if you are filing an update to a previously filed questionnaire.** (The law requires that you file an updated completed questionnaire with the appropriate filing authority not later than the 7th business day after the date on which you became aware that the originally filed questionnaire was incomplete or inaccurate.)

3 **Name of local government officer about whom the information is being disclosed.**

_____

Name of Officer

4 **Describe each employment or other business relationship with the local government officer, or a family member of the officer, as described by Section 176.003(a)(2)(A). Also describe any family relationship with the local government officer. Complete subparts A and B for each employment or business relationship described. Attach additional pages to this Form CIQ as necessary.**

A. Is the local government officer or a family member of the officer receiving or likely to receive taxable income, other than investment income, from the vendor?

☐ Yes ☐ No

B. Is the vendor receiving or likely to receive taxable income, other than investment income, from or at the direction of the local government officer or a family member of the officer AND the taxable income is not received from the local governmental entity?

☐ Yes ☐ No

5 **Describe each employment or business relationship that the vendor named in Section 1 maintains with a corporation or other business entity with respect to which the local government officer serves as an officer or director, or holds an ownership interest of one percent or more.**

6 ☐ Check this box if the vendor has given the local government officer or a family member of the officer one or more gifts as described in Section 176.003(a)(2)(B), excluding gifts described in Section 176.003(a-1).

7

_____ _____

Signature of vendor doing business with the governmental entity Date

CONFLICT OF INTEREST QUESTIONNAIRE
For vendor doing business with local governmental entity

A complete copy of Chapter 176 of the Local Government Code may be found at http://www.statutes.legis.state.tx.us/Docs/LG/htm/LG.176.htm. For easy reference, below are some of the sections cited on this form.

Local Government Code § 176.001(1-a): "Business relationship" means a connection between two or more parties based on commercial activity of one of the parties. The term does not include a connection based on:

(A) a transaction that is subject to rate or fee regulation by a federal, state, or local governmental entity or an agency of a federal, state, or local governmental entity;

(B) a transaction conducted at a price and subject to terms available to the public; or

(C) a purchase or lease of goods or services from a person that is chartered by a state or federal agency and that is subject to regular examination by, and reporting to, that agency.

Local Government Code § 176.003(a)(2)(A) and (B):

(a) A local government officer shall file a conflicts disclosure statement with respect to a vendor if:

***

(2) the vendor:

(A) has an employment or other business relationship with the local government officer or a family member of the officer that results in the officer or family member receiving taxable income, other than investment income, that exceeds $2,500 during the 12-month period preceding the date that the officer becomes aware that

(i) a contract between the local governmental entity and vendor has been executed; or

(ii) the local governmental entity is considering entering into a contract with the vendor;

(B) has given to the local government officer or a family member of the officer one or more gifts that have an aggregate value of more than $100 in the 12-month period preceding the date the officer becomes aware that:

(i) a contract between the local governmental entity and vendor has been executed; or

(ii) the local governmental entity is considering entering into a contract with the vendor.

Local Government Code § 176.006(a) and (a-1)

(a) A vendor shall file a completed conflict of interest questionnaire if the vendor has a business relationship with a local governmental entity and:

(1) has an employment or other business relationship with a local government officer of that local governmental entity, or a family member of the officer, described by Section 176.003(a)(2)(A);

(2) has given a local government officer of that local governmental entity, or a family member of the officer, one or more gifts with the aggregate value specified by Section 176.003(a)(2)(B), excluding any gift described by Section 176.003(a-1); or

(3) has a family relationship with a local government officer of that local governmental entity.

(a-1) The completed conflict of interest questionnaire must be filed with the appropriate records administrator not later than the seventh business day after the later of:

(1) the date that the vendor:

(A) begins discussions or negotiations to enter into a contract with the local governmental entity; or

(B) submits to the local governmental entity an application, response to a request for proposals or bids, correspondence, or another writing related to a potential contract with the local governmental entity; or

(2) the date the vendor becomes aware:

(A) of an employment or other business relationship with a local government officer, or a family member of the officer, described by Subsection (a);

(B) that the vendor has given one or more gifts described by Subsection (a); or

(C) of a family relationship with a local government officer.

Consideration of Location of Bidder's Principal Place of Business
For Bids of $50,000 up to $100,000 for Services and $500,000 for Commodities
Affidavit of Eligibility

Pursuant to Texas Local Government Code 271.9051, in purchasing real property, personal property that is not affixed to real property, or services, if the City receives one or more bids from a bidder whose principal place of business is in the City of Midland and whose bid is within five percent (5%) of the lowest bid price received by the City from a bidder who is not a resident of the City of Midland, the City may enter into a contract with:

(1) the lowest bidder; or

(2) the bidder whose principal place of business is in the City of Midland if the City Council determines, in writing, that the local bidder offers the City the best combination of contract price and additional economic development opportunities for the City of Midland created by the contract award, including the employment of residents of the City of Midland and increased tax revenues to the City of Midland.

In order to receive consideration, bidders must submit this affidavit to:

Regina Stephenson
Purchasing Manager
City of Midland
300 N. Loraine St.,
PO BOX 1152
Midland, TX 79702-1152

Complete all areas below. Incomplete affidavits may be rejected.

Local Business Name: _____

Local Address (must be within the City limits): _____

1. Is the above address the principal place of business for the business named above? ☐ Yes ☐ No
2. How many residents of the City of Midland are employed at the above business location? _____
3. Year your business was established in the City of Midland: _____
4. If you collect sales tax for ANY class of customer, provide the following Reseller information:

   Reseller Permit Number: _____

   Company Name and Address (as it appears on permit):

   _____

   _____

   _____

5. Does your business have more than one office in the State of Texas? ☐ Yes ☐ No
   If Yes, identify the office location considered as the point-of sale for the purpose of sales tax calculation:

   _____

   _____

6. Was the local business required to pay business and/or real property tax for the most recent tax year?

   ☐ Yes ☐ No

   If Yes, did the local business pay any of this tax to the City of Midland? ☐ Yes ☐ No

Under penalty of perjury, the undersigned states that the foregoing statements are true and correct. It is further acknowledged that any person, firm, corporation or entity intentionally submitting false information to the City in an attempt to qualify for eligibility shall be prohibited from bidding on City of Midland products and services for a period of one (1) year.

Authorized Signature: _____ Date: _____

Printed Name and Title: _____

NOTICE TO BIDDERS

IF THIS PURCHASE REQUIRES A CONTRACT, THE ATTACHED **CONTRACT AND INSURANCE REQUIREMENTS ARE NON-NEGOTIABLE**. MODIFICATIONS BY BIDDER/COMPANY OF ANY MATERIAL TERM(S) TO THE CONTRACT DOCUMENTS WILL BE DEEMED A NON-RESPONSIVE BID. NON-RESPONSIVE BIDS WILL BE REJECTED. BIDDER/COMPANY MUST BE WILLING TO SIGN THE CONTRACT AS IS AND WITHOUT MODIFICATIONS, PROVIDE PROPERLY EXECUTED BONDS (IF APPLICABLE) AND PROVIDE INSURANCE SPECIFICALLY AS REQUIRED WITHIN THE CONTRACT DOCUMENTS **WITHIN 21 DAYS** OF THE DATE OF THE TRANSMITTAL LETTER.

IF THE SELECTED BIDDER/COMPANY CANNOT MEET THE ABOVE REQUIREMENTS, THEN **THE CITY RESERVES THE RIGHT TO AWARD THIS PURCHASE TO ANOTHER BIDDER**.

IMPORTANT NOTICE – IF THE CONTRACT DOCUMENTS REQUIRE WORKER'S COMPENSATION INSURANCE, BIDDER/COMPANY MUST CARRY WORKER'S COMPENSATION INSURANCE TO BE ELIGIBLE FOR THIS CONTRACT. IF YOU CANNOT PROVIDE WORKER'S COMPENSATION INSURANCE AS REQUIRED BY STATE OF TEXAS STATUTE, WE RESPECTFULLY REQUEST THAT YOU "NO BID" THIS WORK.

COMPLIANCE: Company agrees that it shall comply with Texas Government Code Section 2252.908, *et seq.*, as amended. Company agrees that it shall comply with Texas Local Government Code Section 176.006, *et seq.*, as amended. For further instructions on how to comply with Texas Government Code Section 2252.908 and Texas Local Government Code Section 176.006,

please go to https://www.ethics.state.tx.us/whatsnew/elf_info_form1295.htm and https://www.ethics.state.tx.us/filinginfo/conflict_forms.htm.

ANY VENDOR WHO FAILS TO COMPLY WITH THE TERMS OF THE AWARD **MAY BE DECLARED AN IRRESPONSIBLE VENDOR**. BIDS SUBMITTED BY SAID VENDOR SHALL NOT BE CONSIDERED AGAIN FOR A MINIMUM PERIOD OF SIX MONTHS AS DETERMINED BY THE CITY MANAGER.

IMPORTANT: READ CAREFULLY BEFORE MAKING BID
GENERAL CONDITIONS OF BIDDING

1. All bids are to be submitted as specified in the procurement document(s).

2. Each Bidder is requested to provide: Descriptive literature clearly marked to show each item on this bid. Any catalog or manufacturer's reference in this proposal is descriptive, but not restrictive, and is used only to indicate type and quality. If, however, the bidder proposes similar but not identical terms, he must furnish all particulars. If no mention is made of any exceptions, it is assumed that he is bidding on the article specified and not on an approved equal and he will be required to deliver exact article specified.

3. Prices should be itemized. (Indicate unit price and extend to show total price.) In case of discrepancy between the unit price and the extension, the unit price shall govern.

4. Unit price for each item offered shall include all discounts; e.g., trade, seasonal, etc. with net 30 days payment terms. Discounts shall not be shown as such but shall be incorporated in the base bid price. Any bid showing discounts will be considered an alternate bid. The City of Midland will not be responsible for any goods delivered without a purchase order number.

5. If the Contract is awarded, it will be awarded to either the lowest responsible bidder, or to the bidder who provides goods or services at the best value for the City of Midland. In determining the best value for the City of Midland, the City of Midland may consider the criteria enumerated in Section 252.043 of the Texas Local Government Code. The City of Midland reserves the right to award by item or by total bid, or to reject any or all bids or parts of bids. Further, the City of Midland reserves all rights granted by Section 271.027 of the Texas Local Government Code. The City of Midland reserves the right to award the bid to the lowest responsible bidder.

6. Time of proposed delivery shall be stated in number of calendar days.

7. NOTE: The City of Midland, Texas is exempt from all Federal, State and City tax. Please do not include these taxes in your bid price or invoice. Taxable items must be so designated, and the City will supply vendor with a Tax Exemption Certificate, properly executed.

8. All items are to be delivered, unloaded and stacked at the location indicated on the Bid Request and Purchase Order.

9. All items are to be delivered F.O.B. to the City of Midland, Texas with freight prepaid and included in the bid.

10. Detailed specifications rule over General specifications (headings, etc.)

11. The City of Midland reserves the right to remove a company from the bid list for (1) continued failure to respond to request for bids, (2) failure to deliver merchandise within promised time, or (3) delivery of substandard merchandise.

12. No officer or employee of the City shall have a financial interest, direct or indirect, in any contract with the City, or be financially interested, directly or indirectly, in the sale to the City of any lands, materials, supplies or services except as allowed under chapter 176 of the Local Government Code. Form CIQ shall be submitted and placed on file with the City of Midland.

13. The City shall determine the most advantageous bid for the City and accept the proposal of the responsible party submitting the lowest and/or most advantageous bid or reject any and all bids.

14. The City of Midland, Texas may consider as informal any bid not prepared and submitted in accordance with the provisions hereof, and may waive, in its sole discretion, any informalities.

STANDARD PURCHASE TERMS AND CONDITIONS
PURCHASING DIVISION, CITY OF MIDLAND, TEXAS

"Seller", as used herein, has the same meaning as "Company". "Buyer", as used herein, has the same meaning as "City".

Seller and Buyer agree as follows:

1. SELLER TO PACKAGE GOODS - Seller will package goods in accordance with good commercial practice. Each shipping container shall be clearly and permanently marked as follows; (a) Seller's name and address, (b) Consignee's name, and address, and purchase order number, (c) Container number and total number of containers, e.g. box 1 of 4 boxes, and (d) the number of the container bearing the packing slip. Seller shall bear cost of packaging unless otherwise provided. Goods shall be suitably packed to secure lowest transportation costs and to conform with requirements of common carriers and any applicable specifications. Buyer's count or weight shall be final and conclusive on shipments not accompanied by packing lists.

2. SHIPMENT UNDER RESERVATION PROHIBITED - Seller is not authorized to ship the goods under reservation and no tender of a bill of lading will serve as a tender of goods.

3. TITLE & RISK OF LOSS - The title and risk of loss of the goods shall not pass to Buyer until Buyer actually receives and takes possession of the goods at the point or points of delivery in Midland, Texas.

4. NO REPLACEMENT OF DEFECTIVE TENDER - Every tender or delivery of goods must fully comply with all provisions of this contract as to time of delivery, quality and the like. If a tender is made which does not fully conform, this shall constitute a breach and Seller shall not have the right to substitute a conforming tender, provided, where the time for performance has yet expired, the Seller may reasonably notify Buyer of his intention to cure and may then make a conforming tender within the contract time but not afterward.

5. PLACE OF DELIVERY - The place of delivery shall be that set forth in the block of the purchase order entitled "deliver to".

6. INVOICES - Seller shall submit separate ORIGINAL invoices, on each purchase order. Invoices shall indicate the purchase order number. All invoices must be mailed to City of Midland, Accounts Payable, P.O. Box 1152, Midland, TX 79702-1152. Payment will be made within 30 days from the date the invoice and properly executed receiving documents are received by City of Midland, Accounts Payable at the above address. Invoices sent to any other address will delay payment.

7. GRATUITIES - The buyer may, by written notice to the seller, cancel this contract without liability to Seller, if it is determined by Buyer that gratuities, in the form of entertainment, gifts, or otherwise, were offered or given by the seller, or any agent or representative of the Seller, to any officer or employee of the City of Midland with a view toward securing a contract or securing favorable treatment with respect to performing of such a contract. In the event this contract is cancelled by Buyer pursuant to this provision, Buyer shall be entitled, in addition to any other rights and remedies, to recover or withhold the amount of the cost incurred by Seller in providing such gratuities.

8. WARRANTY - PRICE -

a. The price to be paid by the Buyer shall be that contained in Seller's bid which Seller warrants to be no higher than Seller's current prices on order by others for products of the kind and specifications covered by this agreement for similar quantities under similar or like conditions and methods of purchase. In the event Seller breaches this warranty, the prices of the items shall be reduced to the Seller's current prices on order by others, or in the alternative, Buyer may cancel this contract without liability to Seller for breach or Seller's actual expense.

b. The Seller warrants that no person or selling agency has been employed or retained to solicit or secure this contract upon an agreement or understanding for commission, percentage, brokerage, or contingent fee excepting bona fide employees or bona fide established commercial or selling agencies maintained by the Seller for the purpose of securing business. For breach or violation of this warranty the Buyer shall have the right or rights to cancel this contract without liability and to deduct from the contract price, or otherwise recover the full amount of such commission, percentage, brokerage or contingent fee.

9. WARRANTY - PRODUCT - Seller shall not limit or exclude any implied warranties and any attempt to do so shall render this contract voidable at the option of the Buyer. Seller warrants that the goods furnished will conform to the specification, drawings, and description listed in the bid invitation, and to the sample(s) furnished by Seller, if any. In the event of a conflict between the specifications, drawings and descriptions, the specifications shall govern.

10. SAFETY WARRANTY - Seller warrants that the product sold to Buyer shall conform to the standards promulgated by the U.S. Department of Labor under the Occupational Safety and Health Act of 1970. In the event the product does not conform to OSHA standards, Buyer may return the product for correction or replacement at the Seller's expense. In the event Seller fails to make the appropriate correction within a reasonable time, correction made by buyer will be at Seller's expense.

11. RIGHT OF INSPECTION - Buyer shall have the right to inspect the goods at delivery before accepting them.

12. CANCELLATION - Buyer shall have the right to cancel for default all or any part of the undelivered portion of this order if Seller breached any of the terms hereof including warranties of Seller if the Seller becomes insolvent or commits acts of bankruptcy. Such right of cancellation is in addition to and not in lieu of any other remedies which Buyer may have in law or equity.

13. TERMINATION - The performance of work under this order may be terminated in whole, or in part by the Buyer in accordance with this provision. Termination of work hereunder shall be effected by the delivery to Seller of a "Notice of Termination" specifying the extent to which performance of work under the order is terminated and the date upon which such termination becomes effective. Such right of termination is in addition to and not in lieu of the rights of Buyer set forth in Clause 13, herein.

14. FORCE MAJEURE - Neither party shall be held responsible for losses, resulting if the fulfillment of any terms or provisions of this contract is delayed or prevented by any cause not within the control of the party whose performance is interfered with, and which by the exercise of reasonable diligence said party is unable to prevent.

15. ASSIGNMENT - DELEGATION - No right or interest in this contract shall be assigned or delegation of any obligation made by Seller without the written permission of the Buyer. Any attempted assignment or delegation by the Seller shall be wholly void and totally ineffective for all purposes unless made in conformity with this paragraph.

16. MODIFICATIONS - This contract can be modified or rescinded only by a writing signed by both of the parties or their duly authorized agents.

17. INTERPRETATION - PAROL EVIDENCE - This writing, plus any specifications for bids and performance provided by Buyer in its advertisement for bids, is intended by the parties as a final expression of this agreement. No course of prior dealings between the parties and no usage of the trade shall be relevant to supplement or explain any term used in this agreement. Acceptance or acquiescence in a course of performance rendered under this agreement shall not be relevant to determine the meaning of this agreement even though the accepting or acquiescing party has knowledge of the performance and opportunity for objection. Whenever a term defined by the Uniform Commercial Code is used in this agreement, the definition contained in the Code is to control.

18. ADVERTISING - Seller shall not advertise or publish without Buyer's prior consent the fact that Buyer has entered into the contract, except to the extent necessary to comply with proper requests for information from an authorized representative of the federal, state or local government.

19. RIGHT TO ASSURANCE - Whenever one party to the contract in good faith has reason to question the other party's intent to perform he may demand that the other party give written assurance of this intent to perform. In the event that a demand is made and no assurance is given within five (5) days, the demanding party may treat this failure as an anticipatory repudiation of the contract.

20. PROTECTION AGAINST ROYALTIES OR PATENT INFRINGEMENT - The Seller shall pay all royalties and license fees, and shall provide for the use of any design, device, material or process covered by letters patent or copyright by suitable legal agreement with Patentee or Owner thereof. The Seller shall defend all suits or claims for infringement of any patent or copyrights and shall indemnify and save the Buyer harmless from any loss on account thereof, except that Buyer shall defend all such suits and claims and shall be responsible for all such loss when a particular design, device, material or process is allowed to the Seller, the Seller shall indemnify and save Buyer harmless from any loss on account thereof. If the material or process specified or required by Buyer is an infringement, the Seller shall be responsible for such loss unless he promptly gives written notice to the buyer of such infringement.

21. TIME - It is hereby expressly agreed and understood that time is of the essence for the performance of this contract, and any failure by contract to meet the time specifications of this agreement will cause Seller to be in default of this agreement.

22. TAX - The City of Midland is exempt from all Federal, State and City tax. Please do not include these taxes in your bid price or invoice. Taxable items must be so designated, and the City will supply vendor with a Tax Exemption Certificate, properly executed.

23. **INSURANCE –**

The following provisions apply unless the agreement is for the supply of goods only:

Seller shall at all times during the term of this agreement maintain and keep in full force and effect insurance in the following types and minimum amounts with companies authorized to do business in the State of Texas:

Commercial General Liability (including Contractual liability):	
-Personal Injury:	$1,000,000.00 per person
	$1,000,000.00 per occurrence
-Property Damage:	$500,000.00 per occurrence
Business Automobile Liability:	$250,000.00 combined single limit - Personal Injury and Property Damage
Worker's Compensation:	Statutory limits
Employers' Liability:	$500,000.00 per accident or occurrence

The Commercial General Liability shall be on a per project or policy aggregate, including completed operations, and shall be on an occurrence basis.

The Workers' Compensation coverage provided by Seller shall inure to the benefit of employees injured during the course and scope of their employment by Seller pursuant to this agreement.

The Business Automobile Liability insurance provided by Seller shall cover any auto for bodily injury and property damage, including owned vehicles, hired and non-owner vehicles, and employee non-ownership, and the amount of such policy shall be a minimum of $250,000.00 covering any vehicle used for the execution of the work that is the subject of this agreement.

All insurance required pursuant to this agreement, except for Worker's Compensation Insurance, shall name the Buyer as an additional insured on a claims occurred basis. All insurance required pursuant to this agreement, including Worker's Compensation Insurance, shall provide for a waiver of subrogation as to the Buyer.

The parties agree that, prior to the execution of the agreement, Seller shall provide one or more certificates of insurance showing that the requirements of this article have been met, and specifically containing, without limitations, the following endorsement:

"The City of Midland is included as an additional insured, on a claims occurred basis, on all policies except for Worker's Compensation. The Seller and Insurer hereby waive all rights of subrogation with respect to claims against the City of Midland, its agents, employees and officers, on all policies of insurance."

Buyer shall be provided the notice by Seller's insurance provider not later than thirty (30) days prior to any reduction or termination of such coverage. Buyer shall not be required to provide any insurance whatsoever pursuant to this agreement.

Seller shall contractually require all contractors, subcontractors, and sub-subcontractors that work on any portion of the work that is the subject of this agreement to obtain insurance coverage that meets or exceeds the policy requirements and minimum amounts specified herein. All contractors, subcontractors, and sub-subcontractors shall obtain insurance policies that provide blanket waivers of subrogation in favor of the City of Midland and policies that name the City of Midland as an additional insured on a claims occurred basis (except workers compensation).

24. ASSIGNMENT - Seller shall not, either directly or indirectly, assign all or any part of this agreement or any interest, right or privilege herein, without the prior written consent of the Buyer. The issue on whether or not to grant consent to an assignment is in the sole discretion of the Buyer.

25. RELEASE - NOTWITHSTANDING ANY OTHER PROVISIONS, SELLER HEREBY RELEASES, ACQUITS, RELINQUISHES AND FOREVER DISCHARGES BUYER, BUYER'S EMPLOYEES AND OFFICERS, FROM ANY AND ALL DEMANDS, CLAIMS, DAMAGES, OR CAUSES OF ACTION OF ANY KIND WHATSOEVER WHICH SELLER HAS OR MIGHT HAVE IN THE FUTURE, INCLUDING BUT NOT LIMITED TO BREACH OF CONTRACT, QUANTUM MERUIT, CLAIMS UNDER THE DUE PROCESS AND TAKINGS CLAUSES OF THE TEXAS AND UNITED STATES CONSTITUTIONS, TORT CLAIMS, OR BUYER'S NEGLIGENCE.

26. GOVERNING LAW AND VENUE - This agreement shall be governed by the laws of the State of Texas. All performance and payment made pursuant to this agreement shall be deemed to have occurred in Midland County, Texas. Exclusive venue for any claims, suits or any other action arising from or connected in any way to this agreement or the performance of this agreement shall be in Midland County, Texas. The obligations and undertakings of each of the parties to this agreement shall be deemed to have occurred in Midland County, Texas.

27. INDEPENDENT CONTRACTOR - It is expressly understood and agreed that Seller shall perform all work and services described herein as an independent contractor and not as an officer, agent, servant or employee of the Buyer; that Seller shall have exclusive control of and the exclusive right to control the details of the services and work performed hereunder, and all persons performing the same; and shall be solely responsible for the acts and omissions of its officers, agents, employees, contractors and subcontractors; that the doctrine of respondeat superior shall not apply as between Buyer and Seller, its officers, agents, employees, contractors and subcontractors; and that nothing herein shall be construed as creating a partnership or joint enterprise between Buyer and Seller. No person performing any of the work and services described hereunder by Seller shall be considered an officer, agent, servant or employee of the Buyer. Further, it is specifically understood and agreed that nothing in this agreement is intended or shall be construed as creating a "Community of Pecuniary Interest" or "An Equal Right of Control" which would give rise to vicarious liability. Seller shall be an independent contractor under this agreement and shall assume all of the rights, obligations and liabilities, applicable to it as such independent contractor hereunder. The Buyer does not have the power to direct the order in which the work is done. The Buyer shall not have the right to control the means, methods or details of the Seller's work. Seller shall assume exclusive responsibility for the work. Seller is entirely free to do the work in its own way.

28. NOTICE OF ALLEGED BREACH; STATUTORY PREREQUISITES - As a condition precedent to filing suit for alleged damages incurred by an alleged breach of an express or implied provision of this agreement, Seller or his legal representative, shall give the City Manager, or any other reasonable official of the Buyer, notice in writing (consisting of one original and seven copies of notice attached to a copy of this agreement) of such damages, duly verified, within one-hundred-twenty (120) days after the same has been sustained. The discovery rule does not apply to the giving of this notice. The notice shall include when, where and how the damages occurred, the apparent extent thereof, the amount of damages sustained, the amount for which the Seller will settle, the physical and mailing addresses of Seller at the time and date the claim was presented and the physical and mailing addresses of Seller for the six months immediately preceding the occurrence of such damages, and the names and addresses of the witnesses upon whom the Seller relies to establish its claim; and a failure to so notify the City Manager within the time and manner provided herein shall exonerate, excuse and except the Buyer from any liability whatsoever. The Buyer is under no obligation to provide notice to Seller that Seller's notice is insufficient. Buyer reserves the right to request reasonable additional information regarding the claim. Said additional information shall be supplied within thirty (30) days after receipt of notice.

The statutory prerequisites outlined herein constitute jurisdictional requirements pursuant to Section 271.154 of the Texas Local Government Code and Section 311.034 of the Texas Government Code. Notwithstanding any other provision, Seller's failure to comply with the requirements herein shall perpetually bar Seller's claim for damages under Chapter 271 of the Texas Local Government Code, and Section 311.034 of the Texas Government Code, regardless if Buyer has actual or constructive notice or knowledge of said claim or alleged damages. Seller agrees that the requirements of this entire agreement are reasonable.

29. INDEMNITY (NOT APPLICABLE TO PURCHASE AGREEMENTS) - SELLER WILL INDEMNIFY AND HOLD HARMLESS AND DEFEND BUYER AND ALL OF BUYER'S OFFICERS, AGENTS AND EMPLOYEES FROM ALL SUITS, ACTIONS, CLAIMS, DAMAGES, PERSONAL INJURIES, LOSSES, PROPERTY DAMAGE AND EXPENSES OF ANY CHARACTER WHATSOEVER, INCLUDING REASONABLE ATTORNEY'S FEES

BROUGHT FOR OR ON ACCOUNT OF ANY INJURIES OR DAMAGES RECEIVED OR SUSTAINED BY ANY PERSON OR PERSONS OR PROPERTY, ON ACCOUNT OF ANY NEGLIGENT ACT OF SELLER, its agents or employees, or any subcontractor, arising out of, or resulting from, Seller's use of, or activities on, the agreement premises, and Seller will be required to pay any judgment with costs which may be obtained against Buyer or any of its officers, agents or employees, including reasonable attorney's fees.

SELLER SHALL INDEMNIFY AND HOLD HARMLESS AND DEFEND BUYER AND ALL OF BUYER'S OFFICERS, AGENTS AND EMPLOYEES FROM ALL SUITS, ACTIONS, CLAIMS, DAMAGES, ACCIDENTAL DEATH, PERSONAL INJURIES, PROPERTY DAMAGE, LOSSES, AND EXPENSE OF ANY CHARACTER WHATSOEVER INCLUDING REASONABLE ATTORNEY'S FEES, BROUGHT FOR OR ON ACCOUNT OF ANY INJURIES OR DAMAGES RECEIVED OR SUSTAINED BY ANY PERSON OR PERSONS OR PROPERTY, ON ACCOUNT OF ANY NEGLIGENT ACT OF BUYER, BUYER'S OFFICERS, AGENTS AND EMPLOYEES, WHETHER SUCH NEGLIGENT ACT WAS THE SOLE PROXIMATE CAUSE OF THE INJURY OR DAMAGE OR A PROXIMATE CAUSE JOINTLY AND CONCURRENTLY WITH SELLER OR SELLER'S EMPLOYEES, AGENTS OR SUBCONTRACTORS NEGLIGENCE, IN THE EXECUTION, SUPERVISION AND OPERATIONS GROWING OUT OF OR IN ANY WAY CONNECTED WITH THE PERFORMANCE OF THIS AGREEMENT AND SELLER WILL BE REQUIRED TO PAY ANY JUDGMENT WITH COSTS WHICH MAY BE OBTAINED AGAINST BUYER OR ANY OF BUYER'S OFFICERS, AGENTS OR EMPLOYEES, INCLUDING ATTORNEY'S FEES.

30. SOVEREIGN IMMUNITY - By executing this agreement the Buyer is not waiving its right of sovereign immunity. The Buyer is retaining its immunity from suit. The Buyer is not granting consent to be sued by legislative resolution or action. **THERE IS NO WAIVER OF SOVEREIGN IMMUNITY**.

31. THIRD PARTY BENEFICIARY - The Buyer's approval of this agreement does not create a third party beneficiary. There is no third party beneficiary to this agreement. No person or entity who is not a party to this agreement shall have any third party beneficiary or other rights hereunder.

32. <u>ATTORNEY FEES</u> - BY EXECUTING THIS AGREEMENT, SELLER AGREES TO WAIVE AND DOES HEREBY KNOWINGLY, CONCLUSIVELY, VOLUNTARILY AND INTENTIONALLY WAIVE ANY CLAIM IT HAS OR MAY HAVE IN THE FUTURE AGAINST THE BUYER, REGARDING THE AWARD OF ATTORNEY'S FEES, WHICH ARE IN ANY WAY RELATED TO THE AGREEMENT, OR THE CONSTRUCTION, INTERPRETATION OR BREACH OF THE AGREEMENT. THE SELLER SPECIFICALLY AGREES THAT IF THE SELLER BRINGS OR COMMENCES ANY LEGAL ACTION OR PROCEEDING RELATED TO THIS AGREEMENT, THE CONSTRUCTION, INTERPRETATION, VALIDITY OR BREACH OF THIS AGREEMENT, INCLUDING BUT NOT LIMITED TO ANY ACTION PURSUANT TO THE PROVISIONS OF THE TEXAS UNIFORM DECLARATORY JUDGMENTS ACT (TEXAS CIVIL PRACTICE AND REMEDIES CODE SECTION 37.001, ET. SEQ., AS AMENDED), OR CHAPTER 271 OF THE TEXAS LOCAL GOVERNMENT CODE, THE SELLER AGREES TO ABANDON, WAIVE AND RELINQUISH ANY AND ALL RIGHTS TO THE RECOVERY OF ATTORNEY'S FEES TO WHICH SELLER MIGHT OTHERWISE BE ENTITLED.

SELLER AGREES THAT THIS IS THE VOLUNTARY AND INTENTIONAL RELINQUISHMENT AND ABANDONMENT OF A PRESENTLY EXISTING KNOWN RIGHT. SELLER ACKNOWLEDGES THAT IT UNDERSTANDS ALL TERMS AND CONDITIONS OF THE AGREEMENT. THE SELLER FURTHER ACKNOWLEDGES AND AGREES THAT THERE WAS AND IS NO DISPARITY OF BARGAINING POWER BETWEEN THE BUYER AND THE SELLER. THIS SECTION SHALL NOT BE CONSTRUED OR INTERPRETED AS A WAIVER OF SOVEREIGN IMMUNITY.

THE SELLER AND BUYER ARE RELYING ON THEIR OWN JUDGMENT. EACH PARTY HAD THE OPPORTUNITY TO DISCUSS THIS AGREEMENT WITH LEGAL COUNSEL PRIOR TO ITS EXECUTION.

33. CONSIDERATION - The terms of this agreement are supported by good and valuable consideration, the receipt and sufficiency of which is hereby acknowledged by the parties named herein.

34. CERTIFICATION - In accordance with the Texas Local Government Code, the City of Midland Department of Facilities and Fleet Management does hereby certify that the City of Midland is in compliance with Sections 252, 271 and all applicable sections of the Texas Local Government Code and other state law as it applies to procurement and contracting issues.

35. FEDERAL WAGE REQUIREMENTS - If applicable, the Davis-Bacon Act, 29 CFR 5.5, and any related acts or regulations are hereby incorporated by reference and made a part of this agreement, and all terms and requirements under said laws, by such incorporation, are made terms and requirements of this agreement, to which the parties to this agreement have agreed to be bound.

36. COMPLIANCE WITH FEDERAL, STATE AND LOCAL LAWS - Seller shall at all times during the term of this agreement comply with applicable federal, state, and local laws regarding Seller's activities pursuant to this agreement, including but not limited to all applicable sections of the Municipal Code of Midland, Texas, as may be amended, said sections being hereby incorporated by reference and made a part of this agreement for all legal purposes. Failure to abide by any such law mentioned herein constitutes grounds for the immediate termination of this agreement.

THE CITY OF MIDLAND

CONTRACT

Contract No.

THIS CONTRACT, effective the ____ day of _____, 20__, by and between the City of Midland, hereinafter referred to as "City", and _____, hereinafter referred to as "Company", is made for the following considerations:

1. **Cost:** Total Proposal: $ _____ DOLLARS

2. **Scope of Work:** Company shall perform all work described for _____ in the following documents, attached hereto and incorporated herein by reference for all legal purposes.

EXHIBIT A..... Specifications, Proposal or Cost Summary
EXHIBIT B.....Intentionally Omitted
EXHIBIT C..... Bonding instructions for Public Works Contract of $50,000 and more
EXHIBIT D..... Wage Scale

3. **City:** The words "City's Representative" or "representative" shall mean _____ or the designee under whose supervision these contract documents, including the plans and specifications, were prepared, or who may inspect work performed under this Contract; or such other representative, supervisor, or inspector as may be authorized by City to act in any particular capacity under this Contract.

4. **City's Representative:** City's Representative may make periodic visits to the site to observe the progress and quality of the executed work and to determine, in general, if the work is proceeding in accordance with the contract documents. City's representative will not be required to make exhaustive or continuous on-site inspections to check the quality or quantity of the work, nor will such representative be responsible for the construction means, methods, techniques, sequences or procedures, or the safety precautions incident thereto. City's representative will not be responsible for Company's failure to perform the work in accordance with the contract.

5. **Company:** Unless otherwise stipulated, Company shall provide and pay for all materials, supplies, machinery, equipment, tools, superintendence, labor, insurance, and all water, light, power, fuel, transportation and all other facilities necessary for the execution and completion of the work covered by

the contract documents. Unless otherwise specified, all materials shall be new, and both workmanship and materials shall be of a good quality. Company shall, if required, furnish satisfactory evidence as to the kind and quality of materials.

5.1. Company shall, at its expense, obtain all permits and licenses necessary for the performance of this contract and pay all fees and taxes required by law, and comply with all laws, ordinances, rules and regulations governing Company's performance of the contract, including all environmental laws and regulations, whether state or federal.

5.2. All work shall be done and all materials furnished in strict conformity with the contract and specifications.

6. **Minor Work Not Mentioned:** All minor detail of the work not specifically mentioned in the Specifications but obviously necessary for the proper completion of the work, such as the proper connection of new work to old, shall be considered as incidental to and a part of the work for which the prices are named in the contract. Company will not be entitled to any additional compensation therefor unless specifically stated otherwise. Otherwise the term "extra work" as used in this contract shall mean and include all work that may be required by City to be done by Company to accomplish any alteration or addition to the work as shown on the Specifications.

6.1. Company shall perform all extra work under the direction of City's Representative when presented with a written work order signed by City's Representative, subject, however, to the right of the Company to require written confirmation of such extra work order by City. Payment for extra work shall be as agreed in the work order.

7. **Safety:** Company shall at all times exercise reasonable precaution for the safety of employees and others on or near the work and shall comply with all applicable provisions of federal, state and municipal laws. All machinery and equipment and other physical hazards shall be guarded in accordance with federal, state or municipal laws or regulations.

8. **INDEMNITY: COMPANY SHALL INDEMNIFY AND HOLD HARMLESS AND DEFEND CITY AND ALL OF CITY'S OFFICERS, AGENTS AND EMPLOYEES FROM ALL SUITS, ACTIONS, CLAIMS, DAMAGES, PERSONAL INJURIES, ACCIDENTAL DEATH, LOSSES, PROPERTY DAMAGE AND EXPENSES OF ANY CHARACTER WHATSOEVER, INCLUDING ATTORNEY'S FEES, BROUGHT FOR OR ON ACCOUNT OF ANY INJURIES OR DAMAGES RECEIVED OR SUSTAINED BY ANY PERSON OR PERSONS OR PROPERTY, ON ACCOUNT OF ANY NEGLIGENT ACT OF COMPANY, THEIR AGENTS OR**

EMPLOYEES, OR ANY SUBCONTRACTOR, IN THE EXECUTION, SUPERVISION AND OPERATIONS GROWING OUT OF OR IN ANY WAY CONNECTED WITH THE PERFORMANCE OF THIS CONTRACT, AND COMPANY WILL BE REQUIRED TO PAY ANY JUDGMENT WITH COSTS WHICH MAY BE OBTAINED AGAINST CITY OR ANY OF ITS OFFICERS, AGENTS OR EMPLOYEES, INCLUDING ATTORNEY'S FEES.

8.1. **COMPANY SHALL INDEMNIFY AND HOLD HARMLESS AND DEFEND CITY AND ALL OF CITY'S OFFICERS, AGENTS AND EMPLOYEES FROM ALL SUITS, ACTIONS, CLAIMS, DAMAGES, PERSONAL INJURIES, ACCIDENTAL DEATH, PROPERTY DAMAGE, LOSSES, AND EXPENSES OF ANY CHARACTER WHATSOEVER INCLUDING ATTORNEY'S FEES, BROUGHT FOR OR ON ACCOUNT OF ANY INJURIES OR DAMAGES RECEIVED OR SUSTAINED BY ANY PERSON OR PERSONS OR PROPERTY, ON ACCOUNT OF ANY NEGLIGENT ACT OF CITY, CITY'S OFFICERS, AGENTS AND EMPLOYEES, WHETHER SUCH NEGLIGENT ACT WAS THE SOLE PROXIMATE CAUSE OF THE INJURY OR DAMAGE OR A PROXIMATE CAUSE JOINTLY AND CONCURRENTLY WITH COMPANY OR COMPANY'S EMPLOYEES, AGENTS OR SUBCONTRACTORS NEGLIGENCE IN THE EXECUTION, SUPERVISION AND OPERATIONS GROWING OUT OF OR IN ANY WAY CONNECTED WITH THE PERFORMANCE OF THIS CONTRACT, AND COMPANY WILL BE REQUIRED TO PAY ANY JUDGMENT WITH COSTS WHICH MAY BE OBTAINED AGAINST CITY OR ANY OF ITS OFFICERS, AGENTS OR EMPLOYEES, INCLUDING ATTORNEY'S FEES.**

8.2. **COMPANY AGREES THAT IT WILL INDEMNIFY AND SAVE CITY HARMLESS FROM ALL CLAIMS GROWING OUT OF ANY DEMANDS OF SUBCONTRACTORS, LABORERS, WORKMEN, MECHANICS, MATERIALMEN, AND FURNISHERS OF MACHINERY AND PARTS THEREOF, EQUIPMENT, POWER TOOLS AND ALL SUPPLIES, INCURRED IN THE FURTHERANCE OF THE PERFORMANCE OF THIS CONTRACT. WHEN CITY SO DESIRES, COMPANY SHALL FURNISH SATISFACTORY EVIDENCE THAT ALL OBLIGATIONS OF THE NATURE HEREINABOVE DESIGNATED HAVE BEEN PAID, DISCHARGED OR WAIVED. COMPANY, ITS SURETIES AND INSURANCE CARRIERS SHALL DEFEND, INDEMNIFY AND SAVE HARMLESS CITY AND ALL OF ITS OFFICERS, AGENTS AND EMPLOYEES FROM ALL SUITS, ACTIONS, OR CLAIMS OF ANY CHARACTER WHATSOEVER, BROUGHT FOR OR ON ACCOUNT OF ANY INJURIES OR DAMAGES RECEIVED OR SUSTAINED BY ANY PERSON OR PERSONS OR PROPERTY, ARISING FROM ANY ACT OF COMPANY OR ANY SUBCONTRACTOR, THEIR**

AGENTS OR EMPLOYEES, IN THE EXECUTION AND SUPERVISION OF THIS CONTRACT, AND WILL BE REQUIRED TO PAY ANY JUDGMENT WITH COSTS WHICH MAY BE OBTAINED AGAINST CITY OR ANY OF ITS OFFICERS, AGENTS, OR EMPLOYEES INCLUDING ATTORNEY'S FEES.

9. **Start of Work:** Company shall commence work no later than ten (10) days after receipt of the execution of this document or other written release to proceed and shall complete such work no later than _____calendar days after release to proceed.

10. **Clean Up:** Company shall promptly remove from City's premises all materials condemned by City's Representative on account of failure to conform to the contract, whether actually incorporated in the work or not, and Company shall at its own expense promptly replace such condemned materials with other materials conforming to the requirements of the contract. Company shall also bear the expense of restoring all work of other contractors damaged by any such removal or replacement. If Company does not remove and replace any such condemned materials within a reasonable time after a written notice by City, City may remove and replace such at Company's expense.

11. **Warranty:** Neither the final payment nor any provision in this contract shall relieve Company of responsibility for faulty materials or workmanship, and he shall remedy any defects due thereto and pay for any damage to other work resulting therefrom, which shall appear within a period of one (1) year from the date of substantial completion. City shall give notice of observed defects with reasonable promptness.

12. **Remedy:** City may, on account of subsequently discovered evidence, withhold whole or part of any payment to such extent as may be necessary to protect itself from loss on account of:

12.1. Defective work not remedied; or

12.2. Claims filed or reasonable evidence indicating possible filing of claims; or

12.3. Failure of Company to make payments promptly to subcontractors or for material or labor which City may pay as an agent for the Company; or

12.4. Damages to another contractor or subcontractor.

When the above grounds to withhold payment are removed, or Company provides a surety bond satisfactory to City, which will protect City in the amount withheld, payment may be released.

13. **Funding Out:** In the event no funds or insufficient funds are appropriated and budgeted or are otherwise unavailable in any fiscal period for contract payments due under the contract, then this contract shall terminate on the last day of the fiscal period for which full appropriations were made, without penalty

or expense to City of any kind whatsoever.

14. **Wage Scale:** Company agrees to pay all workmen in his employ no less than the generally prevailing wage rate for employees of similar category in the Permian Basin Area, as is depicted in the wage rate scale attached hereto as EXHIBIT D, and incorporated herein by reference for all legal purposes.

14.1. If applicable, the Davis-Bacon Act, 29 CFR 5.5, and any related acts or regulations are hereby incorporated by reference and made a part of this Contract, and all terms and requirements under said laws, by such incorporation, are made terms and requirements of this Contract, to which the parties to this Contract have agreed to be bound.

15. **Prompt Pay Act:** City and Company agree that Texas Government Code, Chapter 2251, Payment for Goods and Services (the "Prompt Pay Act") does not waive governmental immunity.

16. **Payment; Retainage:** After all work is completed by Company, including all Change Orders altering the original scope and amount of the contract are completed, and the City has inspected and approved that the work is completed and in compliance with the contract and all subsequent Change Orders, the City may thereafter issue payment to Company in the amount of the contract and all Change Orders. The City shall be the final judge of when the work is completed by Company. The City, in its sole discretion, shall determine if the work under the contract and under any Change Orders has been done to the City's requirements.

16.1. The City may make periodic payments to Company; provided, however, such periodic payments may only be made pursuant to this section, and only after all work and all Change Orders are completed by Company and approved by the City. The approval shall be in the City's sole discretion. Requests for progress payments may be made to the extent of the materials and labor completed at the end of each month. Upon approval by the City or the City's representative, the request and invoice shall be forwarded for payment less 5% retainage. The total of these payments shall not exceed 95% of the total contract amount.

17. **Late Completion; Liquidated Damages:** It is hereby understood and mutually agreed, by and between Company and the City, that the date of beginning and the time for completion as specified in the contract of the work to be done hereunder are ESSENTIAL CONDITIONS of this contract; and it is further mutually understood and agreed that the work embraced in this contract shall be commenced on a date to be specified in the "Notice to Proceed." Company agrees that said work shall be prosecuted regularly, diligently, and uninterruptedly at such rate of progress as will insure full completion thereof within the time specified. It is expressly understood and agreed, by and between Company and the City,

that the time for the completion of the work described herein is a reasonable time for the completion of the same, taking into consideration the average climatic range and usual industrial conditions prevailing in this locality.

17.1. In the event Company shall neglect, fail or refuse to complete the work within the time herein specified, or any proper extension thereof granted by the City, then Company and Company's surety, if any, shall be liable for and does hereby agree, as a part consideration for the awarding of this contract, to pay to the City $500.00, not as a penalty but as liquidated damages for such breach of contract as hereinafter set forth, for each and every day that Company shall be in default after the time stipulated in the contract for completing the work. Further, the City shall have the right to cancel this contract for such delay. In the event the City cancels this contract pursuant to the terms of this section, the City shall pay to Company only those monies deemed appropriate by the City, in its sole discretion, to compensate Company for any work actually performed, less any liquidated damages Company owes the City.

17.2. The said amount is fixed and agreed upon by and between Company and the City because of the impracticability and extreme difficulty of fixing and ascertaining the actual damages the City would in such event sustain, and said amount is agreed to be the amount of damages which the City would sustain and said amount shall be retained from time to time by the City from current periodical estimates.

17.3. It is further agreed that time is of the essence of each and every portion of this contract and of the specifications wherein a definite and certain length of time is fixed for the performance of any act whatsoever; and where under the contract an additional time is allowed for the completion of any work, the new time limit fixed by such extension shall be of the essence of this contract. Provided, that Company shall not be charged with liquidated damages or any excess cost when the City determines, in its sole discretion, that Company is without fault and Company's reasons for the time extension are acceptable to the City. Provided, further, that Company shall not be charged with liquidated damages of any excess cost when the delay in completion of the work is due:

a. To any preference, priority or allocation order duly issued by the Government;

b. To unforeseeable cause beyond the control and without the fault or negligence of Company, including, but not restricted to, acts of God, or of the public enemy, acts of the City, acts of another contractor in the performance of a contract with the City, fires, floods, epidemics, quarantine restrictions, strikes, freight embargoes, and severe weather; and

c. To any delays of subcontractors or suppliers occasioned by any of the causes specified in subsections (a) and (b) of this article.

17.4. Provided, further, that Company shall, within ten (10) days from the beginning of such delay, unless the City shall, in its sole discretion grant a further period of time prior to the date of final

settlement of the contract, notify the City, in writing, of the causes of the delay, who shall ascertain the facts and extent of the delay and notify Company within a reasonable time of its decision in the matter.

17.5. **COMPANY AGREES THAT THE PAYMENT OF SUCH LIQUIDATED DAMAGES MAY BE RECOVERED BY THE CITY FROM RETAINAGE HELD BY THE CITY. NOTWITHSTANDING ANY OTHER PROVISION HEREOF, COMPANY HEREBY RELEASES, ACQUITS, RELINQUISHES AND FOREVER DISCHARGES CITY, CITY'S EMPLOYEES AND OFFICERS FROM ANY AND ALL DEMANDS, CLAIMS, DAMAGES, OR CAUSES OF ACTION OF ANY KIND WHATSOEVER ARISING FROM THE CITY WITHHOLDING PAYMENT FROM COMPANY AS LIQUIDATED DAMAGES FOR COMPANY'S FAILURE TO COMPLETE THE WORK WITHIN THE TIME SPECIFIED HEREIN, INCLUDING BUT NOT LIMITED TO BREACH OF CONTRACT, QUANTUM MERUIT, CLAIMS UNDER THE DUE PROCESS AND TAKINGS CLAUSES OF THE TEXAS AND UNITED STATES CONSTITUTIONS, TORT CLAIMS, OR CITY'S NEGLIGENCE.**

17.6. **COMPANY SHALL RECEIVE NO FINANCIAL COMPENSATION FOR DELAY OR HINDRANCE TO THE WORK. IN NO EVENT SHALL THE CITY BE LIABLE TO COMPANY OR ANY SUBCONTRACTOR OR SUPPLIER, ANY OTHER PERSON OR ANY SURETY FOR OR ANY EMPLOYEE OR AGENT OF ANY OF THEM, FOR ANY DAMAGES ARISING OUT OF OR ASSOCIATED WITH ANY DELAY OR HINDRANCE TO THE WORK, REGARDLESS OF THE SOURCE OF THE DELAY OR HINDRANCE, INCLUDING EVENTS OF FORCE MAJEURE, AND EVEN IF SUCH DELAY OR HINDRANCE RESULTS FROM, ARISES OUT OF OR IS DUE, IN WHOLE OR IN PART, TO THE NEGLIGENCE OF THE CITY. COMPANY'S SOLE REMEDY IN ANY SUCH CASE SHALL BE AN EXTENSION OF TIME.**

18. **No Third Party Beneficiary:** City's approval of this contract does not create a third party beneficiary. There is no third party beneficiary to this contract. No person or entity who is not a party to this contract shall have any third party beneficiary or other rights hereunder.

19. **WAIVER OF ATTORNEY FEES: BY EXECUTING THIS CONTRACT, COMPANY AGREES TO WAIVE AND DOES HEREBY KNOWINGLY, CONCLUSIVELY, VOLUNTARILY AND INTENTIONALLY WAIVE ANY CLAIM IT HAS OR MAY HAVE IN THE FUTURE AGAINST CITY, REGARDING THE AWARD OF ATTORNEY'S FEES, WHICH ARE IN ANY WAY RELATED TO THE CONTRACT, OR THE CONSTRUCTION, INTERPRETATION OR BREACH OF THE CONTRACT. COMPANY SPECIFICALLY**

AGREES THAT IF COMPANY BRINGS OR COMMENCES ANY LEGAL ACTION OR PROCEEDING RELATED TO THIS CONTRACT, THE CONSTRUCTION, INTERPRETATION, VALIDITY OR BREACH OF THIS CONTRACT, INCLUDING BUT NOT LIMITED TO ANY ACTION PURSUANT TO THE PROVISIONS OF THE TEXAS UNIFORM DECLARATORY JUDGMENTS ACT (TEXAS CIVIL PRACTICE AND REMEDIES CODE SECTION 37.001, ET SEQ., AS AMENDED), OR CHAPTER 271 OF THE TEXAS LOCAL GOVERNMENT CODE, COMPANY AGREES TO ABANDON, WAIVE AND RELINQUISH ANY AND ALL RIGHTS TO THE RECOVERY OF ATTORNEY'S FEES TO WHICH COMPANY MIGHT OTHERWISE BE ENTITLED.

COMPANY AGREES THAT THIS IS THE VOLUNTARY AND INTENTIONAL RELINQUISHMENT AND ABANDONMENT OF A PRESENTLY EXISTING KNOWN RIGHT. COMPANY ACKNOWLEDGES THAT IT UNDERSTANDS ALL TERMS AND CONDITIONS OF THE CONTRACT. COMPANY FURTHER ACKNOWLEDGES AND AGREES THAT THERE WAS AND IS NO DISPARITY OF BARGAINING POWER BETWEEN CITY AND COMPANY. THIS SECTION SHALL NOT BE CONSTRUED OR INTERPRETED AS A WAIVER OF GOVERNMENTAL IMMUNITY.

COMPANY AND CITY ARE RELYING ON THEIR OWN JUDGMENT. EACH PARTY HAD THE OPPORTUNITY TO DISCUSS THIS CONTRACT WITH COMPETENT LEGAL COUNSEL PRIOR TO ITS EXECUTION.

20. **Governmental Immunity:** By executing this contract City is not waiving its right of governmental immunity. City is retaining its immunity from suit. City is not granting consent to be sued by legislative resolution or action.

THERE IS NO WAIVER OF GOVERNMENTAL IMMUNITY.

21. **Insurance:**

Company shall at all times during the term of this Contract maintain and keep in full force and effect insurance in the following types and minimum amounts with companies authorized to do business in the State of Texas:

Commercial General Liability (including Contractual liability):

-Personal Injury:	$1,000,000.00 per person
	$1,000,000.00 per occurrence
-Property Damage:	$500,000.00 per occurrence
Business Automobile Liability:	$250,000.00 combined single limit -

	Personal Injury and Property Damage
Workers' Compensation:	Statutory limits
Employers' Liability:	$500,000.00 per accident or occurrence

The Commercial General Liability shall be on a per project aggregate, including completed operations, and shall be on a claims-occurred basis. This insurance shall name City as an additional insured and waive subrogation in favor of City.

The Business Automobile Liability insurance provided by Company shall cover any auto for bodily injury and property damage, including owned vehicles, hired and non-city vehicles, and employee non-ownership, and the amount of such policy shall be a minimum of $250,000.00 covering any vehicle used for the execution of the work that is the subject of this Contract. This insurance shall name City as an additional insured and waive subrogation in favor of City.

The Workers' Compensation coverage provided by Company shall inure to the benefit of employees injured during the course and scope of their employment by Company pursuant to this Contract. The Workers' Compensation shall waive all rights of subrogation in favor of City.

All insurance required pursuant to this Contract shall provide for a waiver of subrogation in favor of City. All insurance required pursuant to this Contract, except for Workers' Compensation Insurance, shall name City as an additional insured on a claims occurred basis. City shall be provided the notice by Company's insurance provider not later than thirty (30) days prior to any reduction or termination of such coverage.

Company shall contractually require all contractors, subcontractors, and sub-subcontractors that work on any portion of the work that is the subject of this Contract to obtain insurance coverage that meets or exceeds the policy requirements and minimum amounts specified herein. All contractors, subcontractors, and sub-subcontractors shall obtain insurance policies that provide blanket waivers of subrogation in favor of the City of Midland and policies that name the City of Midland as an additional insured on a claims occurred basis (except workers' compensation).

The parties agree that, prior to the execution of the Contract, Company shall provide one or more certificates of insurance specifically stating that these requirements have been met and subject to the approval of City. City shall not be required to provide any insurance whatsoever pursuant to this Contract.

Company certifies that the certificate of insurance provided as required herein complies with the requirements of Chapter 1811 of the Texas Insurance Code. Company shall not use an unapproved certificate of insurance or insert inappropriate language on a certificate. Compliance with state law is the sole responsibility of Company.

22. **Assignment**: Company shall not, either directly or indirectly, assign all or any part of this Contract or any interest, right or privilege herein, without the prior written consent of City. The issue on whether

or not to grant consent to an assignment is in the sole discretion of City.

23. **RELEASE: NOTWITHSTANDING ANY OTHER PROVISIONS, COMPANY HEREBY RELEASES, ACQUITS, RELINQUISHES AND FOREVER DISCHARGES CITY, CITY'S EMPLOYEES AND OFFICERS, FROM ANY AND ALL DEMANDS, CLAIMS, DAMAGES, OR CAUSES OF ACTION OF ANY KIND WHATSOEVER WHICH COMPANY HAS OR MIGHT HAVE IN THE FUTURE, INCLUDING BUT NOT LIMITED TO BREACH OF CONTRACT, QUANTUM MERUIT, CLAIMS UNDER THE DUE PROCESS AND TAKINGS CLAUSES OF THE TEXAS AND UNITED STATES CONSTITUTIONS, TORT CLAIMS, OR CITY'S NEGLIGENCE**.

24. **Governing Law and Venue:** This Contract shall be governed by the laws of the State of Texas. All performance and payment made pursuant to this Contract shall be deemed to have occurred in Midland County, Texas. Exclusive venue for any claims, suits or any other action arising from or connected in any way to this Contract or the performance of this Contract shall be in Midland County, Texas. The obligations and undertakings of each of the parties to this Contract shall be deemed to have occurred in Midland County, Texas. This Contract shall be governed by, interpreted, enforced and construed under the law of the State of Texas. The laws of the State of Texas shall govern, construe and enforce all the rights and duties of the parties, including but not limited to tort claims and any and all contractual claims or disputes, arising from or relating in any way to the subject matter of this Contract, without regard to conflict on laws and rules that would direct application of the laws of another jurisdiction.

25. **Independent Contractor:** It is expressly understood and agreed that Company shall perform all work and services described herein as an independent contractor and not as an officer, agent, servant or employee of City; that Company shall have exclusive control of and the exclusive right to control the details of the services and work performed hereunder, and all persons performing the same; and shall be solely responsible for the acts and omissions of its officers, agents, employees, contractors and subcontractors; that the doctrine of respondeat superior shall not apply as between City and Company, its officers, agents, employees, contractors and subcontractors; and that nothing herein shall be construed as creating a partnership or joint enterprise between City and Company. No person performing any of the work and services described hereunder by Company shall be considered an officer, agent, servant or employee of the City. Further, it is specifically understood and agreed that nothing in this Contract is intended or shall be construed as creating a "Community of Pecuniary Interest" or "An Equal Right of Control" which would give rise to vicarious liability. Company shall be an independent contractor under this Contract and shall assume all of the rights, obligations and liabilities, applicable to it as such independent contractor hereunder. City does not have the power to direct the order in which the work is

done. City shall not have the right to control the means, methods or details of the Company's work. Company shall assume exclusive responsibility for the work. Company is entirely free to do the work in its own way.

26. **Notice of Alleged Breach; Statutory Prerequisites:** As a condition precedent to filing suit for alleged damages incurred by an alleged breach of an express or implied provision of this Contract, Company or its legal representative, shall give the City Manager, or any other reasonable official of City, notice in writing (consisting of one original and seven copies of notice attached to a copy of this Contract) of such damages, duly verified, within one-hundred fifty (150) days after the same has been sustained. The discovery rule does not apply to the giving of this notice. The notice shall include when, where and how the damages occurred, the apparent extent thereof, the amount of damages sustained, the amount for which Company will settle, the physical and mailing addresses of Company at the time and date the claim was presented and the physical and mailing addresses of Company for the six months immediately preceding the occurrence of such damages, and the names and addresses of the witnesses upon whom Company relies to establish its claim; and a failure to so notify the City Manager within the time and manner provided herein shall exonerate, excuse and except City from any liability whatsoever. City is under no obligation to provide notice to Company that Company's notice is insufficient. City reserves the right to request reasonable additional information regarding the claim. Said additional information shall be supplied within thirty (30) days after receipt of notice.

The statutory prerequisites outlined herein constitute jurisdictional requirements pursuant to Section 271.154 of the Texas Local Government Code and Section 311.034 of the Texas Government Code. Notwithstanding any other provision, Company's failure to comply with the requirements herein shall perpetually bar Company's claim for damages under Chapter 271 of the Texas Local Government Code, and Section 311.034 of the Texas Government Code, regardless if City has actual or constructive notice or knowledge of said claim or alleged damages. Company agrees that the requirements of this entire Contract are reasonable.

27. **Consideration:** The terms of this Contract are supported by good and valuable consideration, the receipt and sufficiency of which is hereby acknowledged by the parties named herein.

28. **Termination At Will:** City may terminate this Contract at will for no or any reason upon giving at least one hundred eighty (180) days written notice to Company. The parties to this Contract understand and agree that it is in City's sole discretion to cancel the Contract during the term of the Contract without penalty to City. Company has no expectation and has received no guarantees that this Contract will not be terminated before the end of the Contract term. The parties have bargained for the flexibility of terminating

this Contract upon tender of the requisite notice at any time during the term of the Contract. All work and services under the Contract shall be suspended upon termination of the Contract becoming effective.

29. **Compliance:** Company agrees that it shall comply with Texas Government Code Section 2252.908, *et seq.*, as amended. Company agrees that it shall comply with Texas Local Government Code Section 176.006, *et seq.*, as amended.

30. To the extent that Tex. Gov't Code section 2270.002 applies to this Contract, Company hereby verifies that Company does not boycott Israel and will not boycott Israel during the term of this Contract. If Tex. Gov't Code section 2270.002 does not apply to this Contract, such verification is not required, and Company shall be deemed to have not made such verification.

31. **Records Retention and Production of Information.** To the extent that this Contract is a contract described by Section 552.371 of the Texas Government Code, Company shall (1) preserve all contracting information related to the Contract as provided by the records retention requirements applicable to City for the duration of the contract, (2) promptly provide to City any contracting information related to the Contract that is in the custody or possession of Company on request of City, and (3) on completion of the Contract, either (i) provide at no cost to City all contracting information related to the Contract that is in the custody or possession of Company, or (ii) preserve the contracting information related to the Contract as provided by the records retention requirements applicable to City.

32. **Public Information.** To the extent that this Contract is a contract described by Section 552.371 of the Texas Government Code, Company agrees as follows in accordance with Section 552.372(b) of the Texas Government Code: The requirements of Subchapter J, Chapter 552, Government Code, may apply to this contract, and the contractor or vendor agrees that the contract can be terminated if the contractor or vendor knowingly or intentionally fails to comply with a requirement of that subchapter.

EXECUTED IN DUPLICATE the day and year first above mentioned.

THE CITY OF MIDLAND, TEXAS

By: _____
Courtney B. Sharp, City Manager

ATTEST

_____
Amy M. Turner, City Secretary

APPROVED ONLYAS TO FORM

_____
John Ohnemiller, City Attorney

COMPANY:

By: _____

Name:_____

Title: _____

STATE OF _____ §
§
COUNTY OF_____ §

BEFORE ME, the undersigned authority, on this ____ day of _____, 20____ personally appeared, _____, an officer of _____, known to me to be the person and official whose name is subscribed to the forgoing instrument, and acknowledged to me that he executed the same as the act and deed of said corporation, for the purposes and consideration therein expressed, and in the capacity therein stated.

GIVEN UNDER MY HAND AND SEAL OF OFFICE this the ____day of _____, 20____.

_____
Notary Public, State of Texas

SECTION 00 31 32 - GEOTECHNICAL DATA

PART 1 – GENERAL

1.01 THE FOUNDATION INVESTIGATION REPORT

A. The geotechnical report entitled: Geotechnical Investigation based on the following soil reports:

1. Beyonf Engineering and Testing, LLC
   Fire Station No. 5 – Project No. GT1902006, Dated 04/04/2019
   Fire Station No. 11 – Project No. GT1902007, Dated 04/11/2019

B. Complete copies of the Geotechnical Reports are attached herein. They are provided for reference and to familiarize the contractor with minimum project requirements. The drawings and specifications govern the construction of the project. In the event that specific design criteria is not indicated in the drawings or specifications, the recommendations provided in the Geotechnical Report shall be utilized, but in no way shall the proposed design be less than the minimum requirements contained in the Geotechnical Report. Prior to commencement of work, notify the Architect of any discrepancies between the drawings, or specifications, and the geotechnical report to determine appropriate course of action.

C. The Contractor is hereby advised to review the Geotechnical Report and visit the site to ascertain the conditions affecting the Work. In the event of discrepancies between the Drawings, Specifications, and Geotechnical Report, the Geotechnical Report shall take precedence. In the absence of a Geotechnical Report, discrepancies between Drawings and Specifications shall be brought to the attention of the Architect for resolution. Failure to review the Geotechnical Report and report discrepancies, between the Geotechnical Report, if any, and Drawings and Specifications, to the Architect will not relieve the Contractor from the responsibility to perform the work required by such documents, at no additional expense to the Owner.

1.02 SOIL CONDITIONS

A. The conditions indicated in the report were known to exist at the location shown on the date the tests were performed; however, these boring logs are for the Contractor's consideration only, and he shall visit the site and fully acquaint himself with the existing conditions and be prepared to complete all work required by the documents.

END OF SECTION 00 31 32

GEOTECHNICAL REPORT

Fire Station No. 5
MIDLAND, TEXAS

Prepared For:

City of Midland
300 N. Loraine
Midland, TX 79702

Prepared By:

Beyond Engineering and Testing, LLC
3011-B South County Road 1260
Midland, Texas 79706

432.561.5780 | www.BEYONDET.com

April 4, 2019
BEYOND Project No. GT1902006

Geotechnical Report

Fire Station No. 5

MIDLAND, TEXAS

This Report Prepared By:

Beyond Engineering and Testing, LLC
3011-B South County Road 1260
Midland, TX 79706

432.561.5780 | www.BeyondET.com

Prepared by:

Israel Juarez

Israel Juarez, P.E.
Project Manager

Reviewed by:

Eng-Chew Ang, Ph.D., P.E.
Senior Geotechnical Engineer

FIRM REGISTRATION NO. F-19523 - TEXAS

April 4, 2019 ***Project No. GT1902006***

UNAUTHORIZED USE OR COPYING OF THIS DOCUMENT IS STRICTLY PROHIBITED BY ANYONE OTHER THAN THE CLIENT FOR THE SPECIFIC PROJECT.

Geotechnical Report
Fire Station No. 5
Midland, Texas

TABLE OF CONTENTS

1.0 INTRODUCTION 1
2.0 PROPOSED CONSTRUCTION 1
3.0 FIELD EXPLORATION 1
4.0 SUBSURFACE CONDITIONS 2
4.1 Regional Geology 2
4.2 Subsurface Stratigraphy 2
5.0 LABORATORY TESTS 3
5.1 Geotechnical Laboratory Test Results 3
5.2 Soil Corrosiveness 4
6.0 FOUNDATION DESIGN AND GEOTECHNICAL RECOMMENDATIONS 4
6.1 Shallow Foundation Option 4
6.2 Drilled Shaft Foundations (Alternative Option) 5
6.3 Floating Floor Slab for Building Addition 5
6.4 Seismic Considerations 6
7.0 FOUNDATION CONSTRUCTION CRITERIA 7
7.1 Site Preparation 7
7.2 Remediation of Subgrade Soils for Shallow Foundation Option 7
7.4 Drilled Shaft Construction 8
7.5 Open Excavations 9
7.6 Drainage 9
8.0 PAVEMENTS 10
8.1 Material Specifications 11
9.0 LIMITATIONS 11
10.0 REFERENCES 12

APPENDIX

Figure 1: Site Location Map
Figure 2: Borehole Locations Map
Summary of Laboratory Test Results
Log of Boring Key
Logs of Boring: B-1 through B-3
Xenco Analytical Report #615928 (abridged)

Geotechnical Report
Fire Station No. 5
Midland, Texas

1.0 INTRODUCTION

Beyond Engineering and Testing, LLC (BEYOND) presents our subsurface exploration and geotechnical engineering evaluation for the new Fire Station No. 5 project. The proposed project site is located at 2214 W. Golf Coast Road in Midland, Texas. The project location is shown on Figure 1 within the Appendix under *Site Location Map.*

The purpose of this geotechnical investigation and report is to:

- Explore subsurface soil conditions;
- Conduct field and laboratory testing to characterize the soil properties;
- Provide geotechnical engineering parameters for the design and construction of foundation systems;
- Provide recommendations for pavement thickness design;
- Provide earthwork requirements.

The recommendations contained in this report are based upon field and laboratory test results, engineering analyses, experience with similar soil conditions, and our project understanding.

2.0 PROPOSED CONSTRUCTION

BEYOND understands the proposed project will comprise razing the existing fire station building and replacing it with a new fire station building. The new building will be a two-story, steel framed building. The building will include three fire engine bays and living quarters for fire fighters. The building footprint will encompass approximately 10,000 square feet. The new fire station facility will also include a paved parking and public parking lot.

3.0 FIELD EXPLORATION

BEYOND prepared and executed a field exploration program for the proposed project on February 13, 2019. We performed three exploratory boreholes. We drilled two (2) boreholes to a depth of approximately 9.5 feet and one (1) borehole to depth of approximately 19 feet around the immediate perimeter of the existing fire station building.

BEYOND utilized hollow stem auger methods to advance the boreholes. We collected samples using Standard Penetration Testing (SPT) split spoon samplers. We collected all samples from the samplers in the field, performed visual soil classification, labeled the samples as to location and depth, and bagged soil samples to minimize moisture changes. We conducted the SPT tests in general accordance with ASTM D1586: Standard Test Method for Standard Penetration Test (SPT) and Split-Barrel Sampling of Soils. SPT test results are shown on the attached Boring Logs

under the "Field Data" column and are preceded by the letter "N". SPT testing was performed using an automatic hammer.

BEYOND prepared field logs for each boring drilled. The field logs contain visual classifications of the materials encountered during drilling as well as interpolation of the subsurface conditions between samples. We also observed for groundwater while advancing the boreholes. These observations are discussed in subsequent sections of this report.

The project engineer reviewed the field logs, samples, and laboratory data to make appropriate modifications to the field logs. BEYOND classified soils in general accordance with the Unified Soil Classification System (USCS). The soil classification symbols on the boring logs are described in the *Boring Log Key* included in the Appendix. The final logs of boring include modifications based on our laboratory test results and observations performed on the soil samples collected in the field. The final logs of boring describe the materials encountered, strata thickness, the various depths at which the samples were obtained, as well as field test results.

4.0 SUBSURFACE CONDITIONS

4.1 Regional Geology

According to the *Geologic Map of Texas*, Pecos Sheet (1976), the geology for the proposed project site consists of windblown cover sand (Qcs). These materials are described as fine to medium-grained quartz sand, silty, calcareous, caliche nodules common, grayish red. The underlying formation comprises the Ogallala Formation (To). The Ogallala Formation has a general description of fine to medium grained sand, clay, silt, and gravel with calcareous deposits. The formation is also described as indistinctly bedded to crossbedded and weakly cohesive. The formation contains caliche, limestone, sandstone, and chert. These descriptions are mostly consistent with our observations.

4.2 Subsurface Stratigraphy

The native soils comprise silty clayey sand (SC-SM) and clayey sand (SC). The soils transitions from a dark brown color to a light brown/tan color at approximately four feet below the existing ground surface. At this depth and below, the soils also possess calcareous deposits. The sand is typically loose in relatively density between the ground surface and six feet deep. Below about six feet deep, the soils transition to medium dense in relative density.

Our stratum description is generalized and depth ranges are approximate because boundaries between changes within a stratum are seldom clear and abrupt in the field. Detailed logs of boring in the Appendix present the stratum descriptions, sampling types used, laboratory test data, and additional field data. The Boring Log Key, which defines the terms and descriptive symbols used on each boring log, is also presented in the Appendix.

BEYOND did not encounter groundwater during drilling operations. Upon completing drilling operations, the drill crew backfilled the boreholes using soil cuttings. Based on the Texas Water Development Board (TWDB) Groundwater Database of water wells at approximately ¼-mile

radius from the project site locations, minimum groundwater level from nearby water wells was recorded at a depth of approximately 30 feet below ground surface. This measurement is from submitted driller's well reports from 2012 to 2015.

It is imperative to note that the short-term groundwater level observations performed as part of this study are not an accurate evaluation of groundwater levels at the project site and should not be interpreted as a comprehensive groundwater study. The observations made during this investigation may also not represent conditions at the time of construction and it should be understood the presence of groundwater may have an effect on certain construction activities and long-term performance of foundations and pavements. If a detailed groundwater study is desired, a groundwater hydrologist should be retained to perform these services.

5.0 LABORATORY TESTS

BEYOND performed various laboratory tests to determine the soil's physical properties. These tests allow us to classify soils and to assess soil performance under the project design conditions. Laboratory tests are presented in each respective *Log of Boring* and in the *Summary of Laboratory Tests* in the Appendix. The project geotechnical engineer assigned appropriate laboratory tests on selected soil samples. BEYOND performed the following laboratory methods for soil analyses:

- ASTM D2487: Standard Practice for Classification of Soils for Engineering Purposes (Unified Soil Classification System);
- ASTM D4318: Standard Test Methods for Liquid Limit, Plastic Limit, and Plasticity Index of Soils;
- ASTM C136: Standard Test Method for Sieve Analysis of Fine and Coarse Aggregates;
- ASTM D1140: Standard Test Method for Amount of Material in Soils finer than No. 200 (75- μ) Sieve;
- ASTM D2216: Standard Test Method for Laboratory Determination of Water (Moisture) Content of Soil and Rock by Mass, and;
- EPA 300/300.1: Inorganic Anions, Soluble Chloride and Soluble Sulfate Content.

5.1 Geotechnical Laboratory Test Results

Per the Unified Soil Classification System, gravel is considered material retained on the No.4 sieve. Sand is considered material passing the No.4 sieve and retained on the No. 200 mesh sieve. Silt and clay are considered materials passing the No. 200 mesh sieve. In general, soils passing the No. 4 mesh sieve range from 98 to 100%. Soils passing the No. 200 mesh sieve ranges from 28 to 47%.

Based on our field observations, the native soils possess low to moderate plasticity. We performed Atterberg Limits tests to verify our observations. Test results indicates a Plastic Index (PI) values ranging from 5 to 7 with corresponding Liquid Limits of 20 to 21 for soils within four feet below the ground surface. Below four feet, PI values range from 9 to 16 with corresponding LL values of 22 to 30.

Moisture content tests indicate the soils at this project site are relatively dry to approximately four feet below the ground surface. Moisture content range from 7 to 9% from the ground surface to four feet deep. Below four feet, the soils are slightly moist to moist with moisture content ranging from 11 to 17%.

5.2 Soil Corrosiveness

BEYOND obtained the services of Xenco Laboratories to perform analytical tests to determine the content of soluble sulfate and chloride in the soils at foundation bearing depths. The Xenco test data is included on the *Summary of Laboratory Tests*.

Soluble Sulfates and Chlorides

Bore No.	*Depth (feet)*	*Material Type*	*Soluble Chlorides (mg/kg)*	*Soluble Sulfates (mg/kg)*
B-2/B-3 (composite)	2-5.5	SC-SM	75.4	275

These test results indicate low chloride and sulfate contents. Based on these results, the soils at this site possess a low corrosion potential for chlorides on metal and a low corrosion potential for sulfates on concrete.

6.0 FOUNDATION DESIGN AND GEOTECHNICAL RECOMMENDATIONS

BEYOND understands the proposed project will comprise razing the existing fire station building and replacing it with a new fire station building. The new building will be a two-story, steel framed building. The building will include three fire engine bays and living quarters for fire fighters. The building footprint will encompass approximately 10,000 square feet. The new fire station facility will also include a paved parking and public parking lot.

In general, the soils in the general vicinity of the existing fire station possess a relatively loose condition to about six feet below the ground surface. In addition, the demolition operation will also significantly disturb the soils underneath the existing building. Therefore, we will require remediation of loose surficial soils from the existing ground surface to at least 5 feet below the ground surface in accordance with Section 7.2.

Alternately, the design team may use relatively short drilled shafts. This option would require relatively less earthwork to remediate soils. The floor slab would not have to be suspended but may be cast on the ground. Earthwork requirements are provided under Section 7.

6.1 Shallow Foundation Option

The final grading plan was not available during the preparation of this report. We anticipate finished grade will coincide with the existing building grade elevation.

After the existing building and foundation system has been removed, shallow footings should bear on compacted soils placed in accordance to Section 7 of this report. Spread footings should bear at least 2-feet below finished grade and should have a minimum width of 2-feet. Spread footings bearing at least 2-feet below the ground surface can use a net allowable bearing capacity of 3,000 psf. Continuous footing should have a minimum width of 12-inches and bear at least 18 inches below existing grade. Continuous footings may use a net allowable bearing capacity of 1,200 psf. This assumes a safety factor of 3 against general shear failure.

Proper drainage must be maintained during construction and throughout the life of the structures to provide for improved shallow foundation performance. Other design and construction recommendations as outlined in the ACI design manual should be followed.

6.2 Drilled Shaft Foundations (Alternative Option)

As an alternate option and to reduce earthwork due to remediation requirements, the design team may opt to use relatively short drilled shafts to support the proposed building.

Drilled shafts should bear at least 7-feet below the existing ground surface. At this depth, the drilled shafts may use an allowable, unit end bearing capacity of **5,000 psf**. For analysis of drilled shafts, we computed end bearing using the Federal Highway Administration Drilled Shaft Manual, FHWA-NHI-10-016. We utilize a factor of safety of 3 for allowable end bearing capacity. Settlement of the drilled shaft foundation is anticipated to be less than ¾-inch. All drilled shafts should have a minimum diameter of 18 inches. The length of the drilled shafts should be determined by the structural engineer to satisfy axial and lateral loading conditions.

To maintain the integrity of the drilled shafts and to reduce excessive stress overlap from adjacent shafts/piles, the center-to-center spacing between adjacent shafts should be at least 3 times the diameter of the larger shafts, and the edge-to-edge spacing between adjacent shafts should not be less than 3 feet.

6.3 Floating Floor Slab for Building Addition

A floating slab-on-grade is structurally independent of the footings. This option is viable for the proposed building. We recommend the native soils be excavated and recompacted as described in Section 7. BEYOND recommends a crushed stone layer immediately below the floor slab. This will provide increased support, assist in reducing differential floor settlements, and provide uniform friction across the bottom of the slab. Most importantly, the crushed stone allows truck traffic during construction without rutting. A flat surface under the concrete slab reduces irregular shrinkage cracks. The floor slab for the new fire station will essentially act as a pavement as well. Therefore, we recommend using at least six (6) inches of crushed stone that meets TxDOT Item 247 (2014), Grade 3, which is consistent with our pavement recommendations in Section 8. This should provide a composite modulus of subgrade reaction, k, of at least 200 psi/inch (where this value represents the subgrade reaction value corresponding to a 1-ft by 1-ft plate).

For square footing on cohesionless soil subgrade, the subgrade modulus value may be modified for various foundation widths based upon the following equation:

$$K_s = K_1\left[\frac{B+1}{2B}\right]^2$$

Where:

K_s = adjusted modulus of subgrade reaction based on actual footing width;
K_1 = modulus of subgrade reaction corresponds to a 1-ft x 1-ft plate;
B = footing width (in feet)

The floor slab thickness should be designed by the structural engineer.

Based on our experience of similar projects, we provide the following guidelines for concrete floor slab design and construction. The concrete specifications should require a low water/cement ratio and the concrete should be placed with a relatively dry slump. Control joints should be constructed while the concrete is relatively green, before it shrinks. Spacing for control joints should be no greater than 15 feet to control shrinkage cracks.

In order to improve aesthetics by reducing shrinkage cracks and irregular surface textures, BEYOND also recommends the following: the ready-mix concrete should arrive at the target slump and the contractor should not be allowed to add water to the mixture. Water sprayed onto the slab during 'bull floating' must be minimal; otherwise, alligator cracking of the surface may develop. If vapor barriers are used, the designer should also consider adding a thin sand cushion on top of the vapor barrier. This bedding sand allows the concrete to cure evenly from top to bottom. Other design and construction recommendations as outlined in the ACI design manual should be followed.

6.4 Seismic Considerations

The following seismic parameters are based on the 2015 International Building Code (IBC). We used the seismic design web tool developed by the Structural Engineers Association of California and the Office of Statewide Health Planning and Development (www.seismicmaps.org). We selected a Site Class D for this project site. The website provided the following parameters to be used with the structural designs at this site.

Table 6.4.1 Recommended Seismic Parameters

Mapped Spectral Accelerations	Site Coefficients	Max Spectral Response Accelerations
S_s = 0.126 g	F_a = 1.6	S_{Ms} = 0.201 g
S_1 = 0.035 g	F_v = 2.4	S_{M1} = 0.083 g

7.0 FOUNDATION CONSTRUCTION CRITERIA

In this section, we provide various specifications and construction recommendations to allow earthwork to meet the intent of the geotechnical parameters provided in Section 6. We recommend that BEYOND be retained to provide verification testing services during construction. This allows us to verify that construction of foundation items follows our recommendations.

7.1 Site Preparation

Prior to construction, the contractor should establish proper and positive drainage to maintain a relatively dry condition in the area of proposed construction. This will be very important if any work is attempted during prolonged rainfall periods. Water ponding in construction areas should be avoided.

Site preparation should begin by removing surface debris, vegetation, organic topsoil, and major root systems, if any. We assume the existing foundation system comprises a shallow foundation. Given our assumption, all existing footings and plumbing should be removed after demolishing the existing building. Remove soils to a depth of at least two feet below the ground surface or to the depth of the existing foundation, whichever is greater. Extend removal horizontally for at least five feet beyond the building's footprint. Excavated soils, free of debris, can be stockpiled for reuse. Compact the resulting, exposed subgrade soils to 98% of the maximum dry density as determined by ASTM D698. Use the excavated-stockpiled soils, free of debris, to backfill. Place backfill in 6 to 8-inch loose lifts and compact to 98% of the maximum dry density as determined by ASTM D698. *If the new building will use shallow footings for foundation support, the subgrade soil remediation should be performed in accordance with Section 7.2.*

7.2 Remediation of Subgrade Soils for Shallow Foundation Option

The soils underneath the existing building should be excavated to at least five feet below the existing ground surface. Extend removal horizontally for at least five feet beyond the building's footprint. Excavated soils, free of debris, can be stockpiled for reuse. Compact the resulting, exposed subgrade soils to 98% of the maximum dry density as determined by ASTM D698. Use the excavated-stockpiled soils, free of debris, to backfill. Place backfill in 6 to 8-inch loose lifts and compact to 98% of the maximum dry density as determined by ASTM D698.

If additional fill is required to achieve target grade, then use imported select fill that meets one of the following soil classifications: SC-SM, SM, SC, GC or GW-GC. In addition, select fill shall possess a plasticity index, PI of less than 18 and shall not possess particle sizes greater than 3-inches.

Select fill should be placed in 6 to 8-inch compacted lifts and should be compacted to a minimum of 98% of the maximum dry density as determined by ASTM D698. The fill should be moisture conditioned within 3% of optimum moisture content, or drier. Placement density should be verified by nuclear density tests, with at least one test per 2,500 square feet for each lift under buildings and one test per 5,000 square feet in other areas.

7.3 Shallow Foundation Construction

The following construction criteria and general guidance should be observed during shallow foundation construction:

1. Remove loose soils from footing excavations. Do not allow loose, excavated soils from the footings to be spread out within the building pad. These loose soils will cause differential settlements.

2. Excavations for footings should be accomplished with a smooth-mouthed bucket. If a toothed bucket is used, excavation with this bucket should be terminated a few inches above final grade and the excavation completed with a smooth-mouthed bucket or by manual labor. Debris or loose material in the bottom of the excavation should be re-compacted or removed prior to placing concrete. This is especially important along footing excavations.

3. The foundation excavation should be sloped sufficiently to create internal sumps for runoff collection and removal. Foundation excavations subject to rainfall and possible deterioration from accumulated water should be protected using a protective "mud-slab" (concrete). If surface runoff water or groundwater seepage accumulates at the bottom of the foundation excavation, it should be collected and removed and not allowed to adversely affect the quality of the bearing surface.

4. The foundation excavations should be checked for size and cleaned of loose material and debris prior to the placement of reinforcing steel. Precautions should be taken during the placement of reinforcement and concrete to prevent the loose excavated material from falling into the excavation.

5. Prior to the placement of concrete, any water must be removed from the foundation excavation.

6. Prompt placement of concrete in the excavation as it is completed, cleaned, and observed is strongly recommended.

7.4 Drilled Shaft Construction

The following items are important for the successful completion of drilled shaft foundations:

1. The Geotechnical Engineer, or his representative, should observe all drilled shaft excavations. This inspection is to verify proper depth, bearing stratum, cleanliness, rebar placement, and other observations regarding the drilled shaft construction. Cleanliness at the bottom of the excavation is especially critical. Excess loose material at the bottom of the excavation will adversely affect the end bearing capacity.

2. The drilled shaft excavations should be checked for size and to determine that all loose material and free water has been removed prior to the placement of concrete or the

foundation pole. Precautions should be taken during the placement to prevent loose material from falling into the excavation. We recommend that the construction contract include a budget for temporary steel casing, in case the sloughing of sands or entry of water prevents the proper construction of the shafts.

3. Prompt placement of concrete in the excavation as it is completed, cleaned, and inspected is strongly recommended. Under no circumstances should an excavation be drilled if the foundation cannot be completed before the end of the workday.

4. The reinforcement steel cage placed in the shaft should be designed to be stable and centered during the placement of concrete.

5. We did not encounter groundwater during our field investigation. If groundwater is encountered during placement of the drilled shafts, then the contractor should use a temporary steel casing in which case the contractor should be prepared to perform dewatering and use a tremie tube to place the concrete.

7.5 Open Excavations

Temporary construction slopes and/or permanent embankment slopes should be protected from surface runoff water. Site grading should be designed to allow drainage at planned areas where erosion protection is provided, instead of allowing surface water to flow down unprotected slopes. Surcharge loads, either static or dynamic, should not be applied to an excavation slope. Construction equipment should be prevented from traveling along or near the top of the excavation slope. Monitoring of temporary slopes, trenches, and dewatering during construction should be undertaken by the contractor to detect early warnings of movement within slopes, structures, pavements, etc.

In all cases of excavations in soils, sloped excavations and trench shields are required for excavations greater than four feet in depth. The contractor's "Competent Person" (as defined by OSHA) must inspect each trench to determine the type of bench or slope that is actually required. With all excavations, only a "competent person" shall determine whether sloped, benched, or trench shields can be used. OSHA and applicable state and local standards should be observed and followed. Site safety is the responsibility of the contractor.

7.6 Drainage

Proper drainage should be provided away from the foundation elements during all phases of construction and post-construction grading. Proper drainage is essential to the long-term stability of the structure. Ponding of water near the foundation elements from improper drainage should not be permitted. Downspouts should use splash blocks that divert water away from the foundation. Planters near buildings should be lined and should not allow saturation of soils near the foundation.

8.0 PAVEMENTS

We recommend using reinforced Portland Cement Concrete (PCC) pavements for the fire engine exit/entrance drive way. For the public and private parking lots, we anticipate relatively light traffic comprising compact cars, pickup trucks and occasional delivery trucks. Therefore, for the parking lot areas, we recommend using a hot mix asphalt cement (HMAC) type pavement.

The sandy native soils, when well compacted should provide a CBR of about 8. This is roughly equivalent to a resilient modulus of approximately 9,500 psi or a modulus of subgrade reaction of about 180 psi/inch. The following table provides our recommendations for pavement thicknesses based on our experience with similar facilities.

The proposed pavement sections presented here are calculated based solely on engineering structural parameters. Construction cost is not included in this analysis. Daily traffic volume or 18-kips Equivalent Single-Axle Loads (ESALs) for the proposed pavement was not available during preparation of this report. For our analysis, we estimated that the proposed pavement will have the following traffic volumes:

- Light traffic area in the parking lots with assumed 50,000 ESALs (flexible pavement);
- Heavy traffic area for the fire engine exit/entrance drive way with assumed 1,000,000 ESALs (rigid pavement)

BEYOND calculated pavement section options in accordance with the *AASHTO Guide for Design of Pavement Structures 1993*. For pavement analysis we assumed the following parameters:

- Design life: 20 years;
- Reliability: 85% (Flexible and Rigid)
- Overall Standard Deviation: 0.45 (Flexible), 0.35 (Rigid);
- Initial Serviceability: 4.2 (Flexible), 4.5 (Rigid);
- Terminal Serviceability: 2.0 (Flexible), (Rigid);
- Asphaltic Concrete: Layer structural coefficient of 0.44, and a drainage coefficient of 1.0; and
- Untreated Base Course: Layer structural coefficient of 0.12, and a drainage coefficient of 1.0.
- Concrete compression strength: 3,500 psi

Table 8.0.1 presents our pavement sections based on our assumed design parameters.

Table 8.0.1 Recommended Pavement Section

Pavement Type	ESALs	Structural Number	Concrete Thickness (inches)	HMAC Thickness (inches)	Untreated Crushed Limestone Base Course Thickness (inches)
Flexible – 1	50,000	1.91	--	2.5	8.0

Rigid – 1	1,000,000	NA	8.0	--	6.0

8.1 Material Specifications

The pavement should be specified, constructed, and tested to meet the following requirements:

1. *Subgrade Remediation* – Remove all vegetation, topsoil and debris. Over-excavate a minimum of 2 feet below the existing ground surface. The excavated soils, free of debris, may be stockpiled for reuse. Compact the resulting subgrade to at least 98% of the maximum density per ASTM D698 method. Backfill the excavation using the stockpiled soils. Place backfill in 6 to 8-inch lifts and compact the soil to a minimum of 98% of the maximum density per ASTM D698 to bring to site to grade. Then, verify stability using proof roll test on the compacted backfill. Conduct proof-roll tests using a loaded dump truck or loaded water truck. Passing proof-roll tests must show less than ½-inch deflection and no area pumping. Any soft spots or areas that exhibit pumping should be excavated and re-compacted.
2. *Crushed Limestone Base Material (Flexible Base)* - Crushed rock as per Texas Department of Transportation (2014), Item 247, **Grade 1-2**. The material should be compacted to a minimum of **95%** of optimum density as per **ASTM D1557**.
3. *Portland Cement Concrete* - BEYOND recommends using a TxDOT **Type P** concrete mix design, or similar.
4. *HMAC* – **Type D** Hot Mix Asphaltic Concrete surface course. This material should meet TxDOT Item 340 specifications.
5. *Prime Coat* – Texas Department of Transportation Item 310.

9.0 LIMITATIONS

Recommendations contained in this report are based on our field observations and subsurface explorations, limited laboratory tests, and our present knowledge of the proposed construction. It is possible that soil conditions will vary between or beyond the points explored. If soil conditions are encountered that differ from those described herein, we should be notified immediately. If the scope of the proposed design or construction changes from that described in this report, our data should also be reviewed.

We prepared this report in substantial compliance with the generally accepted geotechnical engineering practice, as it exists in the area at the time of our study. No warranty is expressed or implied. The recommendations provided in this report are based on the assumption that BEYOND will conduct an adequate program of tests and observations during the construction phase in order to evaluate compliance with our recommendations.

This report may be used only by the client, their design team, and only for the purposes stated, within three years from its issuance. Land use, site conditions (both on site and off site) or other

factors may change over time, and additional work may be required with the passage of time. Any party other than the client who wishes to use this Report shall notify BEYOND of such intended use. Based on the intended use of the report, BEYOND may require that additional work be performed and that an updated report be issued. Non-compliance with any of these requirements by the client or anyone else will release BEYOND from any liability resulting from the use of this report by any unauthorized party.

This is a geotechnical engineering report and is not intended to provide information about possible contaminated soils or the locations of any abandoned underground storage tanks. The owner should consult with an environmental specialist to determine whether this site is suitable from an environmental perspective.

Other standards or documents referenced in any given standard cited in this report, or otherwise relied upon by the authors of this report, are only mentioned in the given standard; they are not incorporated into it or "included by reference," as that latter term is used relative to contracts or other matters of law.

10.0 REFERENCES

1. Bowles, J. E. (1996), *Foundation Analysis and Design,* Fifth Edition, McGraw-Hill Companies, Inc.
2. Structural Engineers Association of California and the Office of Statewide Health Planning and Development Seismic Web Design Tool, www.seismicmaps.org
3. Occupational Safety & Health Administration (OSHA), "Safety and Health Regulations for Construction – Excavations".
4. American Society for Testing and Materials (ASTM) laboratory testing standards.
5. Bureau of Economic Geology, The University of Texas at Austin, Geologic Atlas of Texas, Pecos Sheet, 1976.
6. French, Samuel E., (1999), *Design of Shallow Foundations,* ASCE Press.
7. Coduto, Donald P., (2001), *Foundation Design Principles and Practices,* Second Edition, Prentice Hall, Inc.

APPENDIX

Figure 1: Site Location Map
Figure 2: Borehole Locations Map
Summary of Laboratory Test Results
Log of Boring Key
Logs of Boring: B-1 through B-3
Xenco Analytical Report #615928 (abridged)

Figure 1: Site Location Map

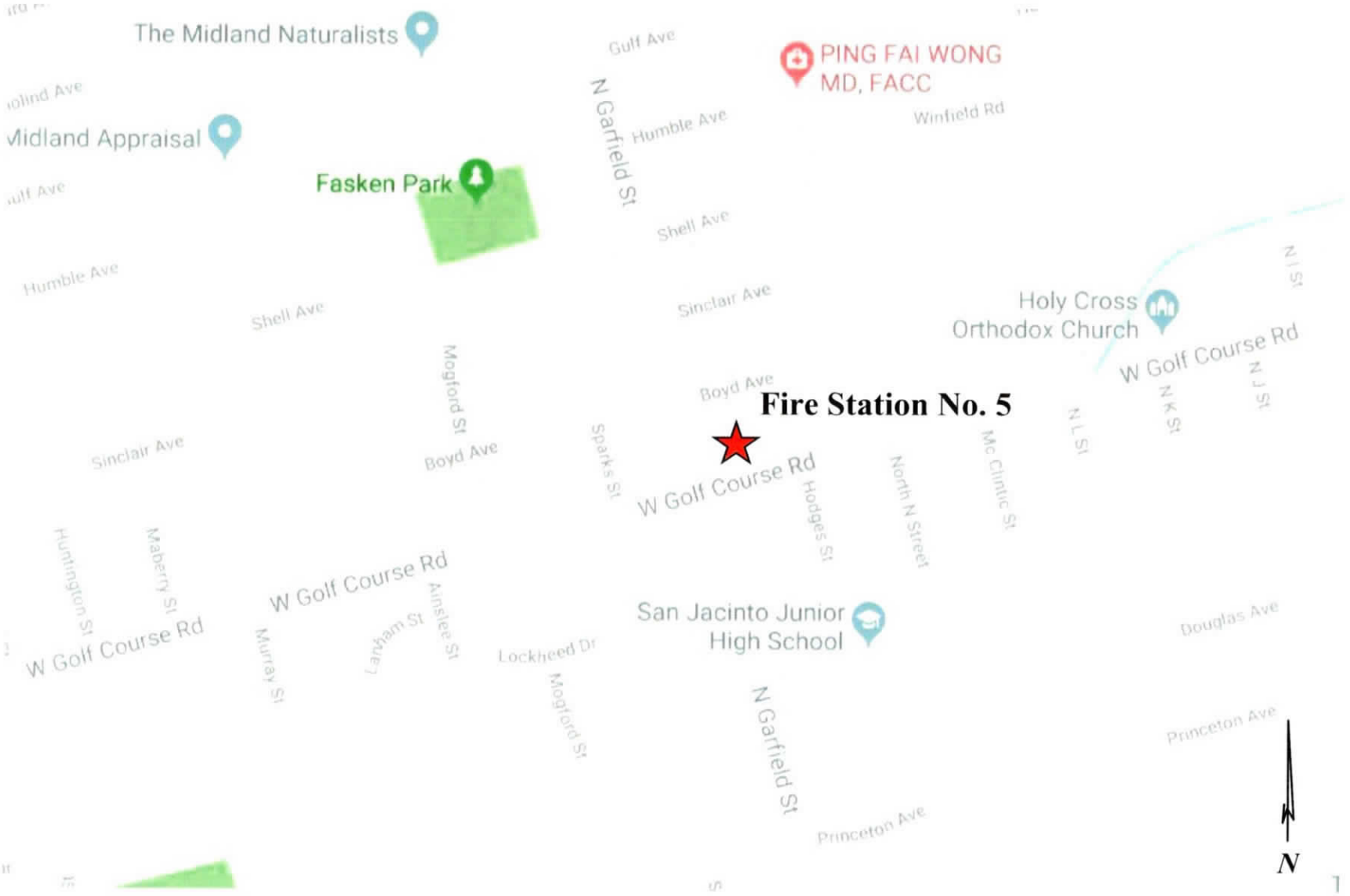

Figure 2: Bore Location Map

BEYOND

Summary of Laboratory Test Results
Fire Station No. 5
BEYOND Project No. GT1902006

Bore No.	Depth (ft)	USCS Soil & Rock Classification	Particle Size Distribution Passing by Weight (%)			Atterberg Limits			In-Situ Water Content (%)	Water Soluble Matter (mg/kg)	
			#4	#40	#200	LL[1]	PL[2]	PI[3]		Chlorides	Sulfates
B-1	0-1.5	Sitly Clayey Sand (SC-SM)	100	96	29				6.6		
B-1	2-3.5	Silty Clayey Sand (SC-SM)	100	98	33	21	14	7	8.7		
B-1	6-7.5	Clayey Sand (SC)	100	96	43	30	14	16	11.0		
B-2	0-1.5	Silty Clayey Sand (SC-SM)	100	97	28	20	15	5	6.7		
B-2	4-5.5	Clayey Sand (SC)	98	76	46				17.1		
B-3	4-5.5	Clayey Sand (SC)	99	95	37	22	13	9	11.5		
B-3	8-9.5	Clayey Sand (SC)	98	89	47				17.4		
B-2 / B-3	2.5.5									75.4	275

NP = Non-plastic

BORING LOG KEY

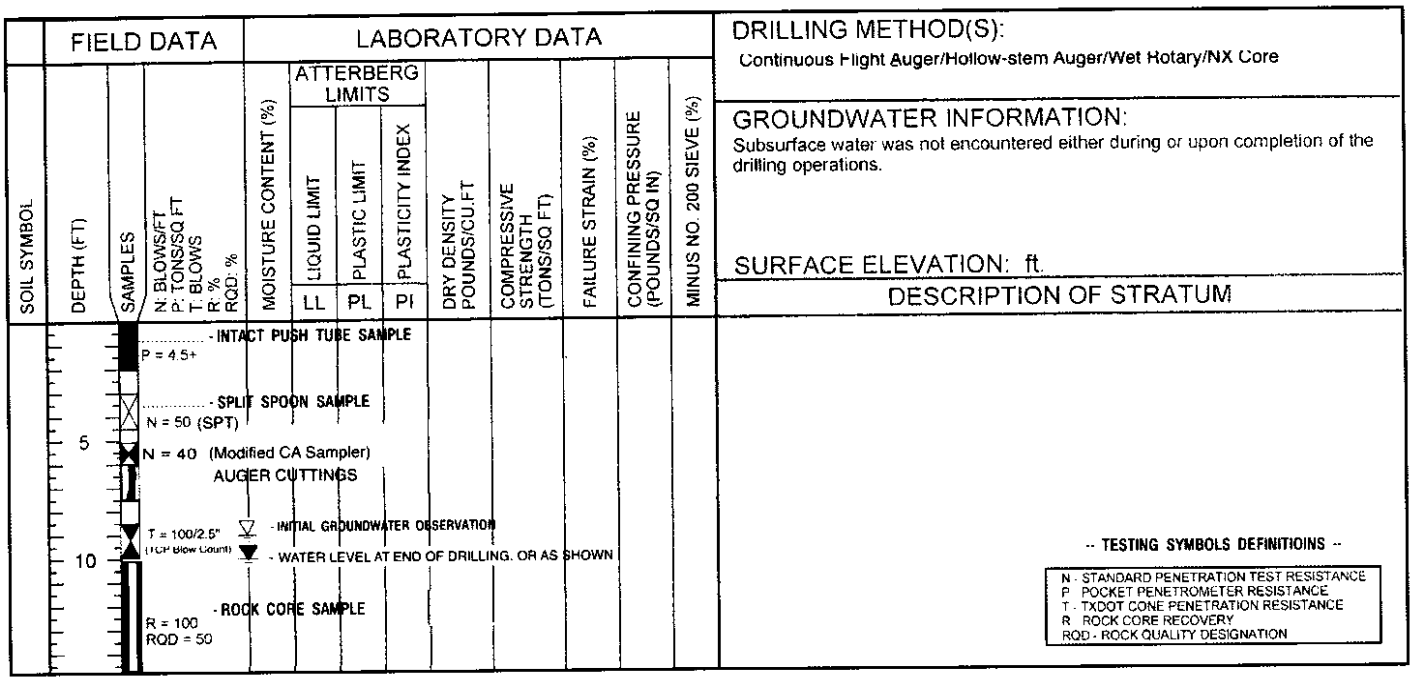

TYPICAL SOIL AND ROCK SYMBOLS (USCS CLASSIFICATION)

- Lean Clay (CL)
- Fat Clay (CH)
- Silt (ML)
- Elastic Silt (MH)
- Silty Sand (SM)
- Clayey Sand (SC)
- Silty, Clayey Sand (SC-SM)
- Poorly-Graded Sand (SP)
- Well-Graded Sand (SW)
- Poorly-Graded Gravel (GP)
- Well-Graded Gravel (GW)
- Clayey Gravel (GC)
- Silty Gravel (GM)
- Silty Clay (CL-ML)
- Claystone
- BASALT
- Limestone
- Sandstone
- **Siltstone**
- Fill Material
- Shale

DEGREE OF WEATHERING

1) Unweathered: No evidence of any chemical or mechanical alteration.
2) Slightly weathered: Slight discoloration on surface, slight alteration along discontinuities, less than 10% of the rock volume altered.
3) Moderately weathered: Discoloring evident, surface pitted and altered with alteration penetrating well below rock surfaces, weathering "halos" evident, 10% to 50% of the rock volume altered.
4) Highly weathered: Entire mass discolored, alteration pervading nearly all of the rock with some pockets of slightly weathered rock noticeable, some minerals leached away.
5) Decomposed: rock reduced to a soil with relicit rock texture, generally molded and crumbled by hand.

SOIL STRUCTURE

Calcareous..... Containing calcium carbonate

Slickensided..... The presence of planes of weakness having a slick and glossy appearance

Interbedded..... Alternating layers of varying material

LOG OF BORING B-1

Beyond Engineering and Testing, LLC
3011-B South County Road 1260
Midland, Texas 79706
Telephone: 432.561.5780
www.BeyondET.com

CLIENT: City of Midland
PROJECT: Fire Station 5
LOCATION: Midland, TX
NUMBER: GT1902006
DATE(S) DRILLED: 2/13/19

DRILLING METHOD(S):
Hollow Stem Auger

GROUNDWATER INFORMATION:
No groundwater encountered during drilling

SURFACE ELEVATION:

SOIL SYMBOL	DEPTH (FT)	SAMPLES	N: BLOWS/FT P: TONS/SQ FT T: BLOWS R: % RQD: %	MOISTURE CONTENT (%)	ATTERBERG LIMITS: LIQUID LIMIT (LL)	ATTERBERG LIMITS: PLASTIC LIMIT (PL)	ATTERBERG LIMITS: PLASTICITY INDEX (PI)	DRY DENSITY POUNDS/CU.FT	COMPRESSIVE STRENGTH (TONS/SQ. FT)	STRAIN AT FAILURE (%)	CONFINING PRESSURE (POUNDS/SQ IN)	MINUS NO. 200 SIEVE (%)	DESCRIPTION OF STRATUM
			N = 11	6.6								29	SILTY, CLAYEY SAND (SC-SM), dark brown, very loose to medium dense, dry to moist, fine grained
			N = 2	8.7	21	14	7					33	Transitions to brown to reddish brown
	5		N = 5										CLAYEY SAND (SC), light brown to tan, loose to very dense, slightly moist, fine grained, calcareous
			N = 12	11.0	30	14	16					43	
			N = 20										
	10												
			N = 28										
	15												Gravelly below 17 ft.
			N = 25/0"										
													Total Depth = 19 ft.

N - STANDARD PENETRATION TEST RESISTANCE
P - POCKET PENETROMETER RESISTANCE
T - TXDOT CONE PENETRATION RESISTANCE
R - ROCK CORE RECOVERY
RQD - ROCK QUALITY DESIGNATION

REMARKS:
GPS COORDINATES: Lat. 32.009785, Long. -102.103713

RENEWABLE LOG - MIDLAND - LOG A GNNL01.GDT - 3/19/19 15:13 - G:\GINT\PROJECTS\2019\BEYOND PROJECTS\GT1902006 - FIRE STATION 5\GT902006 - FIRE STATION 5.GPJ

LOG OF BORING B-2

Beyond Engineering and Testing, LLC
3011-B South County Road 1260
Midland, Texas 79706
Telephone: 432.561.5780
www.BeyondET.com

CLIENT: City of Midland
PROJECT: Fire Station 5
LOCATION: Midland, TX
NUMBER: GT1902006
DATE(S) DRILLED: 2/13/19

DRILLING METHOD(S):
Hollow Stem Auger

GROUNDWATER INFORMATION:
No groundwater encountered during drilling

SURFACE ELEVATION:

SOIL SYMBOL	DEPTH (FT)	SAMPLES	N: BLOWS/FT P: TONS/SQ FT T: BLOWS R: % RQD: %	MOISTURE CONTENT (%)	ATTERBERG LIMITS LIQUID LIMIT LL	PLASTIC LIMIT PL	PLASTICITY INDEX PI	DRY DENSITY POUNDS/CU.FT	COMPRESSIVE STRENGTH (TONS/SQ. FT)	STRAIN AT FAILURE (%)	CONFINING PRESSURE (POUNDS/SQ IN)	MINUS NO. 200 SIEVE (%)	DESCRIPTION OF STRATUM
			N = 5	6.7	20	15	5					28	SILTY, CLAYEY SAND (SC-SM), dark brown, very loose to loose, dry to moist, fine grained
			N = 3										
	5		N = 27	17.1								46	CLAYEY SAND (SC), light brown to tan, medium dense, dry to slightly moist, fine grained, calcareous
			N = 21										
			N = 24										
													Total Depth = 9.5 ft.

N - STANDARD PENETRATION TEST RESISTANCE
P - POCKET PENETROMETER RESISTANCE
T - TXDOT CONE PENETRATION RESISTANCE
R - ROCK CORE RECOVERY
RQD - ROCK QUALITY DESIGNATION

REMARKS:
GPS COORDINATES: Lat. 32.010067, Long. -102.103365

RENEWABLE LOG - MIDLAND - LOG A GNNL01.GDT - 3/19/19 15:13 - G:\GINT\PROJECTS\2019\BEYOND PROJECTS\GT1902006 - FIRE STATION 5\GT902006 - FIRE STATION 5.GPJ

LOG OF BORING B-3

Beyond Engineering and Testing, LLC
3011-B South County Road 1260
Midland, Texas 79706
Telephone: 432.561.5780
www.BeyondET.com

CLIENT: City of Midland
PROJECT: Fire Station 5
LOCATION: Midland, TX
NUMBER: GT1902006
DATE(S) DRILLED: 2/13/19

DRILLING METHOD(S):
Hollow Stem Auger

GROUNDWATER INFORMATION:
No groundwater encountered during drilling

SURFACE ELEVATION:

SOIL SYMBOL	DEPTH (FT)	SAMPLES	N: BLOWS/FT P: TONS/SQ FT T: BLOWS R: % RQD: %	MOISTURE CONTENT (%)	ATTERBERG LIMITS: LIQUID LIMIT (LL)	ATTERBERG LIMITS: PLASTIC LIMIT (PL)	ATTERBERG LIMITS: PLASTICITY INDEX (PI)	DRY DENSITY POUNDS/CU.FT	COMPRESSIVE STRENGTH (TONS/SQ. FT)	STRAIN AT FAILURE (%)	CONFINING PRESSURE (POUNDS/SQ IN)	MINUS NO. 200 SIEVE (%)	DESCRIPTION OF STRATUM
													CLAYEY SAND (SC), dark brown, very loose to medium dense, slightly moist, fine grained
			N = 4										
			N = 3										Transitions to brown
	5		N = 4	11.5	22	13	9					37	
			N = 14										Transitions to light brown to tan, calcareous
			N = 16	17.4								47	
													Total Depth = 9.5 ft.

N - STANDARD PENETRATION TEST RESISTANCE
P - POCKET PENETROMETER RESISTANCE
T - TXDOT CONE PENETRATION RESISTANCE
R - ROCK CORE RECOVERY
RQD - ROCK QUALITY DESIGNATION

REMARKS:
GPS COORDINATES: Lat. 32.010049, Long. -102.103740

RENEWABLE LOG - MIDLAND - LOG A GNNL01.GDT - 3/19/19 15:13 - G:\GINT\PROJECTS\2019\BEYOND PROJECTS\GT1902006 - FIRE STATION 5\GT902006 - FIRE STATION 5.GPJ

Certificate of Analysis Summary 615928

Beyond Engineering & Testing, Midland, TX

Project Name: Fire Station #5

4.149

Project Id: GT1902006
Contact: Israel Juarez
Project Location:

Date Received in Lab: Wed Feb-27-19 11:41 am
Report Date: 05-MAR-19
Project Manager: Holly Taylor

Analysis Requested								
	Lab Id:	615928-001						
	Field Id:	B2/B3						
	Depth:	2-5.5						
	Matrix:	SOIL						
	Sampled:	Feb-26-19 00:00						
Inorganic Anions by EPA 300/300.1	***Extracted:***	Mar-02-19 11:30						
	Analyzed:	Mar-02-19 21:42						
	Units/RL:	mg/kg	RL					
Chloride		75.4	4.99					
Sulfate		275	4.99					

This analytical report, and the entire data package it represents, has been made for your exclusive and confidential use.
The interpretations and results expressed throughout this analytical report represent the best judgment of XENCO Laboratories.
XENCO Laboratories assumes no responsibility and makes no warranty to the end use of the data hereby presented.
Our liability is limited to the amount invoiced for this work order unless otherwise agreed to in writing.

Holly Taylor
Project Manager

GEOTECHNICAL REPORT

Fire Station No. 11
MIDLAND, TEXAS

Prepared For:

City of Midland
300 N. Loraine
Midland, TX 79702

Prepared By:

Beyond Engineering and Testing, LLC
3011-B South County Road 1260
Midland, Texas 79706

432.561.5780 | www.BEYONDET.com

April 11, 2019
BEYOND Project No. GT1902007

Geotechnical Report

Fire Station No. 11

MIDLAND, TEXAS

This Report Prepared By:

Beyond Engineering and Testing, LLC
3011-B South County Road 1260
Midland, TX 79706

432.561.5780 | www.BeyondET.com

Prepared by:

Israel Juarez

Israel Juarez, P.E.
Project Manager

Reviewed by:

Eng-Chew Ang, Ph.D., P.E.
Senior Geotechnical Engineer

FIRM REGISTRATION NO. F-19523 - TEXAS

April 11, 2019 ***Project No. GT1902007***

UNAUTHORIZED USE OR COPYING OF THIS DOCUMENT IS STRICTLY PROHIBITED BY ANYONE OTHER THAN THE CLIENT FOR THE SPECIFIC PROJECT.

Geotechnical Report
Fire Station No. 11
Midland, Texas

TABLE OF CONTENTS

1.0 INTRODUCTION 1
2.0 PROPOSED CONSTRUCTION 1
3.0 FIELD EXPLORATION 1
4.0 SUBSURFACE CONDITIONS 2
4.1 Regional Geology 2
4.2 Subsurface Stratigraphy 3
5.0 LABORATORY TESTS 3
5.1 Geotechnical Laboratory Test Results 4
5.2 Soil Corrosiveness 4
6.0 FOUNDATION DESIGN AND GEOTECHNICAL RECOMMENDATIONS 5
6.1 Shallow Foundation Option 5
6.2 Drilled Shaft Foundations (Alternative Option) 6
6.3 Floating Floor Slab for Building Addition 6
6.4 Lateral Earth Pressures for Underground Structures 7
6.5 Seismic Considerations 8
7.0 FOUNDATION CONSTRUCTION CRITERIA 8
7.1 Site Preparation 8
7.2 Remediation of Subgrade Soils for Shallow Foundation Option 9
7.3 Backfill for Fuel Tank Containment Walls 9
7.5 Drilled Shaft Construction 10
7.6 Open Excavations 11
7.7 Drainage 11
8.0 PAVEMENTS 11
8.1 Material Specifications 12
9.0 LIMITATIONS 13
10.0 REFERENCES 14

APPENDIX

Figure 1: Site Location Map
Figure 2: Borehole Locations Map
Summary of Laboratory Test Results
Log of Boring Key
Logs of Boring: B-1 through B-7
Xenco Analytical Report #615927 (abridged)

Geotechnical Report
Fire Station No. 11
Midland, Texas

1.0 INTRODUCTION

Beyond Engineering and Testing, LLC (BEYOND) presents our subsurface exploration and geotechnical engineering evaluation for the new Fire Station No. 11 project. The proposed project site is located on the northwest corner at the intersection of Gold Gate Drive and Briarwood Avenue (W County Road 60) in Midland, Texas. The project location is shown on Figure 1 within the Appendix under *Site Location Map.*

The purpose of this geotechnical investigation and report is to:

- Explore subsurface soil conditions;
- Conduct field and laboratory testing to characterize the soil properties;
- Provide geotechnical engineering parameters for the design and construction of foundation systems;
- Provide recommendations for pavement thickness design;
- Provide earthwork requirements.

The recommendations contained in this report are based upon field and laboratory test results, engineering analyses, experience with similar soil conditions, and our project understanding.

2.0 PROPOSED CONSTRUCTION

BEYOND understands the proposed project will comprise a new fire station facility. The new facility will include a new two-story fire station building with four apparatus bays and adjacent living quarters. The building will be steel framed and encompass approximately 12,000 square feet. The facility will also include a above ground fuel station, a vehicle wash station, and be surrounded with paved parking lots and driveways.

3.0 FIELD EXPLORATION

BEYOND prepared and executed a field exploration program for the proposed project on February 12 and 13, 2019. We scheduled and performed a total of seven boreholes. The following table presents a summary of our borehole schedule. *Note: We selected bore locations based on the Station 11 Proposed Site Plan drawn by Martinez Architects dated 11.05.2018.*

Table 3.1-Summary of Boreholes

Borehole ID	***Description***	***Borehole Depths***	***Latitude***	***Longitude***
B-1	Fire Station Building	20 feet	32.021576	-102.184481
B-2	Fire Station Building	20 feet	32.021887	-102.184197

Table 3.1-Summary of Boreholes

Borehole ID	Description	Borehole Depths	Latitude	Longitude
B-3	North Private Driveway	15 feet	32.021989	-102.184533
B-4	Private Parking Lot	5 feet	32.022086	-102.184139
B-5	Private Driveway	5 feet	32.022186	-102.184497
B-6	Public Parking Lot	5 feet	32.021485	-102.184030
B-7	South Private Driveway	5 feet	32.021310	-102.184211

BEYOND utilized hollow stem auger methods to advance the boreholes. We collected samples using Standard Penetration Testing (SPT) split spoon samplers. We collected all samples from the samplers in the field, performed visual soil classification, labeled the samples as to location and depth, and bagged soil samples to minimize moisture changes. We conducted the SPT tests in general accordance with ASTM D1586: Standard Test Method for Standard Penetration Test (SPT) and Split-Barrel Sampling of Soils. SPT test results are shown on the attached Boring Logs under the "Field Data" column and are preceded by the letter "N". SPT testing was performed using an automatic hammer.

BEYOND prepared field logs for each boring drilled. The field logs contain visual classifications of the materials encountered during drilling as well as interpolation of the subsurface conditions between samples. We also observed for groundwater while advancing the boreholes. These observations are discussed in subsequent sections of this report.

The project engineer reviewed the field logs, samples, and laboratory data to make appropriate modifications to the field logs. BEYOND classified soils in general accordance with the Unified Soil Classification System (USCS). The soil classification symbols on the boring logs are described in the *Boring Log Key* included in the Appendix. The final logs of boring include modifications based on our laboratory test results and observations performed on the soil samples collected in the field. The final logs of boring describe the materials encountered, strata thickness, the various depths at which the samples were obtained, as well as field test results.

4.0 SUBSURFACE CONDITIONS

4.1 Regional Geology

According to the *Geologic Map of Texas*, Hobbs Sheet (1976), the geology for the proposed project site consists of windblown cover sand (Qcs). These materials are described as fine to medium-grained quartz sand, silty, calcareous, caliche nodules common, grayish red. The underlying formation comprises the Ogallala Formation (To). The Ogallala Formation has a general description of fine to medium grained sand, clay, silt, and gravel with calcareous deposits. The formation is also described as indistinctly bedded to crossbedded and weakly cohesive. The formation contains caliche, limestone, sandstone, and chert. These descriptions are mostly consistent with our observations.

4.2 Subsurface Stratigraphy

The native surficial soils comprise brown silty, clayey sand (SC-SM) and silty sand (SM). The sands are very loose to loose in relative density. This surficial stratum is approximately two feet thick.

The second soil stratum comprises reddish brown clayey sand (SC) and brown silty sand (SM). The sands are very loose to medium dense in relative density from approximately 2 to 6 feet below the ground surface.

The third soil stratum comprises tan clayey sand (SC). This stratum extends from about 6 feet below the ground surface to the bore termination depths The sand is medium dense to very dense in relative density. The sand possesses calcareous deposits.

The strata descriptions are generalized and depth ranges are approximate because boundaries between different strata and changes within a stratum are seldom clear and abrupt in the field. Detailed logs of boring in the Appendix present the stratum descriptions, sampling types used, laboratory test data, and additional field data. The Boring Log Key, which defines the terms and descriptive symbols used on each boring log, is also presented in the Appendix.

BEYOND did not encounter groundwater during drilling operations. Upon completing drilling operations, the drill crew backfilled the boreholes using soil cuttings. Based on the Texas Water Development Board (TWDB) Groundwater Database of water wells at approximately ½ -mile radius from the project site locations, minimum groundwater levels from nearby water wells was recorded at a depth of approximately 56 feet to 100 feet below ground surface. These measurements are from submitted driller's well reports from 2011 and 2012.

It is imperative to note that the short-term groundwater level observations performed as part of this study are not an accurate evaluation of groundwater levels at the project site and should not be interpreted as a comprehensive groundwater study. The observations made during this investigation may also not represent conditions at the time of construction and it should be understood the presence of groundwater may influence certain construction activities and long-term performance of foundations and pavements. If a detailed groundwater study is desired, a groundwater hydrologist should be retained to perform these services.

5.0 LABORATORY TESTS

BEYOND performed various laboratory tests to determine the soil's physical properties. These tests allow us to classify soils and to assess soil performance under the project design conditions. Laboratory tests are presented in each respective *Log of Boring* and in the *Summary of Laboratory Tests* in the Appendix. The project geotechnical engineer assigned appropriate laboratory tests on selected soil samples. BEYOND performed the following laboratory methods for soil analyses:

- ASTM D2487: Standard Practice for Classification of Soils for Engineering Purposes (Unified Soil Classification System);
- ASTM D4318: Standard Test Methods for Liquid Limit, Plastic Limit, and Plasticity Index of Soils;
- ASTM C136: Standard Test Method for Sieve Analysis of Fine and Coarse Aggregates;
- ASTM D1140: Standard Test Method for Amount of Material in Soils finer than No. 200 (75- μ) Sieve;
- ASTM D2216: Standard Test Method for Laboratory Determination of Water (Moisture) Content of Soil and Rock by Mass, and;
- EPA 300/300.1: Inorganic Anions, Soluble Chloride and Soluble Sulfate Content.

5.1 Geotechnical Laboratory Test Results

Per the Unified Soil Classification System, gravel is considered material retained on the No.4 sieve. Sand is considered material passing the No.4 sieve and retained on the No. 200 mesh sieve. Silt and clay are considered materials passing the No. 200 mesh sieve. In general, 100 % of the native soils pass the No. 4 mesh sieve. Soils passing the No. 200 mesh sieve ranges from 25 to 40%.

Based on our field observations, the native clayey sand soils possess low plasticity. We performed Atterberg Limits tests to verify our observations. Test results on the clayey sand indicates a Plastic Index (PI) values ranging from 7 to 9 with Liquid Limits values ranging from 19 to 22. Based on FHWA-NHI-10-016 for the method of identifying potentially expansive soils as shown in Table 5.1.1, the soils at this proposed project site should be considered to possess a low to negligible swell potential.

Table 5.1.1 – Method of Identifying Potentially Expansive Soils (from FHWA-NHI-10-016)

Liquid Limit (%)	Plasticity Index	Potential Swell (%)	Potential Swell Classification
< 50	< 25	< 0.5	Low
50 to 60	25 to 35	0.5 to 1.5	Marginal
> 60	> 35	> 1.5	High

Moisture content tests indicate the soils at this project site are relatively dry to slightly moist to considerable depths. Moisture content ranges from 5 to 12%.

5.2 Soil Corrosiveness

BEYOND obtained the services of Xenco Laboratories to perform analytical tests to determine the content of soluble sulfate and chloride in the soils at foundation bearing depths. The Xenco test data is included on the *Summary of Laboratory Tests*.

Soluble Sulfates and Chlorides

Bore No.	*Depth (feet)*	*Material Type*	*Soluble Chlorides (mg/kg)*	*Soluble Sulfates (mg/kg)*
B-1/B-2 (composite)	2-5.5	SC-SM	<4.96	<4.96

These test results indicate low chloride and sulfate contents. Based on these results, the soils at this site possess a low corrosion potential for chlorides on metal and a low corrosion potential for sulfates on concrete.

6.0 FOUNDATION DESIGN AND GEOTECHNICAL RECOMMENDATIONS

BEYOND understands the proposed project will comprise a new fire station facility. The new facility will include a new two-story fire station building with four apparatus bays and adjacent living quarters. The building will be steel framed and encompass approximately 12,000 square feet. The facility will also include a above ground fuel station, a vehicle wash station, and be surrounded with paved parking lots and driveways.

In general, the native soils at the proposed site possess a relatively loose condition to about six feet below the ground surface. Therefore, we will require remediation of loose surficial soils from the existing ground surface to at least 5 feet below the ground surface in accordance with Section 7.2.

Alternately, the design team may use relatively short drilled shafts. This option would require relatively less earthwork. The floor slab would not have to be suspended but may be cast on the ground. Earthwork requirements are provided under Section 7.

6.1 Shallow Foundation Option

The final grading plan was not available during the preparation of this report. We anticipate finished grade is within 12-inches of the existing surface elevation. Shallow footings should bear on compacted soils placed in accordance to Section 7. Spread footings should bear at least 2-feet below finished grade and should have a minimum width of 2-feet. Spread footings bearing at least 2-feet below the ground surface can use a net allowable bearing capacity of 3,000 psf. Continuous footing should have a minimum width of 12-inches and bear at least 18 inches below existing grade. Continuous footings may use a net allowable bearing capacity of 1,200 psf. This assumes a safety factor of 3 against general shear failure.

Proper drainage must be maintained during construction and throughout the life of the structures to provide for improved shallow foundation performance. Other design and construction recommendations as outlined in the ACI design manual should be followed.

6.2 Drilled Shaft Foundations (Alternative Option)

As an alternate option and to reduce earthwork due to remediation requirements, the design team may opt to use relatively short drilled shafts to support the proposed building.

Drilled shafts should bear at least 7-feet below the existing ground surface. At this depth, the drilled shafts may use an allowable, unit end bearing capacity of **5,000 psf**. For analysis of drilled shafts, we computed end bearing using the Federal Highway Administration Drilled Shaft Manual, FHWA-NHI-10-016. We utilize a factor of safety of 3 for allowable end bearing capacity. Settlement of the drilled shaft foundation is anticipated to be less than ¾-inch. All drilled shafts should have a minimum diameter of 18 inches. The length of the drilled shafts should be determined by the structural engineer to satisfy axial and lateral loading conditions.

To maintain the integrity of the drilled shafts and to reduce excessive stress overlap from adjacent shafts/piles, the center-to-center spacing between adjacent shafts should be at least 3 times the diameter of the larger shafts, and the edge-to-edge spacing between adjacent shafts should not be less than 3 feet.

6.3 Floating Floor Slab for Building Addition

A floating slab-on-grade is structurally independent of the footings. This option is viable for the proposed building. We recommend the native soils underneath the building floor slab be excavated and recompacted as described in Section 7. BEYOND recommends a crushed stone layer immediately below the floor slab. This will provide increased support, assist in reducing differential floor settlements, and provide uniform friction across the bottom of the slab. Most importantly, the crushed stone allows truck traffic during construction without rutting. A flat surface under the concrete slab reduces irregular shrinkage cracks. The floor slab for the new fire station will essentially act as a pavement as well. Therefore, we recommend using at least six (6) inches of crushed stone that meets TxDOT Item 247 (2014), Grade 3, which is consistent with our pavement recommendations in Section 8. This should provide a composite modulus of subgrade reaction, k, of at least 200 psi/inch (where this value represents the subgrade reaction value corresponding to a 1-ft by 1-ft plate).

For square footing on cohesionless soil subgrade, the subgrade modulus value may be modified for various foundation widths based upon the following equation:

$$K_s = K_1\left[\frac{B+1}{2B}\right]^2$$

Where:

K_s = adjusted modulus of subgrade reaction based on actual footing width;
K_1 = modulus of subgrade reaction corresponds to a 1-ft x 1-ft plate;
B = footing width (in feet)

The floor slab thickness should be designed by the structural engineer.

Based on our experience of similar projects, we provide the following guidelines for concrete floor slab design and construction. The concrete specifications should require a low water/cement ratio and the concrete should be placed with a relatively dry slump. Control joints should be constructed while the concrete is relatively green, before it shrinks. Spacing for control joints should be no greater than 15 feet to control shrinkage cracks.

In order to improve aesthetics by reducing shrinkage cracks and irregular surface textures, BEYOND also recommends the following: the ready-mix concrete should arrive at the target slump and the contractor should not be allowed to add water to the mixture. Water sprayed onto the slab during 'bull floating' must be minimal; otherwise, alligator cracking of the surface may develop. If vapor barriers are used, the designer should also consider adding a thin sand cushion on top of the vapor barrier. This bedding sand allows the concrete to cure evenly from top to bottom. Other design and construction recommendations as outlined in the ACI design manual should be followed.

6.4 Lateral Earth Pressures for Underground Structures

The new fire station facility will include a fuel station with an underground fuel tank. The fuel tank might require a containment system. To design the system the design team will require lateral earth pressure parameters. The general equations per Rankine's Theory for active and passive pressures may be computed using the following equations:

$$\sigma_a = K_a * \gamma_t * z$$

$$\sigma_p = K_p * \gamma_t * z$$

Where:
K_a = Coefficient of lateral earth pressure, active condition
K_p = Coefficient of lateral earth pressure, passive conditions
z = Distance from the top of the wall
γ_t = Total Unit Weight of Soil

Backfilling around the underground fuel tank will likely consist of native sandy soils. The following table provides our recommended coefficient of lateral earth pressure.

Table 6.3-Lateral Earth Pressures for Temporary Shoring

Soil Type	***Condition***	***Equivalent Fluid Pressure, pcf***
Native Sand ϕ'=30 γ_t=120 pcf	At-Rest, k_o=0.5	
	Active, k_a=0.67	

The values apply only to cases where the ground surface is level and assumes a smooth wall-soil interface. BEYOND should be contacted to provide suitable values for cases where the ground

surface is sloped. These earth pressure values do not include safety factors or hydrostatic pressures. Surcharge loads should also be considered if applicable.

When backfilling adjacent to the retaining walls, the contractor should be careful not to over-compact adjacent to the walls to reduce the potential of adding additional lateral earth pressure and inducing additional stress on the walls. The use of portable compaction equipment is suitable adjacent to these walls.

6.5 Seismic Considerations

The following seismic parameters are based on the 2015 International Building Code (IBC). We used the seismic design web tool developed by the Structural Engineers Association of California and the Office of Statewide Health Planning and Development (www.seismicmaps.org). We selected a Site Class D for this project site. The website provided the following parameters to be used with the structural designs at this site.

Table 6.4.1 Recommended Seismic Parameters

Mapped Spectral Accelerations	*Site Coefficients*	*Max Spectral Response Accelerations*
S_s = 0.135 g	F_a = 1.6	S_{Ms} = 0.216 g
S_1 = 0.036 g	F_v = 2.4	S_{M1} = 0.086 g

7.0 FOUNDATION CONSTRUCTION CRITERIA

In this section, we provide various specifications and construction recommendations to allow earthwork to meet the intent of the geotechnical parameters provided in Section 6. We recommend that BEYOND be retained to provide verification testing services during construction. This allows us to verify that construction of foundation items follows our recommendations.

7.1 Site Preparation

Prior to construction, the contractor should establish proper and positive drainage to maintain a relatively dry condition in the area of proposed construction. This will be very important if any work is attempted during prolonged rainfall periods. Water ponding in construction areas should be avoided.

Site preparation should begin by removing surface debris, vegetation, organic topsoil, and major root systems, if any. Remove soils to a depth of at least two feet below the ground surface. Excavated soils, free of debris, can be stockpiled for reuse. Compact the resulting, exposed subgrade soils to 98% of the maximum dry density as determined by ASTM D698. Use the excavated-stockpiled soils, free of debris, to backfill. Place backfill in 6 to 8-inch loose lifts and compact to 98% of the maximum dry density as determined by ASTM D698. *If the new building will use shallow footings for foundation support, the subgrade soil remediation should be performed in accordance with Section 7.2.*

7.2 Remediation of Subgrade Soils for Shallow Foundation Option

The soils underneath the proposed fire station building, fuel station and vehicle wash building should be excavated to at least five feet below the existing ground surface. Extend removal horizontally for at least five feet beyond the building's footprint. Excavated soils, free of debris, can be stockpiled for reuse. Compact the resulting, exposed subgrade soils to 98% of the maximum dry density as determined by ASTM D698. Use the excavated-stockpiled soils, free of debris, to backfill. Place backfill in 6 to 8-inch loose lifts and compact to 98% of the maximum dry density as determined by ASTM D698.

If additional fill is required to achieve target grade, then use imported select fill that meets one of the following soil classifications: SC-SM, SM, SC, GC or GW-GC. In addition, select fill shall possess a plasticity index, PI of less than 18 and shall not possess particle sizes greater than 3-inches.

Select fill should be placed in 6 to 8-inch compacted lifts and should be compacted to a minimum of 98% of the maximum dry density as determined by ASTM D698. The fill should be moisture conditioned within 3% of optimum moisture content, or drier. Placement density should be verified by nuclear density tests, with at least one test per 2,500 square feet for each lift under buildings and one test per 5,000 square feet in other areas.

7.3 Backfill for Fuel Tank Containment Walls

Backfill for containment walls may comprise native soils. Backfill can be placed in 12-inch lifts and compacted to at least 90% per ASTM D698. The top 18 inches should be compacted to at least 98%. When backfilling adjacent to the retaining walls, the contractor should be careful not to over-compact adjacent to the walls to reduce the potential of adding additional lateral earth pressure and inducing additional stress on the walls. The use of portable compaction equipment is suitable adjacent to these walls.

7.4 Shallow Foundation Construction

The following construction criteria and general guidance should be observed during shallow foundation construction:

1. Remove loose soils from footing excavations. Do not allow loose, excavated soils from the footings to be spread out within the building pad. These loose soils will cause differential settlements.

2. Excavations for footings should be accomplished with a smooth-mouthed bucket. If a toothed bucket is used, excavation with this bucket should be terminated a few inches above final grade and the excavation completed with a smooth-mouthed bucket or by manual labor. Debris or loose material in the bottom of the excavation should be re-compacted or removed prior to placing concrete. This is especially important along footing excavations.

3. The foundation excavation should be sloped sufficiently to create internal sumps for runoff collection and removal. Foundation excavations subject to rainfall and possible deterioration from accumulated water should be protected using a protective "mud-slab" (concrete). If surface runoff water or groundwater seepage accumulates at the bottom of the foundation excavation, it should be collected and removed and not allowed to adversely affect the quality of the bearing surface.

4. The foundation excavations should be checked for size and cleaned of loose material and debris prior to the placement of reinforcing steel. Precautions should be taken during the placement of reinforcement and concrete to prevent the loose excavated material from falling into the excavation.

5. Prior to the placement of concrete, any water must be removed from the foundation excavation.

6. Prompt placement of concrete in the excavation as it is completed, cleaned, and observed is strongly recommended.

7.5 Drilled Shaft Construction

The following items are important for the successful completion of drilled shaft foundations:

1. The Geotechnical Engineer, or his representative, should observe all drilled shaft excavations. This inspection is to verify proper depth, bearing stratum, cleanliness, rebar placement, and other observations regarding the drilled shaft construction. Cleanliness at the bottom of the excavation is especially critical. Excess loose material at the bottom of the excavation will adversely affect the end bearing capacity.

2. The drilled shaft excavations should be checked for size and to determine that all loose material and free water has been removed prior to the placement of concrete or the foundation pole. Precautions should be taken during the placement to prevent loose material from falling into the excavation. We recommend that the construction contract include a budget for temporary steel casing, in case the sloughing of sands or entry of water prevents the proper construction of the shafts.

3. Prompt placement of concrete in the excavation as it is completed, cleaned, and inspected is strongly recommended. Under no circumstances should an excavation be drilled if the foundation cannot be completed before the end of the workday.

4. The reinforcement steel cage placed in the shaft should be designed to be stable and centered during the placement of concrete.

5. We did not encounter groundwater during our field investigation. If groundwater is encountered during placement of the drilled shafts, then the contractor should use a

temporary steel casing in which case the contractor should be prepared to perform dewatering and use a tremie tube to place the concrete.

7.6 Open Excavations

Temporary construction slopes and/or permanent embankment slopes should be protected from surface runoff water. Site grading should be designed to allow drainage at planned areas where erosion protection is provided, instead of allowing surface water to flow down unprotected slopes. Surcharge loads, either static or dynamic, should not be applied to an excavation slope. Construction equipment should be prevented from traveling along or near the top of the excavation slope. Monitoring of temporary slopes, trenches, and dewatering during construction should be undertaken by the contractor to detect early warnings of movement within slopes, structures, pavements, etc.

In all cases of excavations in soils, sloped excavations and trench shields are required for excavations greater than four feet in depth. The contractor's "Competent Person" (as defined by OSHA) must inspect each trench to determine the type of bench or slope that is actually required. With all excavations, only a "competent person" shall determine whether sloped, benched, or trench shields can be used. OSHA and applicable state and local standards should be observed and followed. Site safety is the responsibility of the contractor.

7.7 Drainage

Proper drainage should be provided away from the foundation elements during all phases of construction and post-construction grading. Proper drainage is essential to the long-term stability of the structure. Ponding of water near the foundation elements from improper drainage should not be permitted. Downspouts should use splash blocks that divert water away from the foundation. Planters near buildings should be lined and should not allow saturation of soils near the foundation.

8.0 PAVEMENTS

We recommend using reinforced Portland Cement Concrete (PCC) pavements for the fire engine exit/entrance driveways, apparatus bay floor slab, and private parking lot. For the public parking lot, we anticipate relatively light traffic comprising compact cars, pickup trucks and occasional delivery trucks. Therefore, for the public parking lot area and driveway, either a PCC or hot mix asphalt cement (HMAC) type pavement may be used.

The sandy native soils, when well compacted should provide a CBR of about 8. This is roughly equivalent to a resilient modulus of approximately 9,500 psi or a modulus of subgrade reaction of about 180 psi/inch. The following table provides our recommendations for pavement thicknesses based on our experience with similar facilities.

The proposed pavement sections presented here are calculated based solely on engineering structural parameters. Construction cost is not included in this analysis. Daily traffic volume or 18-kips Equivalent Single-Axle Loads (ESALs) for the proposed pavement was not available

during preparation of this report. For our analysis, we estimated that the proposed pavement will have the following traffic volumes:

- Light traffic area in the parking lots with assumed 50,000 ESALs (flexible pavement);
- Heavy traffic area for the fire engine exit/entrance drive way with assumed 1,000,000 ESALs (rigid pavement)

BEYOND calculated pavement section options in accordance with the *AASHTO Guide for Design of Pavement Structures 1993*. For pavement analysis we assumed the following parameters:

- Design life: 20 years;
- Reliability: 85% (Flexible and Rigid)
- Overall Standard Deviation: 0.45 (Flexible), 0.35 (Rigid);
- Initial Serviceability: 4.2 (Flexible), 4.5 (Rigid);
- Terminal Serviceability: 2.0 (Flexible), (Rigid);
- Asphaltic Concrete: Layer structural coefficient of 0.44, and a drainage coefficient of 1.0; and
- Untreated Base Course: Layer structural coefficient of 0.12, and a drainage coefficient of 1.0.
- Concrete compression strength: 3,500 psi

Table 8.0.1 presents our pavement sections based on our assumed design parameters.

Table 8.0.1 Recommended Pavement Section

Pavement Type	ESALs	Structural Number	Concrete Thickness (inches)	HMAC Thickness (inches)	Untreated Crushed Limestone Base Course Thickness (inches)
Flexible	50,000	1.91	--	2.5	8.0
Rigid – 1 (Light Duty)	50,000	NA	5.0	--	0.0
Rigid – 2 (Heavy Duty)	1,000,000	NA	8.0	--	6.0

8.1 Material Specifications

The pavement should be specified, constructed, and tested to meet the following requirements:

1. *Subgrade Remediation* – Remove all vegetation, topsoil and debris. Over-excavate a minimum of 2 feet below the existing ground surface. The excavated soils, free of debris, may be stockpiled for reuse. Compact the resulting subgrade to at least 98% of the maximum density per ASTM D698 method. Backfill the excavation using the stockpiled soils. Place backfill in 6 to 8-inch lifts and compact the soil to a minimum of 98% of the maximum density per ASTM D698 to bring to site to grade. Then, verify stability using proof roll test on the compacted backfill. Conduct proof-roll tests using a loaded dump

truck or loaded water truck. Passing proof-roll tests must show less than ½-inch deflection and no area pumping. Any soft spots or areas that exhibit pumping should be excavated and re-compacted.

2. *Crushed Limestone Base Material (Flexible Base)* - Crushed rock as per Texas Department of Transportation (2014), Item 247, **Grade 1-2**. The material should be compacted to a minimum of **95%** of optimum density as per **ASTM D1557**.

3. *Portland Cement Concrete* - BEYOND recommends using a TxDOT **Type P** concrete mix design, or similar.

4. *HMAC* – **Type D** Hot Mix Asphaltic Concrete surface course. This material should meet TxDOT Item 340 specifications.

5. *Prime Coat* – Texas Department of Transportation Item 310.

9.0 LIMITATIONS

Recommendations contained in this report are based on our field observations and subsurface explorations, limited laboratory tests, and our present knowledge of the proposed construction. It is possible that soil conditions will vary between or beyond the points explored. If soil conditions are encountered that differ from those described herein, we should be notified immediately. If the scope of the proposed design or construction changes from that described in this report, our data should also be reviewed.

We prepared this report in substantial compliance with the generally accepted geotechnical engineering practice, as it exists in the area at the time of our study. No warranty is expressed or implied. The recommendations provided in this report are based on the assumption that BEYOND will conduct an adequate program of tests and observations during the construction phase in order to evaluate compliance with our recommendations.

This report may be used only by the client, their design team, and only for the purposes stated, within three years from its issuance. Land use, site conditions (both on site and off site) or other factors may change over time, and additional work may be required with the passage of time. Any party other than the client who wishes to use this Report shall notify BEYOND of such intended use. Based on the intended use of the report, BEYOND may require that additional work be performed and that an updated report be issued. Non-compliance with any of these requirements by the client or anyone else will release BEYOND from any liability resulting from the use of this report by any unauthorized party.

This is a geotechnical engineering report and is not intended to provide information about possible contaminated soils or the locations of any abandoned underground storage tanks. The owner should consult with an environmental specialist to determine whether this site is suitable from an environmental perspective.

Other standards or documents referenced in any given standard cited in this report, or otherwise

relied upon by the authors of this report, are only mentioned in the given standard; they are not incorporated into it or "included by reference," as that latter term is used relative to contracts or other matters of law.

10.0 REFERENCES

1. Bowles, J. E. (1996), *Foundation Analysis and Design,* Fifth Edition, McGraw-Hill Companies, Inc.
2. Structural Engineers Association of California and the Office of Statewide Health Planning and Development Seismic Web Design Tool, www.seismicmaps.org
3. Occupational Safety & Health Administration (OSHA), "Safety and Health Regulations for Construction – Excavations".
4. American Society for Testing and Materials (ASTM) laboratory testing standards.
5. Bureau of Economic Geology, The University of Texas at Austin, Geologic Atlas of Texas, Hobbs Sheet, 1976.
6. French, Samuel E., (1999), *Design of Shallow Foundations,* ASCE Press.
7. Coduto, Donald P., (2001), *Foundation Design Principles and Practices,* Second Edition, Prentice Hall, Inc.

APPENDIX

Figure 1: Site Location Map
Figure 2: Borehole Locations Map
Summary of Laboratory Test Results
Log of Boring Key
Logs of Boring: B-1 through B-7
Xenco Analytical Report #615927 (abridged)

Figure 1: Site Location Map

Figure 2: Bore Location Map

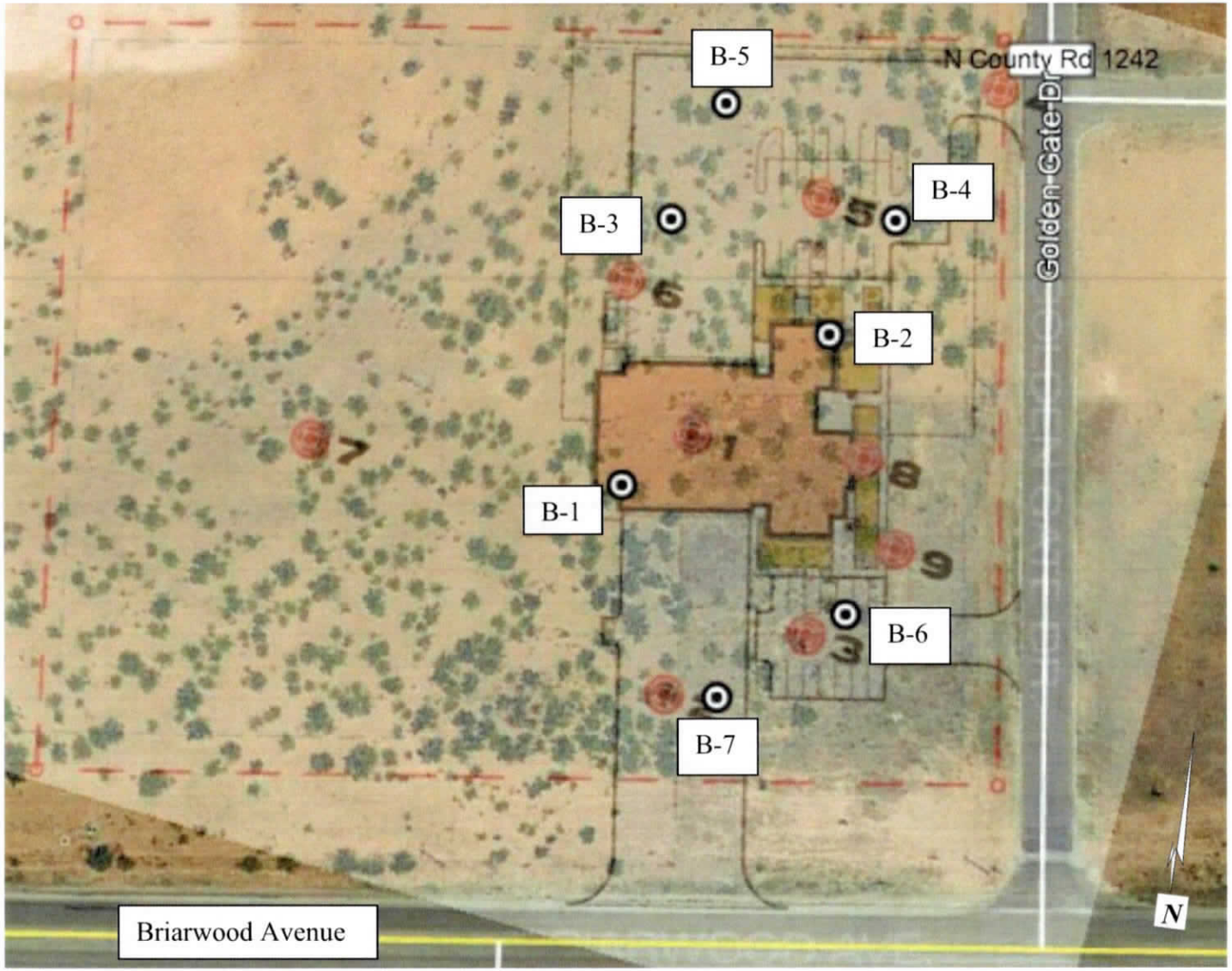

BEYOND

Summary of Laboratory Test Results
Fire Station No. 11
BEYOND Project No. GT1902007

Bore No.	Depth (ft)	USCS Soil & Rock Classification	Particle Size Distribution Passing by Weight (%)			Atterberg Limits			In-Situ Water Content (%)	Water Soluble Matter (mg/kg)	
			#4	#40	#200	LL[1]	PL[2]	PI[3]		Chlorides	Sulfates
B-1	0-1.5	Silty Clayey Sand (SC-SM)	100	96	32				8.1		
B-1	4-5.5	Clayey Sand (SC)	100	97	35	22	13	9	7.5		
B-1	8-9.5	Clayey Sand (SC)	100	96	40				6.0		
B-2	0-1.5	Silty Sand (SM)				NP	NP	NP			
B-2	2-3.5	Clayey Sand (SC)	100	96	37				10.5		
B-2	6-7.5	Clayey Sand (SC)	100	97	37				6.0		
B-3	0-1.5	Silty Clayey Sand (SC-SM)	100	96	27	19	12	7	5.5		
B-3	4-5.5	Clayey Sand (SC)	100	96	33				5.4		
B-5	0-1.5	Silty Clayey Sand (SC-SM)	100	97	25				6.3		
B-6	4-5.5	Clayey Sand (SC)				21	13	8			
B-7	2-3.5	Clayey Sand (SC)	100	96	37				12.2		
B-2 / B-3	2.5.5									<4.96	<4.96

NP = Non-plastic

BORING LOG KEY

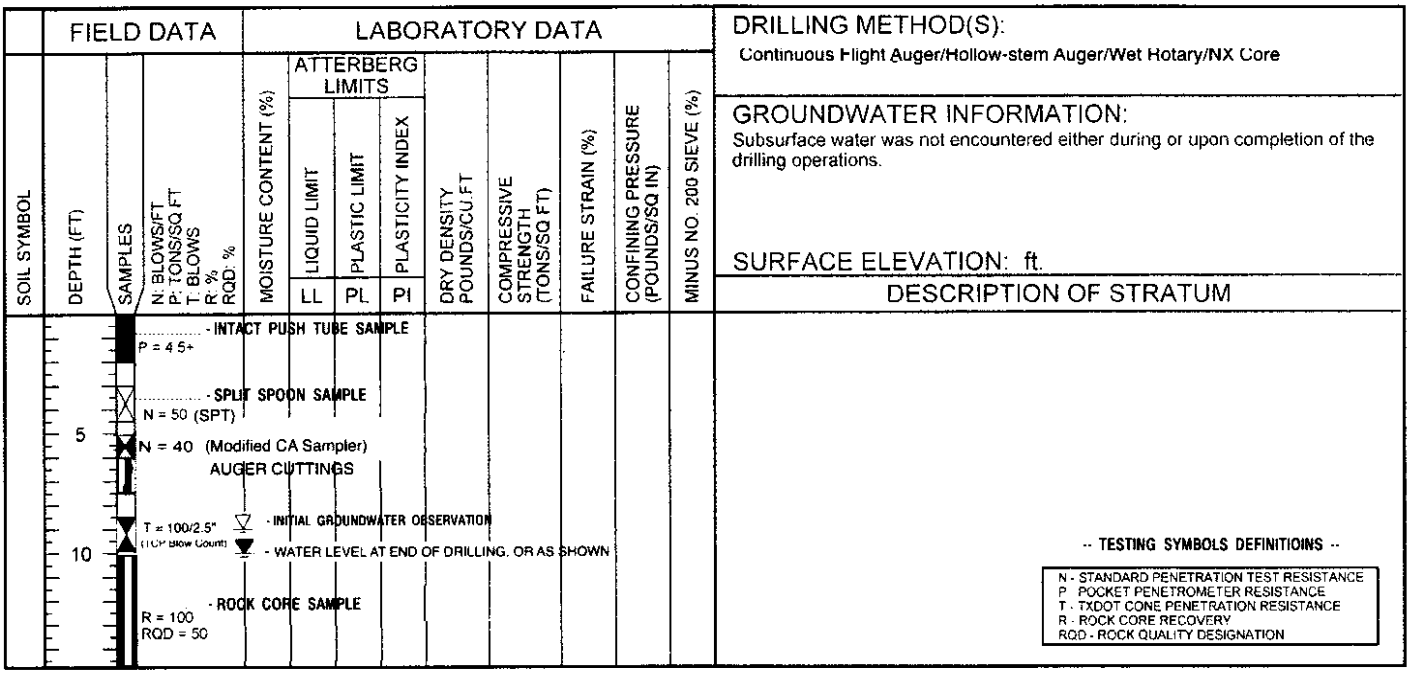

TYPICAL SOIL AND ROCK SYMBOLS (USCS CLASSIFICATION)

- Lean Clay (CL)
- Fat Clay (CH)
- Silt (ML)
- Elastic Silt (MH)
- Silty Sand (SM)
- Clayey Sand (SC)
- Silty, Clayey Sand (SC-SM)
- Poorly-Graded Sand (SP)
- Well-Graded Sand (SW)
- Poorly-Graded Gravel (GP)
- Well-Graded Gravel (GW)
- Clayey Gravel (GC)
- Silty Gravel (GM)
- Silty Clay (CL-ML)
- Claystone
- BASALT
- Limestone
- Sandstone
- **Siltstone**
- Fill Material
- Shale

DEGREE OF WEATHERING

1) Unweathered: No evidence of any chemical or mechanical alteration.
2) Slightly weathered: Slight discoloration on surface, slight alteration along discontinuities, less than 10% of the rock volume altered.
3) Moderately weathered: Discoloring evident, surface pitted and altered with alteration penetrating well below rock surfaces, weathering "halos" evident, 10% to 50% of the rock volume altered.
4) Highly weathered: Entire mass discolored, alteration pervading nearly all of the rock with some pockets of slightly weathered rock noticeable, some minerals leached away.
5) Decomposed: rock reduced to a soil with relicit rock texture, generally molded and crumbled by hand.

SOIL STRUCTURE

Calcareous..... Containing calcium carbonate

Slickensided..... The presence of planes of weakness having a slick and glossy appearance

Interbedded..... Alternating layers of varying material

LOG OF BORING B-1

BEYOND Engineering & Testing
Beyond Engineering and Testing, LLC
3011-B South County Road 1260
Midland, Texas 79706
Telephone: 432.561.5780
www.BeyondET.com

CLIENT: City of Midland
PROJECT: Fire Station 11
LOCATION: Midland, TX
NUMBER: GT1902007
DATE(S) DRILLED: 2/12/19

DRILLING METHOD(S):
Hollow Stem Auger

GROUNDWATER INFORMATION:
No groundwater encountered during drilling

SURFACE ELEVATION:

FIELD DATA / LABORATORY DATA

SOIL SYMBOL	DEPTH (FT)	SAMPLES	N: BLOWS/FT P: TONS/SQ FT T: BLOWS R: % RQD: %	MOISTURE CONTENT (%)	ATTERBERG LIMITS: LIQUID LIMIT (LL)	ATTERBERG LIMITS: PLASTIC LIMIT (PL)	ATTERBERG LIMITS: PLASTICITY INDEX (PI)	DRY DENSITY POUNDS/CU.FT	COMPRESSIVE STRENGTH (TONS/SQ. FT)	STRAIN AT FAILURE (%)	CONFINING PRESSURE (POUNDS/SQ IN)	MINUS NO. 200 SIEVE (%)	DESCRIPTION OF STRATUM
			N = 3	8.1								32	2 in. Topsoil SILTY, CLAYEY SAND (SC-SM), dark brown, very loose, slightly moist, fine grained,
			N = 5										CLAYEY SAND (SC), reddish brown, loose to very dense, dry to moist, fine grained,
	5		N = 8	7.5	22	13	9					35	
			N = 27										Transitions to tan, calcareous
			N = 29	6.0								40	
	10												
			P = N/A	10.0				105					
	15												
			N = 50/4"										Transitions to weakly cemented
													Total Depth = 19.5 ft.

N - STANDARD PENETRATION TEST RESISTANCE
P - POCKET PENETROMETER RESISTANCE
T - TXDOT CONE PENETRATION RESISTANCE
R - ROCK CORE RECOVERY
RQD - ROCK QUALITY DESIGNATION

REMARKS:
GPS COORDINATES: Lat. 32.021576, Long. -102.184481
2 in. of topsoil was removed

RENEWABLE LOG - MIDLAND - LOG A GNNL01.GDT - 4/5/19 17:18 - G:\GINT\PROJECTS\2019\BEYOND PROJECTS\GT1902007 - FIRE STATION 11\GT902007 - FIRE STATION 11.GPJ

LOG OF BORING B-2

Beyond Engineering and Testing, LLC
3011-B South County Road 1260
Midland, Texas 79706
Telephone: 432.561.5780
www.BeyondET.com

CLIENT: City of Midland
PROJECT: Fire Station 11
LOCATION: Midland, TX
NUMBER: GT1902007
DATE(S) DRILLED: 2/13/19

DRILLING METHOD(S):
Hollow Stem Auger

GROUNDWATER INFORMATION:
No groundwater encountered during drilling

SURFACE ELEVATION:

SOIL SYMBOL	DEPTH (FT)	SAMPLES	N: BLOWS/FT P: TONS/SQ FT T: BLOWS R: % RQD: %	MOISTURE CONTENT (%)	ATTERBERG LIMITS: LIQUID LIMIT (LL)	ATTERBERG LIMITS: PLASTIC LIMIT (PL)	ATTERBERG LIMITS: PLASTICITY INDEX (PI)	DRY DENSITY POUNDS/CU.FT	COMPRESSIVE STRENGTH (TONS/SQ. FT)	STRAIN AT FAILURE (%)	CONFINING PRESSURE (POUNDS/SQ IN)	MINUS NO. 200 SIEVE (%)	DESCRIPTION OF STRATUM
													6 in. Topsoil
			N = 9		NP	NP	NP						SILTY SAND (SM), brown, loose, dry to slightly moist, fine grained,
			N = 9	10.5								37	CLAYEY SAND (SC), reddish brown, loose to very dense, dry to slightly moist, fine grained,
	5		N = 6										
			N = 13	6.0								37	Transitions to orange brown, dry
			N = 15										
	10												Calcareous below 12 ft.
			N = 41										
	15												
			N = 84/9"										Transitions to weakly cemented
													Total Depth = 19.5 ft.

N - STANDARD PENETRATION TEST RESISTANCE
P - POCKET PENETROMETER RESISTANCE
T - TXDOT CONE PENETRATION RESISTANCE
R - ROCK CORE RECOVERY
RQD - ROCK QUALITY DESIGNATION

REMARKS:
GPS COORDINATES: Lat. 32.021887, Long. -102.184197

RENEWABLE LOG - MIDLAND - LOG A GNNL01.GDT - 4/5/19 17:18 - G:\GINT\PROJECTS\2019\BEYOND PROJECTS\GT1902007 - FIRE STATION 11\GT902007 - FIRE STATION 11.GPJ

LOG OF BORING B-3

BEYOND Engineering & Testing
Beyond Engineering and Testing, LLC
3011-B South County Road 1260
Midland, Texas 79706
Telephone: 432.561.5780
www.BeyondET.com

CLIENT: City of Midland
PROJECT: Fire Station 11
LOCATION: Midland, TX
NUMBER: GT1902007
DATE(S) DRILLED: 2/12/19

DRILLING METHOD(S):
Hollow Stem Auger

GROUNDWATER INFORMATION:
No groundwater encountered during drilling

SURFACE ELEVATION:

SOIL SYMBOL	DEPTH (FT)	SAMPLES	N: BLOWS/FT P: TONS/SQ FT T: BLOWS R: % RQD: %	MOISTURE CONTENT (%)	ATTERBERG LIMITS: LIQUID LIMIT (LL)	ATTERBERG LIMITS: PLASTIC LIMIT (PL)	ATTERBERG LIMITS: PLASTICITY INDEX (PI)	DRY DENSITY POUNDS/CU.FT	COMPRESSIVE STRENGTH (TONS/SQ. FT)	STRAIN AT FAILURE (%)	CONFINING PRESSURE (POUNDS/SQ IN)	MINUS NO. 200 SIEVE (%)	DESCRIPTION OF STRATUM
													2 in. Topsoil
			N = 4	5.5	19	12	7					27	SILTY, CLAYEY SAND (SC-SM), brown, loose, slightly moist, fine to medium grained,
			N = 13										CLAYEY SAND (SC), reddish brown, medium dense to very dense, dry, fine grained,
	5		N = 15	5.4								33	
			N = 28										Transitions to tan, calcareous
			N = 45										
	10												
			N = 52										
	15												Total Depth = 15 ft.

N - STANDARD PENETRATION TEST RESISTANCE
P - POCKET PENETROMETER RESISTANCE
T - TXDOT CONE PENETRATION RESISTANCE
R - ROCK CORE RECOVERY
RQD - ROCK QUALITY DESIGNATION

REMARKS:
GPS COORDINATES: Lat. 32.021989, Long. -102.184533
2 in. of topsoil was removed

RENEWABLE LOG - MIDLAND - LOG A GNNL01.GDT - 4/5/19 17:18 - G:\GINT\PROJECTS\2019\BEYOND PROJECTS\GT1902007 - FIRE STATION 11\GT902007 - FIRE STATION 11.GPJ

LOG OF BORING B-4

Beyond Engineering and Testing, LLC
3011-B South County Road 1260
Midland, Texas 79706
Telephone: 432.561.5780
www.BeyondET.com

CLIENT: City of Midland
PROJECT: Fire Station 11
LOCATION: Midland, TX
NUMBER: GT1902007
DATE(S) DRILLED: 2/13/19

DRILLING METHOD(S):
Hollow Stem Auger

GROUNDWATER INFORMATION:
No groundwater encountered during drilling

SURFACE ELEVATION:

SOIL SYMBOL	DEPTH (FT)	SAMPLES	FIELD DATA: N: BLOWS/FT P: TONS/SQ FT T: BLOWS R: % RQD: %	MOISTURE CONTENT (%)	ATTERBERG LIMITS: LIQUID LIMIT (LL)	ATTERBERG LIMITS: PLASTIC LIMIT (PL)	ATTERBERG LIMITS: PLASTICITY INDEX (PI)	DRY DENSITY POUNDS/CU.FT	COMPRESSIVE STRENGTH (TONS/SQ. FT)	STRAIN AT FAILURE (%)	CONFINING PRESSURE (POUNDS/SQ IN)	MINUS NO. 200 SIEVE (%)	DESCRIPTION OF STRATUM
													6 in. Topsoil
			N = 13										SILTY, CLAYEY SAND (SC-SM), brown, medium dense, dry to moist, fine grained,
			N = 13										CLAYEY SAND (SC), reddish brown, medium dense, dry, fine grained,
	5		N = 12										
													Total Depth = 5.5 ft.

N - STANDARD PENETRATION TEST RESISTANCE
P - POCKET PENETROMETER RESISTANCE
T - TXDOT CONE PENETRATION RESISTANCE
R - ROCK CORE RECOVERY
RQD - ROCK QUALITY DESIGNATION

REMARKS:
GPS COORDINATES: Lat. 32.022086, Long. -102.184139

RENEWABLE LOG - MIDLAND - LOG A GNNL01.GDT - 4/5/19 17:18 - G:\GINT\PROJECTS\2019\BEYOND PROJECTS\GT1902007 - FIRE STATION 11\GT902007 - FIRE STATION 11.GPJ

LOG OF BORING B-5

BEYOND Engineering & Testing
Beyond Engineering and Testing, LLC
3011-B South County Road 1260
Midland, Texas 79706
Telephone: 432.561.5780
www.BeyondET.com

CLIENT: City of Midland
PROJECT: Fire Station 11
LOCATION: Midland, TX
NUMBER: GT1902007
DATE(S) DRILLED: 2/13/19

DRILLING METHOD(S):
Hollow Stem Auger

GROUNDWATER INFORMATION:
No groundwater encountered during drilling

SURFACE ELEVATION:

SOIL SYMBOL	DEPTH (FT)	SAMPLES	N: BLOWS/FT P: TONS/SQ FT T: BLOWS R: % RQD: %	MOISTURE CONTENT (%)	ATTERBERG LIMITS: LIQUID LIMIT (LL)	ATTERBERG LIMITS: PLASTIC LIMIT (PL)	ATTERBERG LIMITS: PLASTICITY INDEX (PI)	DRY DENSITY POUNDS/CU.FT	COMPRESSIVE STRENGTH (TONS/SQ. FT)	STRAIN AT FAILURE (%)	CONFINING PRESSURE (POUNDS/SQ IN)	MINUS NO. 200 SIEVE (%)	DESCRIPTION OF STRATUM
			N = 5	6.3								25	SILTY, CLAYEY SAND (SC-SM), brown, loose, dry to moist, fine grained,
			N = 4										CLAYEY SAND (SC), reddish brown, loose, dry to moist, fine grained,
	5		N = 5										
													Total Depth = 5.5 ft.

N - STANDARD PENETRATION TEST RESISTANCE
P - POCKET PENETROMETER RESISTANCE
T - TXDOT CONE PENETRATION RESISTANCE
R - ROCK CORE RECOVERY
RQD - ROCK QUALITY DESIGNATION

REMARKS:
GPS COORDINATES: Lat. 32.022186, Long. -102.184497

RENEWABLE LOG - MIDLAND - LOG A GNNL01.GDT - 4/5/19 17:18 - G:\GINT\PROJECTS\2019\BEYOND PROJECTS\GT1902007 - FIRE STATION 11\GT1902007 - FIRE STATION 11.GPJ

LOG OF BORING B-6

Beyond Engineering and Testing, LLC
3011-B South County Road 1260
Midland, Texas 79706
Telephone: 432.561.5780
www.BeyondET.com

CLIENT: City of Midland
PROJECT: Fire Station 11
LOCATION: Midland, TX
NUMBER: GT1902007
DATE(S) DRILLED: 2/12/19

DRILLING METHOD(S):
Hollow Stem Auger

GROUNDWATER INFORMATION:
No groundwater encountered during drilling

SURFACE ELEVATION:

SOIL SYMBOL	DEPTH (FT)	SAMPLES	N: BLOWS/FT P: TONS/SQ FT T: BLOWS R: % RQD: %	MOISTURE CONTENT (%)	ATTERBERG LIMITS: LIQUID LIMIT (LL)	ATTERBERG LIMITS: PLASTIC LIMIT (PL)	ATTERBERG LIMITS: PLASTICITY INDEX (PI)	DRY DENSITY POUNDS/CU.FT	COMPRESSIVE STRENGTH (TONS/SQ. FT)	STRAIN AT FAILURE (%)	CONFINING PRESSURE (POUNDS/SQ IN)	MINUS NO. 200 SIEVE (%)	DESCRIPTION OF STRATUM
													2 in. Topsoil
			N = 5										SILTY, CLAYEY SAND (SC-SM), brown, loose, slightly moist, fine to medium grained,
			N = 5										CLAYEY SAND (SC), reddish brown, loose, dry, fine grained,
	5		N = 5		21	13	8						
													Total Depth = 5.5 ft.

N - STANDARD PENETRATION TEST RESISTANCE
P - POCKET PENETROMETER RESISTANCE
T - TXDOT CONE PENETRATION RESISTANCE
R - ROCK CORE RECOVERY
RQD - ROCK QUALITY DESIGNATION

REMARKS:
GPS COORDINATES: Lat. 32.021485, Long. -102.18403
2 in. of vegetation was removed bt backhoe

RENEWABLE LOG - MIDLAND - LOG A GNNL01.GDT - 4/5/19 17:18 - G:\GINT\PROJECTS\2019\BEYOND PROJECTS\GT1902007 - FIRE STATION 11\GT902007 - FIRE STATION 11.GPJ

LOG OF BORING B-7

Beyond Engineering and Testing, LLC
3011-B South County Road 1260
Midland, Texas 79706
Telephone: 432.561.5780
www.BeyondET.com

CLIENT: City of Midland
PROJECT: Fire Station 11
LOCATION: Midland, TX
NUMBER: GT1902007
DATE(S) DRILLED: 2/12/19

DRILLING METHOD(S):
Hollow Stem Auger

GROUNDWATER INFORMATION:
No groundwater encountered during drilling

SURFACE ELEVATION:

SOIL SYMBOL	DEPTH (FT)	SAMPLES	N: BLOWS/FT P: TONS/SQ FT T: BLOWS R: % RQD: %	MOISTURE CONTENT (%)	ATTERBERG LIMITS: LIQUID LIMIT (LL)	ATTERBERG LIMITS: PLASTIC LIMIT (PL)	ATTERBERG LIMITS: PLASTICITY INDEX (PI)	DRY DENSITY POUNDS/CU.FT	COMPRESSIVE STRENGTH (TONS/SQ. FT)	STRAIN AT FAILURE (%)	CONFINING PRESSURE (POUNDS/SQ IN)	MINUS NO. 200 SIEVE (%)	DESCRIPTION OF STRATUM
													2 in. Topsoil
			N = 2										SILTY SAND (SM), dark brown, very loose to loose, slightly moist, fine to medium grained,
			N = 4	12.2								37	
	5		N = 2										CLAYEY SAND (SC), reddish brown, very loose to loose, slightly moist, fine grained,
													Total Depth = 5.5 ft.

N - STANDARD PENETRATION TEST RESISTANCE
P - POCKET PENETROMETER RESISTANCE
T - TXDOT CONE PENETRATION RESISTANCE
R - ROCK CORE RECOVERY
RQD - ROCK QUALITY DESIGNATION

REMARKS:
GPS COORDINATES: Lat. 32.02131, Long. -102.184211
2 in. of vegetation was removed bt backhoe

RENEWABLE LOG - MIDLAND - LOG A GNNL01.GDT - 4/5/19 17:18 - G:\GINT\PROJECTS\2019\BEYOND PROJECTS\GT1902007 - FIRE STATION 11\GT902007 - FIRE STATION 11.GPJ

Certificate of Analysis Summary 615927

Beyond Engineering & Testing, Midland, TX

Project Name: Fire Station No 11

4.179

Project Id: GT1902007
Contact: Israel Juarez
Project Location:

Date Received in Lab: Wed Feb-27-19 11:41 am
Report Date: 05-MAR-19
Project Manager: Holly Taylor

Analysis Requested								
	Lab Id:	615927-001						
	Field Id:	B1/B2						
	Depth:	2-5.5 ft						
	Matrix:	SOIL						
	Sampled:	Feb-27-19 00:00						
Inorganic Anions by EPA 300/300.1	***Extracted:***	Mar-01-19 16:30						
	Analyzed:	Mar-02-19 03:03						
	Units/RL:	mg/kg	RL					
Chloride		<4.96	4.96					
Sulfate		<4.96	4.96					

This analytical report, and the entire data package it represents, has been made for your exclusive and confidential use.
The interpretations and results expressed throughout this analytical report represent the best judgment of XENCO Laboratories.
XENCO Laboratories assumes no responsibility and makes no warranty to the end use of the data hereby presented.
Our liability is limited to the amount invoiced for this work order unless otherwise agreed to in writing.

Houston - Dallas - Midland - Tampa - Phoenix - Lubbock - San Antonio - El Paso - Atlanta - New Mexico

Holly Taylor
Project Manager

DOCUMENT 00 31 50 - INDEPENDENT TESTING AGENCY APPROVALS

1.01 SUMMARY

A. The attached Independent Testing Agency approvals are included as an aid to the building permit-issuing authority to indicate substantiation of a particular design feature or element as having been tested for compliance with criteria and requirements contained in the locally prevailing model building code.

B. It shall be recognized that the attached copies of the approved assemblies are a reproduced copy only, and that the formal original versions are available from the issuing Agency.

C. The Independent Testing Agency Approvals bound herein are for the AHJ's and Construction Manager's convenience and information only and are not Contract Documents.

1.02 RESPONSIBILITY

A. Construction Manager is expected to examine the Independent Testing Agency Approvals and the proposed Contract Documents to become thoroughly familiar with the proper execution of the assemblies to be implemented on this Project, so that the designated assemblies will achieve acceptance by the Authorities Having Jurisdiction.

1.03 PRODUCT SCHEDULE

A. Independent Testing Agency Approvals for the following specified products / assemblies from the listed manufacturers are hereby furnished for review and consideration by the Authorities Having Jurisdiction as an aid to securing the building construction permit for the Project:

UL Assembly	Building Component
D925	Floor- Ceiling Assembly
N782	Beam Assembly
P936	Roof- Ceiling Assembly
S735	Beam Assembly
U411	Wall & Partition
U415	Wall & Partition
U417	Wall & Partition
U420	Wall & Partition

U436	Wall & Partition
U438	Wall & Partition
U465	Wall & Partition
U469	Wall & Partition
U904	Wall & Partition
U905	Wall & Partition
X510	Columns
X771	Columns
X772	Columns
C-AJ-0012	Floor-Ceiling Assembly
C-AJ-0055	Floor-Ceiling Assembly
C-AJ-0070	Floor-Ceiling Assembly
C-AJ-0102	Floor-Ceiling Assembly
C-AJ-1184	Floor-Ceiling Assembly
C-AJ-1235	Floor-Ceiling Assembly
C-AJ-1277	Floor-Ceiling Assembly
C-AJ-1291	Floor-Ceiling Assembly
C-AJ-1382	Floor-Ceiling Assembly
C-AJ-1403	Floor-Ceiling Assembly
C-AJ-1406	Floor-Ceiling Assembly
C-AJ-2109	Floor-Ceiling Assembly
C-AJ-2171	Floor-Ceiling Assembly
C-AJ-2210	Floor-Ceiling Assembly
C-AJ-2212	Floor-Ceiling Assembly
C-AJ-3095	Floor-Ceiling Assembly
C-AJ-3185	Floor-Ceiling Assembly
C-AJ-3199	Floor-Ceiling Assembly
C-AJ-4035	Floor-Ceiling Assembly
C-AJ-4054	Floor-Ceiling Assembly
C-AJ-5091	Floor-Ceiling Assembly
C-AJ-5222	Floor-Ceiling Assembly
C-AJ-6006	Floor-Ceiling Assembly
C-AJ-6012	Floor-Ceiling Assembly

C-AJ-6013	Floor-Ceiling Assembly
C-AJ-6017	Floor-Ceiling Assembly
C-AJ-6027	Floor-Ceiling Assembly
C-AJ-7021	Floor-Ceiling Assembly
C-AJ-7040	Floor-Ceiling Assembly
C-AJ-7046	Floor-Ceiling Assembly
C-AJ-7051	Floor-Ceiling Assembly
C-AJ-7067	Floor-Ceiling Assembly
C-AJ-7075	Floor-Ceiling Assembly
C-AJ-7082	Floor-Ceiling Assembly
C-AJ-8042	Floor-Ceiling Assembly
C-AJ-8056	Floor-Ceiling Assembly
C-AJ-8096	Floor-Ceiling Assembly
C-AJ-8101	Floor-Ceiling Assembly
C-AJ-8133	Floor-Ceiling Assembly
C-BJ-4023	Floor-Ceiling Assembly
F-A-1016	Floor-Ceiling Assembly
F-A-1017	Floor-Ceiling Assembly
F-A-2053	Floor-Ceiling Assembly
F-A-2054	Floor-Ceiling Assembly
F-C-1009	Floor-Ceiling Assembly
F-C-1020	Floor-Ceiling Assembly
F-C-3012	Floor-Ceiling Assembly
F-C-3018	Floor-Ceiling Assembly
F-C-3060	Floor-Ceiling Assembly
G204	Floor-Ceiling Assembly
W-J-8007	Wall & Partition
W-L-1054	Wall & Partition
W-L-1152	Wall & Partition
W-L-1207	Wall & Partition
W-L-1249	Wall & Partition
W-L-2078	Wall & Partition
W-L-2128	Wall & Partition

W-L-2167	Wall & Partition
W-L-2170	Wall & Partition
W-L-2185	Wall & Partition
W-L-2259	Wall & Partition
W-L-3065	Wall & Partition
W-L-3112	Wall & Partition
W-L-3179	Wall & Partition
W-L-4025	Wall & Partition
W-L-4030	Wall & Partition
W-L-4034	Wall & Partition
W-L-5029	Wall & Partition
W-L-5171	Wall & Partition
W-L-8007	Wall & Partition
W-L-8014	Wall & Partition

B. 1. UL = Underwriters Laboratories, Inc

END OF SECTION 00 31 50

DOCUMENT 00 72 13 - GENERAL CONDITIONS

1.01 GENERAL CONDITIONS OF THE CONTRACT

A. The General Conditions of the Contract for this Project are stated in the following form, which is not incorporated herein.

1. AIA Document, A201, 2017 Edition, GENERAL CONDITIONS OF THE CONTRACT FOR CONSTRUCTION

1.02 SUPPLEMENTARY CONDITIONS

A. Certain articles of the General Conditions are revised or replaced by requirements of the Supplementary Conditions; see Document 00 73 00. Such revisions or replacements shall take precedence over the General Conditions. All provisions not specifically modified by Supplementary Conditions shall remain in effect.

END OF DOCUMENT 00 72 13

DOCUMENT 00 73 43 - PREVAILING WAGE RATES

1.00 Pay no less than the wages stated in the Owner's schedule of *Prevailing Wage Rates*, bound herein immediately following this Document. No claims for additional compensation will be considered because of payments of wage rates in excess of applicable rates contained therein. If prevailing rates listed are thought to be inaccurate, report suspected discrepancies to the Architect and the Owner.

1.01 Applicable Statutes: Texas Government Code, Sections 2258.021-.026, 2258.051-.058.

A. A contractor or subcontractor which violates this act shall forfeit as a penalty to the Owner the statutory penalty of sixty dollars ($60.00) per worker for each day or portion of a day said worker is paid less than the applicable stipulated rate for any work done under this Contract.

B. The Contractor and each subcontractor shall keep, or cause to be kept, an accurate record showing the names and occupations of all workers employed in connection with the Work, and showing also the number of hours actually worked per day, the actual hourly rate, and the actual per diem wages paid to each of such workers, which record shall be open at all reasonable hours to the inspection of the Owner.

C. Contractor and each subcontractor shall each complete wage rate surveys on copies of three-page forms available from the Owner and submit to Owner no later than the submittal of the second application for payment.

1.02 Prevailing wages shall not be construed to prohibit the payment of more than the rates stated. Under no condition shall any worker employed on this job be paid less than the applicable minimum prevailing wage.

1.03 Comply with all applicable laws, including but not limited to laws concerned with labor, equal employment opportunity, health and safety, and minimum wages.

1.04 Apprentice Pay: Only apprentices enrolled in an approved program may be paid apprenticeship rates. Minimum rates for apprentices in all trades and crafts shall be the rates determined by approved apprenticeship programs, or $1.00 per hour less than journeyman's rates, whichever are lower. Approved apprenticeship programs are those approved by the U.S. Department of Labor, Bureau of Apprenticeship Training.

1.05 Calculation of Rates:

A. Base Per Diem Rate: Multiply hours worked per day by base hourly rate.

B. Overtime (over 40 hours per week, and holidays): multiply base hourly rate by one and one-half (1.5).

1.06 Prevailing Wage Rate Determination Information: Reference 00 21 13 Instruction to Bidders/Bid Forms..

END OF DOCUMENT 00 73 43

SECTION 01 11 00 - SUMMARY OF WORK

PART 1 - GENERAL

1.01 THE WORK

A. The Work of this Contract ("the Work"): Two New Fire Stations

B. Major items of work: The Work of this Contract includes *(but is NOT limited to)* the following:

1. Earthwork, landscaping;
2. Concrete foundations, slabs, paving;
3. Concrete masonry walls, partitions and masonry veneer;
4. Miscellaneous carpentry and architectural woodwork;
5. Roofing and insulation,
6. Hollow metal work; plastic finished wood doors; finish hardware; glazing;
7. Porcelain tile, lay-in ceilings, and painting;
8. Toilet accessories, fire extinguishers, and signage;
9. Plumbing, heating, ventilation and air conditioning.
10. Electrical work.
11. Structural components, columns, beams, supports, etc.
12. Demolition Work

1.02 WORK BY OTHERS

A. The Owner reserves the right to engage other entities to perform certain items of work related to the project.

B. Owner-Furnished Items: Refer to the Drawings and to various Sections of these Specifications for information regarding items (if any) that are to be furnished by Owner but installed by the Contractor, and items to be furnished by Owner and installed by Owner's personnel.

1.03 COORDINATION

A. Coordination with other contractors: Coordinate operations and share the site with other contractors (if any) as necessary for successful completion of the Project. Coordinate all requirements for access, scheduling, phasing and relationships between the work of various contracts and trades as necessary to ensure proper installation, alignment, connection, adjustment, cleaning and protection of all work of the Project.

1. Communicate with Owner's personnel and Owner's other contractors as necessary to adequately coordinate operations of the various contractors.

2. During Work, allow access by other contractor(s) invited by the Owner to bid or negotiate other work, as necessary for examination of site conditions and work in progress.

PART 2 - PRODUCTS (Not Used)

PART 3 - EXECUTION (Not Used)

END OF SECTION 01 11 00

SECTION 01 16 00 – PRODUCT REQUIREMENTS

PART 1 GENERAL

1.01 QUALITY ASSURANCE

A. Compatibility: When given the option of selecting between two or more products for use on the Project, the product selected shall be compatible with products previously selected, even if previously selected products were also options.

1.02 PRODUCT DELIVERY, STORAGE AND HANDLING

A. Deliver, store and handle products in accordance with the manufacturer's recommendations, using means and methods to prevent damage, deterioration and loss, including theft.

1. Schedule delivery to minimize storage at the site and to prevent overcrowding of construction spaces.
2. Coordinate delivery with installation to ensure minimum holding time for items that are flammable, hazardous, easily damaged or sensitive to deterioration, theft and other losses.
3. Deliver products to the site in the manufacturer's original sealed containers or other packaging system, complete with labels and instructions for handling, storing, unpacking, protecting and installing.
4. Inspect products upon delivery to ensure compliance with the Contract Documents, and to ensure that products are undamaged and properly protected.
5. Store products at the site in a manner that will facilitate inspection and measurement of quantity or counting of units.
6. Store heavy materials in a manner that will not endanger supporting construction.
7. Store products subject to damage by the elements above ground, under cover in a weathertight enclosure, with ventilation adequate to prevent condensation. Maintain temperature and humidity within range required by manufacturer's instructions.

PART 2 PRODUCTS

2.01 PRODUCT SELECTION

A. General Requirements: Provide products complying with the Contract Documents, that are undamaged and, unless otherwise indicated, unused at the time of installation.

1. Provide products complete with all accessories, trim, finish and other items needed for a complete installation and for the intended use and effect.
2. Standard Products: Where available, provide standard products of types that have been produced and used successfully in similar situations on other projects.

B. Product Selection Procedures:

1. Proprietary Specification Requirements: Where only a single product or manufacturer is named, provide the product indicated; no substitutions permitted.
2. Semi-proprietary Specification Requirements: Where two or more products or manufacturers are named, provide one of the products indicated; no substitutions will be permitted. Where

products or manufacturers are specified by name, accompanied by the term "or equal", or a similar term, submit evidence as specified below under Substitutions.

3. Non-Proprietary Specifications: When Specifications list products or manufacturers that are available and may be incorporated in the Work, but do not restrict the Contractor to use of these products only, the Contractor may propose any available product that complies with Contract requirements. Comply with Substitutions requirements below to obtain approval for use of an unnamed product.
4. Descriptive Specification Requirements: Where specifications describe a product or assembly, listing exact characteristics required, with or without use of a brand or trade name, provide a product or assembly that provides the characteristics and otherwise complies with Contract requirements.
5. Performance Specification Requirements: Where Specifications require compliance with performance requirements, provide products that comply with these requirements, and are recommended by the manufacturer for the application indicated. General overall performance is implied where the product is specified for a specific application. Manufacturer's recommendations may be in published literature or by the manufacturer's certification of performance.
6. Codes and Standards: Where the Specifications only require compliance with an imposed code, standard or regulation, select a product that complies with the standards, code or regulations specified.
7. Visual Matching: Where Specifications require matching an established Sample, Architect's decision on whether match is satisfactory will be final.
8. Visual Selection: Where specified requirements include the phrase "as selected from manufacturer's standard colors and patterns" or similar clause, select products and manufacturers complying with other specified requirements. The Architect will select the color, pattern and texture from the product line selected.
9. Substitutions: Substitutions will only be considered when specified materials are no longer available, no longer meet code requirements, or equivalent materials will save the Owner a significant amount of money.

C. Substitutions: For proposed substitutions, submit evidence for review by Architect, who shall be the sole judges of equivalency, that such products are equivalent in every significant way to those specified; indicate cost savings. Bear responsibility for all costs incurred in coordinating and modifying other work to accommodate substitutions.

PART 3 EXECUTION

3.01 INSTALLATION

A. Comply with manufacturer's instructions and recommendations for installation of products in the applications indicated. Anchor each product securely in place, accurately located and aligned with other Work.

3.02 CLEANING

A. Clean exposed surfaces and protect as necessary to ensure freedom from damage and deterioration at time of Substantial Completion.

END OF SECTION 01 16 00

SECTION 01 21 00 - ALLOWANCES

PART 1 GENERAL

1.01 SUMMARY

A. ALLOWANCES: Except as otherwise stated, allowance amounts below are for the purchase, installation, materials and labor. No Contractor mark-ups allowed on Allowance items. Include mark-up, if any, in Base Proposal.

B. UNIT PRICES: Unless otherwise stated, unit prices below include execution and all other related costs.

C. Work included in Allowances and Unit Prices may be separately purchased by Owner or contracted separately by Owner and assigned to Contractor as a subcontract.

PART 2 PRODUCTS (Not applicable to this Section)

PART 3 EXECUTION

3.01 LUMP SUM ALLOWANCES Base Bid

A.	Owner's Unforeseen Contingency:	$ 100,000
B.	Materials Testing:	$ 70,000
C.	Site Miscellaneous:	$ 75,000
	Total Allowances:	$ 245,000.00

3.02 CONTINGENT UNIT PRICES

A. ADDITIONAL SELECT FILL: select fill material required in excess of the quantity indicated by the Contract
Documents, per cubic yard.

B. INCREASED FOOTING DEPTH: Increase in the length of footings required due to soil conditions at the site, per cubic yard of concrete.

C. DECREASED FOOTING DEPTH: Decrease in the length of footings required due to soil conditions at the site, per cubic yard of concrete including excavation, reinforcing etc.

D. CONCRETE PAVING: Increase in area concrete paved areas, per cubic yard.

E. CONCRETE FLATWORK: Increase in area concrete sidewalk areas, per cubic yard.

F. SOIL STABILIZATION: Increase in quantity of soil stabilization, per cubic yard.

END OF SECTION 01 21 00

DOCUMENT 01 22 00 - UNIT PRICES

PART 1 – GENERAL

1.01 SUMMARY

A. This Section includes administrative and procedural requirements for unit prices.

1.02 DEFINITIONS

A. Unit price is stated as a price per unit of measurement for materials or services added to or deducted from the Contract Sum by appropriate modification, if estimated quantities of Work required by the Contract Documents are increased or decreased.

1.03 PROCEDURES

A. The Unit Price shall include the furnishing by the Contractor of all labor, tools, materials, machinery, appliances, plant and equipment appurtenant to and necessary for, the construction in every detail and the completion of all work to which the Unit Price pertains.

B. Unit Price shall also include all profit, overhead expenses, bond, insurance, patent fees, royalties, risk due to the elements, delay, profit, injuries, damages, claims, and all other items not specifically mentioned that may be required to construct fully each item of the Work, complete in place.

C. No other charges or mark-ups will be allowed to be applied to the Unit Price when the appropriate Contract Document modification is written.

D. Measurement and Payment: Refer to individual Specification Sections for work that requires establishment of unit prices. Methods of measurement and payment for unit prices are specified in those Sections.

E. Owner reserves the right to reject Contractor's measurement of work-in-place that involves use of established unit prices and to have this work measured, at Owner's expense, by an independent surveyor acceptable to Contractor.

F. List of Unit Prices: A list of unit prices is included at the end of this Section. Specification Sections referenced in the schedule contain requirements for materials described under each unit price.

PART 2 – PRODUCTS (Not Used)

PART 3 – EXECUTION

3.01 GENERAL

A. Refer to individual Sections of Specifications for the definitions of units of work where the establishment of unit prices is required; the methods of measurement and pricing are specified therein.

B. It is recognized that the Owner- Contractor Agreement records acceptance or rejection of each Unit Price, either as bid or as otherwise agreed upon by the date of the Agreement.

C. Utilization of Unit Prices shall be solely by means of Change Orders as specified in the General and Supplementary Conditions.

D. Each Unit Price shall be the total cost or credit to the Owner.

E. Unit Prices stated shall apply to both additive and deductive variations in quantities.

F. Unit Prices shall remain in effect until date of Final Completion of the entire Work.

3.02 IMPLEMENTATION

A. The initial listing of unit prices to be quoted with bids is included at the end of this Section as "Unit Price Schedule."

B. Materials and methods for units of work covered by Unit Prices shall be in accordance with applicable product Specifications included in the Project Manual.

3.03 LIST OF UNIT PRICES

A. ADDITIONAL SELECT FILL: Select fill material required in excess of the quantity indicated by the Contract Documents, per cubic yard.

B. INCREASED FOOTING DEPTH: Increase in the length of footings required due to soil conditions at the site, per lineal foot of pier depth. Pricing to include all related costs for concrete, reinforcing, excavation, etc.

C. DECREASED FOOTING DEPTH: Decrease in the length of footings required due to soil conditions at the site, per lineal foot of pier depth. Pricing to include all related costs for concrete, reinforcing, excavation, etc.

D. ADDITIONAL 5" CONCRETE PAVING: Increase area of 5" concrete paving, per square foot of concrete. Pricing to include all related costs for concrete, reinforcing, excavation, etc.

E. ADDITIONAL 6" CONCRETE PAVING: Increase area of 6" concrete paving, per square foot of concrete. Pricing to include all related costs for concrete, reinforcing, excavation, etc.

F. ADDITIONAL 7" CONCRETE PAVING: Increase area of 7" concrete paving, per square foot of concrete. Pricing to include all related costs for concrete, reinforcing, excavation, etc.

G. ADDITIONAL CONCRETE FLATWORK: Increase area of concrete sidewalks, per square foot of concrete. Pricing to include all related costs for concrete, reinforcing, excavation, etc.

H. ADDITIONAL SOIL STABILIZATION: Stabilization required in excess of the quantity indicated by the contract documents, per square yard.

END OF DOCUMENT 01 22 00

SECTION 01 25 13 - PRODUCT SUBSTITUTION PROCEDURES

PART 1 GENERAL

1.01 SUMMARY

A. Section Includes: Administrative and procedural requirements for handling requests for substitutions made after award of the Contract.

1.02 DEFINITIONS

A. Definitions used in this Article are not intended to change or modify the meaning of other terms used in the Contract Documents.

B. Substitutions: Requests for changes in products, materials, equipment, and methods of construction required by Contract Documents proposed by the Contractor after award of the Contract are considered requests for "substitutions". Substitutions for specified items will not be considered during the Bid Period. The following are not considered substitutions:

1. Changes made by the Owner, the Architect or their consultants by Addenda, which are considered to be part of the Work of the Construction Contract.
2. Revisions to Contract Documents requested by the Owner or Architect.
3. Specified options of products and methods included in Contract Documents.
4. The Contractor's determination of and compliance with governing regulations and orders issued by governing authorities.

1.03 SUBMITTALS

A. Substitution Requests Submittal: Requests for substitution will be considered if received within 10 working days after commencement of the Work. Requests received more than 10 working days after commencement of the Work may be considered or rejected at the discretion of the Owner and/or Architect.

1. Submit 3 copies of each request for substitution for consideration. Submit requests in the form and in accordance with procedures required for Change Order proposals.

2. Identify the product, or the fabrication or installation method to be replaced in each request. Include related Specification Section and Drawing numbers. Provide complete documentation showing compliance with the requirements for substitutions, and the following information, as appropriate:

a. Product Data, including Drawings and descriptions of products, fabrication and installation procedures.
b. Samples, where applicable or requested.
c. A detailed comparison of significant qualities of the proposed substitution with those of the Work specified. Significant qualities may include elements such as size, weight, durability, performance and visual effect.
d. Coordination information, including a list of changes or modifications to other parts of the Work, and to construction performed by the Owner and Separate Contractors, that will become necessary to accommodate the proposed substitution.

e. A statement indicating the substitution's effect on the Construction Schedule compared to the schedule without approval of the substitution. Indicate the effect of the proposed substitution on overall Contract Time.
f. Cost information, including any proposed net change in Contract Sum.
g. Certification by the Contractor that the proposed substitution is in every significant respect equal to or better than that required by the Contract Documents, and that it will perform adequately in the application indicated. Include the Contractor's waiver of rights to additional payment or time, that may subsequently become necessary because of the failure of the substitution to perform adequately.

3. Action: Within one week of receipt of the request for substitution, the Architect will request additional information or documentation necessary for evaluation of the request. Within 2 weeks of receipt of the request, or one week of receipt of the additional information or documentation, whichever is later, the Architect will notify the Contractor of acceptance or rejection of the proposed substitution. If a decision on use of a proposed substitute cannot be made or obtained within the time allocated, use the specified product. Acceptance will be in the form of a Change Order, or, if not change in the Contract Sum or Contract Time, a Field Order or Change Bulletin.

PART 2 - PRODUCTS

2.01 SUBSTITUTIONS

A. Conditions: The Contractor's substitution request will be received and considered by the Architect when one or more of the following conditions are satisfied, as determined by the Architect; otherwise requests will be returned without action except to record noncompliance with these requirements.

1. Extensive revisions to Contract Documents are not required.
2. Proposed changes are in keeping with the general intent of Contract Documents.
3. The request is timely, fully documented and properly submitted.
4. The request is directly related to an "or equal" clause or similar language in the Contract Documents.
5. The specified product or method of construction cannot be provided within the Contract Time. The request will not be considered if the product or method cannot be provided as a result of failure to pursue the Work promptly or coordinate activities properly.
6. The specified product or method of construction cannot receive necessary approval by a governing authority, and the requested substitution can be approved.
7. A substantial advantage is offered the Owner, in terms of cost, time, energy conservation or other considerations of merit, after deducting offsetting responsibilities the Owner may be required to bear. Additional responsibilities for the Owner may include additional compensation to the Architect for redesign and evaluation services, increased cost of other construction by the Owner or separate Contractors, and similar considerations.
8. The specified product or method of construction cannot be provided in a manner that is compatible with other materials, and Contractor certifies that the substitution will overcome the incompatibility.
9. The specified product or method of construction cannot be coordinated with other materials, and where the Contractor certifies that the proposed substitution can be coordinated.

10. The specified product or method of construction cannot provide a warranty required by the Contract Documents and where the Contractor certifies that the proposed substitution will provide the required warranty.

B. The contractor's submittal and the Architect's acceptance of Shop Drawings, Product Data or Samplesthat relate to construction activities not complying with the Contract Documents does not constitute an acceptable or valid request for substitution, nor does it constitute approval.

PART 3 - EXECUTION (Not Used)

END OF SECTION 01 25 13

SUBSTITUTION REQUEST

PROJECT: CITY OF MIDLAND SUBSTITUTION No.:
Fire Stations No. 5 & 11

DATE:

TO: Martinez Architects, LP From:
900 Rockmead, Suite 250
Houston, Texas 77339

Copies:

☐ Owner ☐ Architect ☐ Consultant

Specification Section:

Drawing Reference: Detail(s):

Proposed Substitution:

Manufacturer:

Trade Name:

Manufacturer Contact Information: Address

Phone Number

Installer Contact Information: Address

Phone Number

Product History: ☐ New Product ☐ 2-5 yrs. ☐ 5-10 yrs. ☐ 10+ yrs.

Similar Installation(s):

Project: Architect:

Address: Owner:

Date Installed:

Substitution affect other areas: ☐ No ☐ Yes; Explain

Product Differences:

Reason for Request:

Savings to Owner for Accepting Substitution: ☐ No ☐ Yes $

Change to Contract Time for Accepting Substitution: ☐ No ☐ Yes $

Additional Information / Attachments:

☐ Drawings ☐ Product Data ☐ Samples ☐ Tests ☐ Reports ☐ Other

Request By: Date:

SECTION 01 26 00 – CONTRACT MODIFICATION PROCEDURES

PART 1 - GENERAL

1.01 SUMMARY

A. Submit proposals for changes to the Work when required. Prepare documents in a form acceptable to the Owner.

B. Make changes in the Work as described in approved documents signed by the Owner.

C. Make other changes in the Work as described in Change Proposal Requests, Change Bulletins and/or Field Orders issued by the Architect, when such changes do not involve a change in the Contract Sum or Contract Time.

D. Related Requirements: Methods of determining the amount of Change Orders are set forth in the Construction Contract.

1.03 DEFINITIONS

A. Change Order: A document signed by the Owner authorizing a change in the Work, in the Contract Sum, in the Contract Time, or any combination thereof.

B. Change Bulletin or Field Order: A document issued by the Architect that clarifies or changes the Work in a minor way and may or may not require a change in the Contract Sum or Contract Time. A description of the action expected of the Contractor will be a part of each Bulletin or Field Order.

C. Change Proposal Request or Clarification: A document issued by the Architect that clarifies or changes the work in a minor way that does not require a change in the Contract Sum or Contract Time. A description of the action expected of the Contractor will be a part of each Change Proposal Request or Clarification.

D. Allowance Expenditure Authorization: A document signed by the Architect, Owner, and Contractor authorizing a Change Proposal Request to be funded by Allowance, and does not affect the Contract Sum, the Contract Time, or any combination thereof.

PART 2 - NOT USED

PART 3 - EXECUTION

3.01 CHANGES INITIATED BY THE OWNER

A. If the Owner contemplates making a change in the Work that will affect the Contract Sum or Contract Time, the Owner will initiate the issuance of a Change Bulletin by the Architect including or accompanied by a description of the action required by the proposed change.

1. If the action described requires a proposal from the Contractor, the Contractor shall submit such proposal within 10 working days.

2. The Owner will review and respond to the Contractor's proposal within 10 working days after its receipt.

B. If the description requires Contractor to proceed with work that will be submitted in the future as a Change Order, Contractor shall expeditiously proceed with the Work described in the Bulletin and submit documentation for inclusion in a Change Order once Work covered by the Bulletin is completed or as soon as final cost/time is determined.

C. If the Owner contemplates making a change in the Work that will not affect the Contract Sum or Contract Time using Allowance funds, the Owner will initiate the issuance of a Change Proposal Request by the Architect including or accompanied by a description of the action required by the proposed change. The Contractor will then price said change for the Owner and Architect's review. Once all parties agree to proposed pricing, the Architect shall issue a Allowance Expenditure Authorization.

3.02 CHANGES INITIATED BY THE CONTRACTOR

A. Should the Contractor discover a discrepancy in the Contract Documents not previously noted or determine on receipt of a Change Bulletin or Field Order that the work described therein will necessitate a change, Contractor shall notify the Architect and Owner in writing within 5 working days of such discovery or determination, and of the intent to submit a Change Order or Change Proposal Request for the work involved.

B. Within 10 working days of such notice, the Contractor shall submit a Change Order or Change Proposal Request to the Owner and Architect. Request shall state:

1. Proposed change in Contract Sum and/or Contract Time if required.
2. Description of other changes in the Work required by the proposed change, or desirable therewith, if any.
3. Substantiation of costs or time involved as described below.

3.03 COORDINATION

A. Promptly revise Schedule of Values and Application for Payment forms to record each authorized Change Order as a separate line item and adjust the Contract Sum as shown in the Change Order.

B. Promptly revise Progress Schedule to reflect any change in Contract Time, revise schedules to adjust times for other items of work affected by the change and resubmit.

3.04 DISPUTES

A. If the Contractor and/or Owner disagree about the value of the proposed change in the Contract Sum or Contract Time, the one shall notify the other in writing, stating the reason for the disagreement.

1. A disagreement about the value of a Change Order does not relieve the Contractor of responsibility to proceed with the change as ordered and to seek settlement of the dispute under the pertinent provisions of the Contract Documents.

3.05 WORK ON CHANGES

A. Work on proposed changes that affect the Contract Sum shall not be started until an approved Change Order has been received by the Contractor, unless otherwise directed by the Owner in writing.

B. In all cases, the Contractor shall maintain an accurate account of all labor and materials involved in the change.

END OF SECTION 01 26 00

SECTION 01 26 13- REQUESTS FOR INTERPRETATION

PART 1 – GENERAL

1.01 SUMMARY

A. This Section includes administrative provisions for submitting and processing Requests for Interpretation (RFIs) after execution of the Agreement:

1.02 DEFINITIONS

A. RFI: Request from Contractor seeking interpretation or clarification of the Contract Documents.

1.03 REVIEW OF CONTRACT DOCUMENTS AND FIELD CONDITIONS

A. General: Carefully study and compare Contract Documents with existing conditions at Project site and shall at once report in writing to Architect any error, inconsistency or omission discovered or any materials, systems, procedures, or methods of construction, either shown on the Drawings or specified, which the Contractor feels are incorrect, inadequate, obsolete, or unsuitable for purpose intended.

B. Before starting each portion of the Work, carefully study and compare the various Drawings and other Contract Documents related to that portion of the Work, and information furnished by the Owner, take field measurements of existing conditions related to that portion of the Work, and observe conditions at the site.

C. Any errors, discrepancies, inconsistencies, or omissions discovered shall be promptly reported to the Architect as a request for interpretation.

D.

1. Contractor shall not proceed with the Work without written clarification from the Architect.

E. In the case of conflicts or discrepancies between Drawings and Specifications, or within either Document not clarified by Addendum, promptly submit written request to the Architect as a request for interpretation.

F.

1. Contractor shall not proceed with the Work without written clarification from the Architect.

G. Contractor shall request clarification in sufficient time to avoid delays and increases in the Contract Sum.

H. Contractor’s failure to report discrepancies or omissions in the Contract Documents, or Contractor- or Subcontractor-generated assumptions, in lieu of Architect-issued clarifications regarding the intent of the Contract Documents, shall not be used a basis for future claims once the apparent discrepancies or omissions have been reconciled by appropriate interpretation issued by the Architect.

1.04 REQUESTS FOR INTERPRETATION (RFIs)

A. Procedure: Immediately on discovery of the need for interpretation of the Contract Documents, and if not possible to request interpretation at Project meeting, prepare and submit an RFI in the form specified.

1. RFIs shall originate with Contractor. RFIs submitted by entities other than Contractor will be returned with no response.
2. Coordinate and submit RFIs in a prompt manner so as to avoid delays in Contractor's work or work of subcontractors.

B. Content of the RFI: Include a detailed, legible description of item needing interpretation and the following:

1. Project name.
2. Date.
3. Name of Contractor.
4. Name of Architect.
5. RFI number, numbered sequentially.
6. Specification Section number and title and related paragraphs, as appropriate.
7. Drawing number and detail references, as appropriate.
8. Field dimensions and conditions, as appropriate.
9. Contractor's suggested solution(s). If Contractor's solution(s) impact the Contract Time or the Contract Sum, Contractor shall state impact in the RFI.
10. Contractor's signature.
11. Attachments: Include drawings, descriptions, measurements, photos, Product Data, Shop Drawings, and other information necessary to fully describe items needing interpretation.
    a. Supplementary drawings prepared by Contractor shall include dimensions, thicknesses, structural grid references, and details of affected materials, assemblies, and attachments.

C. Hard-Copy RFIs: included at the end of this Section.

1. Identify each page of attachments with the RFI number and sequential page number.

D. Software-Generated RFIs: General Contractor shall request a copy of the file from the Architect.

E.

1. Electronic files shall be submitted in Adobe Acrobat PDF format.

F. Architect's Action: Architect will review each RFI, determine action required, and return it. Allow three working days for Architect's response for each RFI. RFIs received after 1:00 p.m. will be considered as received the following working day. If more time or more information is needed, the RFI should be returned by the Architect within the 3-day period, stating such.

1. The following RFIs will be returned without action:
    a. Requests for approval of submittals.
    b. Requests for approval of substitutions.
    c. Requests for coordination information already indicated in the Contract Documents.
    d. Requests for adjustments in the Contract Time or the Contract Sum.
    e. Requests for interpretation of Architect's actions on submittals.
    f. Incomplete RFIs or RFIs with numerous errors.

2. Architect's action may include a request for additional information, in which case Architect's time for response will start again.
3. Architect's action on RFIs that may result in a change to the Contract Time or the Contract Sum may be eligible for Contractor to submit Change Proposal according to Section 01 26 13, Contract Modification Procedures.
4. If Contractor believes the RFI response warrants change in the Contract Time or the Contract Sum, notify Architect in writing within 10 days of receipt of the RFI response.
5. RFIs involving request for remedial action to correct nonconforming work, which are returned in more than fourteen working days, are not eligible for Contractor's request for an increase in Contract Sum or an extension of Contract Time.
6. Where any action or response falls due on a Saturday, Sunday, or legal holiday, such action or response shall be considered due on the next business day which is not a Saturday, Sunday or a legal holiday.

G. On receipt of Architect's action, update the RFI log and immediately distribute the RFI response to affected parties. Review response and notify Architect within ten days if Contractor disagrees with response.

H. RFI Log: Prepare, maintain, and submit a tabular log of RFIs organized by the RFI number. Submit updated log at each Construction Progress Meeting. Provide software log with not less than the following:

1. Project name.
2. Name and address of Contractor.
3. Name and address of Architect.
4. RFI number including RFIs that were dropped and not submitted.
5. RFI description.
6. Date the RFI was submitted.
7. Date Architect's response was received.
8. Identification of related Minor Change in the Work, Construction Change Directive, and Proposal Request, as appropriate.

PART 2 - PRODUCTS (Not Used)

PART 3 - EXECUTION

3.01 ATTACHMENTS

A. Request for Interpretation.

END OF SECTION 01 26 13

REQUEST FOR INTERPRETATION

PROJECT: CITY OF MIDLAND RFI No.:
Fire Stations No. 5 & 11

DATE:

TO: Martinez Architects, LP From:
900 Rockmead, Suite 250
Houston, Texas 77339

Copies:

☐ Owner
☐ Architect
☐ Consultant

Specification Section: Paragraph: Drawing Reference: Detail:

Request:

Request By: Date:

Response:

Response By: Date:

Additional Information / Attachments:

☐ Samples ☐ Sketches

SECTION 01 29 00 – PAYMENT PROCEDURES

PART 1 - GENERAL

1.01 RELATED REQUIREMENTS: See CONSTRUCTION SCHEDULES for scheduling documents required to be submitted with each Request for Payment.

1.02 TYPICAL PAYMENT REQUESTS

A. On the last day of each calendar month, submit to the Architect a Request for Payment covering work through the end of that month:

1. Form: AIA Documents G702, Application and Certificate for Payment; G703, Continuation Sheet.
2. Complete every entry on the form. Incomplete forms will be returned without action. Entries must match current Schedule of Values data. Subcontractor requisition values must be true and accurate.
3. Sign and notarize the Request for Payment.
4. Provide four 8 x 11 color photographs taken from 4 corners of the site each month. Include photographs with each monthly Application for Payment.
5. Submit notarized Release of Lien for each previous month’s Application for Payment.

1.03 APPROVAL PROCEDURES

A. In taking action on the Contractor's Request for Payment, the Architect shall rely on the accuracy and completeness of the information furnished by the Contractor and shall not be deemed to represent that he has made audits of the supporting data.

B. Payment will not be made for materials and equipment stored off the site, except at the Owner's discretion and prior approval. When Request for Payment includes material or equipment stored off-site, the Request shall be accompanied with a statement certifying:

1. Description of item.
2. Location of bonded warehouse.
3. Affidavit of Storage.
4. Certificate of Insurance.
5. Bill of Sale made to Owner stating there will be no additional cost for transportation and delivery.
6. Statement certifying that item or any part thereof will not be installed in any construction other than Work under this Contract.

C. Materials stored on-site must be identified and listed in stored materials column.

1.04 INITIAL PAYMENT REQUEST

A. Submit a Schedule of Values at the Pre-construction Conference.

B. Provide at the Pre-construction Conference:

1. Listing of Subcontractors and principal manufacturers, suppliers and fabricators.
2. Progress Schedule.
3. Schedule of Submittals.
4. Listing of Contractor's staff assignments and principal consultants.
5. Copies of acquired building permits and similar authorizations and licenses from governing authorities for current performance of the Work.
6. Evidence satisfactory to Owner that Contractor's insurance coverages have been secured.
7. Data needed to acquire Owner's insurance coverages.

1.05 FINAL REQUEST FOR PAYMENT

A. Before submitting request for final payment, perform final cleaning of the Work and forward to the Owner the bonds, written warranties required for particular items of Work and other documentation as follows:

1. Properly executed releases or waivers of lien. Submit in duplicate prior to final payment. If the Contractor cannot furnish a waiver of liens or releases satisfactory to the Owner, the Owner may require a surety bond as a condition precedent to final payment.
2. Properly executed AIA Document G707, Consent of Surety to Final Payment, 1994 Edition.
3. Occupancy permits and similar approvals or certifications by governing authorities.
4. Testing/adjusting/balancing records, maintenance instructions, meter readings, start up performance reports, and similar changeover information germane to Owner's occupancy, use, operation, and maintenance of completed Work.
5. Advice to Owner on coordination of shifting insurance coverages, including proof of extended coverages as required.
6. Completion of project closeout requirements.
7. Completion of items specified for completion beyond time of Substantial Completion.
8. Transmittal of required construction records to Owner.
9. Proof, satisfactory to Owner, that taxes, fees and similar obligations of Contractor have been paid.
10. Removal of temporary facilities, services, surplus materials, rubbish etc.
11. Change over of locks and other Contractor access provisions to Owner's property.

PART 2 - PRODUCTS (Not applicable to this Section)

PART 3 - EXECUTION (Not applicable to this Section)

END OF SECTION 01 29 00

SECTION 01 31 00 – PROJECT MANAGEMENT AND COORDINATION

PART 1 - GENERAL

1.01 SUMMARY

A. Section Includes: Administrative and supervisory requirements necessary for Project coordination including, but not necessarily limited to coordination, administrative and supervisory personnel, general installation provisions, cleaning and protection.

1.03 COORDINATION

A. Coordination: Coordinate construction activities included under various Sections of these Specifications to assure efficient and orderly installation of each part of the Work. Coordinate construction operations included under different Sections of the Specifications that are dependent upon each other for proper installation, connection, and operation.

1. Where installation of one part of the Work is dependent on installation of other components, either before or after its own installation, schedule construction activities in the sequence required to obtain the best results.
2. Where availability of space is limited, coordinate installation of different components and systems to assure maximum accessibility for required maintenance, service and repair.
3. Make adequate provisions to accommodate items scheduled for later installation.
4. Where necessary, prepare memoranda for distribution to each party involved outlining special procedures required for coordination. Include such items as required notices, reports, and attendance at meetings.
5. Prepare similar memoranda for the Owner and separate contractors, if any, when coordination of their Work is required.

B. Administrative Procedures: Coordinate scheduling and timing of required administrative procedures with other construction activities to avoid conflicts and ensure orderly progress of the Work. Such administrative activities include, but are not limited to, the following:

1. Preparation of schedules.
2. Delivery and processing of submittals.
3. Progress meetings.
4. Project Closeout activities.

C. Conservation: Coordinate construction activities to ensure that operations are carried out with consideration given to conservation of energy, water, and materials.

1.04 SUBMITTALS

A. Staff Names: Within 10 days of Notice to Proceed, submit a list of the Contractor's principal staff assignments, including the Superintendent and other personnel in attendance at the site; identify individuals, their duties and responsibilities; list their addresses and telephone numbers.

1. Post copies of the list in the temporary field office, and at each temporary telephone.

PART 2 - PRODUCTS (Not Used)

PART 3 - EXECUTION

3.01 GENERAL INSTALLATION PROVISIONS

A. Inspection of Conditions: Require the Installer of each major component to inspect both the substrate and conditions under which Work is to be performed. Do not proceed until unsatisfactory conditions have been corrected in an acceptable manner.

B. Manufacturer's Instructions: Comply with manufacturer's installation instructions and recommendations, to the extent that those instructions and recommendations are more explicit or stringent than requirements contained in Contract Documents.

C. Inspect materials or equipment immediately upon delivery and again prior to installation. Reject damaged and defective items.

D. Provide attachment and connection devices and methods necessary for securing Work. Secure Work correctly positioned, aligned and true as intended by the Contract Documents, whether plumb, level, straight, sloped or curved. Allow for expansion and building movement.

E. Visual Effects: Provide uniform joint width in exposed Work. Arrange joints in exposed Work to obtain the best visual effect. Refer questionable choices to the Architect for final decision.

F. Re-check measurements and dimensions before starting each installation.

G. Install each component during conditions and Project status that will ensure the best possible results. Isolate each part of the completed construction from incompatible materials as necessary to prevent deterioration.

H. Coordinate temporary enclosure with required inspections and tests, to minimize the necessity of uncovering completed construction for that purpose.

I. Mounting Heights: Where mounting heights are not indicated, install individual components at standard mounting heights recognized within the industry for the particular application indicated. Refer questionable mounting height decisions to the Architect for final decision.

3.02 CLEANING AND PROTECTION

A. During handling and installation, clean and protect construction in progress and adjoining materials in place. Apply protective covering where required to ensure protection from damage or deterioration at Substantial Completion.

B. Clean and maintain completed construction as frequently as necessary through the remainder of the construction period. Adjust and lubricate operable components to ensure operability without damaging effects.

END OF SECTION 01 31 00

SECTION 01 31 06 - COORDINATION DRAWINGS

PART 1 – GENERAL

1.01 SUMMARY

A. This Section includes administrative provisions for providing Coordination Drawings.

1.02 DESCRIPTION

A. Coordination Drawings: Reproducible overlay drawings showing work with horizontal and vertical dimensions to avoid interference with structural framing, ceilings, partitions, equipment, conveying systems, fire suppression systems, plumbing systems, mechanical systems, electrical systems, lighting, fire alarm systems, telecommunications systems, electronic safety and security systems, and other services. Provide coordination drawings for work in the following:

1. Under slabs-on-grade.
2. In crawl spaces.
3. In and above ceilings.
4. In soffits and furr-downs.
5. Within walls.
6. Within chases.
7. In mechanical spaces.
8. In electrical spaces.

1.03 PROVISION AND USE OF ELECTRONIC FILES

A. General: Electronic CAD files of the Contract Drawings will be furnished by Architect for Contractor's use in preparing Coordination Drawings and Layout Drawings.

B. Release of electronic drawing files are conditional upon the following:

1. The drawings represented in the CAD files are not Contract Documents.
2. Files generally available for transfer will be limited to an impediments file as described in the Agreement.
3. Only one set of electronic drawing files will be furnished; Contractor assumes responsibility for distributing pertinent files to the various subcontractors.
4. The electronic drawing files have been developed without the assistance or specific expertise of the individual subcontractors and installers, and therefore do not account for or incorporate means, methods, shop standards, and routing economies required by individual subcontractors for the scope of work required by the finished Work.
5. Modifications to the information and routings of the selected components shown on the electronic drawing files may be required and are the responsibility of the Contractor. All modifications are part of the scope of Work of this Project and shall be provided at no additional cost to Owner.
6. Contractor and subcontractors agree that electronic drawing files are not fit for any particular purpose, including, but not limited to quantity take-offs, pricing, development of a building information model (BIM), clash detection, construction sequencing, or the manufacture of any building component or system.

7. There are no assurances that the electronic drawing files will be usable by the Contractor's and subcontractors' systems, infrastructure, or software; and that the files may be subject to anomalies, errors, viruses, malware, or other unintended defects.

C. Limitations of Electronic Drawing File Transfer Agreement:

1. Agreement Form applies to Architectural Drawings only. If Contractor desires electronic drawing files for Drawings prepared by one of Architect's consultants, Contractor may contact consultant directly to obtain such files.
2. Contractor shall recognize that various consultants retained by the Architect for this Project, or retained separately by the Owner, may have agreements that differ from that included in Appendix A, and may have differing costs and procedures involved with obtaining electronic drawing files.
3. Architect makes no assertion that the Architect's or Owner's consultants will furnish electronic files of their Drawings. Additionally, not all Drawings may be available electronically.

1.04 INFORMATIONAL SUBMITTALS

A. General: Submit in accordance with Section 01 31 00, Project Management and Coordination.

B. Project Information:

1. Contractor's stamped, approved Coordination Drawings.
   a. Letter indicating one copy of approved Coordination Drawings available at project site.
   b. One copy of approved coordination Drawings delivered to Architect for information and file.

C. Architect's Action: Refer to Section 01 33 00, Submittal Procedures, for informational submittals.

1.05 QUALITY ASSURANCE

A. Prior to Start of Work: Require written approval of Coordination Drawings from each subcontractor whose work is contained within the scope of, or is affected by, the Work for which the Coordination Drawings have been prepared.

B. Coordination Meetings: Schedule with affected trades and subcontractors. Refer to Section 01 31 00, Project Management and Coordination.

1.06 PRECEDENCE OF SERVICES FOR COORDINATION

A. In event of conflicts involving location and layout of work; use following priority to resolve disputes:

1. Structure and partitions have highest priority.
2. Equipment location and access.
3. Ceiling system and recessed light fixtures.
4. Gravity drainage lines.
5. High pressure ductwork and devices.

6. Large pipe mains, valves, and devices.
7. Pneumatic tube and material conveying systems.
8. Low pressure ductwork, diffusers, registers, grilles, HVAC equipment.
9. Fire protection piping, devices, and heads.
10. Small piping, tubing, electrical conduit, and devices.
11. Sleeves through rated partitions.
12. Access panels.
13. Service Clearances.

PART 2 – PRODUCTS (Not Used)

PART 3 – EXECUTION

3.01 PRODUCTION OF COORDINATION DRAWINGS

A. Provide minimum 1/4 inch scale plan, elevation and section drawings, showing:

1. Partitions.
2. Ceiling heights.
3. Structural framing locations and elevations.
4. Column lines.
5. Other impediments and interferences with installation of the Work.
6. Locations of the various services and systems, horizontally dimensioned from column center lines, and vertically dimensioned from top of floor slab elevations.
7. All mechanical, electrical, plumbing and fire service components and systems including ductwork, piping, conduit, and fixtures.

B. Produce combined coordination layout drawing plans and sections that fully integrate the various fire suppression systems, plumbing systems, and HVAC systems.

1. Systems shall be uniquely color-coded for ease of identification.

C. Prepare Coordination Drawings for coordination of installation of products and materials fabricated by separate entities.

1. Indicate relationship of components shown on separate Shop Drawings.
2. Indicate required installation sequences.
3. Refer to Divisions 21 through 28 for specific Coordination Drawing requirements for facility services installations.

D. Resolve major interferences at initial coordination meeting prior to production of drawings.

E. Produce initial coordination drawings within time-frame required to manufacturer and install equipment and products to meet the Substantial Completion date.

F. Meet as required to resolve interferences and correct drawings.

3.02 PRODUCTION OF LAYOUT DRAWINGS

A. Provide scale plan and elevation drawings. Plans shall be prepared at a scale of 1/4-inch per foot.

B. Indicate areas where access panels are required to gain access to serviceable and maintenance items.

3.03 APPROVAL

A. After written approval of Coordination Drawings and Layout Drawings by each affected subcontractor, determine method used to resolve interferences not previously identified.

B. Give written approval of acceptable changes to Coordination Drawings and Layout Drawings prior to start of work in affected area.

C. Maintain one copy of current approved Coordination Drawings and Layout Drawings on Project Site.

3.04 ADJUSTING

A. At no additional cost to the Owner, make modifications required as a result of failure to resolve interference, provide correct Coordination Drawings and Layout Drawings, or call attention to changes required in other work as a result of modifications.

END OF SECTION 01 31 06

DATE: _____

NAME: _____

COMPANY: _____

ADDRESS: _____

_____

PROJECT: _____

ELECTRONIC DRAWING FILE TRANSFER AGREEMENT FORM

At the *Contractor's* request, Architect, will provide electronic files for the *Contractor's* convenience and use in the preparation of shop drawings related to the above-referenced Project, subject to the following terms and conditions:

Architect makes no representation as to the compatibility of these files with the *Contractor's* hardware or software.

The electronic files are not Contract Documents. The undersigned *Contractor* acknowledges that the true and accurate record of the design is the most recent issued printed hard copy of the design, not the requested electronic data. In the event that a conflict arises between the *Architect's* signed and sealed hard-copy Contract Documents and the electronic files, the signed and sealed hard-copy Contract Document shall govern. *The Contractor* is responsible for determining if any conflict exists. **The undersigned *Contractor* agrees to hold harmless and indemnify Architect and Architect's consultants from and against all claims, liabilities, losses, damages and costs, including but not limited to attorney's fees, arising out of or in any way connected with the modification, misinterpretation, misuse or reuse by others of the electronic information provided by Architect.**

Data contained on these electronic files are part of the Architect's instruments of service and shall not be used by *the Contractor* or anyone else receiving these data through or from *the Contractor* for any purpose other than as a convenience in the preparation of shop drawings for the above-referenced Project. The use of these drawing files does not relieve *the Contractor* of any of the requirements or responsibilities for checking and coordination of the Work as described in the Contract Documents. When modified for project-related services, *the Contractor* shall add *Contractor's* company name, address, telephone number and contact information to the title block of each sheet. Because of the potential that the information presented on the electronic files can be modified, unintentionally or otherwise, Architect reserves the right to remove all indicia of ownership and/or involvement from each electronic display.

Architect will furnish the undersigned *Contractor* electronic files of the following Drawing sheets: (*Contractor to list drawings here*)

_____

_____

The electronic information will include only an impediments file (walls, doors, windows, millwork, columns, column grid and grid identifiers, room names, room numbers, drawing name and drawing scale). Legal disclaimers will be added to the files when required by state licensing authorities.

Under no circumstances shall delivery of the electronic files for use by the undersigned *Contractor* be deemed a sale by Architect, and Architect makes no warranties, either express or implied, of merchantability and fitness for any particular purpose. In no event shall Martinez Architects, LP be liable for any loss of profit or any consequential damages as a result of the *Contractor's* use or reuse of these electronic files.

All reports, plans, specifications, computer files, field data, notes and other documents and instruments prepared by the *Architect* as instruments of service shall remain the property of the *Architect*. The *Architect* shall retain all common law, statutory and other reserved rights, including the copyright thereto.

ACKNOWLEDGED AND ACCEPTED:
(The Contractor)

ARCHITECT
(The Architect)

_____
Printed Name

_____
Signature

_____
Title

_____
Date

_____
Company

_____
Printed Name of Recipient

_____
Signature of Recipient

_____
Title

_____
Date

END OF AGREEMENT

SECTION 01 31 19 - PROJECT MEETINGS

PART 1 - GENERAL

1.01 SUMMARY

A. Section Includes: Scheduling and holding or pre-construction, progress and pre-installation meetings throughout the progress of the Work to review the construction schedule, address pending problems, coordinate the work of various trades, and to allow Architect and Owner's representative to ascertain whether the Work is consistent with the Contract Documents.

1.02 QUALITY ASSURANCE

A. Persons designated by the Contractor to attend and participate in project meetings shall have all required authority to commit the Contractor to solutions as agreed upon in the project meetings.

1.03 SUBMITTALS

A. Duties of Contractor's Project Manager or representative who schedules, prepares for and administers project meetings:

1. Prepare agenda.
2. Distribute written notice and agenda of Regular and Called Meetings seven (7) days in advance of meeting date.
3. Make physical arrangements for meeting.
4. Preside at meetings.
5. Record minutes: Include significant proceedings and decisions.
6. Distribute copies of minutes to participants, within four (4) days after meetings.
7. Furnish one (1) copy of the meeting minutes to Architect.
8. Furnish one (1) copy of minutes to Project Manager.
9. Furnish one (1) copy of minutes to Owner's Representative.

PART 2 - PRODUCTS (Not Used)

PART 3 - EXECUTION

3.01 PRE-CONSTRUCTION MEETING

A. A pre-construction meeting will be held prior to commencement of the Work at a place and time to be announced by the Architect and/or Owner.

B. Agenda: Project coordination, administrative procedures, scheduling and other related subjects.

3.02 PROJECT PROGRESS MEETINGS

A. Coordinate with the Architect and Owner's Representative as required to establish a mutually acceptable schedule for regular project progress meetings.

B. Attendance:
1. Contractor's Contract Manager or his representative.

a. Project Manager
b. Project Superintendent
2. Owner's Representative.
3. Architect and Architect's consultants, if desired by Owner.
4. Subcontractors as pertinent to agenda.
5. Safety Representative (as required).

C. Minimum agenda:

1. Approval of minutes of previous meetings.
2. Review of Work progress.
3. Field observations, problems, and decisions.
4. Identification of problems which impede planned progress.
5. Review of submittal schedule and status of submittals.
6. Review of offsite fabrication and delivery schedules.
7. Maintenance of progress schedule.
8. Corrective measures to regain projected schedules.
9. Planned progress during succeeding work period.
10. Coordination of projected progress.
11. Maintenance of quality and work standards.
12. Effect of proposed changes on progress schedule and coordination.
13. Other business relating to Work.

3.03 PRE-INSTALLATION MEETINGS

A. Where specified herein or when deemed appropriate by the Contractor, hold pre-installation meetings with members of the relevant trades involved to discuss installation of any one specific building product, element, material or system.

B. As a minimum hold pre-installation meetings for following trades and system installation:
a. Site Clearing
b. Earthwork
c. Soil Stabilization
d. Site Utilities
e. Building and Site Concrete
f. Roughing-in of Plumbing and Electrical System below Building Slab
g. Installation of Masonry
h. Erection of Metal Building System
i. Installation of Glazing and Glazed Systems
j. Installation of Lath and Plaster
k. Installation of Gypsum Wallboard
l. Installation of Ceramic Tile
m. Installation of Acoustical Ceiling and Wall Panels
n. Installation of Resilient Flooring
o. Installation of Carpet
p. Painting and Staining
q. Roughing-in of MEP System above Ceiling

3.04 ATTENDANCE AT MEETINGS

A. To the maximum extent practicable, assign the same person or persons to represent the Contractor and Subcontractors at project meetings throughout the construction period.

END OF SECTION 01 31 19

SECTION 01 32 16 - CONSTRUCTION PROGRESS SCHEDULE

PART 1 - GENERAL

1.01 SUMMARY: Provide bar-chart Progress Schedule, Schedule of Values and Submittal Schedule; Project Directory; update as specified.

1.02 SUBMITTALS

A. Progress Schedule: Submit at Pre-construction Conference; schedule will establish interim completion dates for the various activities under the Contract.

B. Schedule of Values: Submit at Pre-construction Conference.

C. Submit actual Progress Schedule monthly along with each Request for Payment. Include any revisions to schedule due to executed Change Orders.

D. Submittal Schedule: Submit at Pre-construction Conference; will be used by the Architect to allocate time for review. Expeditious review of unscheduled submittals may not be possible; delays resulting will be the responsibility of the Contractor.

1.03 COORDINATION

A. Coordinate the naming and sequencing of activities for consistency between submitted reports or lists.

1. Update at monthly or shorter time intervals to maintain coordination and correlation between separate reports.
2. Distribution each updated report to entities involved in the Work including Architect and Owner.
3. In particular, coordinate Progress Schedule, Schedule of Values, listing of subcontractors, Submittal Schedule, progress reports, and payment requests.

1.05 QUALITY ASSURANCE

A. Architect's Reliance upon Schedules: The Architect will rely upon revised schedules submitted with the Request for Payment as a basis for approving payments.

PART 2 - PRODUCTS (Not applicable to this Section)

PART 3 - EXECUTION

3.01 PROGRESS SCHEDULE

A. Prepare in the form of a bar chart with a separate horizontal bar for each trade or operation, and a horizontal time scale. Show the order and interdependence of all activities necessary to complete the Work. Include:

1. Project mobilization.
2. Submission and approval of submittals.

3. Procurement of equipment and critical materials.
4. Special fabrication, products and installation.
5. Decision dates for selection of finishes and products specified by allowance or specified to be selected during the Sample review process.
6. Final inspecting, testing and instruction.

B. Arrange schedule to show how sequence of Work is affected by requirements for phased completion, coordination with existing work, partial occupancy prior to Substantial Completion, site restrictions, provisions for future work and similar requirements of Project.

C. Give Owner and Architect one week notice of anticipated significant revisions to the Progress Schedule.

D. Post 24"x36" original progress schedule in job trailer throughout construction.

3.02 SUBMITTAL SCHEDULE

A. Prepare a separate chronological schedule of submittals including the following:

1. Anticipated date of Architect's receipt of submittal.
2. Required date of Architect's return of submittal.
3. Specification sections to which submittal relates.
4. Subcontractor/supplier responsible for preparation.
5. Provide blank columns for actual date of submittal, resubmittal, and final disposition by Architect.

B. Give Architect two week notice of any anticipated significant revisions to approved Submittal Schedule. Allow approximately three weeks for the Architect's review; however, this may vary depending on the quantity of the material submitted.

C. Correlate Submittal Schedule with listing of principal Subcontractors, as required by the General Conditions.

3.03 SCHEDULE OF VALUES

A. Prepare Schedule of Values, as required by General Conditions, in coordination with the preparation of the Progress Schedule. Provide breakdown of Contract Sum in sufficient detail to facilitate continued evaluation of payment requests and progress reports.

B. Break down principal subcontract amounts into separate labor and material items. Round off to nearest whole dollar, but with total equal to Contract Sum. Breakdown of Schedule of Values amounts must be true and accurate.

C. Where Work is separated into phases which require separately phased payments to Contractors, provide sub-schedules or values correlated with each phase.

D. Unit Cost Allowance: Show line item value as product of unit cost multiplied by the measured quantity as estimated from best indication in Contract Documents.

E. Margins of Cost: Show line items of indirect costs and margins on actual costs only to extent such items will be individually listed in payment requests. In general, establish each item in

Schedule of Values (and in payment requests) to be completed with its total expenses and proportionate share of general overhead and profit margin.

3.04 PROJECT DIRECTORY

A. Prepare, submit and update whenever necessary a Project Directory listing all entities involved in the Project with the names of their representative(s), addresses, telephone and fax numbers, and after hours/emergency telephone numbers. Submit copies to Owner, Architect and Architect's consultants.

END OF SECTION 01 32 16

SECTION 01 32 23 – SURVEY AND LAYOUT DATA

PART 1 GENERAL

1.1 QUALITY CONTROL

A. Conform to State of Texas laws for surveys requiring licensed surveyors. Employ a surveyor acceptable to Owner's Representative if required by the Contract.

1.2 SUBMITTALS

A. Conform to requirements of Division 1.

B. Submit name, address, and telephone number of Surveyor to Owner's Representative before starting survey work.

C. Submit documentation verifying accuracy of survey work on request.

D. Submit certificate signed by Surveyor, that elevations and locations of the Work are in conformance with the Contract.

1.3 PROJECT RECORD DOCUMENTS

A. Maintain a complete and accurate log of control and survey work as it progresses.

B. Prepare a certified survey setting forth dimensions, locations, angles, and elevations of construction and site work upon completion of foundation walls and major site improvements.

C. Submit record documents under provisions of Division 1.

1.4 EXAMINATION

A. Verify locations of survey control points prior to starting the Work.

B. Notify Owner's Representative immediately if any discrepancies are discovered.

1.5 SURVEY REFERENCE POINTS

A. The Owner will establish survey control datum as indicated on Drawings. Inform Owner's Representative in advance of time additional horizontal and vertical control points will be established so verification deemed necessary by Owner's Representative may be done with minimum inconvenience to the Owner or Contractor.

B. Locate and protect survey control points prior to starting site work; preserve permanent reference points during construction.

C. Notify Owner's Representative a minimum of 48 hours before relocation of reference points is needed due to changes in grades or other reasons.

D. Promptly report loss or destruction of reference points to Owner's Representative.

E. Reimburse the Owner for cost of reestablishment of permanent reference points disturbed by construction operations.

1.6 SURVEY REQUIREMENTS

A. Utilize recognized engineering survey practices.

B. Establish a minimum of two permanent benchmarks on site, referenced to established control points. Record horizontal and vertical location data on Project record documents.

C. Establish elevations, lines and levels to provide quantities required for measurement and payment and for appropriate controls for the Work. Locate and lay out the following with appropriate instruments:
1. Site improvements including grading, fill and topsoil placement, utilities, and footings and slabs.
2. Grid or axis for structures.
3. Building foundation, column locations, and ground floor elevations.

D. Periodically verify layouts.

1.7 AS-BUILT SURVEY REQUIREMENTS

A. Detention Ponds:
1. If a detention pond is included in scope of work, Contractor shall provide Owner and Engineer an As-Built survey of said detention pond for volume verification prior to seeding/sodding or covering pond. Contractor shall provide two hard copies and one AutoCAD file with points.
2. For open ponds, survey shall include enough information for Engineer to perform volume verification calculations. Items shall include but not be limited to: top of bank delineation and elevations, toe of slope delineation and elevations, pilot channels (or center swale) and elevations, and inflow/outflow structures. Survey grid shall be 50' maximum. Survey shall extend a minimum of 20' outside top of bank of pond.
3. For below grade (underground) ponds, survey shall include but not be limited to: layout of below grade structure including pipe sizes, box culvert sizes, etc. and flowlines of structure.
4. As-Built survey shall be signed and sealed by a registered Land Surveyor.

B. Outfalls to Harris County Flood Control (HCFC) Channels:
1. HCFC requires an As-Built Certificate for all newly constructed outfalls to their facilities. The Contractor shall provide Owner and Engineer an As-Built Certificate of any newly constructed outfalls to HCFC facilities. The As-Built survey shall include but is not limited to: detailed sketch of outfall, flowline of outfall, size and pipe type of outfall and flowline of existing channel. Survey shall include area of at least 20' around outfall.

2. As-Built survey shall be signed and sealed by a registered Land Surveyor.

C. Sites located in the 100-year Floodplain:
1. Sites located in the 100-year Floodplain will require an As-Built Certificate. Contractor shall provide Owner and Engineer an As-Built Survey (2 hard copies) of completed site for use in filling out said As-Built Certificate. Survey shall include but is not limited to: finished floor elevation(s) of all slabs (including recessed interior slabs, raised interior slabs and bottom of elevator pits), paving elevations, outside mechanical equipment elevations (A/C units, chillers, compressors, etc.) and all fill placed within 100-year floodplain. Survey shall include entire site.
2. Contractor shall coordinate with Engineer for exact Governmental requirements prior to survey.
3. As-Built survey shall be signed and sealed by a registered Land Surveyor.

PART 2 – NOT USED

PART 3 – NOT USED

END OF SECTION 01 32 23

SECTION 01 33 00 – SUBMITTAL PROCEDURES

PART 1 - GENERAL

1.01 RESPONSIBILITY: Submit only through the Contractor, who shall deliver submittals to the office of the Architect or Engineer. Bear and prepay all reproduction, packaging, handling, postage and delivery costs for submittals.

1.02 USE: Maintain at Project site an orderly file of all reviewed submittals for reference during regular working hours by Owner, Architect and their representatives. Use only submittals marked "No Exception Taken" or "Exceptions Noted" by the Architect for construction.

PART 2 - PRODUCTS (Not applicable to this Section)

PART 3 - EXECUTION

3.01 SUBMITTAL PROCEDURES

A. Before submittal to Architect, review submittals for conformance to Contract Documents. Apply Contractor's approval stamp and information as specified below.

B. Shop Drawings: Prepare and submit to the Architect reproducible copies of each sheet. Architect will review and return to the Contractor; Contractor shall print and distribute one copy each for the Owner and the Architect, plus one copy each for the Contractor's field office and, where necessary, for appropriate engineers and other consultants.

C. Product Data: Submit descriptive literature, brochures, test reports, schedules, installation instructions, warranties and other standard printed Product Data, and certification letters. Submit five or more copies of each, one to be retained by the Owner, one to be retained by the Architect and one to be retained by the Architect's consultant, if appropriate. The two or more remaining copies will be returned to the Contractor. Contractor's copies may be xerographic copies.

D. Samples: Unless additional samples or sets of samples are requested by Architect, submit in duplicate. Include information, review and approval required for submittals on accompanying letter of transmittal, and where practicable identify samples fully on labels placed on the back or in an inconspicuous location, including at least the Project name and Architect's Project number, sample source, submittal number and applicable specification section number.

E. Resubmittals: Submit in the same form and number of copies as first submittal. Note previous submittal's date and submission number for this item of work on resubmittals.

F. Allow fifteen working days for processing and review of any one submittal. Each review period shall begin on date of receipt of submittal by the Architect and extend to date of mailing or transmission to Contractor.

G. Copies of Contract Drawing are not acceptable as Shop Drawings, unless authorized in writing by the Architect.

H. Furnish all additional copies of final Shop Drawings and Product Data required by authorities having jurisdiction, by Subcontractors and suppliers for coordination of work, and by other contractors whose work is related.

I. Coordinate submittals into logical grouping to facilitate interrelation of associated items.

3.02 SHOP DRAWINGS, PRODUCT DATA & SAMPLES - INFORMATION REQUIRED

A. Illustrate fully requirements of the Contract Documents, and identify products, materials and equipment. Show methods of support and assembly, dimensions, joints, connections and all other data required for fabrication, coordination and installation. Clearly indicate the relationship to adjoining work, indicating, where appropriate, field measured dimensions.

B. Permanently label each submittal with the following:

1. Name of Project.
2. Name of Contractor.
3. Name of Subcontractor, Manufacturer or Supplier.
4. Number and title of relevant Section, drawing or detail.
5. Drawing number and detail references.
6. Locations products are to be installed, as appropriate.
7. Where printed materials describe more than one product or model, clearly identify the item to be furnished.
8. Show previous applicable changes made in the Project by Change Orders and other instructions or remarks.

C. Attach a transmittal, stating the following information:

1. Contractor's name and signature of representative.
2. Project name.
3. List of submittal titles and number of copies.
4. Date of submission.
5. Submission number. Number transmittals consecutively.
6. Specification Division of submittal.

D. In addition to the information required in B and C above, resubmitted Shop Drawings and Product Data shall bear the date and notation of revision in the title block and shall indicate extent of revision clearly "bubbled" or "clouded".

E. Note substitutions or deviations from contract requirements in a conspicuous manner.

F. Do not make changes on reproducibles returned to the Contractor with Architect's stamp applied.

G. Submit Product Data prior to or with material samples.

3.03 CONTRACTOR'S REVIEW OF SHOP DRAWINGS AND PRODUCT DATA

A. Prepare a stamp for Contractor's review of submittals which bears the Contractor's name and the following information:

[CONTRACTOR'S NAME]

[PROJECT NAME] ***[ARCHITECT'S PROJECT #]***

This Submittal:
( ) Conforms to Contract Documents
( ) Conforms to Contract Documents as noted
( ) Deviates from Contract requirements; substitutions noted

Supplier or
Subcontractor: _____

Contractor
Review by: _____ Submittal #: _____

Spec. **Date** **Return**
Sect. #: _____ **Submitted: _____** **By: _____**

B. **Architect will not review submittals not bearing this stamp and signatures evidencing Contractor's review/coordination.**

C. Prior to each submittal, carefully review and coordinate all aspects of each item being submitted and verify that each item and its submittal conforms in all respects to the Contract requirements. By stamping, marking and signing each submittal, Contractor certifies that this coordination has been performed.

3.04 ARCHITECT'S REVIEW PROCEDURES

A. Review by the Architect shall not be construed as a complete check, but only that the general method of construction and detailing is satisfactory. Review shall not relive the Contractor from responsibility for errors.

B. "No Exception Taken" and "Exceptions Noted" notations authorize the Contractor to proceed with fabrication, purchase, or both, of the items so noted, subject to the revisions, if any, required by Architect's review comments.

C. If change of a substantial nature is necessary in the submittal, or a portion of the submittal is unacceptable, but fabrication on the remaining portions of products shown in the submittal can proceed in accordance with the corrections noted by the Architect, the submittal may be returned to the Contractor bearing the stamp of the Architect: "Revise and Resubmit". The Contractor may proceed with fabrication on all acceptable portions of the submittal in accordance with corrections noted by the Architect. The Contractor shall correct and resubmit the part of the submittal in question. The Architect will indicate which portion of the submittal is unacceptable.

D. If a submittal is returned to the Contractor with the Architect's stamp marked "Submit specified item", purchase and/or fabrication of the work shown cannot proceed. Correct the submittal and resubmit.

E. The Architect's review of submittals shall not be construed as authorizing any change in the Contract Sum or Contract Time unless so stated in a separate Bulletin, nor shall it be construed

as relieving the Contractor of responsibility for coordination of Work with other trades, or interpreted as approval of quantities and dimensions.

F. Architect's review shall not relieve the Contractor from responsibility for furnishing Work required by the Contract Documents that may have been omitted on the shop drawings. Architect's review of a separate item shall not indicate review of the complete assembly in which it functions.

G. Contractor shall make corrections in submittals required by Architect and resubmit until released for fabrication. Show each drawing revision by number, date and subject in a revision block on the drawing. Make only those revisions directed or approved by the Architect, clearly indicating them as required above.

H. If Contractor considers any revision a change, he shall so notify Architect; see MODIFICATION PROCEDURES.

I. When submittals have been reviewed by the Architect, resubmittal for substitution will not be considered unless accompanied by an explanation acceptable to the Architect of why the substitution is considered necessary.

J. Resubmittals of previously approved shop drawings will not be reviewed.

3.05 SAMPLES

A. Unless colors and patterns are specifically identified in the Contract Documents, whenever a choice of color or pattern is available, submit accurate color and pattern charts or samples to the Architect for selection.

1. Where Contract Documents specifically schedule or otherwise indicate particular colors or patterns, submit the sample in the colors or patterns so required.
2. Where custom colors are specified without being identified, submit proposed color for approval.

B. Submit full range of manufacturer's standard finishes except when more restrictive requirements are specified, indicating colors, textures and patterns for Architect's selection and approval by Owner's representative.

C. Reviewed samples which may be used in the Work are indicated in the individual Specification sections.

D. Label each sample with identification required for transmittal letters.

E. Where possible, provide samples that are physically identical with the proposed material or product to be incorporated in the work.

F. Mockups: Provide full-size sample installations where directed by Architect; re-work, re-install or otherwise correct until acceptable to Architect. Accepted mock-ups shall serve as a standard for judging the quality of the workmanship in the finished Work. Maintain mock-ups until all such work is accepted; remove upon Project completion.

3.06 CERTIFICATES OF COMPLIANCE

A. When required, submit notarized certification that all materials used in the Work comply with all specified provisions thereof. Certification shall not be construed as relieving the Contractor from furnishing satisfactory materials if, after tests are performed on selected sample, the material is found not to meet specified requirements.

END OF SECTION 01 33 00

SECTION 01 35 16 - ALTERATION PROJECT PROCEDURES

PART 1 – GENERAL

1.01 SUMMARY

A. This Section includes:

1. Products and installation for patching and extending Work within construction areas of existing facilities, site amenities and Owner temporary.
2. Providing transition and adjustments.
3. Repair of damaged surfaces and finishes

B. Related Sections include the following:

1. Section 01 50 00, Temporary Facilities and Controls,
2. Section 02 41 91, Selective Structural Demolition

1.02 OCCUPANCY, ACCESS, AND PROTECTION

A. Normal business hours for facility are generally from 8:00 a.m. through 5:00 p.m., Monday through Friday.

B. Cooperate with Owner in scheduling operations to minimize conflict and to permit continuous usage. Perform work not to interfere with operations of occupied areas.

1.03 SCHEDULING OF WORK

A. Make arrangements with Owner and schedule Work to avoid interference with normal operations of occupied areas. Submit schedule and summary of applicable Work within occupied areas and obtain Owner approval not less than two days prior to commencement of such Work.

1. Requests for use of certain existing loading zones, passage ways, and other similar spaces within areas outside limits of construction operations will be limited to day-by-day basis and must be approved in advance by Owner.

B. Coordinate access and scheduling of Work within tenant areas with Owner.

1.04 TORCH-CUTTING AND WELDING PROCEDURES

A. Notify Owner in advance of torch-cutting and welding operations performed within occupied areas; obtain approval prior to proceeding with such operations.

1. Neither open-flame torch-cutting, welding nor arc-welding are allowed without having secured appropriate permit from Fire Marshal or authority having jurisdiction.
2. Keep portable fire extinguisher of appropriate class within reach during welding or torch-cutting operations.

3. Screen arc-welding from vision of passersby.

B. Maintain a “Fire Watch” for minimum of 60 minutes after completion of each torch-cutting and welding operation.

1.05 UTILITY SERVICE OUTAGES

A. Keep utility and service outages to minimum and perform only after written approval of Owner is received.

1. Requests for outages will not be considered unless they include an identification of areas which will be affected by proposed outage.
2. Schedule outages for times other than normal business hours.
3. Make requests for outages minimum of five calendar days in advance of proposed outage. Request may be denied or postponed due to scheduled activities

B. Contractor: Responsible for investigating utility and service lines to determine effect of outage upon building operations outside of limit of operations. Obtain approval in advance from Owner to execute investigations.

1.06 KEYS

A. When necessary to perform Work, Owner will issue keys to existing mechanical / electrical equipment spaces.

B. Return keys at end of each work day; request keys on succeeding days, if necessary.

PART 2 – PRODUCTS

2.01 MATERIALS

A. Type and Quality of Existing Products: Use products or types of construction that exist in structure, as needed to patch, extend, or match existing Work.

1. Generally, Contract Documents do not define products or standards of workmanship present in existing construction.
2. Determine by inspecting and testing products where necessary, referring to existing work as quality standard.

B. New Materials: Comply with Specifications for each product involved.

1. Match existing products and work for patching existing work.

PART 3 – EXECUTION

3.01 EXAMINATION

A. Comply with provisions of Section 01 72 00, Common Execution Requirements.

1. Verify that areas are ready for alteration and remodeling.

B. Discrepancies: Verify dimensions and elevations indicated in layout of existing work.

1. Prior to commencing work, carefully compare and check Contract Documents for discrepancies in locations or elevations of work to be executed.
2. Refer discrepancies among Drawings and existing conditions to Architect for adjustment before work affected is performed.

3.02 PREPARATION

A. Cut, move, or remove items as necessary for access to alteration and renovation Work.
1. Remove unsuitable material not marked for salvage, such as rotted wood, corroded metals, deteriorated masonry and concrete, and other deteriorated materials. Replace materials as specified for finished Work.
2. Remove debris and abandoned items from area and from concealed spaces.

B. Cutting and Removal: Perform cutting and removal work to remove minimum necessary, and in manner to avoid damage to adjacent work. Cut finish surfaces such as masonry, tile, plaster, or metals by methods to terminate surfaces in straight line at natural point of division.

C. Prepare surface and remove surface finishes as necessary to provide for proper installation of new materials and finishes.

D. Close openings in exterior surfaces to protect existing Work from weather and extremes of temperature and humidity. Insulate ductwork and piping to prevent condensation in exposed areas.

E. Provide temporary barriers and closures to control operations to prevent spread of dust to occupied portions of building; refer to Section 01 50 00, Temporary Facilities and Controls.

3.03 INSTALLATION

A. Coordinate Work of alterations and renovations to expedite completion and to accommodate Owner occupancy.

B. Remove, cut, and patch Work in manner to minimize damage and to provide means of restoring products and finishes to specified condition.

1. Refinish visible existing surfaces to remain to specified condition with neat transition to adjacent finishes.

C. Install products as specified in individual Specification sections.

D. Where new Work abuts or aligns with existing, perform smooth and even transition to match existing adjacent surface in texture and appearance.

1. When finished surfaces are cut so that smooth transition with new Work is not possible, terminate existing surface along straight line at natural line of division and request instructions from Architect as to method of making transition.

3.04 ADJUSTMENTS

A. Fit Work at penetrations of surfaces as specified in Section 01 73 29, Cutting and Patching.

B. Patch or replace portions of existing surfaces which are damaged, lifted, discolored, or showing other imperfections. Repair substrate prior to application of finishes.

3.05 FINISHES

A. Finish new surfaces as specified in individual Specification sections.

B. Finish patches to produce uniform finish and texture over entire area. When finish cannot be matched, refinish entire surface to nearest intersections.

3.06 CLEANING

A. Comply with Section 01 72 00, Common Execution Requirements. Thoroughly clean areas and spaces affected by Work. Completely remove paint, mortar, oils, putty and items of similar nature.

B. Clean Owner-occupied areas daily. Clean spillage, overspray, and heavy collection of dust in Owner-occupied areas immediately.

C. Refer to drawings for dust control requirements between construction area and adjacent spaces.

END OF SECTION 01 35 16

SECTION 01 41 00 – REGULATORY REQUIREMENTS

PART 1 - GENERAL

1.01 GOVERNING LAWS, CODES AND STANDARDS

A. Contractor shall become fully informed of the requirements of all federal, state and local laws, codes, regulations, ordinances and authorities having jurisdiction relating to the construction and shall comply with them, including but not limited to the following:

1. Building Code: International Building Code (IBC), current adopted edition.
2. Texas Accessibility Standards (TAS), latest edition.

B. Applicable published standards or specifications of government agencies, technical associations, trade association, or other organizations are referenced herein. Work so referenced shall conform to or surpass the minimum standards of quality for materials and workmanship established by the designated standard or specification.

C. Standards referenced directly in the Contract Documents or by governing regulations have precedence over non-referenced standards which are recognized in the industry for applicability to the Work. Non-referenced standards recognized in the construction industry have direct applicability to the Work where not in conflict with standards which have precedence.

D. The latest edition and amendments adopted, published and available to the public on the date of this Project Manual for any referenced standard shall apply.

E. Where two or more standards are specified to establish quality, the product and workmanship shall conform to or surpass the requirements of both.

F. Where both a standard and a brand name are specified for a product in the Project Manual, the proprietary product names shall conform to or surpass the requirements of the specified reference standard. The listing of a trade name in the Project Manual shall not be construed as warranting that such product conforms to the respective reference standard, or that the product is available.

G. In case of conflict between reference standards, when more than one standard or code is cited, and these standards establish different or conflicting requirements for minimum quantities or quality levels, the most stringent requirement will be enforced, unless the Contract Documents specifically indicate a less stringent requirement. Refer to the Architect for a decision before proceeding if uncertainties about requirements exist.

H. Where copies of referenced standards are need for proper performance of the Work, the Contractor is required to obtain such copies directly from the publication source.

I. Refer to Section 01 42 00 Definitions and Abbreviations for a list of construction terms, industry organizations and government agencies to which reference may be made by abbreviations in the Project Manual and other Contract Documents.

PART 2 - NOT USED
PART 3 - NOT USED

END OF SECTION 01 41 00

SECTION 01 42 00 - DEFINITIONS AND ABBREVIATIONS

PART 1 - GENERAL

1.01 SUMMARY

A. Section Includes: Definitions of terms and abbreviations, and explanation of the organization, interpretation and use of the Drawings, Specifications and associated Contract Documents.

1.02 TERMINOLOGY

A. The following terms shall be understood as herein defined, as applicable in the context, unless the context clearly indicates otherwise.

1. ***Architect***: Martinez Architects, LP, or its designated representative(s).
2. ***Owner:***: City of Midland, or its designated representative(s).
3. ***Product***: Includes materials, equipment and systems.
4. ***Furnish***: To supply and deliver to the job site, ready for unpacking, assembly and installation.
5. ***Install***, ***Installation***, etc.: Refer to operations at the project site, including handling, storage, unpacking, assembly, erection, placing, anchoring, applying, connecting, working to dimension, finishing, curing, protecting, cleaning and similar operations.
6. ***Installer***: The entity (person or firm) engaged by Contractor, or its subcontractor or subsubcontractor, for performance of a particular unit of work at the site, including installation, erection, application and similar operations. Such entities ("Installers") must be experienced and expert in the operations they are engaged to perform.
7. ***Provide***: To furnish *and* install, complete and ready for the intended use.
8. ***Suitable***, ***reasonable***, ***proper***, ***correct***, ***necessary***, etc.: Such terms shall mean suitable, reasonable, proper, correct, or necessary for the purpose intended as required by the contract documents, in the judgment of the Architect.
9. ***Including***, ***such as***: Always to be understood in the most inclusive sense, namely, "including, but not limited to", and "such as, but not limited to".
10. ***Indicated***: A reference to information found elsewhere in the Contract Documents, including information in the Project Manual, schedules, drawings, details or notes.
11. ***Shown***, ***noted***, ***scheduled***, ***detailed***: Also used for reference to information shown on drawings and in schedules. These terms and the word "indicated" are used for the purpose of helping the reader locate the reference; no limitation of location is intended unless specifically stated.
12. ***Exposed***: Any item or surface, exterior or interior, which can be seen by a person outside the building, or a person inside any usable space within the building during normal activity.
13. ***Remove***: Where not applicable to salvage, retained materials, materials to be re-installed or relocated or otherwise qualified, means to disassemble, dismantle or demolish and transport from Owner's property.
14. ***Punch List***: A comprehensive list of items to be completed or corrected.

1.03 DRAWING INTERPRETATION

A. Product notes on the drawings are for identification of materials.

B. Sections and details show typical products and assemblies. Provide completely materials which are vignetted or only partially shown to avoid repetition. Each product indicated on drawings shall be continuous throughout all parts of the project where the section or the detail applies.

C. Provide related products and suitable workmanship at corners and intersections necessary for structural integrity, weathertightness and continuity of appearance.

D. Only major attachments and accessories are indicated in the drawings and specified in the Project Manual. Provide all anchors, bolts, screws, nails, adhesives and other fastenings necessary to produce a firmly fastened, smoothly functioning, weathertight, secure and neat installation.

E. Larger scale drawings generally take precedence over smaller scale.

F. Use numerical dimensions indicated. Do not scale drawings. Check figures on drawings before starting the work affected.

G. If necessary dimensions or figures are inadvertently omitted or conflict with other dimensions, drawings or specifications, notify the Architect. Do not proceed with the work without correct and definite information provided by the Architect in writing.

1.04 PROJECT MANUAL INTERPRETATION

A. Section titles do not limit the content, scope or meaning of the section, nor is it fully descriptive of the requirements specified therein.

B. Each section of the specifications has been subdivided into parts for uniformity and convenience. These parts and the titles of these parts do not limit the requirements of the text.

C. The work specified in any one Section is related to and dependent upon the work specified in other sections. Work specified in all Sections is governed by the terms of the Contract and provisions of the General Conditions, Supplementary Conditions and Division 1 General Requirements.

D. The cross-reference paragraphs Related Requirements etc. are general items included for the convenience of Project Manual users and shall not be considered all-inclusive in any case.

E. Cross referencing to other Sections may be made by inclusion of the section title in capital letters without a preceding word Section or Section number (e.g. See UNIT MASONRY).

F. Imperative Language: Used generally; except as otherwise indicated, requirements expressed imperatively are to be performed by Contractor. For clarity of reading at certain locations, contrasting indicative language is used to describe responsibilities to be fulfilled indirectly by Contractor, or when so indicated, by others.

G. If requirements of the Contract Documents are unclear or conflict with each other, and if conditions indicated in the Contract Documents do not reflect accurately the conditions found to exist at the site, request and receive clarification, interpretation or further instruction from the Architect before proceeding with the affected work.

1.05 ABBREVIATIONS

A. Following is a list of construction terms, industry organizations and government agencies to which reference may be made by abbreviations in the Project Manual and other Contract Documents.

AAMA	American Architectural Manufacturers' Association
ACI	American Concrete Institute
ACIL	American Council of Independent Laboratories
AIA	American Institute of Architects
AISC	American Institute of Steel Construction
AISI	American Iron and Steel Institute
AMCA	Air Movement and Control Association
ANSI	American National Standards Institute
APA	American Plywood Association
ARI	Air Conditioning and Refrigeration Institute
ASHRAE	American Society of Heating, Refrigeration and Air Conditioning Engineers
ASME	American Society of Mechanical Engineers
ASTM	American Society for Testing and Materials
AWI	Architectural Woodwork Institute
AWPA	American Wood Preservers Association
AWPB	American Wood Preservers Bureau
AWPI	American Wood Preservers Institute
AWS	American Welding Society
BIA	Brick Institute of America
BHMA	Builder's Hardware Manufacturers Association
CDA	Copper Development Association
CRSI	Concrete Reinforcing Steel Institute
CSI	Construction Specifications Institute
DHI	Door Hardware Institute
EPA	Environmental Protection Agency
FGMA	Flat Glass Marketing Association
FM	Factory Mutual
FS	Federal Specification
GA	Gypsum Association
MIL	Military Standard
NAAMM	National Association of Architectural Metal Manufacturers
NCMA	National Concrete Masonry Association
NEC	National Electrical Code (Published by NFPA)
NEMA	National Electrical Manufacturers Association
NFBU	National Board of Fire Underwriters
NFPA	National Fire Protection Association
NIST	National Institute of Standards & Technology (formerly National Bureau of Standards)
NRCA	National Roofing Contractors' Association
NRMCA	National Ready Mix Concrete Association
NWMA	National Woodwork Manufacturers' Association
OSHA	Occupational Safety and Health Administration (U.S. Department of Labor)
PCA	Portland Cement Association
PCI	Prestressed Concrete Institute
PS	Product Standard of NIST (U.S. Department of Commerce)
SDI	Steel Door Institute
SFPA	Southern Forest Products Association

SPIB	Southern Pine Inspection Bureau
SMACNA	Sheet Metal and Air Conditioning Contractors National Association
SSPC	Steel Structures Painting Council
TCA	Tile Council of America
UL	Underwriters' Laboratories
WWPA	Western Wood Products Association

PART 2 - NOT USED

PART 3 - NOT USED

END OF SECTION 01 42 00

SECTION 01 43 00 - INSPECTION AND TESTING LABORATORY SERVICES

PART 1 - GENERAL

1.01 DESCRIPTION

A. All inspection and testing laboratory services will be provided and paid for by the Owner. An inspection and testing lab will be selected by the Owner and the Contractor will be notified as soon as possible.

B. The Owner will pay for the initial inspection and testing laboratory services of materials that comply with the requirements of the Contract Documents. The Contractor shall pay for re-inspection and re-testing of materials that do not comply with the requirements of the Contract Documents.

C. The Contractor shall cooperate with the inspection and testing laboratory in all matters pertaining to the work. The Owner retains the option to add to or delete any or all inspection and testing specified herein.

1.02 RELATED REQUIREMENTS

A. Conditions of the Contract: Inspections and testing required by laws, ordinances, rules, regulations, orders or approvals or public authorities.

B. Respective Sections of Specifications. Certification of products.

C. Each Specification Section Listed: Inspection and laboratory test required and standards for inspection and testing.

D. Testing laboratory inspection, sampling and testing are required for, but not limited to the following:

1. Division 2: All Sections regarding earthwork and related work.
2. Section 03 30 00 - Cast-In-Place Concrete
3. Section 03 32 10 - Lightweight Insulating Concrete Deck System
4. Section 04 20 00 - Unit Masonry
5. Section 05 12 23 - Structural Steel
6. Division 7: Roofing Sections and related work.
7. Division 22-33 - Earthwork (Compaction of trenches)
8. Division 23 - HVAC (Inspection and testing of welds and bolts on mechanical piping)
9. Section 31 63 29 - Drilled Concrete Piers and Shafts
10. As requested by the Owner, Architect, or Engineer.

1.03 AUTHORITIES AND DUTIES OF THE LABORATORY

A. The inspection and testing laboratory is not authorized to revoke, alter, relax, enlarge, or release any requirement of the Specifications, or to approve or accept any portion of the Work. When it appears that the material furnished or work performed by the Contractor fails

to fulfill specification requirements, the inspection and testing laboratory shall promptly notify the General Contractor, Architect, Engineers, supplier and/or subcontractor providing or preparing the materials or work being tested of such deficiencies.

B. The inspection and testing laboratory shall promptly distribute copies of the laboratory test and inspection reports. Standard distribution shall include copies of all reports to the Owner, Architect, and General Contractor. The Structural Engineer, Civil Engineer, MEP Engineer, concrete supplier, and any outside consultants shall receive copies of the testing results regarding their particular phase of the Project.

1.04 TESTING LABORATORY GUIDELINES AND PROCEDURES

A. Technicians scheduled to perform specific inspection and testing services must be qualified to review and perform other services that overlap, i.e. earthwork, foundation inspections, rebar inspection, and concrete when scheduled concurrently at the Project site.

B. Technician time for services performed will be reimbursed at a regular time rate. Compensation at the overtime rate will be considered for any hours over eight (8) hours spent at the job site on a single day, field testing services performed on a Saturday or Sunday, and any field services performed on a recognized holiday.

C. Concrete design mixes will receive a cursory review with any discrepancies reported to the Architect/Engineer.

D. Nuclear density testing will be based on a daily rental rate for the actual testing equipment, compensation on a per test basis will not be considered.

E. Report distribution shall include the Owner, Architect, Contractor, Civil Engineer, Structural Engineer, and others requesting or requiring review of the specific testing results.

F. There will be a three (3) hour minimum for each scheduled testing service. Vehicle charges will be included on a per trip basis.

G. Cylinders will be pick-up by the technician performing test the next day in order to have them cure under laboratory conditions.

H. Structural steel inspections shall include a plant visit reviewing shop fabrication, welding and an overall review of the shop fabrication quality control standards.

I. The Contractor shall bear the responsibility of scheduling all of the inspection and testing services. The Contractor and the testing laboratory shall assume full responsibility to coordinate the inspection and testing services. Cancellations and or failed test will be reimbursable to the Owner by the Contractor.

PART 2 – PRODUCTS - Not Used

PART 3 - EXECUTION

3.01 GENERAL

A. Inspection and testing services shall include, but not be limited to those specified below or which are necessary or required during course of construction to ascertain specification compliance and which may be deemed necessary by Architect, Engineer, or Owner to ensure the quality of the Work.

B. Where requirements of this Section are in conflict with requirements noted on the Contract Drawings or other Sections of the Specifications, the more stringent requirement shall apply, unless directed otherwise by Architect.

C. Should any unusual conditions be encountered during any operations, the laboratory shall be contacted immediately so that additional inspection and testing, as applicable, can be provided.

D. The Owner reserves the right to add to or delete any or all inspection and testing specified herein.

3.02 SITE GRADING

A. Testing Services:

1. Perform field tests for moisture density properties.
   a. In each compacted fill layer, provide one (1) field test for every 5,000 square feet of area, but not less than three (3) tests.
   b. At paved area, provide one (1) field test for every 5,000 square feet, but not less than three (3) tests.

3.03 COMPACTING FILL AND BACKFILL

A. Testing Services:

1. Perform field test for moisture density properties: Within the building line provide one (1) field test in each compacted layer for every 5,000 square feet of area, but not less that three (3) tests.

3.04 PAVING

A. Testing Services:

1. Perform field tests for moisture density properties:

   a. Provide field testing of the sub-grade as described in Paragraph 3.2, A, above.
   b. Paving sub-base, provide one (1) field test for every 5,000 square feet of area of crushed limestone or caliche sub-base, if any.
   c. Lime treated sub-grade, provide one (1) field test for every 5,000 square feet of area of lime treated sub-grade, if any, for content of lime and sub-grade compaction.
   d. Cement soil stabilization, if any, provide one (1) field test for every 5,000 square feet of area of cement stabilized sub-grade for content of cement and sub-grade compaction.

3.05 PIPED SITE UTILITIES

A. Inspection and Observation Services:

1. Inspection of trenches for proper alignment and grade.
2. Inspection of pipe bedding and supports.
3. Inspection of pipe, joints, jointing material, and thrust blocks prior to installation of pipe.
4. Inspection of installation of pipe and joints.
5. Observation of testing of piped utilities performed by Contractor.

3.06 EARTHWORK

A. Inspection and Observation Services:

1. Refer to and include, as applicable, work of Paragraphs 3.2, 3.3, 3.4, and 3.5 above.
2. When perimeter and underfloor drainage systems are specified or required, inspect installation of such systems for conformance with specified materials and detail requirements.
3. When temporary drainage and dewatering systems are used to keep excavations dry, inspect the systems for adequacy. Ground water should be maintained at least two (2) feet below bottom of excavation.
4. Review the equipment and methods used in placement and compaction of fill materials and inspect materials used and compaction of fills in general earthwork and in backfilling around structures, and in backfilling in utility trenches.
5. Notify the Contractor in writing and the Architect immediately if footings and slabs-on-grade are placed on unfinished soil or frozen ground and when footings and slabs-on-grade are not protected from frost damage.
6. Notify the Architect when soil with allowable bearing capacity noted is encountered at elevation above the bottom of footing shown.
7. Notify the Architect and Contractor if soil with required bearing capacity noted is not encountered at bottom of footing elevation shown. Bottom of footing shall be adjusted as recommended and approved by the Structural Engineer and Architect.
8. Review rock excavation techniques, if required, and monitor blasting induced ground motions, as appropriate.
9. Review calculations and shop drawings for sheeting, shoring, and underpinning prepared by the Contractor, if required.

B. Testing Services:

1. References (As applicable for tests):

a. ASTM International (ASTM)

1) D698, Test Method for Laboratory Compaction Characteristics of Soil Using Standard Effort (12,400 ft-lb/ft^3 (600 kN-m/m^3)
2) D2922, Standard Test Method for Density of Soil and Soil-Aggregate In Place By Nuclear Methods (Shallow Depth)
3) D4318, Liquid Limit, Plastic Limit, and Plasticity Index of Soils

b. American Association of State Highway and Transportation Officials (AASHTO)

1) T89, Determining the Liquid Limit of Soils
2) T90, Determining the Plastic Limit and Plasticity Index of Soils
3) T99, Moisture-Density Relations of Soils Using a 2.5 kg (5.5 lb) Rammer and a 305-mm (12-in) Drop
4) T238, Density of Soil and Soil Aggregates In Place By Nuclear Methods (Shallow Depth)

2. Perform sieve analysis to develop grain size distribution curves for materials to be used for subgrade, fill under slab-on-grade, and backfills.
3. Establish the moisture density relation of soils to be used as fill using the method best suited to the type of fill material.
4. Determine moisture content of all fill materials before placement and advise Contractor when it is or is not suitable to achieve required compaction.
5. Determine Liquid Limit in accordance with ASTM D4318 or AASHTO T89, Plastic Limit in accordance with ASTM D4318, and Plasticity Index in accordance with ASTM D4318 of all fill material.
6. Perform one (1) in place density test for each 2,500 square feet (280 square yards) of existing subgrade material.
7. Perform Moisture-Density curve in accordance with ASTM D698 or AASHTO T99 for one (1) type of fill material. If the original choice of material does not meet the specifications, the Contractor shall pay for additional testing.
8. Perform in place density tests of each lift of compacted fill at locations adequate to evaluate the degree of compaction of all fill areas. Conduct one (1) test for each 2,500 square feet (280 square yards) of each lift of compacted fill.

C. Reports: Submit reports to Architect with the following information:

1. Type and condition of soil at footing bottoms.
2. Level of water table in the excavated areas.
3. Grain size distribution of fill materials (average of three (3) tests).
4. Moisture density test results.
5. In place density test results with moisture content and relative density of each layer of compacted fill. Include with in place density test results, a plan showing location of each test.
6. Notify Architect by telephone within one (1) hour of the discovery of the following conditions and follow up telephone notification with written report.

a. Materials used, or degree of soil compaction not meeting specified requirements.
b. Frost and freeze protection requirements for excavation bottoms not being complied with.
c. Water in excavations which is not being removed prior to work being performed in excavation.

3.07 DRILLED AND UNDERREAMED (BELLED) PIERS

A. Inspection and Observation Services:

1. Provide full time services for the review of all drilled pier foundation inspections. Including a daily report noting grid lines and locations of each pier drilled. After the

foundation shaft has been drilled, the lab shall test an undisturbed sample and verify that it meets or exceeds the design specification.

2. The drilling and verification of suitable soil for bearing capacity. Notify the Architect when soil with allowable bearing capacity noted is encountered at elevation above the bottom of pier shown. Notify the Architect and Contractor if soil with required bearing capacity noted is not encountered at bottom of pier elevation shown. Bottom of pier shall be adjusted as recommended and approved by the Structural Engineer and Architect.

    a. Drilled shaft has been drilled plumb and within specified vertical and horizontal tolerances specified by the Structural Engineer.
    b. Drilled shaft and underreamed bells are excavated to specified depths and/or if conditions differ from those presented, to notify the Structural Engineer.
    c. Drilled shaft and underreamed bell bottoms are kept dry at all times, cleaned of excess cuttings, or all obstructions prior to placing reinforcing steel and concrete. If groundwater seepage occurs, it shall be removed prior to concrete placement or controlled with temporary steel casing to maintain the shaft integrity up to the concrete placement.
    d. Concrete reinforcing steel shall be checked for type, size, adequate placement and lap lengths, and doweled bars.

3.08 CONCRETE REINFORCING STEEL AND EMBEDDED METAL ASSEMBLIES

A. Inspection and Observation Services: Inspect all concrete reinforcing steel prior to placing of concrete for compliance with Contract Documents and approved shop drawings. All instances of noncompliance with Contract Documents and approved shop drawings shall be immediately brought to the attention of the Contractor for correction and then, if uncorrected, reported to the Architect.

B. Reports:

1. Observe and Report on the Following:

    a. Number and size of bars.
    b. Bending and lengths of bars.
    c. Splicing.
    d. Clearance to forms including chair heights.
    e. Clearance between bars or spacing.
    f. Rust, form oil, and other contamination.
    g. Grade of steel.
    h. Securing, tying, and chairing of bars.
    i. Excessive congestion of reinforcing steel.
    j. Installation of anchor bolts and placement of concrete around such bolts.
    k. Fabrication of embedded metal assemblies, including visual inspection of all welds.
    l. Visually inspect studs and deformed bar anchors on embedded assemblies for compliance with Contract Documents. Check number, spacing and weld quality. If, after welding, visual inspection reveals that a sound weld or a full 360 degree fillet has not been obtained for a particular stud or bar, such stud or bar shall be struck with a hammer and bent 15 degrees off

perpendicular and then bent back into position. Anchors failing this test shall be replaced.

C. Testing Services: Will be required of all suspect materials or workmanship at the discretion of the Architect, Engineer, or Owner.

3.09 REINFORCING STEEL MECHANICAL SPLICES

A. Inspection and Observation Services:

1. Visually inspect and report on the completed condition of each mechanical splice of reinforcing steel.
2. Each mechanical splice shall be visually inspected to ensure compliance with the I.C.B.O. Reports and the manufacturer's published criteria for acceptable completed splices.
3. Special emphasis shall be placed on inspection of the end preparation of each bar to be spliced, as required by the I.C.B.O. Report.

B. Reports: Submit reports to Architect with the following information:

1. Submit copies of manufacturer's published criteria for acceptable completed splices prior to observing mechanical splices.
2. Reports on each mechanical splice shall indicate location of the splice, size of bars spliced, and acceptability or rejection of splice. Reasons for rejection shall be shown on each report.

3.10 CAST-IN-PLACE CONCRETE

A. Inspection and Observation Services:

1. Review concrete design mixes proposed for use on the Project.
2. Provide full time services for all structural building concrete in drilled piers, grade beams, slab on grade, columns, concrete paving, and other miscellaneous structural concrete. Refer to and include work for reinforcement steel specified in Paragraphs 3.8 and 3.9 above.
3. On the first day’s batching of each type and each strength of concrete, inspect and observe materials for concrete, batch weights, moisture content, and gradation of fine and course aggregate.
4. Provide additional inspection if the Contractor elects to use concrete from more than one (1) source of supply simultaneously. All costs for such additional inspection shall be borne by the Contractor.

B. Testing Services:

1. References (As applicable for field and laboratory tests):
   a. American Concrete Institute (ACI)
      1) 214, Recommended Practice for Evaluation of Strength Test Results of Concrete
      2) 318, Building Code Requirements for Reinforced Concrete
   b. ASTM International (ASTM)

1) C31, Practice for Making and Curing Concrete Test Specimens in the Field
2) C39, Standard Test Method for Compressive Strength of Cylindrical Concrete Specimens
3) C138, Test Method for Unit Weight, Yield, and Air Content (Gravimetric) of Concrete
4) C143, Slump of Hydraulic Cement Concrete
5) C173, Air Content of Freshly Mixed Concrete by the Volumetric Method.

2. Compression Test Cylinders:

a. Make, transport, cure and test six (6) inch diameter by 12 inch long test specimens taken from concrete being cast. Test cylinders will be made, handled, cured, and stored in accordance with ASTM C31, at the rate of four (4) cylinders minimum for each 50 cubic yards or fraction thereof of each class of concrete placed in any one (1) day.

b. Handle newly made cylinders carefully to avoid cracking the green concrete. Store these cylinders in a box at temperatures between 60 degrees F and 80 degrees F during first 24 hours. Contractor shall construct a suitable box and provide heat or cooling, if necessary, to maintain cylinders at proper temperature.

c. Place cylinders in laboratory storage, with molds removed, under moist curing conditions and temperature of 73 degrees plus or minus three (3) degrees F 24 hours after casting maintain these moist curing conditions until specimens are tested.

d. Of the test cylinders taken per 50 cubic yards or fraction thereof, test one (1) at seven (7) days and two (2) at 28 days after casting date. Store one (1) cylinder for testing at 56 days in the event the 28 days strength tests do not meet strength requirements. Test cylinders in accordance with ASTM C39. When Type III cement is used, test at three (3) days instead of seven (7) days.

e. Each 28 day compression test report shall clearly indicate average strength results, concrete slump and air content, concrete and ambient air temperatures, and how much water was added on site by contractors as of the report date and for the class of concrete being reported.

f. Maintain a moving average for compressive strength based on the three (3) latest 28 day test results to check compliance with specification requirements. The figures for the standard deviation and moving average for strength will be kept continuously up to date and submitted on a weekly basis to the Architect and Engineer. Maintain a continuously up to date log in both graphical and tabulated form for each class of concrete.

1) the average of the latest three (3) test results;
2) the lowest average of three (3) consecutive test results recorded to date;
3) the average of all sets of three (3) consecutive test results;
4) the percentage of tests falling below specified strength;
5) the lowest single test result.

g. Maintain a moving average for range of test results for quality control purposes as described in ACI 214, Chapter 4, Paragraphs 4.4 and 4.5. Graphical reports of moving average for range shall be submitted to the Architect and Engineer on a weekly basis.

h. Slump Tests: Conduct in accordance with ASTM C143; one (1) test shall be performed for each sampling for strength tests. Slump shall be considered acceptable if the field test is within the range of design slump plus or minus one (1) inch. For concrete placed by pumping, one (1) test shall be performed at the pump and one (1) at the point of deposit. Slump loss through pumping will be acceptable to the Architect and Engineer. Slump measured at the pump shall be evaluated for acceptance relative to the design slump in accordance with the criteria previously specified.

i. Air Content Tests: Conduct in accordance with ASTM C173; test air entrained concrete only, one (1) test shall be performed for each sampling for strength tests. Air content shall be considered acceptable if the field test is in the range of the design air content plus two (2) percent.

j. Unit Weight Tests: Conduct in accordance with ASTM C138; test each sample of lightweight concrete taken for strength tests. Unit weight shall be considered acceptable if the field test shows a fresh unit weight equal to the design unit weight plus or minus 2 pcf.

k. Chloride Tests: Perform one (1) total chloride ion test for each class of concrete placed each day. If the total chloride ion content is determined to be excessive by the Architect or Engineer, water soluble chloride ion tests shall be performed at the Contractor's expense.

3. Noncompliance: In the event the initial tests above indicate that concrete may not meet the specified requirements, the Architect or Engineer may, at his discretion, order additional tests be performed at the Contractor's expense. Load tests shall comply with requirements of ACI 318.

3.11 MASONRY

A. Inspection and Observation Services:

1. Inspection of placement of reinforcement including condition, grade, size, location, spacing, and lap splices.
2. Review mortar design mixes.
3. Inspection of laying, mortaring, and grouting of concrete masonry units and elements.

B. Testing Services:

1. References (As applicable for tests required):

a. ASTM International (ASTM)

1) C140, Standard Test Methods of Sampling and Testing Concrete Masonry Units
2) C780, Standard Test Method for Preconstruction and Construction Evaluation of Mortars for Plain and Reinforced Unit Masonry
3) C1019, Standard Test Method for Sampling and Testing Grout

4) E447, Standard Test Methods for Compressive Strength of Laboratory Constructed Masonry Prisms

2. Testing of Concrete Masonry Units (CMU):

a. Preconstruction: Perform the following tests in accordance with ASTM C140.

1) Compressive Strength
2) Absorption
3) Weight
4) Moisture Content
5) Dimensions

3. Mortar Tests:

a. Preconstruction: Perform the following tests in accordance with ASTM C780 on each type of mortar mix used on the Project.

1) 28 Day Compressive Strength
2) Water Retention

b. Construction: Perform 28 day compressive strength test in accordance with ASTM C780 on each type of mortar mix used on the Project at the rate of one (1) test per 2,000 square feet of masonry.

4. Refer to and include work for reinforcing steel specified in Paragraphs 3.5 and 3.6 above.

5. Grout Tests:

a. Preconstruction: Perform the following tests in accordance with ASTM C1019 on each type of grout mix used on the Project.

1) Slump Test
2) 28 Day Compressive Strength
3) Construction: Perform 28 day compressive strength test in accordance with ASTM C1019 on each type of grout mix used on the Project at the rate of one (1) test per 2,000 square feet of masonry.
4) Prism Test: Perform preconstruction 28 day compressive strength test on concrete masonry walls in accordance with ASTM E447, Method B.

3.12 STRUCTURAL STEEL

A. Inspection Services:
1. General:

a. Review submittals from fabricator.
b. Review all shop and field welder's qualifications.

c.

2. Structural Steel and Mechanical Piping:

   a. Shop inspect each member for defects such as cracks, excessive camber, deformation, and specified surface preparation prior to shop priming or galvanizing.
   b. Inspect shop priming for coverage and measure of mil thickness.
   c. Perform visual inspection of all welds; measure 15 percent of welds.
   d. Inspect size and placement of anchor bolts in concrete and masonry.
   e. Verify erector surveys plumbness of each column.
   f. Verify erector inspects alignment of beams, shelf angles, lintels, joists, joist girders, and other similar supporting members.
   g. Perform visual inspection of bolts to determine that the method(s) used are in conformance with the Contract Documents.

3. Steel Stud Shear Connectors:

   a. Field inspect installation methods and welds.
   b. Verify number of studs, stud placement and length for conformance with the Contract Documents.

B. Testing Services:

1. References (As applicable for tests required):

   a. American Institute of Steel Construction (AISC)
      1) Specifications for Structural Joints Using ASTM A325 or A490 Bolts
   b. ASTM International (ASTM)
      1) A6, General Requirements for Rolled Steel Plates, Shapes, Sheet Piling, and Bars for Structural Use
      2) A325, Standard Specification for Structural Bolts, Steel, Heat Treated, 120/105 ksi Minimum Tensile Strength
      3) A490, Standard Specification for Heat-Treated Steel Structural Bolts, 150 ksi Minimum Tensile Strength
   c. American Welding Society (AWS)
      1) D1.1, Structural Welding Code, Steel

2. Structural Steel:

   a. Perform all tests required by Structural Welding Code and authorities having jurisdiction.
   b. Ultrasonically test all edges of material greater than 1-1/2 inch thick that is to be welded for evidence of laminations, inclusions, or other discontinuities. The extent to which such defects will be permitted and the extent of repair permitted shall be in accordance with ASTM A6.
   c. The root layer of all multiple pass welds and the backside of groove welds made from both sides, after back gouging or chipping, shall be tested by magnetic particle or dye penetration if magnetic particle is not feasible.
   d. Fillet welds for beam and girder shear connections (15 percent at random) shall be tested by magnetic particle for final pass only.

e. Fillet welds for plate girder flange/web connections shall be tested by magnetic particle for final pass only.
f. Ultrasonically test 100 percent of full penetration welds.
g. Ultrasonically test 100 percent of partial penetration column splice welds.
h. Test 100 percent of continuity plate fillet welds by magnetic particle for final pass.
i. Perform all equipment calibrations and production tests of high strength bolt connections as required by AISC Specifications for Structural Joints Using ASTM A325 or A490 Bolts.
j. Randomly sample bolts, nuts, and washers from the Project Site at a rate sufficiently to test and verify compliance with ASTM Standards.
k. When bolts are tightened by "turn-of-the-nut" method, check by calibrated torque wrench 25 percent of bolts in each shear connection, but not less than two (2) bolts per connection.
l. In addition provide at least one (1) test per 50 linear inches of weld by each welder, except that 100 percent of full penetration welds shall be tested using approved radiographic, magnetic particle, or ultrasonic method. Tolerance for welds shall be in accordance with the requirements of AWS D1.1 and the Contract Drawings.
m. Perform tension tests on steel in accordance with ASTM A6, if required.
n. Perform load tests on structural members in place, if required.

3. Steel Stud Testing:

a. Test not less than ten (10) percent of studs on any beam, plus all studs indicating imperfections. Studs will be considered imperfect if, after welding, visual inspection reveals:
1) Studs lacking full 360 degree weld.
2) Studs which have been repaired by welding.
b. Studs shall be tested by striking with a hammer and bending to approximately 15 degrees off vertical. Bend studs lacking full 360 degrees weld in a direction opposite to the side lacking the weld. Replace studs that crack after this test either in the weld or the shank. Studs meeting this test will be considered acceptable and left in place.

3.13 SPRAYED-ON FIREPROOFING

A. Inspection Services: Inspection of sprayed-on fireproofing to ascertain compliance with Contract Documents.

B. Testing Services:

1. References (As applicable for tests required):

a. ASTM International (ASTM)
1) E605, Thickness and Density of Sprayed Fire-Resistive Material (SFRM) Applied to Structural Members
2) E736, Cohesion/Adhesion of Sprayed Fire-Resistive Materials Applied to Structural Members

2. Perform tests on sprayed-on fireproofing for thickness and density in accordance with ASTM E605.
3. Perform tests on sprayed-on fireproofing for cohesion and adhesion in accordance with ASTM E736.

END OF SECTION 01 43 00

SECTION 01 50 00 - TEMPORARY FACILITIES AND CONTROLS

PART 1 - GENERAL

1.01 GENERAL:

A. Furnish all temporary facilities, utilities and services necessary to complete the Work, including water, sanitary facilities, electrical lighting, power, telephone, heating, ventilating, air conditioning, security and regularly-scheduled trash removal.

B. Provide use of temporary facilities, utilities and services to Owner's separate contractors, if any, as necessary for the accomplishment of the work of their respective contracts for the completion of the Project, except as otherwise specifically indicated.

C. Separate contractors shall provide their own tools, construction equipment, ladders, scaffolding, and temporary storage facilities (except where feasible to store materials within the building).

D. Contractor shall provide adequate provisions for onsite operations of temporary facilities, equipment and operations of the Fire Department Onsite activities, personnel equipment, supplies and materials shall not interfere nor hinder access for the Fire Department.

1.02 QUALITY ASSURANCE: Comply with applicable codes and standards.

1.03 PROJECT CONDITIONS: Keep services and facilities clean and neat in appearance. Allow no public nuisances or dangerous, hazardous or unsanitary conditions at the site. Do not overload facilities.

1.04 PROGRESS CLEANING

A. General: Clean Project site and work areas daily, including common areas. Coordinate progress cleaning for joint-use areas where more than one installer has worked. Enforce requirements strictly. Dispose of materials lawfully.

1. Comply with requirements in NFPA 241 for removal of combustible waste materials and debris.
2. Do not hold materials more than 7 days during normal weather or 3 days if the temperature is expected to rise above 80 deg F (27 deg C).
3. Containerize hazardous and unsanitary waste materials separately from other waste. Mark containers appropriately and dispose of legally, according to regulations.

B. Site: Maintain Project site free of waste materials and debris.

C. Work Areas: Clean areas where work is in progress to the level of cleanliness necessary for proper execution of the Work.

1. Remove liquid spills promptly.
2. Where dust would impair proper execution of the Work, broom-clean or vacuum the entire work area, as appropriate.

D. Installed Work: Keep installed work clean. Clean installed surfaces according to written instructions of manufacturer or fabricator of product installed, using only cleaning materials specifically recommended. If specific cleaning materials are not recommended, use cleaning materials that are not hazardous to health or property and that will not damage exposed surfaces.

E. Concealed Spaces: Remove debris from concealed spaces before enclosing the space.

F. Exposed Surfaces in Finished Areas: Clean exposed surfaces and protect as necessary to ensure freedom from damage and deterioration at time of Substantial Completion.

G. Waste Disposal: Burying or burning waste materials on-site will not be permitted. Washing waste materials down sewers or into waterways will not be permitted.

H. During handling and installation, clean and protect construction in progress and adjoining materials already in place. Apply protective covering where required to ensure protection from damage or deterioration at Substantial Completion.

I. Clean and provide maintenance on completed construction as frequently as necessary through the remainder of the construction period. Adjust and lubricate operable components to ensure operability without damaging effects.

J. Limiting Exposures: Supervise construction operations to assure that no part of the construction, completed or in progress, is subject to harmful, dangerous, damaging, or otherwise deleterious exposure during the construction period.

1.05 EROSION AND SEDIMENTATION CONTROL

A. To the maximum extent practicable, prevent erosion or displacement of soils and discharge of soil-bearing water runoff to adjacent properties and waterways.

B. Provide erosion and sedimentation control during the entire project in accordance with applicable laws, regulations, requirements and guidelines of all authorities having jurisdiction.

C. Comply with *Storm Water Management Handbook for Construction Activities*, (2001 edition) and *Storm Water Quality Management Guidance Manual* (2001 edition), prepared by Harris County/Harris County Flood Control District and the City of Houston; copies may be obtained from Storm Water Management Task Force, c/o Turner, Collie and Braden, Inc., 5757 Woodway, Houston, TX 77057, P.O. Box 131066, Houston, TX 77219; direct requests for copies or further information to TC&B at (713) 267-3219.

D. See Section 01 57 00 Source Control for additional information.

PART 2 - PRODUCTS

2.01 EQUIPMENT

A. Provide equipment suitable for use intended.

B. First Aid Supplies: Comply with governing regulations.

C. Fire Extinguishers: Provide hand-carried, portable UL-rated, class "A" fire extinguishers for temporary offices and similar spaces. In other locations provide hand-carried, portable, UL-rated, class "ABC" dry chemical extinguishers, or a combination of extinguishers of NFPA recommended classes for the exposure.

PART 3 - EXECUTION

3.01 TEMPORARY FACILITIES, UTILITIES, PROTECTION AND CONTROLS

A. Provide and maintain construction equipment and storage facilities for the Work of this Contract:

1. Construction equipment.
2. Dewatering and pumping equipment.
3. Storage facilities, including watertight storage for all materials and equipment which could be damaged by storage in the open.

B. Provide security and protection requirements:

1. Fire extinguishers.
2. Building enclosure and lock-up.
3. Temporary fencing or enclosures with locking gates or doors for portions of the building that are not enclosed or lockable, areas where building materials and equipment are stored and elsewhere, to the extent deemed by the Contractor to be necessary for safety and security. Owner temporary facilities and operations shall not be enclosed within site temporary fencing.
4. Pest control.

C. Provide construction and personnel support facilities:

1. Contractor's field office, including phone for use of all involved in the Project; pay for all local calls. Long distance calls shall be paid for by the party making the call.
2. Water and Sanitary facilities.
3. Lighting and power.
4. Heating, ventilating and air conditioning.
5. Regularly-scheduled trash removal.

D. Provide protection, operate facilities and conduct operations to comply with environmental regulations and minimize the possibility that air and waterways might be contaminated or polluted, or that other undesirable effects might result.

1. Comply with regulations of governing authorities.
2. Prevent soil erosion and sedimentation on site and onto or into adjoining property, utilities, storm sewers, easements and rights-of-way.
3. Remove promptly and properly dispose of standing water.
4. Take necessary fire prevention measures. Do not burn waste materials.
5. Do not bury debris or excess materials on the Owner's property.
6. Do not discharge harmful or dangerous materials into drains.
7. Remove waste materials from the site and dispose of legally.
8. Operate safely and efficiently.

E. Site Enclosure Fence: Before construction operations begin, furnish and install site enclosure fence in a manner that will prevent people and animals from easily entering site except by entrance gates. Enclosures shall allow for the access and operations temporary onsite housing of Fire Department Personnel.

END OF SECTION 01 50 00

SECTION 01 55 13 - STABILIZED CONSTRUCTION EXIT

PART 1 - GENERAL

1.01 SCOPE

A. This Section describes the installation of erosion and sedimentation control for stabilized construction exits utilized during construction and prior to the final development of the site.

1.02 RELATED DOCUMENTS

A. Drawings and general provisions of Contract, including General Conditions, Special Conditions, and Division 1 Specification Sections, apply to this Section.

1.03 REFERENCE STANDARDS

A. The publications listed below form a part of this Specification to the extent referenced. The publications are referred to in the text by the basic designation only.

B. American Society for Testing and Materials (ASTM).

C. ASTM D 4632 - Standard Test Method for Breaking Load and Elongation of Geotextile (Grab Method).

1.04 SUBMITTALS

A. Manufacturer's catalog sheets and other pertinent information on geotextile fabric.

B. Sieve analysis of aggregates conforming to requirements of this Section.

PART 2 - PRODUCTS

2.01 SEPARATION GEOTEXTILE

A. Provide woven or nonwoven geotextile fabric made of either polypropylene, polyethylene, ethylene, or polyamide material. Geotextile fabric shall have a minimum grab strength of 270 psi in any principal direction (ASTM D-4632) and the equivalent opening size between 50 and 140, with the appropriate opening size to be approved in the review process based on the characteristics of the disturbed material. Both the geotextile and threads shall be resistant to chemical attack, mildew and rot and shall contain ultraviolet ray inhibitors and stabilizers to provide a minimum of six months of expected usable construction life at a temperature range of 0 degrees F to 120 degrees F. Representative Manufacturers: Mirafi Inc., Curlex, or preapproved equivalent.

2.02 COARSE AGGREGATES

A. Coarse aggregates shall consist of crushed stone, gravel, crushed blast furnace slag, or combinations thereof. Aggregate shall be composed of clean, hard, durable materials free from adherent coatings, salt, alkali, dirt, clay, loam, shale, soft or flaky materials, or organic

and injurious matter.

B. Coarse aggregates shall conform to the following gradation requirements.

Sieve Size (Square Mesh)	Percent Retained (By Weight)
2-1/2"	0
2"	0 - 20
1-1/2"	15 - 50
3/4"	60 - 80
No. 4	95 - 100

PART 3 - EXECUTION

3.01 GENERAL

A. To keep the street clean of mud generated by construction vehicles and equipment, Contractor shall provide stabilized construction exits at the construction site, staging, parking, storage, and/or disposal areas. Such erosion and sediment control system shall be constructed in accordance with the Detail - Stabilized Construction Exit attached hereto or shown on the Drawings, and any additional requirements shown on the Drawings and set out in this Section.

B. No clearing and grubbing or rough cutting, other than as specifically directed by the Owner to allow soil testing and surveying, shall be permitted until erosion and sedimentation control systems are in place.

C. Maintain existing erosion and sedimentation control systems located within the project site until acceptance of the project or until directed by the Owner to remove and discard the existing system.

D. Regularly inspect and repair or replace components of stabilized construction exists. Unless otherwise directed, maintain the erosion and sedimentation control systems until the project is accepted by the Owner. Remove erosion and sedimentation control systems promptly when directed by the Owner. Discard removed materials offsite.

E. Remove and dispose sediment deposits at the project designated spoil site. If a project spoil site is not designated on the Drawings, dispose of sediment offsite at location not in or adjacent to stream or floodplain. Off-site disposal will be the responsibility of the Contractor. Sediment to be placed at the project site should be spread evenly throughout the site, compacted and stabilized. Sediment shall not be allowed to flush into stream or drainage way. If sediment has been contaminated, it shall be disposed of in accordance with existing federal, state and local rules and regulations.

F. Equipment and vehicles of the Contractor, or on-site for his use, shall be prohibited from maneuvering on areas outside of the construction limits. Damages caused by construction traffic to erosion and sedimentation control systems shall be repaired immediately.

G. Conduct all construction operations under this Contract in conformance with the erosion control practices described in the Section 01560 - General Source Controls.

3.02 CONSTRUCTION METHODS

A. Provide stabilized exits, entrances, access roads, parking areas, and other on-site vehicle transportation routes where shown on the Drawings.

B. Vehicles leaving construction areas shall have their tires cleaned to remove sediment prior to entrance onto area roadways. When washing is needed to remove sediment, Contractor shall construct a truck washing area. Truck washing shall be done on stabilized areas, which drain into a drainage system protected by erosion and sediment control measures.

C. Details for stabilized construction exit are shown on the civil drawings. Construction of other stabilized areas shall be to the same requirements. Roadway width shall be at least 30 feet and shall be sufficient for all ingress and egress to the site. Furnish and place geotextile fabric as a permeable separator to prevent mixing of coarse aggregate with underlaying soil. Exposure of geotextile fabric to the elements between laydown and cover shall be a maximum of fourteen days to minimize damage potential.

D. Roads and parking areas shall be graded to provide sufficient drainage away from stabilized areas. Use sand bags, gravel, boards, or similar methods to prevent sediment from entering area roadways, receiving stream or storm water conveyance system.

E. The stabilized areas shall be inspected and maintained daily. Provide periodic top dressing with additional coarse aggregates to maintain the required depth. Repair and clean out damaged measures used to trap sediment. All sediment spilled, dropped, washed, or tracked onto area roadways shall be remove immediately.

F. The length of the stabilized area shall be as shown on the Detail or as shown on the Drawings, but not less than 50 feet in length. The thickness shall not be less than 8 inches. The width shall not be less than full width of all points of ingress or egress.

G. Stabilization for other areas shall have the same thickness, and width requirements as the stabilized construction exit, except where specified otherwise on the Drawings. The aggregate shall be a compacted limestone base material, 8 inches in thickness, with an application of emulsified asphalt. The emulsified asphalt material shall be reapplied periodically following any regrading of the limestone surface.

H. Stabilized area may be widened or lengthened to accommodate truck-washing area as required by the Contractor and approved by the Owner.

I. Alternative methods of construction, when preapproved by the Owner, may include the following.
   1. Cement Stabilized Soil - Compacted cement stabilized soil or other fill material in an application thickness of at least 8 inches.
   2. Wood Mats/Mud Mats - Oak or other hardwood timbers placed edge to edge and across support wooden beams which are placed on top of existing soil in an application thickness of at least 6 inches.
   3. Steel Mats - Perforated mats placed across perpendicular support members.

3.03 MEASUREMENT AND PAYMENT

A. No separate measurement or payment will be made for materials and labor performed under this Section. Include all costs in the lump sum price, or in the unit price for Storm Water Pollution Prevention Plan.

END OF SECTION 01 55 13

SECTION 01 55 13.10 – STABILIZED CONSTRUCTION ACCESS

PART 1 - GENERAL

1.1 SECTION INCLUDES

A. Installation of erosion and sediment control for stabilized construction access points used during construction and until final development of the site.

1.2 SUBMITTALS

A. Manufacturer's catalog sheets and other product data on geotextile fabric.
B. Sieve analysis of aggregates conforming to requirements of this Specification.

1.3 UNIT PRICES

A. Unless indicated in the Unit Price Schedule as a pay item, no separate payment will be made for work performed under this Section. Include cost of work performed under this Section in pay items for which this work is a component.
B. When indicated in the Unit Price Schedule, include stabilized exits under payment for Street Cleaning as Required by NPDES, including stabilized construction roads, parking areas, exits, and truck washing areas will include and be full compensation for all labor, equipment, materials, supervision, and all incidental expenses for construction of these items, complete in place, including, but not limited to, embankment and excavation, maintenance requirements, repair and replacement of damaged sections, removal of sediment deposits, redressing of aggregates and stones, cleaning of streets, and removal of erosion and sediment control systems at the end of construction.

1.4 REFERENCES

A. ASTM D 4632 - Standard Test Method for Grab Breaking Load and Elongation of Geotextile

PART 2 – PRODUCT

2.1 GEOTEXTILE FABRIC

A. Provide woven or nonwoven geotextile fabric made of either polypropylene, polyethylene, ethylene, or polyamide material.
B. Geotextile fabric shall have a minimum grab strength of 270 psi in any principal direction (ASTM D-4632), and the equivalent opening size between 50 and 140.
C. Both the geotextile and threads shall be resistant to chemical attack, mildew, and rot and shall contain ultraviolet ray inhibitors and stabilizers to provide a minimum of 6 months of expected usable life at a temperature range of 0°F to 120°F.
D. Representative Manufacturers: Mirafi, Inc., or equal.

2.2 COARSE AGGREGATES

A. Coarse aggregate shall consist of crushed stone, gravel, crushed blast furnace slag, or a combination of these materials. Aggregate shall be composed of clean, hard, durable materials free from adherent coatings, salt, alkali, dirt, clay, loam, shale, soft or flaky materials, or organic and injurious matter.
B. Coarse aggregates shall be 2" to 5" in size. No crushed concrete will be allowed.

PART 3 – EXECUTION

3.1 PREPARATION AND INSTALLATION

A. If necessary to keep the street clean of mud carried by construction vehicles and equipment, Contractor shall provide stabilized construction roads and exits at the construction, staging, parking, storage, and disposal areas. Such erosion and sediment controls shall be constructed in accordance with the requirements shown on the Drawings and specified in this Section.

B. No clearing and grubbing or rough cutting shall be permitted until erosion and sediment control systems are in place, other than as specifically directed by the Owner's Representative to allow soil testing and surveying.

C. Maintain existing erosion and sediment control systems located within the project site until acceptance of the project or until directed by the Owner's Representative to remove and discard the existing system.

D. Regularly inspect and repair or replace components of stabilized construction access points. Unless otherwise directed, maintain the stabilized construction roads and access points until the project is accepted by the Owner. Remove stabilized construction roads and access points promptly when directed by the Owner's Representative. Discard removed materials off site in accordance with the requirements of Division 1.

E. Remove sediment deposits and dispose of them at the designated spoil site for the project. If a project spoil site is not designated on the Drawings, dispose of sediment off site at location not in or adjacent to a stream or floodplain. Off-site disposal is the responsibility of the Contractor. Sediment to be placed at the project site should be spread evenly throughout the site, compacted and stabilized. Sediment shall not be allowed to flush into a stream or drainage way. If sediment has been contaminated, it shall be disposed of in accordance with existing federal, state, and local rules and regulations.

F. Equipment and vehicles shall be prohibited by the Contractor from maneuvering on areas outside of dedicated rights-of-way and easements for construction. Damage caused by construction traffic to erosion and sediment control systems shall be repaired immediately.

G. Conduct all construction operation under this Contract in conformance with the erosion control practices described in Division 1.

3.2 CONSTRUCTION METHODS

A. Provide stabilized access roads, subdivision roads, parking areas, and other on-site vehicle transportation routes where shown on Drawings.

B. Provide stabilized construction exits, and truck washing areas when approved by Owner's Representative, of the sizes and locations where shown on Drawings or as specified in this Section.

C. Vehicles leaving construction areas shall have their tires cleaned to remove sediment prior to entrance onto public right-of-way. When washing is needed to remove sediment, Contractor shall construct a truck washing area. Truck washing shall be done on stabilized areas which drain into a drainage system protected by erosion and sediment control measures.

D. Details for stabilized construction access points are shown on the Drawings. Construction of all other stabilized areas shall be to the same requirements. Roadway width shall be at least 14 feet for one-way traffic and 20 feet for two-way traffic and shall be sufficient for all ingress and egress. Furnish and place geotextile fabric as a permeable separator to prevent mixing of coarse aggregate with underlaying soil. Exposure of geotextile fabric to the elements between laydown and cover shall be a maximum of 14 days to minimize damage potential.

E. Roads and parking areas shall be graded to provide sufficient drainage away from stabilized areas. Use sandbags, gravel, boards, or similar methods to prevent sediment from entering public right-of-way, receiving stream or storm water conveyance system.

F. The stabilized areas shall be inspected and maintained daily. Provide periodic top dressing

with additional coarse aggregates to maintain the required depth. Repair and clean out damaged control measures used to trap sediment. All sediment spilled, dropped, washed, or tracked onto public right-of-way shall be removed immediately.

G. The length of the stabilized area shall be as shown on the Drawings, but not less than 50 feet. The thickness shall not be less than 8 inches. The width shall not be less than the full width of all points of ingress or regress.

H. Stabilization for other areas shall have the same coarse aggregate, thickness, and width requirements as the stabilized construction access points, except where shown otherwise on the Drawings.

I. Stabilized area may be widened or lengthened to accommodate truck washing area when authorized by Owner's Representative.

J. Alternative methods of construction may be utilized when shown on Drawings, or when approved by the Owner's Representative. These methods include the following:
   1. Cement-Stabilized Soil - Compacted cement-stabilized soil or other fill material in an application thickness of at least 8 inches.
   2. Wood Mats/Mud Mats - Oak or other hardwood timbers placed edge-to-edge and across support wooden beams which are placed on top of existing soil in an application thickness of at least 6 inches.
   3. Steel Mats - Perforated mats placed across perpendicular support members.

END OF SECTION 01 55 13.10

SECTION 01 55 26 – TRAFFIC CONTROL

PART 1 – GENERAL

1.1 SECTION INCLUDES

A. Requirements for signs, signals, control devices, traffic barriers, flares, lights and traffic signals; construction parking control, designated haul routes, and bridging of trenches and excavations.

B. Qualifications and requirements for use of flagmen.

1.2 MEASUREMENT AND PAYMENT

A. Unit Price Contracts.
   1. Traffic control and regulation. Payment for traffic control and regulation is on a lump sum basis. Include preparation and submittal of traffic control plan if different than shown on Drawings, and provision of traffic control devices, equipment, and personnel necessary to protect the Work and public. Payment will be based on Contractor's Schedule of Values for traffic control and regulation.
   2. Flagmen. Payment for flagmen is on a lump sum basis. Partial payments will be based on Contractor's Schedule of Values for flagmen.
   3. Refer to Division 1 for unit price procedures.

B. Stipulated Price Contracts. Include payment for work under this section in the total Stipulated Price.

1.3 REFERENCES

A. Texas Manual on Uniform Traffic Control Devices (TMUTCD).

B. Article 4413 (29bb), commonly referred to as Private Investigators and Private Security Agencies Act, and Article 2.12, Texas Code of Criminal Procedure.

1.4 SUBMITTALS

A. Conform to requirements of Division 1.

B. Traffic control plan:
   1. If using traffic control plan contained in the Contract without modification, submit a letter confirming use of the plan.
   2. If using a different traffic control plan, submit the plan for approval to the local Governing Jurisdiction, Owner and Engineer. The plan must conform to TMUTCD requirements and be sealed by a Registered Texas Professional Engineer. The contractor is responsible for obtaining approval from the Governing entity if using an alternate plan.

C. Submit copies of approved lane closure permits issued by all governmental authorities.

D. Submit Schedules of Values for traffic control plan and flagmen within 30 days following

Notice to Proceed.

E. Submit records verifying qualifications of Uniformed Peace Officers and Certified Flagmen proposed for use on the Work.

1.5 FLAGMEN

A. Use Uniformed Peace Officers and Certified Flagmen to control movement of vehicular and pedestrian traffic when construction operations encroach on public traffic lanes.

B. Uniformed Peace Officer: Individual employed full-time as a peace officer who receives separate compensation as a privately employed flagman. Private employment may be an employee-employer relationship or on an individual basis. Flagman may not be in the employ of another peace officer nor be a reserve peace officer.
   1. Uniformed Peace Officers may be:
      a. Sheriffs and their deputies;
      b. Constables and deputy constables;
      c. Marshals or police officers of an incorporated city, town or village; or
      d. As otherwise provided by Article 2.12, Code of Criminal Procedure.
   2. The Uniformed Peace Officer must be a full-time peace officer, must work a minimum average of 32 paid hours per week, and must be paid a rate not less than the prevailing minimum hourly wage rate set by the federal Wage and Hour Act. The individual must be entitled to vacation, holidays, and insurance and retirement benefits.

C. Certified Flagman: Individual who receives compensation as a flagman and meets the following qualifications:
   1. Formally trained and certified in traffic control procedures by the City's E. B. Cape Center.
   2. Speaks English. Ability to speak Spanish is desirable but not required.
   3. Paid for flagman duty at an hourly rate not less than the wage rate set for Rough Carpenter under the City of Houston's Wage Scale for Engineering Construction.

D. Certified Flagmen must wear a distinctive uniform, bright-colored vest, and be equipped with appropriate flagging and communication devices while at the Work site. They must also have in their possession while on duty, a proof of training identification card issued by the appropriate training institute.

PART 2 – PRODUCTS

2.1 SIGNS, SIGNALS, AND DEVICES

A. Comply with TMUTCD requirements.

B. Traffic cones and drums, flares and lights: Conform to local jurisdictions' requirements.

2.2 PORTABLE LOW PROFILE CONCRETE BARRIERS

A. The low profile concrete barrier is a patented design. Information concerning this barrier may be obtained from Texas Transportation Institute, Texas A&M University System, College Station, Texas 77843-3135, (409) 845-1712.

PART 3 – EXECUTION

3.1 PUBLIC ROADS

A. Submit requests forms for lane closure and sidewalk closure to the appropriate governmental authority at least three working days prior to need for blocking vehicular lanes or sidewalks. Do not block lanes or sidewalks without approved permits.

B. Follow laws and regulations of governing jurisdictions when using public roads. Pay for and obtain permits from jurisdiction before impeding traffic or closing lanes. Coordinate activities with Owner's Representative.

C. Give Owner's Representative one-week notice before implementing approved traffic control phases. Inform local businesses of impending traffic control activities.

D. Notify police department, fire department, METRO, and local schools, churches, and businesses in writing a minimum of five business days prior to beginning work.

E. Maintain 10-foot-wide all-weather lanes adjacent to the Work for emergency vehicle use. Keep all-weather lanes free of construction equipment and debris.

F. Do not to obstruct normal flow of traffic from 7:00 a.m. to 9:00 a.m. and 4:00 p.m. to 6:00 p.m. on designated major arterials or as directed by Owner's Representative.

G. Maintain local driveway access to residential and commercial properties adjacent to work areas at all times. Use all-weather materials approved by Owner's Representative to maintain temporary driveway access to commercial and residential driveways.

H. Keep streets entering and leaving job site free of excavated material, debris, and foreign material resulting from construction operations in compliance with applicable ordinances.

I. Remove existing signage and striping that conflict with construction activities or that may cause driver confusion.

J. Provide safe access for pedestrians along major cross streets.

K. Alternate closures of cross streets so that two adjacent cross streets are not closed simultaneously.

L. Do not close more than two consecutive esplanade openings at a time without prior approval from Owner's Representative.

3.2 CONSTRUCTION PARKING CONTROL

A. Control vehicular parking to prevent interference with public traffic and parking, access by emergency vehicles, and the Owner's operations.

B. Monitor parking of construction personnel's vehicles in existing facilities. Maintain vehicular access to and through parking areas.

C. Prevent parking on or adjacent to access roads or in non-designated areas.

3.3 FLARES AND LIGHTS

A. Provide flares and lights during hours of low visibility to delineate traffic lanes and to guide traffic.

3.4 HAUL ROUTES

A. Utilize haul routes designated by authorities or shown on Drawings for construction traffic.

B. Confine construction traffic to designated haul routes.

C. Provide traffic control at critical areas of haul routes to regulate traffic and minimize interference with public traffic.

3.5 TRAFFIC SIGNS AND SIGNALS

A. Construct necessary traffic control devices for temporary signals required to complete the Work including loop detectors, traffic signal conduits, traffic signal wiring and crosswalk signals. Notify the governmental agency having jurisdiction a minimum of 60 days in advance of need for control boxes and switchgear. The Contractor will pay for all necessary service, programming or adjustments, to signal boxes and switchgear if required during construction.

B. Install and operate traffic control signals to direct and maintain orderly traffic flow in areas under Contractor's control affected by Contractor's operations. Post notices, signs and traffic controls before moving into next phase of traffic control.

C. Relocate traffic signs and signals as the Work progresses to maintain effective traffic control.

D. Unless otherwise approved by Owner’s Representative, provide driveway signs with name of business that can be accessed from each crossover. Use two signs for each crossover.

E. Replace existing traffic control devices in Project area.

F. Owner’s Representative may direct Contractor to make minor adjustments to traffic control signage to eliminate driver confusion and maintain orderly traffic flow during construction at no additional cost to the Owner.

3.6 BRIDGING TRENCHES AND EXCAVATIONS

A. When necessary, construct bridges over trenches and excavation to permit an unobstructed flow of traffic across construction areas and major drives. Use steel plates of sufficient thickness to support H-20 loading and install to operate with minimum noise.

B. Shore trench or excavation to support bridge and traffic.

C. Secure bridging against displacement with adjustable cleats, angles, bolts or other devices when:
   1. Bridging is placed over existing bus routes,
   2. More than five percent of daily traffic is comprised of commercial or truck traffic,
   3. More than two separate plates are used for bridging, and
   4. When bridge is to be used for more than five consecutive days.

D. Extend steel plates used for bridging a minimum of 1 foot beyond edges of trench or excavation. Use temporary paving materials such as premix to feather edges of plates to minimize wheel impact on secured bridging.

3.7 REMOVAL

A. Remove equipment and devices when no longer required.

B. Repair damage caused by installation.

C. Remove post settings to a depth of 2 feet.

3.8 TRAFFIC CONTROL, REGULATION AND DIRECTION

A. Use Flagmen to control, regulate and direct an even flow and movement of vehicular and pedestrian traffic, for periods of time as may be required to provide for public safety and convenience, where:
   1. Multi-lane vehicular traffic must be diverted into single lane vehicular traffic,
   2. Vehicular traffic must change lanes abruptly,
   3. Construction equipment must enter or cross vehicular traffic lanes and walks,
   4. Construction equipment may intermittently encroach on vehicular traffic lanes and unprotected walks and crosswalks,
   5. Traffic regulation is needed due to rerouting of vehicular traffic around the Work site, and
   6. Where construction activities might affect public safety and convenience.

B. Use of Flagmen to assist in the regulation of traffic flow and movement does not relieve Contractor of responsibility to take other means necessary to protect the Work and public.

3.9 INSTALLATION STANDARDS

A. Place temporary pavement for single lane closures, in accordance with TMUTCD.

B. Reinstall temporary and permanent pavement markings as approved by Owner's Representative. When weather conditions do not allow application according to manufacturer's requirements, alternate markings may be considered. Submit proposed alternate to Owner's Representative for approval prior to installation. No additional payment will be made for use of alternate markings.

3.10 MAINTENANCE OF EQUIPMENT AND MATERIAL

A. Submit name, address and telephone number of individual designated to be responsible for maintenance of traffic handling at construction site to Owner's Representative. Individual must be accessible at all times to immediately correct deficiencies in equipment and materials used to handle traffic including missing, damaged, or obscured signs, drums, barricades, or pavement markings.

B. Inspect signs, barricades, drums, lamps and temporary pavement markings daily to verify that they are visible, in good working order, and conform with traffic handling plans as approved by Owner's Representative. Immediately repair, clean, relocate, realign, or replace equipment or materials that are not in compliance.

C. Keep equipment and materials, signs and pavement markings, clean and free of dust, dirt, grime, oil, mud, or debris.

D. Obtain approval of Owner's Representative to reuse damaged or vandalized signs, drums, and barricades.

END OF SECTION 01 55 26

SECTION 01 57 00 - SOURCE CONTROL

PART 1 - GENERAL

1.01 SCOPE

A. This Section describes erosion and sedimentation control and other control related practices, which shall be utilized during construction activities.

1.02 RELATED DOCUMENTS

A. Drawings and general provisions of Contract, including General Conditions, Special Conditions, and Division 1 Specification Sections, apply to this Section.

PART 2 – PRODUCTS - NOT USED

PART 3 - EXECUTION

3.01 GENERAL

A. No clearing and grubbing or rough cutting shall be permitted until erosion and sedimentation control systems are in place.

B. Equipment and vehicles shall be prohibited by the Contractor from maneuvering on areas outside of dedicated construction area. Damages caused by construction traffic or others to erosion and sedimentation control systems shall be repaired immediately by the Contractor.

C. The Contractor shall be responsible for collecting, storing, hauling, and disposing of spoils, silt, and waste materials as specified on the Drawings and in this or other Technical Specifications and in compliance with applicable federal, state, and local rules and regulations.

D. Contractor shall conduct all construction operation under this Contract in conformance with the erosion control practices described on the Drawings, the Storm Water Pollution Prevention Plan and this Section.

E. The Contractor shall install, maintain, and inspect erosion and sediment control measures and practices as specified on the Drawings and in this and other Technical Specifications.

F. Contractor shall employ protective measures to avoid damage to existing trees to be retained on the project site.

3.02 TOPSOIL PLACEMENT FOR EROSION AND SEDIMENTATION CONTROL SYSTEMS

A. When topsoil is called for as a component of another Section, the Contractor shall conduct erosion control practices described in this Section during topsoil placement operation.

B. When placing topsoil, maintain erosion and sedimentation control systems.

C. Maintain grades, which have been previously established on areas to receive topsoil.

D. After the areas to receive topsoil have been brought to grade, and immediately prior to dumping and spreading the topsoil, the subgrade shall be loosened by discing or by scarifying to a depth of at least two (2) inches to permit bonding of the topsoil to the subsoil.

E. No sod or seed shall be placed on soil, which has been treated with soil sterilants until sufficient time has elapsed to permit dissipation of toxic materials.

3.03 DUST CONTROL

A. Dust control methods shall be implemented to control dust creation and movement on construction sites and roads and to prevent airborne sediment from reaching receiving stream or storm water conveyance system, to reduce on and offsite damage, to prevent health hazards, and to improve traffic safety.

B. Contractor shall control dust blowing by utilizing one or more of the following methods:

1. Mulches bound with chemical binders.
2. Temporary vegetative cover.
3. Spray-on adhesives on mineral soils when not used by traffic.
4. Tillage to roughen surface and bring clods to the surface.
5. Irrigation by water sprinkling.
6. Barriers using solid board fences, snow fences, burlap fences, crate walls, bales of hay, or similar materials.

C. Dust control methods shall be implemented immediately whenever dust can be observed blowing on the project site.

D. Owner's temporary facilities shall be protected from debris and dust during entirety of construction activities. Installation of 6' high woven UV stabilized Polyethylene fabric fence with brass grommets shall be installed along fence.

3.04 KEEPING STREETS CLEAN

A. Contractor shall keep the streets clean of construction debris, dirt, and mud generated by construction vehicles and equipment. If necessary to keep the streets clean, Contractor shall provide stabilized construction exits at construction, staging, storage, and disposal areas. A vehicle/equipment wash area (stabilized with coarse aggregate) may be installed adjacent to the location of stabilized construction exit, as needed. Wash water shall be released into a drainage swale or inlet protected by erosion and sediment control measures.

B. In lieu of or in addition to stabilized construction exits, Contractor shall shovel and/or sweep the pavement to the extent necessary to keep the street clean. Water hosing or sweeping of debris and mud off of the street into adjacent areas is not

allowed.

3.05 EQUIPMENT MAINTENANCE AND REPAIR

A. Maintenance and repair of construction machinery and equipment shall be confined to areas specifically designated for that purpose. Such designated areas shall be located and designed so that oils, gasoline, grease, solvents, and other potential pollutants cannot be washed into receiving streams or storm water conveyance systems. These areas shall be provided with adequate waste disposal receptacles for liquid as well as solid waste. Maintenance areas shall be inspected and cleaned daily.

B. On the construction site where designated equipment maintenance areas are not feasible, care shall be taken during each individual repair or maintenance operation to prevent potential pollutants from becoming available to be washed into streams or conveyance systems. Temporary waste disposal receptacles shall be provided.

3.06 WASTE COLLECTION AND DISPOSAL

A. Contractor shall formulate and implement a plan for the collection and disposal of waste materials on the construction site. The plan must designate locations for trash and waste receptacles and establish a collection schedule. Methods for ultimate disposal of waste shall be specified and carried out in accordance with applicable local, state and federal health and safety regulations. Special provisions shall be made for the collection and disposal of liquid wastes and toxic or hazardous materials.

B. Receptacles and other waste collection areas shall be kept neat and orderly to the extent possible. Waste shall not be allowed to overflow its container or accumulate for excessively long periods of time. Trash collection points shall be located where they will least likely be affected by concentrated storm water runoff.

3.07 WASHING AREAS

A. Vehicles such as concrete or dump trucks and other construction equipment shall not be washed at locations where the runoff will flow into a watercourse or storm water conveyance system. Special areas shall be designated for washing vehicles. These areas should be located where the wash water will spread out and evaporate or infiltrate directly into the ground, or where the runoff can be collected in a temporary holding or seepage basin. Wash areas shall have gravel or rock bases to minimize mud generation. These areas shall be completely cleaned up, have waste remains hauled off, and be stabilized and seeded after the area is no longer required.

3.08 STORAGE OF CONSTRUCTION MATERIALS, CHEMICALS, ETC.

A. Sites where chemicals, cements, solvents, paints, or other potential water pollutants are to be stored, shall be isolated in areas where they will not cause runoff pollution.

B. Toxic chemicals and materials, such as pesticides, paints, and acids shall be stored in accordance with manufacturers' guidelines. Groundwater resources shall be protected from leaching by placing a plastic mat, packed clay or other impervious materials on any areas where toxic liquids are to be opened and stored.

3.09 DEMOLITION AREAS

A. Demolition work, which generates large amounts of dust, shall be provided with dust control techniques to limit the transport of the airborne pollutants. However, water or slurry used to control dust shall not be allowed to run directly into watercourses or storm water conveyance systems. Methods of ultimate disposal of these materials shall be carried out in accordance with applicable local, state and federal health and safety regulations.

3.10 SANITARY FACILITIES

A. The construction site must be provided with adequate sanitary facilities for workers in accordance with Division 1 and applicable health regulations.

3.11 PESTICIDES

A. The use of pesticides shall be approved by the Owner prior to application. A one-week notice will be required of the Contractor.

B. Pesticides used during construction shall be stored and used in accordance with manufacturers' guidelines and with local, state and federal regulations. Overuse of pesticides, which could generate contaminated runoff, shall be avoided and great care shall be taken to prevent accidental spillage. Pesticide containers shall never be washed in or near flowing streams or storm water conveyance systems.

3.12 PROTECTION OF TREES IN CONSTRUCTION AREAS

A. Heavy equipment, vehicular traffic, and stockpiles of construction materials, including topsoil, are not permitted within the dripline of any tree to be retained. Contractor shall avoid all contact with trees to be retained unless otherwise directed by the Owner or required by the work under this Contract.

B. Specimen trees shown on the Drawings shall be boxed or fenced. When called for in the Drawings, tunnel under the root system for the installation of utility lines.

C. Tree trunks, exposed roots, and limbs of the trees designated to be retained, which are damaged during construction operations, will be cared for as prescribed by a forester or licensed tree expert at the expense of the Contractor.

3.13 MEASUREMENT AND PAYMENT

A. No separate measurement or payment will be made for materials and labor performed under this section. Include all costs in the lump sum price, or in the unit price for Storm Water Pollution Prevention Plan.

END OF SECTION 01 57 00

SECTION 01 57 10 – TPDES REQUIREMENTS

PART 1 – GENERAL

1.1 SECTION INCLUDES

A. Documentation to be prepared and signed by Contractor before conducting construction operations, in accordance with the Texas Pollutant Discharge Elimination System (TPDES) Construction General Permit Number TXR 150000 (the Construction General Permit).

B. Implementation, maintenance, inspection, and termination of storm water pollution prevention control measures including, but not limited to, erosion and sediment controls, storm water management plans, waste collection and disposal, off-site vehicle tracking, and other appropriate practices shown on the Drawings or specified elsewhere in the Contract.

C. Review of the Storm Water Pollution Prevention Plan (SWP3) implementation in a meeting with the Owner's Representative prior to start of construction.

1.2 DEFINITIONS

A. Commencement of Construction Activities: The exposure of soil resulting from activities such as clearing, grading, and excavating.

B. Large Construction Activity: Project that:
   1. Disturbs five acres or more, or
   2. Disturbs less than five acres but is part of a larger common plan of development that will disturb five acres or more of land.

C. Small Construction Activity: Project that:
   1. Disturbs one or more acres but less than five acres, or
   2. Disturbs less than one acre but is part of a larger common plan of development that will ultimately disturb one or more acres but less than five acres.

D. TPDES Operator:
   1. The person or persons who have day-to-day operational control of the construction activities which are necessary to ensure compliance with the SWP3 for the site or other Construction General Permit conditions.

PART 2 - PRODUCTS Not Used

PART 3 – EXECUTION

3.1 SITE SPECIFIC STORM WATER POLLUTION PREVENTION PLAN (SWP3)

A. Prepare a SWP3 following Part III of the Construction General Permit and the applicable local code. If conflicts exist between the Construction General Permit and the local regulations, the more stringent requirements will apply.

B. Update or revise the SWP3 as needed during the construction following Part III, Section E of the Construction General Permit.

C. Submit the SWP3 and any updates or revisions to the Owner's Representative for review

and address comments prior to commencing, or continuing, construction activities.

3.2 NOTICE OF INTENT FOR LARGE CONSTRUCTION ACTIVITY

A. Fill out, sign, and date TCEQ Form 20022 Notice of Intent (NOI) for Storm Water Discharges Associated with Construction Activity under the TPDES Construction General Permit (TXR 150000). Contractor shall provide NOI forms for both himself and Owner.

B. Transmit the signed Contractor's copy of TCEQ Form 20022, along with a check for the required fee, made out to Texas Commission on Environmental Quality.

C. Submission of the Notice of Intent form by the Contractor to TCEQ is required a minimum of fourteen days before Commencement of Construction Activities.

3.3 CONSTRUCTION SITE NOTICE FOR SMALL CONSTRUCTION ACTIVITY

A. Fill out, sign, and date the Construction Site Notice, Attachment 2 to TPDES General Permit TXR 150000, "Construction Site Notice."

B. Transmit the signed Construction Site Notice to the Engineer and Owner at least seven days prior to Commencement of Construction Activity.

3.4 CERTIFICATION REQUIREMENTS

A. Conduct inspections in accordance with TCEQ requirements. Ensure persons or firms responsible for maintenance and inspection of erosion and sediment control measures read, fill out, sign, and date the Erosion Control Contractor's Certification for Inspection and Maintenance. Use the EPA NPDES Construction Inspection Form.

3.5 RETENTION OF RECORDS

A. Keep a copy of this document and the SWP3 in a readily accessible location at the construction site from Commencement of Construction Activity until submission of the Notice of Termination (NOT) for Storm Water Discharges Associated with Construction Activity under TPDES Construction General Permit (TXR 150000). Contractors with day- to-day operational control over SWP3 implementation shall have a copy of the SWP3 available at a central location, on-site, for the use of all operators and those identified as having responsibilities under the SWP3. Upon submission of the NOT, submit all required forms and a copy of the SWP3 with all revisions to the Owner's Representative.

3.6 REQUIRED NOTICES

A. Post the following notices from effective date of the SWP3 until date of final site stabilization as defined in the Construction General Permit:
   1. Post the TPDES permit number for Large Construction Activity or a signed TCEQ Construction Site Notice for Small Construction Activity. A signed copy of the Contractor's NOI must also be posted.
   2. Post notices near the main entrance of the construction site in a prominent place for public viewing. Post name and telephone number of Contractor's local contact person, brief project description and location of the SWP3.
      a. If posting near a main entrance is not feasible due to safety concerns, coordinate posting of notice with the Owner's Representative to conform to requirements of the Construction General Permit.
      b. If Project is a linear construction project (e.g.: road, utilities, etc.), post

notice in a publicly accessible location near active construction. Move notice as necessary.

3. Post a notice to equipment and vehicles operators, instructing them to stop, check, and clean tires of debris and mud before driving onto traffic lanes. Post at each stabilized construction exit area.
4. Post a notice of waste disposal procedures in a readily visible location on site.

3.7 ON-SITE WASTE MATERIAL STORAGE

A. On-site waste material storage shall be self-contained and shall satisfy appropriate local, state, and federal rules and regulations.

B. Prepare list of waste material to be stored on-site. Update list as necessary to include up to- date information. Keep a copy of updated list with the SWP3.

C. Prepare description of controls to reduce pollutants generated from on-site storage. Include storage practices necessary to minimize exposure of materials to storm water, and spill prevention and response measures consistent with best management practices. Keep a copy of the description with the SWP3.

3.8 NOTICE OF TERMINATION

A. Submit a NOT to TCEQ and the Engineer within 30 days after:
   1. Final stabilization has been achieved on all portions of the site that are the responsibility of the Contractor; or
   2. Another operator has assumed control over all areas of the site that have not been stabilized; and
   3. All silt fences and other temporary erosion controls have either been removed, scheduled to be removed as defined in the SWP3, or transferred to a new operator if the new operator has sought permit coverage.

END OF SECTION 01 57 10

SECTION 01 57 13 - FILTER FABRIC FENCE

PART 1 - GENERAL

1.01 SCOPE

A. This Section describes the installation of erosion and sedimentation control filter fabric fences (FFF) utilized during construction. The filter fabric fences are to be used to contain pollutants from overland flow. This practice shall not be used in channelized flow areas.

1.02 RELATED DOCUMENTS

A. Drawings and general provisions of Contract, including General Conditions, Special Conditions, and Division 1 Specification Sections, apply to this Section.

1.03 REFERENCE STANDARDS

A. The publications listed below forms a part of this Specification to the extent referenced. The publications are referred to in the text by basic designation only.

B. American Society for Testing and Materials (ASTM).

C. ASTM D-3786 - Standard Test Method for Hydraulic Bursting Strength of Knitted Goods and Nonwoven Fabrics - Diaphragm Bursting Strength Tester Method.

D. ASTM D-4632 - Standard Test Method for Breaking Load and Elongation of Geotextile (Grab Method).

1.04 SUBMITTALS

A. Manufacturer's catalogue sheets and other pertinent information on geotextile fabric.

PART 2 - PRODUCTS

2.01 FILTER FABRIC

A. Provide woven or nonwoven geotextile filter fabric made of either polypropylene, polyethylene, ethylene, or polyamide material. Geotextile fabric shall have a grab strength of 100 psi in any principal direction (ASTM D-4632), Mullen burst strength exceeding 200 psi (ASTM D-3786), and the equivalent opening size between 50 and 140, with the appropriate opening size to be selected based on the grain size characteristics of the disturbed soil. Filter fabric material shall contain ultraviolet ray inhibitors and stabilizers to provide a minimum of six (6) months of expected usable construction life at a temperature range of 0 degrees F to 120 degrees F. Representative Manufacturers: Mirafi Inc. or preapproved equivalent.

PART 3 - EXECUTION

3.01 GENERAL

A. Provide erosion and sedimentation control systems. Such systems shall be of the type indicated and shall be constructed in accordance with the requirements set out in this Section.

B. No clearing and grubbing or rough cutting shall be permitted until erosion and sedimentation control systems are in place.

C. Regularly inspect and repair or replace components of all erosion and sedimentation control systems as specified for each type of system. Unless otherwise directed, maintain the erosion and sedimentation control systems until the project area stabilization is accepted by the Owner. Remove erosion and sedimentation control systems promptly when directed by the Owner. Discard removed materials as required by these Specifications.

D. Remove and dispose sediment deposits at the project designated spoil site. Sediment shall not be allowed to flush into stream or drainage way. If sediment has been contaminated, it shall be disposed of in accordance with existing federal, state and local regulations.

E. Equipment and vehicles shall be prohibited by the Contractor from maneuvering on areas outside of construction limits. Damages caused by construction traffic to erosion and sedimentation control systems shall be repaired immediately.

F. Contractor shall employ protective measures described in Section 01 57 00- General Source Controls to avoid damage to existing trees to be retained on the project site. Conduct all construction operations under this Contract in conformance with the erosion control practices described in that Section

3.02 CONSTRUCTION METHODS

A. Filter fabric fence systems shall be installed at work perimeter in such a manner that surface runoff will percolate through the system in sheet flow fashion and allow sediment to be retained and accumulated.

B. Attach the filter fabric to 1 inch by 2 inch wooden stakes spaced a maximum of 3 feet apart and embedded in the ground a minimum of 1 foot. If factory preassembled fence with support netting is used, spacing of the post may be increased to 8 feet maximum. The wooden stakes shall be installed at a slight angle toward the source of anticipated runoff.

C. Trench in the toe of the filter fabric fence with a spade or mechanical trencher so that the downward face of the trench is flat and perpendicular to the direction of flow or for V-trench configuration as shown on the Detail. Lay filter fabric along the edges of the trench. Backfill and compact trench.

D. Filter fabric shall have a minimum height of 18 inches and a maximum height of 36 inches above the natural ground

E. The filter fabric should be provided in continuous rolls and cut to the length of the Silt Fence to minimize the use of joints. When joints are necessary, the fabric should be spliced together only at a support post with a minimum 6 inch overlap, and sealed securely

F. Inspect sediment filter fabric fence systems after each rainfall, daily during periods of prolonged rainfall, and at a minimum once a week. Repair or replace damaged section immediately to

restore the requirements of this Section. Remove sediment deposits when silt reaches one-third of the height of the fence in depth or 6 inches, whichever is less.

3.03 MEASUREMENT AND PAYMENT

A. No separate measurement or payment will be made for materials and labor performed under this section. Include all costs in the lump sum price, or in the unit price for Storm Water Pollution Prevention Plan.

END SECTION 01 57 13

SECTION 01 57 19 – CONTROL OF GROUND & SURFACE WATER

PART 1 – GENERAL

1.1 SECTION INCLUDES

A. Dewatering, depressurizing, draining, and maintaining trenches, shaft excavations, structural excavations and foundation beds in stable condition, and controlling ground water conditions for tunnel excavations.

B. Protecting work against surface runoff and rising floodwaters.

C. Trapping suspended sediment in the discharge form the surface and ground water control systems.

PART 2 - MEASUREMENT AND PAYMENT

2.1 UNIT PRICES

A. Measurement for control of ground water, if included in Bid Form, will be on either a lump sum basis or a linear foot basis for continuous installations of well points, eductor wells, or deep wells.

B. If not included in Bid Form, include the cost to control ground water in unit price for work requiring such controls.

C. No separate payment will be made for control of surface water. Include cost to control surface water in unit price for work requiring controls.

D. Follow Division 1 for unit price procedures.

E. Stipulated Price (Lump Sum) Contract. If the Contract is a Stipulated Price Contract, include payment for work under this section in the total Stipulated Price.

2.2 REFERENCES

A. ASTM D 698 - Standard Test Methods for Laboratory Compaction of Soils Using Standard Effort (12,400 ft-lbf/ft3 (600kN-m/m3).

B. Federal Regulations, 29 CFR Part 1926, Standards-Excavation, Occupational Safety and Health Administration (OSHA).

C. Storm Water Management Handbook for Construction Activities prepared by City of Houston, Harris County and Harris County Flood Control District.

2.3 DEFINITIONS

A. Ground water control system: system used to dewater and depressurize water-bearing soil layers.
   1. Dewatering: lowering the water table and intercepting seepage that would otherwise

emerge from slopes or bottoms of excavations, or into tunnels and shafts; and disposing of removed water. Intent of dewatering is to increase stability of tunnel excavations and excavated slopes, prevent dislocation of material from slopes or bottoms of excavations, reduce lateral loads on sheeting and bracing, improve excavating and hauling characteristics of excavated material, prevent failure or heaving of bottom of excavations, and to provide suitable conditions for placement of backfill materials and construction of structures and other installations.

2. Depressurization: includes reduction in piezometric pressure within strata not controlled by dewatering alone, necessary to prevent failure or heaving of excavation bottom or instability of tunnel excavations.

B. Excavation drainage: includes keeping excavations free of surface and seepage water.

C. Surface drainage: includes use of temporary drainage ditches and dikes and installation of temporary culverts and sump pumps with discharge lines necessary to protect Work from any source of surface water.

D. Monitoring facilities for ground water control system: includes piezometers, monitoring wells and flow meters for observing and recording flow rates.

2.4 PERFORMANCE REQUIREMENTS

A. Conduct subsurface investigations to identify groundwater conditions and to provide parameters for design, installation, and operation of groundwater control systems. Submit proposed method and spacing of readings for review prior to obtaining water level readings.

B. Design ground water control system, compatible with requirements of Federal Regulations 29 CFR Part 1926 and Division 2 to produce following results:
1. Effectively reduce hydrostatic pressure affecting:
   a. Excavations.
   b. Tunnel excavation, face stability or seepage into tunnels.
2. Develop substantially dry and stable subgrade for subsequent construction operations.
3. Preclude damage to adjacent properties, buildings, structures, utilities, installed facilities and other work.
4. Prevent loss of fines, seepage, boils, quick condition, or softening of foundation strata.
5. Maintain stability of sides and bottom of excavations.

C. Provide ground water control systems that include single-stage or multiple-stage well point systems, eductor and ejector-type systems, deep wells, or combinations of these equipment types.

D. Provide drainage of seepage water and surface water, as well as water from other sources entering excavation. Excavation drainage may include placement of drainage materials, crushed stone and filter fabric, together with sump pumping.

E. Provide ditches, berms, pumps and other methods necessary to divert and drain surface water from excavation and other work areas.

F. Locate ground water control and drainage systems so as not to interfere with utilities, construction operations, adjacent properties, or adjacent water wells.

G. Assume sole responsibility for ground water control systems and for any loss or damage resulting from partial or complete failure of protective measures and settlement or resultant damage caused by ground water control operations. Modify ground water control systems or operations if they cause or threaten to cause damage to new construction, existing site improvements, adjacent property, adjacent water wells, or potentially contaminated areas.

Repair damage caused by ground water control systems or resulting from failure of system to protect property as required.

H. Install an adequate number of piezometers installed at proper locations and depths, necessary to provide meaningful observations of conditions affecting excavation, adjacent structures and water wells.

I. Install environmental monitoring wells at proper locations and depths necessary to provide adequate observations of hydrostatic conditions and possible contaminant transport from contamination sources into work area or ground water control system.

2.5 SUBMITTALS

A. Conform to requirements of Division 1.

B. Submit Ground Water and Surface Water Control Plan for review by Owner's Representative prior to start of excavation work. Include the following:
1. Results of subsurface investigations and description of extent and characteristics of water bearing layers subject to ground water control.
2. Names of equipment Suppliers and installation Subcontractors.
3. Description of proposed ground water control systems indicating arrangement, location, depth and capacities of system components, installation details and criteria and operation and maintenance procedures.
4. Description of proposed monitoring facilities indicating depths and locations of piezometers and monitoring wells, monitoring installation details and criteria, type of equipment and instrumentation with pertinent data and characteristics.
5. Description of proposed filters including types, sizes, capacities and manufacturer's application recommendations.
6. Design calculations demonstrating adequacy of proposed systems for intended applications. Define potential area of influence of ground water control operation near contaminated areas.
7. Operating requirements, including piezometric control elevations for dewatering and depressurization.
8. Excavation drainage methods including typical drainage layers, sump pump application and other means.
9. Surface water control and drainage installations.
10. Proposed methods and locations for disposing of removed water.

C. Submit following records upon completion of initial installation:
1. Installation and development reports for well points, eductors, and deep wells.
2. Installation reports and baseline readings for piezometers and monitoring wells.
3. Baseline analytical test data of water from monitoring wells.
4. Initial flow rates.

D. Submit the following records weekly during control of ground and surface water operations:
1. Records of flow rates and piezometric elevations obtained during monitoring of dewatering and depressurization. Refer to Paragraph 3.02, Requirements for Eductor, Well Points, or Deep Wells.
2. Maintenance records for ground water control installations, piezometers and monitoring wells.

2.6 ENVIRONMENTAL REQUIREMENTS

A. Comply with requirements of agencies having jurisdiction.

B. Comply with Texas Commission on Environmental Quality regulations and Texas Water Well Drillers Association for development, drilling, and abandonment of wells used in dewatering system.

C. Obtain necessary permits from agencies with jurisdiction over use of groundwater and matters affecting well installation, water discharge, and use of existing storm drains and natural water sources. Since review and permitting process may be lengthy, take early action to obtain required approvals.

D. Monitor ground water discharge for contamination while performing pumping in vicinity of potentially contaminated sites.

PART 3 – PRODUCTS

3.1 EQUIPMENT AND MATERIALS

A. Select equipment and materials necessary to achieve desired results for dewatering. Selected equipment and materials are subject to review by Owner's Representative through submittals required in Paragraph 1.06, Submittals.

B. Use experienced contractors, regularly engaged in ground water control system design, installation, and operation, to furnish and install and operate eductors, well points, or deep wells, when needed.

C. Maintain equipment in good repair and operating condition.

D. Keep sufficient standby equipment and materials available to ensure continuous operation, where required.

E. Portable Sediment Tank System: Standard 55-gallon steel or plastic drums, free of hazardous material contamination.

1. Shop or field fabricate tanks in series with main inlet pipe, inter-tank pipes and discharge pipes, using quantities sufficient to collect sediments from discharge water.

PART 4 – EXECUTION

4.1 GROUND WATER CONTROL

A. Perform necessary subsurface investigation to identify water bearing layers, piezometric pressures and soil parameters for design and installation of ground water control systems. Perform pump tests, if necessary to determine draw down characteristics. Present results in the Ground Water and Surface Water Control Plan submittal.

B. Provide labor, material, equipment, techniques and methods to lower, control and handle ground water in manner compatible with construction methods and site conditions. Monitor effectiveness of installed system and its effect on adjacent property.

C. Install, operate, and maintain ground water control systems in accordance with the Ground Water and Surface Water Control Plan. Notify Owner's Representative in writing of changes made to accommodate field conditions and changes to Work. Provide revised drawings and calculations with notification.

D. Provide continuous system operation, including nights, weekends, and holidays. Arrange appropriate backup if electrical power is primary energy source for dewatering system.

E. Monitor operations to verify systems lower ground water piezometric levels at rate required to maintain dry excavation resulting in stable subgrade for subsequent construction operations.

F. Depressurize zones where hydrostatic pressures in confined water bearing layers exist below excavations to eliminate risk of uplift or other instability of excavation or installed works. Define allowable piezometric elevations in the Ground Water and Surface Water Control Plan.

G. Removal of ground water control installations.
1. Remove pumping system components and piping when ground water control is no longer required.
2. Remove piezometers, including piezometers installed during design phase investigations and left for Contractor's use, upon completion of testing, as required in accordance with Part 3 of applicable specification.
3. Remove monitoring wells when directed by Owner's Representative.
4. Grout abandoned well and piezometer holes. Fill piping that is not removed with cement-bentonite grout or cement-sand grout.

H. During backfilling, maintain water level a minimum of 5 feet below prevailing level of backfill. Do not allow the water level to cause uplift pressures in excess of 80 percent of downward pressure produced by weight of structure or backfill in place. Do not allow water levels to rise into cement-stabilized sand until at least 48 hour after placement.

I. Provide uniform pipe diameter for each pipe drain run constructed for dewatering. Remove pipe drains when no longer required. If pipe removal is impractical, grout connections at 50- foot intervals and fill pipe with cement-bentonite grout or cement-sand grout after removal from service.

J. The extent of ground water control for structures with permanent perforated underground drainage systems may be reduced, for units designed to withstand hydrostatic uplift pressure. Provide a means to drain affected portions of underground systems, including standby equipment. Maintain drainage systems during construction operations.

K. Remove systems upon completion of construction or when dewatering and control of surface or ground water is no longer required.

L. Compact backfill to not less than 95 percent of maximum dry density in accordance with ASTM D 698.

M. Foundation Slab: Maintain saturation line at least 3 feet below lowest elevations where concrete is to be placed. Drain foundations in areas where concrete is to be placed before placing reinforcing steel. Keep free from water for 3 days after concrete is placed.

4.2 REQUIREMENTS FOR EDUCTOR, WELL POINTS, OR DEEP WELLS

A. For above ground piping in ground water control system, include a 12-inch minimum length of clear, transparent piping between each eductor well or well point and discharge header to allow visual monitoring of discharge from each installation.

B. Install sufficient piezometers or monitoring wells to show that trench or shaft excavations in water bearing materials are pre-drained prior to excavation. Provide separate piezometers for monitoring of dewatering and for monitoring of depressurization. Install piezometers and monitoring wells for tunneling as appropriate for selected method of work.

C. Install piezometers or monitoring wells at least one week in advance of the start of associated excavation.

D. Dewatering may be omitted for portions of under drains or other excavations, where auger borings and piezometers or monitoring wells show that soil is pre-drained by existing systems and that ground water control plan criteria are satisfied.

E. Replace installations that produce noticeable amounts of sediments after development.

F. Provide additional ground water control installations, or change method of control if, ground water control plan does not provide satisfactory results based on performance criteria defined by plan and by specifications. Submit revised plan according to Paragraph 1.6B.

4.3 SEDIMENT TRAPS

A. Install sediment tank as shown on approved plan.

B. Inspect daily and clean out tank when one-third of sediment tank is filled with sediment.

4.4 SEDIMENT SUMP PIT

A. Install sediment sump pits as shown on approved plan.

B. Construct standpipe by perforating 12 inch to 24-inch diameter corrugated metal or PVC pipe.

C. Extend standpipe 12 inches to 18 inches above lip of pit.

D. Convey discharge of water pumped from standpipe to sediment trapping device.

E. Fill sites of sump pits, compact to density of surrounding soil and stabilize surface when construction is complete.

4.5 EXCAVATION DRAINAGE

A. Use excavation drainage methods if well-drained conditions can be achieved. Excavation drainage may consist of layers of crushed stone and filter fabric, and sump pumping, in combination with sufficient ground water control wells to maintain stable excavation and backfill conditions.

4.6 MAINTENANCE AND OBSERVATION

A. Conduct daily maintenance and observation of piezometers or monitoring wells while ground water control installations or excavation drainage is operating at the site, or water is seeping into tunnels, and maintain systems in good operating condition.

B. Replace damaged and destroyed piezometers or monitoring wells with new piezometers or wells as necessary to meet observation schedules.

C. Cut off piezometers or monitoring wells in excavation areas where piping is exposed, only as necessary to perform observation as excavation proceeds. Continue to maintain and make specified observations.

D. Remove and grout piezometers inside or outside of excavation area when ground water control operations are complete. Remove and grout monitoring wells when directed by Owner's Representative.

4.7 MONITORING AND RECORDING

A. Monitor and record average flow rate of operation for each deep well, or for each

wellpoint or eductor header used in dewatering system. Also, monitor and record water level and ground water recovery. Record observations daily until steady conditions are achieved and twice weekly thereafter.

B. Observe and record elevation of water level daily as long as ground water control system is in operation, and weekly thereafter until Work is completed or piezometers or wells are removed, except when Owner's Representative determines more frequent monitoring and recording are required. Comply with Owner's Representative's direction for increased monitoring and recording and take measures necessary to ensure effective dewatering for intended purpose.

4.8 SURFACE WATER CONTROL

A. Intercept surface water and divert it away from excavations through use of dikes, ditches, curb walls, pipes, sumps or other approved means. Requirement includes temporary works required to protect adjoining properties from surface drainage caused by construction operations.

B. Divert surface water and seepage water into sumps and pump it into drainage channels or storm drains, when approved by agencies having jurisdiction. Provide settling basins when required by agencies.

END OF SECTION 01 57 19

SECTION 01 57 23 – TEMPORARY STORM WATER POLLUTION CONTROL

PART 1 – GENERAL

1.1 SECTION INCLUDES

A. Implementation of Storm Water Pollution Prevention Plans (SWP3) described in Division 1.

B. Installation and maintenance of storm-water pollution prevention structures: diversion dikes, interceptor dikes, diversion swales, interceptor swales, down spout extenders, pipe slope drains, paved flumes and level spreaders. Structures are used during construction and prior to final development of the site.

C. Filter Fabric Fences:
   1. Type 1: Temporary filter fabric fences for erosion and sediment control in non-channelized flow areas.
   2. Type 2: Temporary reinforced filter fabric fences for erosion and sediment control in channelized flow areas.

D. Straw Bale Fence.

1.2 MEASUREMENT AND PAYMENT

A. UNIT PRICES
   1. Payment for all SWP3 item are on a lump sum basis.

B. Stipulated Price (Lump Sum) Contract. If Contract is Stipulated Price Contract, payment for Work in this Section is included in total Stipulated Price.

1.3 REFERENCE STANDARDS

A. ASTM
   1. A 36 - Standard Specification for Carbon Structural Steel.
   2. D698 - Standard Test Methods for Laboratory Compaction Characteristics of Soil Using Standard Effort [12,400 ft-lbf/ft3 (600 kN-m/m3)].
   3. D3786 - Standard Test Method for Hydraulic Bursting Strength for Knitted Goods and Nonwoven Fabrics.
   4. D 4355 - Standard Test Method for Deterioration of Geotextiles from Exposure to Ultraviolet Light and Water (Xenon-Arc Type Apparatus).
   5. D 4491 - Standard Test Methods for Water Permeability of Geotextiles by Permittivity.
   6. D 4632 - Standard Test Method for Grab Breaking Load and Elongation of Geotextiles.
   7. D 4833 - Standard Test Method for Index Puncture Resistance of Geotextiles, Geomembranes, and Related Products.
   8. D 6382 - Standard Practice for Dynamic Mechanical Analysis and Thermogravimetry of Roofing and Waterproofing Membrane Material.

B. Storm Water Management Handbook for Construction Activities prepared by City of

Houston, Harris County and Harris County Flood Control District.

1.4 SYSTEM DESCRIPTIONS

A. Filter Fabric Fence Type 1 and Type 2: Install to allow surface or channel runoff percolation through fabric in sheet-flow manner and to retain and accumulate sediment. Maintain Filter Fabric Fences to remain in proper position and configuration at all times.

B. Interceptor Dikes and Swales: Construct to direct surface or channel runoff around the project area or runoff from project area into sediment traps.

C. Drop Inlet Baskets: Install to allow runoff percolation through the basket and to retain and accumulate sediment. Clean accumulation of sediment to prevent clogging and backups.

D. Sediment traps: Construct to pool surface runoff from construction area to allow sediment to settle onto the bottom of trap.

1.5 SUBMITTALS

A. Conform to requirements of Division 1.

B. Submit manufacturer's literature for product specifications and installation instructions.

C. Submit manufacturer’s catalog sheets and other product data on geotextile or filter fabrics, outlet pipe, perforated riser and connectors.

D. Submit proposed methods, equipment, materials, and sequence of operations for storm-water pollution prevention structures.

E. Submit shop drawings for Drop Inlet Baskets.

PART 2 – PRODUCTS

2.1 CONCRETE

A. Concrete: Class B in accordance with Division 32 or as shown on the Drawings.

2.2 AGREGATE MATERIALS

A. Use poorly graded cobbles with diameter greater than 2 inches and less than 5 inches.

B. Provide gravel lining in accordance with Division 31 or as shown on the drawings.

C. Provide clean cobbles and gravel consisting of crushed concrete or stone. Use clean, hard crushed concrete or stone free from adherent coatings, salt, alkali, dirt, clay, loam, shale, soft or flaky materials, or organic matter.

D. Sediment Pump Pit Aggregate: Use nominal 2-inch diameter river gravel.

2.3 PIPE

A. Polyethylene culvert pipe or PVC sewer pipe in accordance with Division 33 or as shown on the Drawings.

B. Inlet Pipes: Galvanized steel pipe in accordance with Division 33 or as shown on the Drawings.

C. Standpipe for Sediment Pump Pits: Galvanized round culvert pipe or round PVC pipe, minimum of 12-inch and a maximum of 24-inch diameter, perforate at 6 to 12 inch centers around circumference.

2.4 GEOTEXTILE FILTER FABRIC

A. Woven or nonwoven geotextile filter fabric made of either polypropylene, polyethylene, ethylene, or polyamide material, in continuous rolls of longest practical length.

B. Grab Strength: 100 psi in any principal direction (ASTM D-4632), Mullen burst strength >200 psi (ASTM D-3786), and equivalent opening size between 50 and 140.

C. Furnish ultraviolet inhibitors and stabilizers for minimum 6 months of expected usable construction life at temperature range of 0 degrees F to 120 degrees F.

D. Mirafi, Inc., Synthetic Industries, or equivalent.

2.5 FENCING

A. Wire Fencing: Woven galvanized steel wire, 14 gauge by 6-inch square mesh spacing, minimum 24 inch roll or sheet width of longest practical length.

B. Fence Stakes: Nominal 2 x 2 inch moisture-resistant treated wood or steel posts (min. of 1.25 lbs. per linear foot and Brinell Hardness greater than 140) with safety caps on top; length as required for minimum 12 inch bury and full height of filter fabric.

2.6 SANDBAGS

A. Provide woven material made of polypropylene, polyethylene, or polyamide material.
   1. Minimum unit weight of four ounces per square yard.
   2. Minimum grab strength of 100 psi in any principal direction (ASTM D4632).
   3. Mullen burst strength exceeding 300 psi (ASTM D3786).
   4. Ultraviolet stability exceeding 70 percent.
   5. Size: Length: 18 to 24 inches. Width: 12 to 18 inches. Thickness: 6 to 8 inches. Weight: 50 to 125 pounds.

2.7 DROP INLET BASKET

A. Provide steel frame members in accordance with ASTM A36.

B. Construct top frame of basket with two short sides of 2 inch by 2 inch and single long side of

1 inch by 1 inch, 1/8 inch angle iron. Construct basket hangers of 2 inch by 1/4 inch iron bars. Construct bottom frame of 1 inch by 1/4 inch iron bar or 1/4 inch plate with center 3 inches removed. Use minimum 1/4 inch diameter iron rods or equivalent for sides of inlet basket. Weld minimum of 14 rods in place between top frame/basket hanger and bottom frame. Exact dimensions for top frame and insert basket will be determined based on dimensions of type of inlet being protected.

PART 3 – EXECUTION

3.1 PREPARATION, INSTALLATION AND MAINTENANCE

A. Provide erosion and sediment control structures at locations shown on the Drawings.

B. Do not clear, grub or rough cut until erosion and sediment control systems are in place unless approved by Project Manger to allow installation of erosion and sediment control systems, soil testing and surveying.

C. Maintain existing erosion and sediment control systems located within project site until acceptance of Project or until directed by Project Manger to remove and discard existing system.

D. Regularly inspect and repair or replace damaged components of erosion and sediment control structures. Unless otherwise directed, maintain erosion and sediment control structure until project area stabilization is accepted. Re-dress and replace granular fill at outlets as needed to replenish depleted granular fill. Remove erosion and sediment control structures promptly when directed by Project Manger. Dispose of materials in accordance with Division 1.

E. Remove and dispose sediment deposits at the designated spoil site for the Project. If a project spoil site is not designated on Drawings, dispose of sediment off site at approved location in accordance with Division 1.

F. Unless otherwise shown on the Drawings, compact embankments, excavations, and trenches in accordance with Division 31.

G. Prohibit equipment and vehicles from maneuvering on areas outside of dedicated right of way and easements for construction. Immediately repair damage caused by construction traffic to erosion and sediment control structures.

H. Protect existing trees and plants in accordance with Division 1.

3.2 SEDIMENT TRAPS

A. Install sediment traps so that surface runoff shall percolate through system in sheet flow fashion and allow retention and accumulation of sediment.

B. Inspect sediment traps after each rainfall, daily during periods of prolonged rainfall, and at a minimum once each week. Repair or replace damaged sections immediately.

C. Use fill material for embankment in accordance with Division 31.

D. Excavation length and height shall be as specified on Drawings. Use side slopes of 2:1 or flatter.

E. Stone outlet sediment traps:
   1. Maintain minimum of 6 inches between top of core material and top of stone outlet, minimum of 4 inches between bottom of core material and existing ground and minimum of 1 foot between top of stone outlet and top of embankment.
   2. Embed cobbles minimum of 4 inches into existing ground for stone outlet. Core shall be a minimum of 1 foot in height and in width and wrapped in triple layer of geotextile filter fabric.

F. Sediment Basin with Pipe Outlet Construction Methods: Install outlet pipe and riser as shown on the Drawings.

G. Remove sediment deposits when design basin volume is reduced by one-third or sediment level is one foot below principal spillway crest, whichever is less.

3.3 FILTER FABRIC FENCE CONSTRUCTION METHODS

A. Fence Type 1
   1. Install stakes 6 feet on center maximum and firmly embed minimum 12 inches in soil. If filter fabric is factory pre-assembled with support netting, then maximum support spacing is 8 feet. Install wood stakes at a slight angle toward the source of anticipated runoff.
   2. Trench in the toe of the fence lines so the downward face of the trenches is flat and perpendicular to direction of flow. V-trench configuration as shown on Drawings may also be used.
   3. Lay fabric along edges of trenches in longest practical continuous runs to minimize joints. Make joints only at a support post. Splice with minimum 6-inch overlap and seal securely.
   4. Staple filter fabric to stakes at maximum 3 inches on center. Extend fabric minimum 18 inches and maximum 36 inches above natural ground.
   5. Backfill and compact trench.

B. Fence Type 2
   1. Layout fence same as for Type 1.
   2. Install stakes at 6 feet on center maximum and at each joint in wire fence, firmly embedded 1-foot minimum, and inclined it as for Type 1.
   3. Tie wire fence to stakes with wire at 6 inches on center maximum. Overlap joints minimum one bay of mesh.
   4. Install trench same as for Type 1.
   5. Fasten filter fabric wire fence with tie wires at 3 inches on center maximum.
   6. Layout fabric same as for Type 1. Fasten to wire fence with wire ties at 3 inches on center maximum and, if applicable, to stakes above top of wire fence it as for Type 1.
   7. Backfill and compact trench.

C. Attach filter fabric to wooden fence stakes spaced a maximum of 6 feet apart or steel fence stakes spaced a maximum of 8 feet apart and embedded a minimum of 12 inches. Install stakes at a slight angle toward source of anticipated runoff.

D. Trench in toe of filter fabric fence with spade or mechanical trencher so that downward face of trench is flat and perpendicular to direction of flow. A V-trench configuration may also be used. Lay filter fabric along edges of trench. Backfill and compact trench upon completion of Construction.

E. Filter fabric fence shall have a minimum height of 18 inches and a maximum height of 36

inches above natural ground.

F. Cut length of fence to minimize use of joints. When joints are necessary, splice fabric together only at support post with minimum 6 inch overlap and seal securely.

G. Triangular Filter Fabric Fence Construction Methods:
1. Attach filter fabric to wire fencing, 18 inches on each side. Provide a fabric cover and skirt with continuous wrapping of fabric. Skirt should form continuous extension of fabric on upstream side of fence.
2. Secure triangular fabric filter fence in place using one of the following methods:
   a. Toe-in skirt 6 inches with mechanically compacted material;
   b. Weight down skirt with continuous layer of 3-inch to 5-inch graded rock; or
   c. Trench-in entire structure 4 inches.
3. Anchor triangular fabric filter fence structure and skirt securely in place using 6-inch wire staples on 2-foot centers on both edges and on skirt, or staked using 18-inch by 3/8-inch diameter re-bar with tee ends.
4. Lap fabric filter material by 6 inches to cover segment joints. Fasten joints with galvanized shoat rings.

H. Reinforced Filter Fabric Barrier Construction Methods:
1. Attach woven wire fence to fence stakes.
2. Securely fasten filter fabric material to wire fence with tie wires.
3. When used in swales, ditches or diversions, elevation of barrier at top of filter fabric at flow line location in channel shall be lower than bottom elevation of filter fabric at ends of barrier or top of bank, whichever is less, in order to keep storm water discharge in channel from overtopping bank.
4. Remove sediment deposits when silt reaches depth one-third height of barrier or 6 inches, whichever is less.

3.4 DIKE AND SWALE

A. Unless otherwise indicated, maintain minimum dike height of 18 inches, measured from cleared ground at up slope toe to top of dike. Maintain side slopes of 2:1 or flatter.

B. Dike and Swale Stabilization: When shown on the Drawings, place gravel lining 3 inches thick and compacted into the soil or 6 inches thick if truck crossing is expected. Extend gravel lining across bottom and up both sides of swale minimum height of 8 inches vertically, above bottom. Gravel lining on dike side shall extend up the up slope side of dike a minimum height of 8 inches, measured vertically from interface of existing or graded ground and up slope toe of dike, as shown on Drawings.

C. Divert flow from dikes and swales to sediment basins, stabilized outlets, or sediment trapping devices of types and at locations shown on Drawings. Grade dikes and swales as shown on Drawings, or, if not specified, provide positive drainage with maximum grade of 1 percent to outlet or basin.

D. Clear in accordance with Division 31.

E. Carry out excavation for swale construction so that erosion and water pollution is minimal. Minimum depth shall be 1 foot and bottom width shall be 4 feet, with level swale bottom. Excavation slopes shall be 2:1 or flatter. Clear, grub and strip excavation area of vegetation and root material.

3.5 DOWN SPOUT EXTENDER

A. Down spout extender shall have slope of approximately 1 percent. Use pipe diameter of 4 inches or as shown on the Drawings. Place pipe in accordance with Division 33.

3.6 PIPE SLOPE DRAIN

A. Compact soil around and under drain entrance section to top of embankment in lifts appropriately sized for method of compaction utilized.

B. Inlet pipe shall have slope of 1 percent or greater. Use pipe diameter as shown on the Drawings.

C. Top of embankment over inlet pipe and embankments directing water to pipe shall be at least 1 foot higher at all points than top of inlet pipe.

D. Pipe shall be secured with hold-down grommets spaced 10 feet on centers.

E. Place riprap apron with a depth equal to pipe diameter with 2:1 side slopes.

3.7 PAVED FLUME

A. Compact soil around and under the entrance section to top of the embankment in lifts appropriately sized for method of compaction utilized.

B. Construct subgrade to required elevations. Remove and replace soft sections and unsuitable material. Compact subgrade thoroughly and shape to a smooth, uniform surface.

C. Construct permanent paved flumes in accordance with Drawings.

D. Remove sediment from riprap apron when sediment has accumulated to depth of one foot.

3.8 LEVEL SPREADER

A. Construct level spreader on undisturbed soil and not on fill. Ensure that spreader lip is level for uniform spreading of storm runoff.

B. Maintain at required depth, grade, and cross section as specified on Drawings. Remove sediment deposits as well as projections or other irregularities which will impede normal flow.

3.9 INLET PROTECTION BARRIER

A. Place sandbags and filter fabric fences at locations shown on the SWP3.

3.10 DROP INLET BASKET CONSTRUCTION METHODS.

A. Fit inlet insert basket into inlet without gaps around insert at locations shown on the SWP3.

B. Support for inlet insert basket shall consist of fabricated metal as shown on Drawings.

C. Push down and form filter fabric to shape of basket. Use sheet of fabric large enough to be supported by basket frame when holding sediment and extend at least 6 inches past frame. Place inlet grates over basket/frame to serve as fabric anchor.

D. Remove sediment deposit after each storm event and whenever accumulation exceeds 1-inch depth during weekly inspections.

3.11 BRUSH BERM CONSTRUCTION METHODS

A. Construct brush berm along contour lines by hand placing method. Do not use machine placement of brush berm.

B. Use woody brush and branches having diameter less than 2-inches with 6-inches overlap. Avoid incorporation of annual weeds and soil into brush berm.

C. Use minimum height of 18-inches measured from top of existing ground at upslope toe to top of berm. Top width shall be 24 inches minimum and side slopes shall be 2:1 or flatter.

D. Embed brush berm into soil a minimum of 4-inches and anchor using wire, nylon or polypropylene rope across berm with a minimum tension of 50 pounds. Tie rope securely to 18-inch x 3/8-inch diameter rebar stakes driven into ground on 4-foot centers on both sides of berm.

3.12 STREET AND SIDEWALK CLEANING

A. Keep areas clean of construction debris and mud carried by construction vehicles and equipment. If necessary, install stabilized construction exits at construction, staging, storage, and disposal areas, following Division 1.

B. In addition to stabilized construction access points, shovel or sweep pavements as required to keep areas clean. Do not water hose or sweep debris and mud off street into adjacent areas, except, hose sidewalks during off-peak hours, after sweeping.

3.13 WASTE COLLECTION AREAS

A. Prevent water runoff from passing through waste collection areas, and prevent water runoff from waste collection areas migrating outside collection areas.

3.14 EQUIPMENT MAINTENANCE AND REPAIR

A. Confine maintenance and repair of construction machinery and equipment to areas specifically designated for that purpose, so fuels, lubricants, solvents, and other potential pollutants are not washed directly into receiving streams or storm water conveyance systems. Provide these areas with adequate waste disposal receptacles for liquid and solid waste. Clean and inspect maintenance areas daily.

B. Where designated equipment maintenance areas are not feasible, take precautions during each individual repair or maintenance operation to prevent potential pollutants from washing into streams or conveyance systems. Provide temporary waste disposal receptacles.

3.15 VEHICLE/ EQUIPMENT WASHING AREAS

A. Install wash area (stabilized with coarse aggregate) adjacent to stabilized construction exit(s), as required to prevent mud and dirt run-off. Release wash water into drainage swales or inlets protected by erosion and sediment controls. Build wash areas following Division 1. Install gravel or rock base beneath wash areas.

B. Wash vehicles only at designated wash areas. Do not wash vehicles such as concrete delivery trucks or dump trucks and other construction equipment at locations where runoff flows directly into watercourses or storm water conveyance systems.

C. Locate wash areas to spread out and evaporate or infiltrate wash water directly into ground, or collect runoff in temporary holding or seepage basins.

3.16 WATER RUNOFF AND EROSION CONTROL

A. Control surface water, runoff, subsurface water, and water from excavations and structures to prevent damage to the Work, the site, or adjoining properties.

B. Control fill, grading and ditching to direct water away from excavations, pits, tunnels, and other construction areas, and to direct drainage to proper runoff courses to prevent erosion, sedimentation or damage.

C. Provide, operate, and maintain equipment and facilities of adequate size to control surface water.

D. Dispose of drainage water to prevent flooding, erosion, or other damage to the site or adjoining areas. Follow environmental requirements.

E. Retain existing drainage patterns external to the site by constructing temporary earth berms, sedimentation basins, retaining areas, and temporary ground cover as required to control conditions.

F. Plan and execute construction and earth work to control surface drainage from cuts and fills, and from borrow and waste disposal areas, to prevent erosion and sedimentation.
   1. Hold area of bare soil exposed at one time to a minimum.
   2. Provide temporary controls such as berms, dikes, and drains.

G. Construct fill and waste areas by selective placement to eliminate surface silts or clays which will erode.

H. Inspect earthwork periodically to detect start of erosion. Immediately apply corrective measures as required to control erosion.

I. Dispose of sediments offsite, not in or adjacent to streams or floodplains, nor allow sediments to flush into streams or drainage ways. Assume responsibility for offsite disposal location.

J. Unless otherwise indicated, compact embankments, excavations, and trenches by mechanically blading, tamping, and rolling soil in maximum of 8-inch layers. Provide compaction density at minimum 90 percent Standard Proctor ASTM D-698-78 density. Make at least one test per 500 cubic yards of embankment.

K. Do not maneuver vehicles on areas outside of dedicated rights-of-way and easements for

construction. Immediately repair damage to erosion and sedimentation control systems caused by construction traffic.

L. Do not damage existing trees intended to remain.

3.17 REMOVAL OF CONTROLS

A. Remove erosion and sediment controls when the site is finally stabilized or as directed by Owner's Representative.

B. Dispose of sediments and waste products following Division 1.

END OF SECTION 01 57 23

SECTION 01 60 00 - MATERIALS AND EQUIPMENT

PART 1 - GENERAL

1.01 QUALITY ASSURANCE

A. Compatibility: When given the option of selecting between two or more products for use on the Project, the product selected shall be compatible with products previously selected, even if previously selected products were also options.

1.02 PRODUCT DELIVERY, STORAGE AND HANDLING

A. Deliver, store and handle products in accordance with the manufacturer's recommendations, using means and methods to prevent damage, deterioration and loss, including theft.

1. Schedule delivery to minimize storage at the site and to prevent overcrowding of construction spaces.
2. Coordinate delivery with installation to ensure minimum holding time for items that are flammable, hazardous, easily damaged or sensitive to deterioration, theft and other losses.
3. Deliver products to the site in the manufacturer's original sealed containers or other packaging system, complete with labels and instructions for handling, storing, unpacking, protecting and installing.
4. Inspect products upon delivery to ensure compliance with the Contract Documents, and to ensure that products are undamaged and properly protected.
5. Store products at the site in a manner that will facilitate inspection and measurement of quantity or counting of units.
6. Store heavy materials in a manner that will not endanger supporting construction.
7. Store products subject to damage by the elements above ground, under cover in a weathertight enclosure, with ventilation adequate to prevent condensation. Maintain temperature and humidity within range required by manufacturer's instructions.

PART 2 - PRODUCTS

2.01 PRODUCT SELECTION

A. General Requirements: Provide products complying with the Contract Documents, that are undamaged and, unless otherwise indicated, unused at the time of installation.

1. Provide products complete with all accessories, trim, finish and other items needed for a complete installation and for the intended use and effect.
2. Standard Products: Where available, provide standard products of types that have been produced and used successfully in similar situations on other projects.

B. Product Selection Procedures:

1. Proprietary Specification Requirements: Where only a single product or manufacturer is named, provide the product indicated; no substitutions permitted.
2. Semi-proprietary Specification Requirements: Where two or more products or manufacturers are named, provide one of the products indicated; no substitutions will be

permitted. Where products or manufacturers are specified by name, accompanied by the term "or equal", or a similar term, submit evidence as specified below under Substitutions.

3. Non-Proprietary Specifications: When Specifications list products or manufacturers that are available and may be incorporated in the Work, but do not restrict the Contractor to use of these products only, the Contractor may propose any available product that complies with Contract requirements. Comply with Substitutions requirements below to obtain approval for use of an unnamed product.
4. Descriptive Specification Requirements: Where specifications describe a product or assembly, listing exact characteristics required, with or without use of a brand or trade name, provide a product or assembly that provides the characteristics and otherwise complies with Contract requirements.
5. Performance Specification Requirements: Where Specifications require compliance with performance requirements, provide products that comply with these requirements, and are recommended by the manufacturer for the application indicated. General overall performance is implied where the product is specified for a specific application. Manufacturer's recommendations may be in published literature or by the manufacturer's certification of performance.
6. Codes and Standards: Where the Specifications only require compliance with an imposed code, standard or regulation, select a product that complies with the standards, code or regulations specified.
7. Visual Matching: Where Specifications require matching an established Sample, Architect's decision on whether match is satisfactory will be final.
8. Visual Selection: Where specified requirements include the phrase "as selected from manufacturer's standard colors and patterns" or similar clause, select products and manufacturers complying with other specified requirements. The Architect will select the color, pattern and texture from the product line selected.
9. Substitutions: Substitutions will only be considered when specified materials are no longer available, no longer meet code requirements, or equivalent materials will save the Owner a significant amount of money.

C. Substitutions: For proposed substitutions, submit evidence for review by Architect, who shall be the sole judges of equivalency, that such products are equivalent in every significant way to those specified; indicate cost savings. Bear responsibility for all costs incurred in coordinating and modifying other work to accommodate substitutions.

PART 3 - EXECUTION

3.01 INSTALLATION

A. Comply with manufacturer's instructions and recommendations for installation of products in the applications indicated. Anchor each product securely in place, accurately located and aligned with other Work.

3.02 CLEANING

A. Clean exposed surfaces and protect as necessary to ensure freedom from damage and deterioration at time of Substantial Completion.

END OF SECTION 01 60 00

SECTION 01 72 00 – COMMON EXECUTION REQUIREMENTS

GENERAL

1.01 SUMMARY

A. This Section includes general procedural requirements governing execution of the Work including, but not limited to, the following:

1. Construction layout.
2. Field engineering and surveying.
3. General installation of products.
4. Coordination of Owner-installed products.
5. Progress cleaning.
6. Starting and adjusting.
7. Protection of installed construction.
8. Correction of the Work.

B. Related Sections include the following:

1. Division 01 Section "Cutting and Patching" for procedural requirements for cutting and patching necessary for the installation or performance of other components of the Work.
2. Division 01 Section "Closeout Procedures" for submitting final property survey with Project Record Documents, recording of Owner-accepted deviations from indicated lines and levels, and final cleaning.

PART 2 - PRODUCTS - (Not Used)

PART 3 - EXECUTION

3.01 EXAMINATION

A. Existing Conditions: Before beginning work, investigate and verify the existence and location of mechanical and electrical systems and other construction affecting the Work.

1. Before construction, verify the location and points of connection of utility services.
2. Existing Utilities: Locate underground utilities.

3.02 PREPARATION

A. Existing Utility Interruptions: Do not interrupt utilities serving facilities occupied by Owner or others unless permitted under the following conditions and then only after arranging to provide temporary utility services according to requirements indicated:

1. Notify Owner, in writing, not less than five days in advance of proposed utility interruptions.
2. Do not proceed with utility interruptions without Owner's written permission.

B. Field Measurements: Take field measurements as required to fit the Work properly. Recheck measurements before installing each product. Where portions of the Work are indicated to fit to other construction, verify dimensions of other construction by field measurements before fabrication. Coordinate fabrication schedule with construction progress to avoid delaying the Work.

C. Space Requirements: Verify space requirements and dimensions of items shown diagrammatically on Drawings.

D. Review of Contract Documents and Field Conditions: Immediately on discovery of the need for clarification of the Contract Documents, submit a request for information to Architect. Include a detailed description of problem encountered, together with recommendations for changing the Contract Documents. Submit requests on "Request for Interpretation" form included at the end of in Section 01 26 13.

3.03 INSTALLATION

A. General: Locate the Work and components of the Work accurately, in correct alignment and elevation, as indicated.

1. Make vertical work plumb and make horizontal work level.
2. Where space is limited, comply with provisions of Section 01 31 06. Install components to maximize space available for maintenance and ease of removal for replacement.
3. Conceal pipes, ducts, and wiring in finished areas, unless otherwise indicated.

B. Comply with manufacturer's written instructions and recommendations for installing products in applications indicated.

C. Install products at the time and under conditions that will ensure the best possible results. Maintain conditions required for product performance until Substantial Completion.

D. Conduct construction operations so no part of the Work is subjected to damaging operations or loading in excess of that expected during normal conditions of occupancy.

E. Tools and Equipment: Do not use tools or equipment that produce harmful noise levels.

F. Templates: Obtain and distribute to the parties involved templates for work specified to be factory prepared and field installed. Check Shop Drawings of other work to confirm that adequate provisions are made for locating and installing products to comply with indicated requirements.

G. Anchors and Fasteners: Provide anchors and fasteners as required to anchor each component securely in place, accurately located and aligned with other portions of the Work.

1. Mounting Heights: Where mounting heights are not indicated, request clarification and mount components at heights directed by Architect.

H. Joints: Make joints of uniform width. Where joint locations in exposed work are not indicated, arrange joints for the best visual effect. Fit exposed connections together to form hairline joints.

I. Hazardous Materials: Use products, cleaners, and installation materials that are not considered hazardous.

3.04 OWNER-INSTALLED PRODUCTS

A. Site Access: Provide access to Project site for Owner's construction forces.

B. Coordination: Coordinate construction and operations of the Work with work performed by Owner's construction forces, AV, IT, etc.

1. Construction Schedule: Inform Owner of Contractor's preferred construction schedule for Owner's portion of the Work. Adjust construction schedule based on a mutually agreeable timetable. Notify Owner if changes to schedule are required due to differences in actual construction progress.
2. Preinstallation Conferences: Include Owner's construction forces at preinstallation conferences covering portions of the Work that are to receive Owner's work. Attend preinstallation conferences conducted by Owner's construction forces if portions of the Work depend on Owner's construction.

3.05 PROGRESS CLEANING

A. General: Clean Project site and work areas daily, including common areas. Coordinate progress cleaning for joint-use areas where more than one installer has worked. Enforce requirements strictly. Dispose of materials lawfully.

1. Comply with requirements in NFPA 241 for removal of combustible waste materials and debris.
2. Assure there are no significant food matters in dumpster.
3. Containerize hazardous and unsanitary waste materials separately from other waste. Mark containers appropriately and dispose of legally, according to regulations.

B. Site: Maintain Project site free of waste materials and debris.

C. Work Areas: Clean areas where work is in progress to the level of cleanliness necessary for proper execution of the Work.

1. Remove liquid spills promptly.
2. Where dust would impair proper execution of the Work, broom-clean or vacuum the entire work area, as appropriate.

D. Installed Work: Keep installed work clean. Clean installed surfaces according to written instructions of manufacturer or fabricator of product installed, using only cleaning materials specifically recommended. If specific cleaning materials are not recommended, use cleaning materials that are not hazardous to health or property and that will not damage exposed surfaces.

E. Concealed Spaces: Remove debris from concealed spaces before enclosing the space.

F. Exposed Surfaces: Clean exposed surfaces and protect as necessary to ensure freedom from damage and deterioration at time of Substantial Completion.

G. Cutting and Patching: Clean areas and spaces where cutting and patching are performed. Completely remove paint, mortar, oils, putty, and similar materials.

1. Thoroughly clean piping, conduit, and similar features before applying paint or other finishing materials. Restore damaged pipe covering to its original condition.

H. Waste Disposal: Burying or burning waste materials on-site will not be permitted. Washing waste materials down sewers or into waterways will not be permitted.

I. During handling and installation, clean and protect construction in progress and adjoining materials already in place. Apply protective covering where required to ensure protection from damage or deterioration at Substantial Completion.

J. Clean and provide maintenance on completed construction as frequently as necessary through the remainder of the construction period. Adjust and lubricate operable components to ensure operability without damaging effects.

K. Limiting Exposures: Supervise construction operations to assure that no part of the construction, completed or in progress, is subject to harmful, dangerous, damaging, or otherwise deleterious exposure during the construction period.

3.06 STARTING AND ADJUSTING

A. Manufacturer's representative shall be present for initial start up.

B. Start equipment and operating components to confirm proper operation. Remove malfunctioning units, replace with new units, and retest.

C. Adjust operating components for proper operation without binding. Adjust equipment for proper operation.

D. Test each piece of equipment to verify proper operation. Test and adjust controls and safeties. Replace damaged and malfunctioning controls and equipment.

E. Manufacturer's Field Service: If a factory-authorized service representative is required to inspect field-assembled components and equipment installation, comply with qualification requirements in Division 01 Section "Quality Requirements."

3.07 PROTECTION OF INSTALLED CONSTRUCTION

A. Provide final protection and maintain conditions that ensure installed Work is without damage or deterioration at time of Substantial Completion.

B. Comply with manufacturer's written instructions for temperature and relative humidity.

3.08 CORRECTION OF THE WORK

A. Repair or remove and replace defective construction. Restore damaged substrates and finishes. Comply with requirements in Division 01 Section "Cutting and Patching."

1. Repairing includes replacing defective parts, refinishing damaged surfaces, touching up with matching materials, and properly adjusting operating equipment.

B. Restore permanent facilities used during construction to their specified condition.

C. Remove and replace damaged surfaces that are exposed to view if surfaces cannot be repaired without visible evidence of repair.

D. Repair components that do not operate properly. Remove and replace operating components that cannot be repaired.

E. Remove and replace chipped, scratched, and broken glass or reflective surfaces.

END OF SECTION 01 72 00

SECTION 01 73 29 - CUTTING AND PATCHING

PART 1 - GENERAL

1.01 GENERAL DESCRIPTION OF WORK OF THIS SECTION:

A. Section Includes: Procedures for cutting, patching, removal, replacement and refinishing necessitated by damage to or deterioration of installed new work, cutting and removal for access or inspection and similar causes.

1.02 QUALITY ASSURANCE:

A. Perform cutting, patching, removal, replacement and refinishing work so as to preserve the aesthetic and structural integrity, continuity and uniformity of materials and construction.

PART 2 - PRODUCTS

2.01 CUTTING:

A. Neatly cut materials to be removed, leaving a clean edge on adjacent material to remain. Break out material to be removed carefully so irregular edges or surfaces will not be visible after repair, patching and/or replacement and completion of construction.

B. Unfasten and dismantle assembled systems wherever possible at joints between components. Remove components in complete pieces, cutting only where unavoidable.

C. Structural Elements: If removal or alteration becomes necessary, perform such removal or alteration only upon written approval of the Architect and Owner.

2.02 PATCHING, REPAIRING AND REFINISHING:

A. Promptly repair, patch and/or replace items or materials damaged by construction operations in compliance with applicable requirements of the Section covering the work to be performed and the requirements of this Section, at no additional cost to the Owner.

B. Repair damaged areas exposed to view in ceilings, walls, floors and other exposed surfaces of all finished spaces. Match adjacent like materials and finish.

C. Interior penetration holes in walls, ceilings, and floors of unfinished spaces and spaces not exposed to view shall be grouted or filled and sealed with approved materials as required for sound sealing and firestops where required.

END OF SECTION 01 73 29

SECTION 01 74 16 – SITE MAINTENANCE

PART 1 - GENERAL

1.1 SECTION INCLUDES

A. Restoration of site affected by the Work in public or private property, including pavement, esplanades, sidewalks, driveways, fences, lawns and landscaping.

1.2 MEASUREMENT AND PAYMENT

A. Unit Prices.
   1. No separate payment made for site restoration. Include cost in appropriate work section.
   2. Refer to Division 1 for Unit Price procedures.

B. Stipulated Price (Lump Sum) Contracts. If Contract is Stipulated Price Contract, include payment for work under this section in total Stipulated Price.

1.3 DEFINITIONS

A. Phase: Locations identified on the plans and listed in Division 1.

B. Site Restoration: Replacement or reconstruction of Site Improvements located in rights-of- way, easements, public property, and private property affected or altered by the Work.

C. Site Improvement: Includes pavement, curbs and gutters, esplanades, sidewalks, driveways, fences, lawns, irrigation systems, landscaping, and other improvements in existence at the Project site before commencement of construction operations.

1.4 SUBMITTALS

A. Conform to requirements of Division 1.

B. Schedule of testing, service connections, abandonment, backfill, and site restoration.

C. Sample of notices to residents outlining their responsibility for maintenance of site improvements adjacent to the Project that are not disturbed by construction operations.

1.5 SCHEDULING

A. Schedule testing, service connections, abandonment, backfill and site restoration immediately following completion of work in an area.

B. Phased Construction:
   1. Commencement of subsequent Phase will follow scheduling of site restoration of prior Phase. Limit work to a maximum of two Phases of the project.

PART 2 - PRODUCTS

2.1 MATERIALS

A. Pavement, Sidewalks and Driveways: Materials specified in Division 32.

B. Seeding and Sodding: Sod specified in Division 32.

C. Trees, Shrubs and Plantings: Conform to requirements of Division 1.

PART 3 – EXECUTION

3.1 SITE PROJECTS

A. Contractor shall maintain a clean and orderly site throughout construction duration. Work includes but is not limited to: insuring grass is mowed and kept at a manageable height, trash is continuously picked up and construction materials are stored in an orderly fashion.

B. Contractor shall immediately repair and restore any damage done to adjoining properties such that final conditions are as equal to as or better than prior to damage occurring.

3.2 WORK IN PUBLIC ROW

A. Contractor shall repair and replace any damaged items in the Public ROW to the satisfaction of the local governing authority.

3.3 CLEANING

A. Remove debris and trash to maintain a clean and orderly site in accordance with requirements of General Conditions and Division 1.

3.4 LANDSCAPING AND FENCES

A. Seeding and Sodding.
   1. Remove construction debris and level area with bank sand so that new grass surface matches level of existing grass and maintains pre-construction drainage patterns. Level and fill minor ruts or depressions caused by construction operations with bank sand, where grass is still viable.
   2. Restore previously existing turfed areas with sod and fertilize in accordance with Division 32. Sod to match existing turf.
   3. Restore unpaved areas not requiring sodding with hydromulch seeding conforming to Division 32.

B. Trees, Shrubbery and Plants.
   1. Remove and replant trees, shrubs, and plants in accordance with requirements of Division 1.

C. Fence Replacement.
   1. Replace removed or damaged fencing to equal or better condition than existed prior to construction, including concrete footings and mow strips. Provide new wood posts, top and bottom railing and panels. Metal fencing material, not damaged by the

Work, may be reused.

2. Remove and dispose of damaged or substandard material.

3.5 MAINTENANCE

A. Maintain shrubs, plantings, sodded areas and seeded areas.

B. Replace shrubs, plantings and seeded or sodded areas that fail to become established.

C. Refer to Division 1 for maintenance requirements.

END OF SECTION 01 74 16

SECTION 01 74 19 – CONSTRUCTION WASTE MANAGEMENT AND DISPOSAL

PART 1 - GENERAL

1.1 SECTION INCLUDES

A. Disposal of waste material and salvageable material.

1.2 SUBMITTALS

A. Conform to requirements of Division 1.

B. Contractor shall obtain all required permits prior to disposal of excess material in areas designated as being in "100-year Flood Hazard Area."

C. Obtain and submit disposal permits for proposed disposal sites, if required by local ordinances.

D. Submit copy of written permission from property owner, with description of property, prior to disposal of excess material adjacent to Project. Submit written and signed release from property owner upon completion of disposal work.

E. Describe waste materials expected to be stored on-site and a description of controls to reduce Pollutants from these materials, including storage practices to minimize exposure of materials to storm water; and spill prevention and response measures in the Project's Storm Water Pollution Prevention Plan (SWPPP). Refer to Division 1.

PART 2 - Products Not Used

PART 3 – EXECUTION

3.1 SALVAGEABLE MATERIAL

A. Excavated Material: When indicated on Drawings, load, haul, and deposit excavated material at location or locations shown on Drawings outside limits of Project.

B. Base, Surface, and Bedding Material: Load shell, gravel, bituminous, or other base and surfacing material designated for salvage into Owner's designated trucks.

C. Pipe Culvert: Load culverts designated for salvage into Owner's designated trucks.

D. Other Salvageable Materials: Conform to requirements of individual Specification Sections.

E. Coordinate loading of salvageable material on Owner's trucks with Owner's Representative.

F. The Contractor shall dispose of all items the Owner refuses in conformance with the requirements of Division 1 at no additional cost to the Owner.

3.2 EXCESS MATERIAL

A. Remove and legally dispose of vegetation, rubble, broken concrete, debris, asphaltic concrete pavement, excess soil, and other materials not designated for salvage from job site.

B. Excess soil may be deposited on private property adjacent to Project when written permission is obtained from property owner. See Paragraph 1.02 D above.

C. Verify flood plain status of any proposed disposal site. Do not dispose of excavated materials in area designated as within 100-year Flood Hazard Area unless a permit has been obtained. Remove excess material placed in "100-year Flood Hazard Area" without a permit, at no additional cost to the Owner.

D. Remove waste materials from site daily, in order to maintain site in neat and orderly condition.

END OF SECTION 01 74 19

SECTION 01 77 00 – CLOSEOUT PROCEDURES

PART 1 - GENERAL

1.01 GENERAL

A. This section outlines procedures to be followed upon conclusion of the Work for closing out the Construction Contract and supplements the provisions of the modified AIA General Conditions A201.

B. Refer to Construction Contract Close Out Checklist, of this Section, for additional requirements.

C. Refer to Divisions 21 through 28 for additional close out documentation required under those Divisions.

1.02 SUBSTANTIAL COMPLETION, FINAL COMPLETION AND FINAL PAYMENT

A. The procedure for establishing Substantial Completion is described in paragraph 9.8 of the AIA General Conditions and in the Supplementary Conditions.

B. The procedure for establishing Final Completion and Final Payment, including items to be submitted are described in subparagraphs 9.10.1 through 9.10.5 of the AIA General Conditions and in the Supplementary Conditions.

1.03 FINAL CLEANING

A. Ongoing cleaning during construction is required by the General Conditions; see TEMPORARY FACILITIES.

B. Cleaning: Employ experienced workers or professional cleaners for final cleaning. Clean each surface or unit. Comply with manufacturers' instructions. Clean building before walk-through.

C. Complete the following cleaning before requesting inspection for Certificate of Substantial Completion.

1. Remove labels that are not permanent labels.
2. Clean transparent materials, including mirrors and door and window glazing. Remove glazing compound and other noticeable materials. Replace chipped, scratched, broken and otherwise damaged materials.
3. Clean exposed exterior and interior hard-surfaced finishes to a dust-free condition, free of stains, films and similar foreign substances. Restore reflective surfaces to their original reflective condition. Leave concrete floors broom clean. Vacuum carpeted surfaces.
4. Wipe surfaces of mechanical and electrical equipment. Clean plumbing fixtures to a sanitary condition. Clean light fixtures and lamps.
5. Clean the site of rubbish, litter and other foreign substances. Sweep areas broom clean; remove stains, spills and other foreign deposits.

D. Removal of Protection: Remove temporary barriers and devices installed to protect Work during construction.

E. Comply with regulations of governing authorities. Do not burn waste materials. Do not bury debris or excess materials on the Owner's property. Do not discharge harmful or dangerous materials into drains. Remove waste materials from the site and dispose of legally.

1. Where extra materials of value remaining after completion of Work have become the Owner's property, arrange for disposition as directed.

PART – 2 PRODUCTS

2.01 FORMS

A. The following forms, some of which are included herein, shall be submitted to the Architect during the construction contact close out process.
1. Contractor's Affidavit of Payment of Debts and Claims
2. Contractor's Affidavit of Payment of Release of Liens
3. Consent of Surety to Final Payment
4. General Contractor Affidavit and Release
5. Subcontractor/Supplier Affidavit and Release
6. General Contractor Guarantee
7. Subcontractor Guarantee
8. General Contractor Hazardous Material Certificate
9. Subcontractor/Supplier Hazardous Material Certificate
10. Dumpster Permits
11. Flame Spread Certificates for all required materials specified throughout Project Manual
12. Certificates for Finished Floor Elevations issued by a Registered Texas Surveyor in good standing.
13. City Certificate of Occupancy
14. "Project Close-out" Form at the end of this Section.

B. Use only the enclosed forms. Additional forms are available from the Architect.

2.02 PROJECT CLOSE OUT MANUAL

A. The Contractor shall assemble and deliver to the Architect two (2) complete copies of the Project Close Out Manual consisting of the documents listed below and others as may be required under other sections of the Project Manual. Manual shall be constructed of a good quality vinyl 3-ring binder with all pages 8-1/2" x 11".

B. First sheet shall identify the project, Owner, Architect, Architect's project number, Consultants and Contractor. Provide company name, address telephone number and contact representative for each.

C. Subsequent pages shall include the Table of Contents as included herein and all project

data included in the Table of Contents. Provide identifying tabs between all sections.

PART 3 -EXECUTION

3.01 CLOSE OUT CHECKLIST

A. The Construction Contract Close Out Checklist included herein recaps the major items to be addressed during the close out process. This list is to be used by the Architect and Contractor.

CONSTRUCTION CONTRACT CLOSE OUT MANUAL TABLE OF CONTENTS

Section 1 Contractor's Affidavit of Payment of Debts and Claims (AIA G706)

Section 2 Contractor's Affidavit of Release of Liens (AIA G706A)

Section 3 Consent of Surety to Final Payment (AIA G707)

Section 4 Certificate of Substantial Completion (AIA G704)

Section 5 General Contractor Affidavit and Release

Section 6 Subcontractor/Supplier Affidavit and Release (from each subcontractor and supplier)

Section 7 General Contractor Guarantee

Section 8 Subcontractor Guarantee (from each subcontractor)

Section 9 List of Final Subcontractors/Suppliers

Section 10 Manufacturer's Guarantees and extended service contracts

Section 11 General Contractor Hazardous Material Certificate

Section 12 Subcontractor/Supplier Hazardous Material Certificate

Section 13 Extra Stock Verifications:
1. Carpet and Resilient Flooring
2. Acoustic Ceiling
3. Ceramic Tile
4. Any other as specified or indicated in Contract Documents

Section 14 Demonstration Verifications:
1. Electrical Systems
2. Plumbing Systems
3. Mechanical System
4. Audio/Video Systems
5. Fire Alarm/Suppression Systems
6. PA Systems
7. Any other as specified or indicated in the Contract Documents

Section 15 Operating, maintenance, Cleaning Instruction (identify subcontractor/supplier for each):

1. Ceramic Tile, Carpet
2. Acoustical Wall Panels
3. Restroom Compartments, Washroom Accessories
4. Louvers
5. Any other as specified or indicated in the Contract Documents

Section 16 Keys and Special Tools

Section 17 Certificates of Inspection, Testing and Approval

1. Certificate of Occupancy
2. Notice of Termination (NOT) for NPDES Pollution Prevention Plan PPP
3. Health Department Certification
4. Water/Wastewater Authority Certification
5. Fire Marshal Certification
6. State of Texas Boiler Operating Permit
7. Others as may be required by Contract Documents

Section 18 Serial Numbers

1. Appliances
2. Sound/Communication Equipment
3. Lighting Control Equipment
4. Any other equipment with serial numbers as provided

Section 19 Miscellaneous

1. As-Built (Record Drawings) underground utility drawings showing specific locations of all underground utilities (AutoCAD & Adobe Acrobat Newest Versions).
2. As-Built (Record Drawings) (3) digital devices containing all of the electronic drawings showing all changes made during bidding and construction. All changes shall be clouded and clearly identified. Coordinate with the Architect (AutoCAD & Adobe Acrobat Newest Versions).
3. One full size set of complete As-Built (Record) paper drawings for Owner.

GENERAL CONTRACTOR AFFIDAVIT AND RELEASE

STATE OF TEXAS PROJECT: Fire Stations No. 5 & 11

OWNER: City of Midland

COUNTY OF _____ ARCHITECT: Martinez Architects, LP

KNOW ALL MEN BY THESE PRESENTS:
_____, being first duly sworn, disposes and says:

1. That he is the _____ of _____, the contractor who constructed the project referenced above, and that he is duly authorized to make this General Contractor Affidavit and Release.

2. That to the best of his knowledge and belief, all work required under the contract of the subject construction project has been performed in accordance with the terms thereof, there are no unsatisfied claims for damages resulting from injury or death to any employees, subcontractors, or the public at large arising out of the performance of said contract, or any suits or claims for any other damages of any kind, nature, or description which might constitute a lien upon the property of the Owner.

3. That upon full payment of all sums due him for materials furnished and services rendered by the undersigned in connection with the performance of said contract, as evidenced by the amount shown on the Final Application and Certificate for Payment, the Contractor will release the Owner and the Architect and his consultants from any and all claims of any character arising out of or in any way connected with performance of said contract.

ATTEST (If Corporation) _____
Name of Contractor

_____ _____ _____
Secretary By Date

Subscribed and sworn to before me on this _____ day of _____, 201_____.

Notary Public: _____
My Commission Expires: _____

SUBCONTRACTOR/SUPPLIER AFFIDAVIT AND RELEASE

STATE OF TEXAS PROJECT: Fire Stations No. 5 & 11

OWNER: City of Midland

COUNTY OF _____ ARCHITECT: Martinez Architects, LP

KNOW ALL MEN BY THESE PRESENTS:
_____, being first duly sworn, disposes and says:

1. That he is the _____ of _____, the subcontractor/supplier who supplied, installed, and/or erected the work described below, and that he is duly authorized to make this Subcontractor/Supplier Affidavit and Release:

   Work Performed: _____
   Specification Section(s): _____

2. That all work required under the subject subcontract or purchase order of the subject construction project has been performed in accordance with the terms thereof, that all material men, sub-subcontractors, mechanics, and laborers have been paid and satisfied in full and that there are no outstanding claims of any character arising out of the performance of said contract which have not been paid and satisfied in full.

3. That to the best of his knowledge and belief, there are no unsatisfied claims for damages resulting from injury or death to any employees, sub-subcontractors, or the public at large arising out of the performance of said contract, or any suits or claims for any other damages of any kind, nature, or description which might constitute a lien upon the property of the Owner.

4. That he has received full payment of all sums due him for materials furnished and services rendered by the undersigned in connection with the performance of said contract and has and does hereby release the Owner and the Architect and his consultants and the Contractor from any and all claims of any character arising out of or in any way connected with performance of said contract.

ATTEST (If Corporation) _____
Name of Contractor

_____ By _____ _____
Secretary Date

Subscribed and sworn to before me on this _____ day of _____, 201_____.

Notary Public: _____
My Commission Expires: _____

GENERAL CONTRACTOR GUARANTEE

STATE OF TEXAS PROJECT: Fire Stations No. 5 & 11

OWNER: City of Midland

COUNTY OF _____ ARCHITECT: Martinez Architects, LP

KNOW ALL MEN BY THESE PRESENTS:
_____, being first duly sworn, disposes and says:

1. That he is the _____ of _____, the contractor who constructed the project referenced above, and that he is duly authorized to make this General Contractor Guarantee.

2. The undersigned Contractor warrants to the Owner and Architect that materials and equipment furnished under the Contract are of good quality and new except where otherwise required or permitted by the Contract Documents, that the Work is free from defects not inherent in the quality required or permitted, and that the Work conforms with the requirements of the Contract Documents. Work not conforming to these requirements, including substitutions not properly approved and authorized, may be considered defective. The Contractor's warranty excludes remedy from damage or defect caused by abuse, modifications not executed by the Contractor, improper or insufficient maintenance, improper operation, or normal wear and tear under normal usage.

3. In the event of failure of materials, products, or workmanship, during the specified warranty periods, the Contractor shall take appropriate measures to assure correction or replacement of the defective items, whether notified by the Owner or Architect.

4. The Contractor warrants the entire project for a period of 12 months from the Date of Substantial Completion and specific sections of work for such additional periods as enumerated in the Contract Documents, except as follows:
   _____
   _____

ATTEST (If Corporation) _____
Name of Contractor

_____ _____ _____
Secretary By Date

Subscribed and sworn to before me on this _____ day of _____, 201_____.

Notary Public: _____
My Commission Expires: _____

SUBCONTRACTOR GUARANTEE

STATE OF TEXAS PROJECT: Fire Stations No. 5 & 11

OWNER: City of Midland

COUNTY OF _____ ARCHITECT: Martinez Architects, LP

KNOW ALL MEN BY THESE PRESENTS:
_____, being first duly sworn, disposes and says:

1. That he is the _____ of _____, the subcontractor who supplied, installed, and/or erected the work described below, and that he is duly authorized to make this Subcontractor Guarantee:

   Work Performed: _____
   Specification Section(s): _____

2. The undersigned subcontractor warrants to the Owner and Architect that materials and equipment furnished under the Contract are of good quality and new except where otherwise required or permitted by the Contract Documents, that the Work is free from defects not inherent in the quality required or permitted, and that the Work conforms with the requirements of the Contract Documents. Work not conforming to these requirements, including substitutions not properly approved and authorized, may be considered defective. The Subcontractor's warranty excludes remedy from damage or defect caused by abuse, modifications not executed by the Subcontractor, improper or insufficient maintenance, improper operation, or normal wear and tear under normal usage.

3. In the event of failure of materials, products, or workmanship, during the specified warranty periods, the Contractor shall take appropriate measures to assure correction or replacement of the defective items, whether notified by the Contractor, Owner or Architect.

4. The Subcontractor warrants the work performed for a period of ____ months from the Date of Substantial Completion, except as follows:
   _____
   _____

ATTEST (If Corporation) _____
Name of Contractor

_____ _____ _____
Secretary By Date

Subscribed and sworn to before me on this _____ day of _____, 201_____.

Notary Public: _____
My Commission Expires: _____

GENERAL CONTRACTOR HAZARDOUS MATERIAL CERTIFICATE

STATE OF TEXAS PROJECT: Fire Stations No. 5 & 11

OWNER: City of Midland

COUNTY OF _____ ARCHITECT: Martinez Architects, LP

KNOW ALL MEN BY THESE PRESENTS:
_____, being first duly sworn, disposes and says:

1. That he is the _____ of _____, the contractor who constructed the project referenced above, and that he is duly authorized to make this Certification.

2. That to the best of his information, knowledge, and belief, none of the below-listed hazardous materials have been incorporated into the project:

   - ☐ Asbestos
   - ☐ Lead
   - ☐ P.C.B. (Polychloride Biphenyls)
   - ☐ Refrigerants R-11, R-12, R-113, R-114, R-500 and R-502

ATTEST (If Corporation) _____
Name of Contractor

_____ By _____ _____
Secretary Date

Subscribed and sworn to before me on this _____ day of _____, 201_____.

Notary Public: _____
My Commission Expires: _____

SUBCONTRACTOR/SUPPLIER HAZARDOUS MATERIAL CERTIFICATE

STATE OF TEXAS PROJECT: Fire Stations No. 5 & 11

OWNER: City of Midland

COUNTY OF _____ ARCHITECT: Martinez Architects, LP

KNOW ALL MEN BY THESE PRESENTS:
_____, being first duly sworn, disposes and says:

1. That he is the _____ of _____, the subcontractor/supplier who constructed or provided the sections of work described below, and that he is duly authorized to make this Certification:

   Work Performed: _____

   Specification Section(s): _____

2. That to the best of his information, knowledge, and belief, none of the below-listed hazardous materials have been incorporated into the project:

   - ☐ Asbestos
   - ☐ Lead
   - ☐ P.C.B. (Polychloride Biphenyls)
   - ☐ Refrigerants R-11, R-12, R-113, R-114, R-500 and R-502

ATTEST (If Corporation) _____
Name of Contractor

_____ _____ _____
Secretary By Date

Subscribed and sworn to before me on this _____ day of _____, 201_____.

Notary Public: _____
My Commission Expires: _____

CONSTRUCTION CONTRACT CLOSE OUT CHECKLIST

Project: _____Architect's Project No. _____

Contractor _____ Date _____ Contract Date _____

The following is a checklist for the use of the Architect and Contractor during construction close out. Refer also to the General Conditions and the Supplementary Conditions for detailed information. All information shall be submitted in hard bound copy (quantity as specified) in addition to an electronic form. Electronic files shall be in pdf format, file names properly labeled by content and bookmarked.

Substantial Completion Date

1. Contractor substantially completes Work in accordance with definition of Substantial Completion and submits typewritten detailed list of Items to be completed or corrected. _____

2. Architect/Consultants observe the construction and, if necessary, prepare supplements to Contractor's List of Items. _____

3. Contractor completes remedial work as necessary to bring project to point of Substantial Completion as defined. _____

4. Certificate of Substantial Completion prepared by Architect and executed by all parties. List of any items to be completed or corrected is attached. _____

5. Contractor returns the following items with the executed Certificate of Substantial Completion: _____
   Certificate of Occupancy
   Operations and Maintenance Data
   Reports and Certifications
   Record Documents
   Hazardous Material Certifications

Final Completion

1. Contractor completes all work and submits written notice that all the Work is ready for final inspection and acceptance and submits Final Application for Payment.

2. Owner/Architect/Consultants observe project for completion. _____

3. Contractor submits additional final items in binder specified: _____
   2 copies of Contractor's Affidavit of Payment of Debts and Claims (AIA G706)
   2 copies of Contractor's Affidavit of Release of Liens (AIA G706A)
   2 copies of Consent of Surety to Final payment (AIA G707)
   2 copies of General Contractor Affidavit and Release
   2 copies each of separate affidavit and release from each subcontractor/supplier
   2 copies of General Contractor Guarantee
   2 copies each of separate guarantee from each subcontractor
   2 copies each of manufacturer's guarantees

2 copies each of final list of subcontractors/suppliers
2 copies each of Contractor's and Subcontractor's hazardous material certificates
2 copies of other required items
(re: Table of Contents-Project Close Out Manual)

END OF SECTION 01 77 00

SECTION 01 78 23 – OPERATION AND MAINTENANCE DATA

PART 1 - GENERAL

1.01 SUMMARY

A. This Section includes administrative and procedural requirements for preparing operation and maintenance manuals, including the following:

1. Operation and maintenance documentation directory.
2. Emergency manuals.
3. Operation manuals for systems, subsystems, and equipment.
4. Maintenance manuals for the care and maintenance of products, materials, and finishes, systems and equipment.

B. Related Sections include the following:

1. Division 01 Section "Project Record Documents" for preparing Record Drawings for operation and maintenance manuals.
2. Divisions 02 through 49 Sections for specific operation and maintenance manual requirements for the Work in those Sections.

1.02 DEFINITIONS

A. System: An organized collection of parts, equipment, or subsystems united by regular interaction.

B. Subsystem: A portion of a system with characteristics similar to a system.

1.03 SUBMITTALS

A. Initial Submittal: Submit 2 draft copies of each manual at least 15 days before requesting inspection for Substantial Completion. Include a complete operation and maintenance directory. Architect will return 1 copy of draft and mark whether general scope and content of manual are acceptable.

B. Final Submittal: Submit 1 copy of each manual in final form at least 15 days before final inspection. Architect will return copy with comments within 15 days after final inspection.

1. Correct or modify each manual to comply with Architect's comments. Submit 3 copies of each corrected manual within 15 days of receipt of Architect's comments.

1.04 COORDINATION

A. Where operation and maintenance documentation includes information on installations by more than one factory-authorized service representative, assemble and coordinate information furnished by representatives and prepare manuals.

PART 2 - PRODUCTS

2.01 OPERATION AND MAINTENANCE DOCUMENTATION DIRECTORY

A. Organization: Include a section in the directory for each of the following:

1. List of documents.
2. List of systems.
3. List of equipment.
4. Table of contents.

B. List of Systems and Subsystems: List systems alphabetically. Include references to operation and maintenance manuals that contain information about each system.

C. List of Equipment: List equipment for each system, organized alphabetically by system. For pieces of equipment not part of system, list alphabetically in separate list.

D. Tables of Contents: Include a table of contents for each emergency, operation, and maintenance manual.

E. Identification: In the documentation directory and in each operation and maintenance manual, identify each system, subsystem, and piece of equipment with the same designation used in the Contract Documents. If no designation exists, assign a designation according to ASHRAE Guideline 4, "Preparation of Operating and Maintenance Documentation for Building Systems."

2.02 MANUALS, GENERAL

A. Organization: Unless otherwise indicated, organize each manual into a separate section for each system and subsystem, and a separate section for each piece of equipment not part of a system. Each manual shall contain the following materials, in the order listed:

1. Title page.
2. Table of contents.
3. Manual contents.

B. Title Page: Enclose title page in transparent plastic sleeve. Include the following information:

1. Subject matter included in manual.
2. Name and address of Project.
3. Name and address of Owner.
4. Date of submittal.
5. Name, address, and telephone number of Contractor.
6. Name and address of Architect.
7. Cross-reference to related systems in other operation and maintenance manuals.

C. Table of Contents: List each product included in manual, identified by product name, indexed to the content of the volume, and cross-referenced to Specification Section number in Project Manual.

1. Prepare Manual in Adobe Acrobat format linked and bookmarked to section, system, subsystem, equipment and components. Each item is to be properly identified in a manageable order for use.

2. For hardcopy manuals, if operation or maintenance documentation requires more than one volume to accommodate data, include comprehensive table of contents for all volumes in each volume of the set.

D. Manual Contents: Organize into sets of manageable size. Arrange contents alphabetically by system, subsystem, equipment, and component. If possible, assemble instructions for subsystems, equipment, and components of one system into a single binder.

1. Binders: Heavy-duty, 3-ring, vinyl-covered, loose-leaf binders, in thickness necessary to accommodate contents, sized to hold 8-1/2-by-11-inch(115-by-280-mm) paper; with clear plastic sleeve on spine to hold label describing contents and with pockets inside covers to hold folded oversize sheets.

a. If two or more binders are necessary to accommodate data of a system, organize data in each binder into groupings by subsystem and related components. Cross-reference other binders if necessary to provide essential information for proper operation or maintenance of equipment or system.
b. Identify each binder on front and spine, with printed title "OPERATION AND MAINTENANCE MANUAL," Project title or name, and subject matter of contents. Indicate volume number for multiple-volume sets.

2. Dividers: Heavy-paper dividers with plastic-covered tabs for each section. Mark each tab to indicate contents. Include typed list of products and major components of equipment included in the section on each divider, cross-referenced to Specification Section number and title of Project Manual.
3. Protective Plastic Sleeves: Transparent plastic sleeves designed to enclose diagnostic software diskettes for computerized electronic equipment.
4. Supplementary Text: Prepared on 8-1/2-by-11-inch (115-by-280-mm), 20-lb/sq. ft.(75-g/sq. m) white bond paper.
5. Drawings: Attach reinforced, punched binder tabs on drawings and bind with text.

a. If oversize drawings are necessary, fold drawings to same size as text pages and use as foldouts.
b. If drawings are too large to be used as foldouts, fold and place drawings in labeled envelopes and bind envelopes in rear of manual. At appropriate locations in manual, insert typewritten pages indicating drawing titles, descriptions of contents, and drawing locations.

2.03 EMERGENCY MANUALS

A. Content: Organize manual into a separate section for each of the following:

1. Type of emergency.
2. Emergency instructions.
3. Emergency procedures.

B. Type of Emergency: Where applicable for each type of emergency indicated below, include instructions and procedures for each system, subsystem, piece of equipment, and component:

1. Fire.
2. Flood.

3. Gas leak.
4. Water leak.
5. Power failure.
6. Water outage.
7. System, subsystem, or equipment failure.
8. Chemical release or spill.

C. Emergency Instructions: Describe and explain warnings, trouble indications, error messages, and similar codes and signals. Include responsibilities of Owner's operating personnel for notification of Installer, supplier, and manufacturer to maintain warranties.

D. Emergency Procedures: Include the following, as applicable:
1. Instructions on stopping.
2. Shutdown instructions for each type of emergency.
3. Operating instructions for conditions outside normal operating limits.
4. Required sequences for electric or electronic systems.
5. Special operating instructions and procedures.

2.04 OPERATION MANUALS

A. Content: In addition to requirements in this Section, include operation data required in individual Specification Sections and the following information:

1. System, subsystem, and equipment descriptions.
2. Performance and design criteria if Contractor is delegated design responsibility.
3. Operating standards.
4. Operating procedures.
5. Operating logs.
6. Wiring diagrams.
7. Control diagrams.
8. Piped system diagrams.
9. Precautions against improper use.
10. License requirements including inspection and renewal dates.

B. Descriptions: Include the following:

1. Product name and model number.
2. Manufacturer's name.
3. Equipment identification with serial number of each component.
4. Equipment function.
5. Operating characteristics.
6. Limiting conditions.
7. Performance curves.
8. Engineering data and tests.
9. Complete nomenclature and number of replacement parts.

C. Operating Procedures: Include the following, as applicable:

1. Startup procedures.
2. Equipment or system break-in procedures.
3. Routine and normal operating instructions.

4. Regulation and control procedures.
5. Instructions on stopping.
6. Normal shutdown instructions.
7. Seasonal and weekend operating instructions.
8. Required sequences for electric or electronic systems.
9. Special operating instructions and procedures.

D. Systems and Equipment Controls: Describe the sequence of operation, and diagram controls as installed.

E. Piped Systems: Diagram piping as installed, and identify color-coding where required for identification.

2.05 PRODUCT MAINTENANCE MANUAL

A. Content: Organize manual into a separate section for each product, material, and finish. Include source information, product information, maintenance procedures, repair materials and sources, and warranties and bonds, as described below.

B. Source Information: List each product included in manual, identified by product name and arranged to match manual's table of contents. For each product, list name, address, and telephone number of Installer or supplier and maintenance service agent, and cross-reference Specification Section number and title in Project Manual.

C. Product Information: Include the following, as applicable:

1. Product name and model number.
2. Manufacturer's name.
3. Color, pattern, and texture.
4. Material and chemical composition.
5. Reordering information for specially manufactured products.

D. Maintenance Procedures: Include manufacturer's written recommendations and the following:

1. Inspection procedures.
2. Types of cleaning agents to be used and methods of cleaning.
3. List of cleaning agents and methods of cleaning detrimental to product.
4. Schedule for routine cleaning and maintenance.
5. Repair instructions.

E. Repair Materials and Sources: Include lists of materials and local sources of materials and related services.

F. Warranties and Bonds: Include copies of warranties and bonds and lists of circumstances and conditions that would affect validity of warranties or bonds.

1. Include procedures to follow and required notifications for warranty claims.
2. Contact data for all equipment and warranty issues - post in view of/on all equipment.

2.06 SYSTEMS AND EQUIPMENT MAINTENANCE MANUAL

A. Content: For each system, subsystem, and piece of equipment not part of a system, include source information, manufacturers' maintenance documentation, maintenance procedures,

maintenance and service schedules, spare parts list and source information, maintenance service contracts, and warranty and bond information, as described below.

B. Source Information: List each system, subsystem, and piece of equipment included in the manual, identified by product name and arranged to match manual's table of contents. For each product, list name, address, and telephone number of Installer or supplier and maintenance service agent, and cross-reference Specification Section number and title in Project Manual.

C. Manufacturers' Maintenance Documentation: Manufacturers' maintenance documentation including the following information for each component part or piece of equipment:

1. Standard printed maintenance instructions and bulletins.
2. Drawings, diagrams, and instructions required for maintenance, including disassembly and component removal, replacement, and assembly.
3. Identification and nomenclature of parts and components.
4. List of items recommended to be stocked as spare parts.

D. Maintenance Procedures: Include the following information and items that detail essential maintenance procedures:

1. Test and inspection instructions.
2. Troubleshooting guide.
3. Precautions against improper maintenance.
4. Disassembly; component removal, repair, and replacement; and reassembly instructions.
5. Aligning, adjusting, and checking instructions.
6. Demonstration and training videotape, if available.

E. Maintenance and Service Schedules: Include service and lubrication requirements, list of required lubricants for equipment, and separate schedules for preventive and routine maintenance and service with standard time allotment.

1. Scheduled Maintenance and Service: Tabulate actions for daily, weekly, monthly, quarterly, semiannual, and annual frequencies.
2. Maintenance and Service Record: Include manufacturers' forms for recording maintenance.

F. Spare Parts List and Source Information: Include lists of replacement and repair parts, with parts identified and cross-referenced to manufacturers' maintenance documentation and local sources of maintenance materials and related services.

G. Maintenance Service Contracts: Include copies of maintenance agreements with name and telephone number of service agent - post in view of/on all equipment.

H. Warranties and Bonds: Include copies of warranties and bonds and lists of circumstances and conditions that would affect validity of warranties or bonds.

1. Include procedures to follow and required notifications for warranty claims.

PART 3 - EXECUTION

3.01 MANUAL PREPARATION

A. Operation and Maintenance Documentation Directory: Prepare a separate manual that provides an organized reference to emergency, operation, and maintenance manuals.

B. Emergency Manual: Assemble complete set of emergency information indicating procedures for use by emergency personnel and Owner's operating personnel for types of emergencies indicated.

C. Product Maintenance Manual: Assemble a complete set of maintenance data indicating care and maintenance of each product, material, and finish incorporated into the Work.

D. Operation and Maintenance Manuals: Assemble a complete set of operation and maintenance data indicating operation and maintenance of each system, subsystem, and piece of equipment not part of a system.

1. Engage a factory-authorized service representative to assemble and prepare information for each system, subsystem, and piece of equipment not part of a system.
2. Prepare a separate manual for each system and subsystem, in the form of an instructional manual for use by Owner's operating personnel.

E. Manufacturers' Data: Where manuals contain manufacturers' standard printed data, include only sheets pertinent to product or component installed. Mark each sheet to identify each product or component incorporated into the Work. If data include more than one item in a tabular format, identify each item using appropriate references from the Contract Documents. Identify data applicable to the Work and delete references to information not applicable.

1. Prepare supplementary text if manufacturers' standard printed data are not available and where the information is necessary for proper operation and maintenance of equipment or systems.

F. Drawings: Prepare drawings supplementing manufacturers' printed data to illustrate the relationship of component parts of equipment and systems and to illustrate control sequence and flow diagrams. Coordinate these drawings with information contained in Record Drawings to ensure correct illustration of completed installation.

1. Do not use original Project Record Documents as part of operation and maintenance manuals.
2. Comply with requirements of newly prepared Record Drawings in Division 01 Section "Project Record Documents."

G. Comply with Division 01 Section "Closeout Procedures" for the schedule for submitting operation and maintenance documentation.

END OF SECTION 01 78 23

SECTION 01 79 00 - DEMONSTRATION AND TRAINING

PART 1 – GENERAL

1.01 SUMMARY

A. This Section includes administrative and procedural requirements for instructing Owner's personnel, including the following:
   1. Demonstration of operation of systems, subsystems, and equipment.
   2. Training in operation and maintenance of systems, subsystems, and equipment.
   3. Demonstration and training media.

B. Related Sections include the following:
   1. Divisions 02 through 49 Sections for specific requirements for demonstration and training for products in those Sections.

1.02 SUBMITTALS

A. Instruction Program: Submit two copies of outline of instructional program for demonstration and training, including a schedule of proposed dates, times, length of instruction time, and instructors' names for each training module. Include learning objective and outline for each training module.

   1. At completion of training, submit two complete training manuals for Owner's use.

B. Qualification Data: For firms and persons specified in "Quality Assurance" Article to demonstrate their capabilities and experience. Include lists of completed projects with project names and addresses, names and addresses of architects and owners, and other information specified.

C. Attendance Record: For each training module, submit list of participants and length of instruction time.

D. Demonstration and Training Recordings: Submit two copies at end of each training module.

1.03 QUALITY ASSURANCE

A. Facilitator Qualifications: A firm or individual experienced in training or educating maintenance personnel in a training program similar in content and extent to that indicated for this Project, and whose work has resulted in training or education with a record of successful learning performance.

B. Instructor Qualifications: A factory-authorized service representative, complying with requirements in Division 01 Section "Quality Assurance Requirements," experienced in operation and maintenance procedures and training.

1.04 COORDINATION

A. Coordinate instruction schedule with Owner's operations. Adjust schedule as required to minimize disrupting Owner's operations.

B. Coordinate instructors, including providing notification of dates, times, length of instruction time, and course content.

C. Coordinate content of training modules with content of approved emergency, operation, and maintenance manuals. Do not submit instruction program until operation and maintenance data has been reviewed and approved by Architect.

PART 2 - PRODUCTS

2.01 INSTRUCTION PROGRAM

A. Program Structure: Develop an instruction program that includes individual training modules for each system and equipment not part of a system, as required by individual Specification Sections, and as follows:

1. Motorized doors.
2. Equipment.
3. Fire-protection systems, including fire alarm, fire pumps, and fire-extinguishing systems.
4. Intrusion detection systems.
5. Heat generation, including boilers, feedwater equipment, pumps, steam distribution piping and water distribution piping.
6. Refrigeration systems, including chillers, cooling towers, condensers, pumps, and distribution piping.
7. HVAC systems, including air-handling equipment, air distribution systems, and terminal equipment and devices.
8. HVAC instrumentation and controls.
9. Electrical service and distribution, including transformers, switchboards, panelboards, uninterruptible power supplies and motor controls.
10. Lighting equipment and controls.
11. Communication systems, including intercommunication, clocks and programming, voice and data equipment.

B. Training Modules: Develop a learning objective and teaching outline for each module. Include a description of specific skills and knowledge that participant is expected to master. For each module, include instruction for the following:

1. Basis of System Design, Operational Requirements, and Criteria: Include the following:

a. System, subsystem, and equipment descriptions.
b. Performance and design criteria if Contractor is delegated design responsibility.
c. Operating standards.
d. Regulatory requirements.
e. Equipment function.
f. Operating characteristics.
g. Limiting conditions.
h. Performance curves.

2. Documentation: Review the following items in detail:

a. Emergency manuals.

b. Operations manuals.
c. Maintenance manuals.
d. Project Record Documents.
e. Identification systems.
f. Warranties and bonds.
g. Maintenance service agreements and similar continuing commitments.

3. Emergencies: Include the following, as applicable:

a. Instructions on meaning of warnings, trouble indications, and error messages.
b. Instructions on stopping.
c. Shutdown instructions for each type of emergency.
d. Operating instructions for conditions outside of normal operating limits.
e. Sequences for electric or electronic systems.
f. Special operating instructions and procedures.

4. Operations: Include the following, as applicable:

a. Startup procedures.
b. Equipment or system break-in procedures.
c. Routine and normal operating instructions.
d. Regulation and control procedures.
e. Control sequences.
f. Safety procedures.
g. Instructions on stopping.
h. Normal shutdown instructions.
i. Operating procedures for emergencies.
j. Operating procedures for system, subsystem, or equipment failure.
k. Seasonal and weekend operating instructions.
l. Required sequences for electric or electronic systems.
m. Special operating instructions and procedures.

5. Adjustments: Include the following:

a. Alignments.
b. Checking adjustments.
c. Noise and vibration adjustments.
d. Economy and efficiency adjustments.

6. Troubleshooting: Include the following:

a. Diagnostic instructions.
b. Test and inspection procedures.

7. Maintenance: Include the following
:

a. Inspection procedures.
b. Types of cleaning agents to be used and methods of cleaning.
c. List of cleaning agents and methods of cleaning detrimental to product.
d. Procedures for routine cleaning
e. Procedures for preventive maintenance.

f. Procedures for routine maintenance.
g. Instruction on use of special tools.

8. Repairs: Include the following:

a. Diagnosis instructions.
b. Repair instructions.
c. Disassembly; component removal, repair, and replacement; and reassembly instructions.
d. Instructions for identifying parts and components.
e. Review of spare parts needed for operation and maintenance.

PART 3 - EXECUTION

3.01 PREPARATION

A. Assemble educational materials necessary for instruction, including documentation and training module. Assemble training modules into a combined training manual.

B. Set up instructional equipment at instruction location.

3.02 INSTRUCTION

A. Facilitator: Engage a qualified facilitator to prepare instruction program and training modules, to coordinate instructors, and to coordinate between Contractor and Owner for number of participants, instruction times, and location.

B. Engage qualified instructors to instruct Owner's personnel to adjust, operate, and maintain systems, subsystems, and equipment not part of a system.

1. Owner will furnish Contractor with names and positions of participants.

C. Scheduling: Provide instruction at mutually agreed on times. For equipment that requires seasonal operation, provide similar instruction at start of each season.

1. Schedule training with Owner, with at least seven days' advance notice.

D. Demonstration and Training Media: Record each training module separately. Include classroom instructions and demonstrations, board diagrams, and other visual aids, but not student practice.

1. At beginning of each training module, record each chart containing learning objective and lesson outline.

E. Cleanup: Collect used and leftover educational materials and give to Owner. Remove instructional equipment. Restore systems and equipment to condition existing before initial training use.

3.03 DEMONSTRATION AND TRAINING VIDEOS

A. General: Record each training module separately. Include classroom instructions and d emonstrations, board diagrams, and other visual aids, but not student practice.

1. At beginning of each training module, record each chart containing learning objective and lesson outline.

B. Digital video recordings.

C. Recording: Mount camera on tripod before starting recording, unless otherwise necessary to show area of demonstration and training. Display continuous running time.

D. Narration: Describe scenes on media by audio narration by microphone while digital video is recorded, or by dubbing audio narration off-site after recording. Include description of items being viewed. Describe vantage point, indicating location, direction (by compass point), and elevation or story of construction.

END OF SECTION 01 79 00

SECTION 01 9113 - GENERAL COMMISSIONING REQUIREMENTS

PART 1 GENERAL

1.01 SUMMARY

A. Commissioning is intended to achieve the following specific objectives; this section specifies the Contractor's responsibilities for commissioning:
   1. Verify that the work is installed in accordance with the Contract Documents and the manufacturer’s recommendations and instructions, and that it receives adequate operational checkout prior to startup: Startup reports and Prefunctional Checklists executed by Contractor are utilized to achieve this.
   2. Verify and document that functional performance is in accordance with the Contract Documents: Functional Tests executed by Contractor and witnessed by the Commissioning Authority are utilized to achieve this.
   3. Verify that operation and maintenance manuals submitted to Owner are complete: Detailed operation and maintenance (O&M) data submittals by Contractor are utilized to achieve this.
   4. Verify that the Owner’s operating personnel are adequately trained: Formal training conducted by Contractor is utilized to achieve this.

B. Commissioning, including Functional Tests, O&M documentation review, and training, is to occur after startup and initial checkout and be completed before Substantial Completion.

C. The Commissioning Authority directs and coordinates all commissioning activities; this section describes some but not all of the Commissioning Authority's responsibilities.

D. The Commissioning Authority is employed by Owner.

E. The Commissioning Authority is employed by Construction Manager on behalf of Owner.

1.02 SCOPE OF COMMISSIONING

A. The following are to be commissioned:

B. Plumbing Systems:
   1. Domestic gas water heaters.

C. HVAC System, including:
   1. Condensing Units.
   2. Fan Coil units.
   3. Exhaust Fans
   4. Split Systems.

D. Electrical Systems:
   1. Lighting controls other than manual switches.
   .

E. Other equipment and systems explicitly identified elsewhere in Contract Documents as requiring commissioning.

.

1.03 RELATED REQUIREMENTS

A. Section 01 77-00 - Execution and Closeout Requirements: General startup requirements.

B. Section 01 78-23 - Closeout Submittals: Scope and procedures for operation and maintenance manuals and project record documents.

C. Section 01 79-00 - Demonstration and Training: Scope and procedures for Owner personnel training.

D. Section 23 08-00 - Commissioning of HVAC: HVAC control system testing; other requirements.

1.04 REFERENCE STANDARDS

A. ANSI/RESNET/ICC 301 - Standard for the Calculation and Labeling of the Energy Performance of Low-Rise Residential Buildings using an Energy Rating Index; 2014.

B. ANSI/RESNET/ICC 380 - Standard for Testing Airtightness of Building Enclosures, Airtightness of Heating and Cooling Air Distribution Systems, and Airflow of Mechanical Ventilation Systems; 2016.

C. ASHRAE Std 202 - Commissioning Process for Buildings and Systems; 2018.

D. ASTM E336 - Standard Test Method for Measurement of Airborne Sound Attenuation between Rooms in Buildings; 2017.

E. ASTM E779 - Standard Test Method for Determining Air Leakage Rate by Fan Pressurization; 2010 (Reapproved 2018).

F. ASTM E1827 - Standard Test Methods for Determining Airtightness of Buildings Using an Orifice Blower Door; 2011 (Reapproved 2017).

G. CSI/CSC MF - Masterformat; 2016.

H. NEBB S110 - Whole Building Technical Commissioning Of New Construction; 2018.

I. PECI (Samples) - Sample Forms for Prefunctional Checklists and Functional Performance Tests; Current Edition.

1.05 SUBMITTALS

A. See Section 01 3000 - Administrative Requirements, for submittal procedures; except:
   1. Make all submittals specified in this section, and elsewhere where indicated for commissioning purposes, directly to the Commissioning Authority, unless they require review by Architect; in that case, submit to Architect first.
   2. Submit one copy to the Commissioning Authority, not to be returned.
   3. Make commissioning submittals on time schedule specified by Commissioning Authority.
   4. Submittals indicated as "Draft" are intended for the use of the Commissioning Authority in preparation of Prefunctional Checklists or Functional Test requirements; submit in editable electronic format, Microsoft Word 2010 preferred.
   5. As soon as possible after submittals made to Architect are approved, submit copy of approved submittal to the Commissioning Authority.

B. Product Data: If submittals to Architect do not include the following, submit copies as soon as possible:

1. Manufacturer's product data, cut sheets, and shop drawings.
2. Manufacturer's installation instructions.
3. Startup, operating, and troubleshooting procedures.
4. Fan and pump curves.
5. Factory test reports.
6. Warranty information, including details of Owner's responsibilities in regard to keeping warranties in force.

C. Manufacturers' Instructions: Submit copies of all manufacturer-provided instructions that are shipped with the equipment as soon as the equipment is delivered.

D. Startup Plans and Reports.

E. Completed Prefunctional Checklists.

F. Commissioning Issues Log:
1. Construction observations.
2. Supporting photographs.

1.06 QUALITY ASSURANCE

A. Testing Agency Qualifications: Independent firm specializing in performing testing and inspections of the type specified in this section.

PART 2 PRODUCTS

2.01 TEST EQUIPMENT

A. Provide all standard testing equipment required to perform startup and initial checkout and required Functional Testing; unless otherwise noted such testing equipment will NOT become the property of Owner.

B. Calibration Tolerances: Provide testing equipment of sufficient quality and accuracy to test and/or measure system performance with the tolerances specified. If not otherwise noted, the following minimum requirements apply:
1. Temperature Sensors and Digital Thermometers: Certified calibration within past year to accuracy of 0.5 degree F (0.3 degree C) and resolution of plus/minus 0.1 degree F (0.05 degree C).
2. Pressure Sensors: Accuracy of plus/minus 2.0 percent of the value range being measured (not full range of meter), calibrated within the last year.
3. Calibration: According to the manufacturer’s recommended intervals and when dropped or damaged; affix calibration tags or keep certificates readily available for inspection.

C. Equipment-Specific Tools: Where special testing equipment, tools and instruments are specific to a piece of equipment, are only available from the vendor, and are required in order to accomplish startup or Functional Testing, provide such equipment, tools, and instruments as part of the work at no extra cost to Owner; such equipment, tools, and instruments are to become the property of Owner.

PART 3 EXECUTION

3.01 COMMISSIONING PLAN

A. Commissioning Authority has prepared the Commissioning Plan.
   1. Attend meetings called by the Commissioning Authority for purposes of completing the commissioning plan.
   2. Require attendance and participation of relevant subcontractors, installers, suppliers, and manufacturer representatives.

B. Contractor is responsible for compliance with the Commissioning Plan.

C. Commissioning Plan: The commissioning schedule, procedures, and coordination requirements for all parties in the commissioning process.
   1. Commissioning will be phased (by floors, for example) to minimize the total construction time.

D. Commissioning Schedule:
   1. Submit anticipated dates of startup of each item of equipment and system to Commissioning Authority within 60 days after award of Contract.
   2. Re-submit anticipated startup dates monthly, but not less than 4 weeks prior to startup.
   3. Prefunctional Checklists and Functional Tests are to be performed in sequence from components, to subsystems, to systems.
   4. Provide sufficient notice to Commissioning Authority for delivery of relevant Checklists and Functional Test procedures, to avoid delay.

3.02 DOCUMENTATION IDENTIFICATION SYSTEM

A. Give each submitted form or report a unique identification; use the following scheme.

B. Type of Document: Use the following prefixes:
   1. Startup Plan: SP-.
   2. Startup Report: SR-.
   3. Prefunctional Checklist: PC-.
   4. Functional Test Procedure: FTP-.
   5. Functional Test Report: FTR-.

C. System Type: Use the first 4 digits from CSI/CSC MF (Master Format), that are applicable to the system; for example:
   1. 2300: HVAC system as a whole.
   2. 2320: HVAC Piping and Pumps.
   3. 2330: HVAC Air Distribution.

D. Component Number: Assign numbers sequentially, using 1, 2, or 3 digits as required to accommodate the number of units in the system.

E. Test, Revision, or Submittal Number: Number each successive iteration sequentially, starting with 1.

F. Example: PC-2320-001.2 would be the Prefunctional Checklist for equipment item 1 in the HVAC piping system, probably a pump; this is the second, revised submittal of this checklist.

3.03 STARTUP PLANS AND REPORTS

A. Startup Plans: For each item of equipment and system for which the manufacturer provides a startup plan, submit the plan not less than 8 weeks prior to startup.

B. Startup Reports: For each item of equipment and system for which the manufacturer provides a startup checklist (or startup plan or field checkout sheet), document compliance by submitting the completed startup checklist prior to startup, signed and dated by responsible entity.

C. Submit directly to the Commissioning Authority.

3.04 PREFUNCTIONAL CHECKLISTS

A. A Prefunctional Checklist is required to be filled out for each item of equipment or other assembly specified to be commissioned.
   1. No sampling of identical or near-identical items is allowed.
   2. These checklists do not replace manufacturers' recommended startup checklists, regardless of apparent redundancy.
   3. Prefunctional Checklist forms will not be complete until after award of the contract; the following types of information will be gathered via the completed Checklist forms:
      a. Certification by installing contractor that the unit is properly installed, started up, and operating and ready for Functional Testing.
      b. Confirmation of receipt of each shop drawing and commissioning submittal specified, itemized by unit.
      c. Manufacturer, model number, and relevant capacity information; list information "as specified," "as submitted," and "as installed."
      d. Serial number of installed unit.
      e. List of inspections to be conducted to document proper installation prior to startup and Functional Testing; these will be primarily static inspections and procedures; for equipment and systems may include normal manufacturer’s start-up checklist items and minor testing.
      f. Sensor and actuator calibration information.
   4. All preliminary Prefunctional Checklists are included in the contract documents; the Commissioning Authority has the authority to modify these and will furnish final versions as applicable.
   5. A preliminary list of Prefunctional Checklists is attached, to indicate anticipated scope.
   6. PECI (Samples) found at http://www.peci.org/library/mcpgs.htm indicate anticipated level of detail for Prefunctional Checklists.

B. Contractor is responsible for filling out Prefunctional Checklists, after completion of installation and before startup; witnessing by the Commissioning Authority is not required unless otherwise specified.
   1. Each line item without deficiency is to be witnessed, initialed, and dated by the actual witness; checklists are not complete until all line items are initialed and dated complete without deficiencies.
   2. Checklists with incomplete items may be submitted for approval provided the Contractor attests that incomplete items do not preclude the performance of safe and reliable Functional Testing; re-submission of the Checklist is required upon completion of remaining items.

3. Individual Checklists may contain line items that are the responsibility of more than one installer; Contractor shall assign responsibility to appropriate installers or subcontractors, with identification recorded on the form.
4. If any Checklist line item is not relevant, record reasons on the form.
5. Contractor may independently perform startup inspections and/or tests, at Contractor's option.
6. Regardless of these reporting requirements, Contractor is responsible for correct startup and operation.
7. Submit completed Checklists to Commissioning Authority within two days of completion.
8. See Section 01 7000 - Execution and Closeout Requirements for additional general startup requirements.

C. Commissioning Authority is responsible for furnishing the Prefunctional Checklists to Contractor.
1. Initial Drafts: Contractor is responsible for initial draft of Prefunctional Checklist where so indicated in the Contract Documents.
2. Provide all additional information requested by Commissioning Authority to aid in preparation of checklists, such as shop drawing submittals, manufacturers' startup checklists, and O&M data.
3. Commissioning Authority may add any relevant items deemed necessary regardless of whether they are explicitly mentioned in the Contract Documents or not.
4. When asked to review the proposed Checklists, do so in a timely manner.

D. Commissioning Authority Witnessing: Required for:
1. Each piece of primary equipment, unless sampling of multiple similar units is allowed by the commissioning plan.
2. A sampling of non-primary equipment, as allowed by the commissioning plan.

E. Deficiencies: Correct deficiencies and re-inspect or re-test, as applicable, at no extra cost to Owner.
1. If difficulty in correction would delay progress, report deficiency to the Commissioning Authority immediately.

3.05 FUNCTIONAL TESTS

A. A Functional Test is required for each item of equipment, system, or other assembly specified to be commissioned, unless sampling of multiple identical or near-identical units is allowed by the final test procedures.

B. Contractor is responsible for execution of required Functional Tests, after completion of Prefunctional Checklist and before closeout.

C. Commissioning Authority is responsible for witnessing and reporting results of Functional Tests, including preparation and completion of forms for that purpose.

D. Contractor is responsible for correction of deficiencies and re-testing at no extra cost to Owner; if a deficiency is not corrected and re-tested immediately, the Commissioning Authority will document the deficiency and the Contractor's stated intentions regarding correction.
1. Deficiencies are any condition in the installation or function of a component, piece of equipment or system that is not in compliance with the Contract Documents or does not perform properly.
2. Use the standard form provided with copies submitted to Owner and Contractor.

3. When the deficiency has been corrected, the Contractor completes the form certifying that the item is ready to be re-tested and returns the form to the Commissioning Authority; the Commissioning Authority will reschedule the test and the Contractor shall re-test.
4. Identical or Near-Identical Items: If 10 percent, or three, whichever is greater, of identical or near-identical items fail to perform due to material or manufacturing defect, all items will be considered defective; provide a proposal for correction within 2 weeks after notification of defect, including provision for testing sample installations prior to replacement of all items.
5. Contractor shall bear the cost of Owner and Commissioning Authority personnel time witnessing re-testing.
6. Contractor shall bear the cost of Owner and Commissioning Authority personnel time witnessing re-testing if the test failed due to failure to execute the relevant Prefunctional Checklist correctly; if the test failed for reasons that would not have been identified in the Prefunctional Checklist process, Contractor shall bear the cost of the second and subsequent re-tests.

E. Functional Test Procedures:
1. Some test procedures are included in the Contract Documents; where Functional Test procedures are not included in the Contract Documents, test procedures will be determined by the Commissioning Authority with input by and coordination with Contractor.
2. Examples of Functional Testing:
   a. Test the dynamic function and operation of equipment and systems (rather than just components) using manual (direct observation) or monitoring methods under full operation (e.g., the chiller pump is tested interactively with the chiller functions to see if the pump ramps up and down to maintain the differential pressure setpoint).
   b. Systems are tested under various modes, such as during low cooling or heating loads, high loads, component failures, unoccupied, varying outside air temperatures, fire alarm, power failure, etc.
   c. Systems are run through all the HVAC control system’s sequences of operation and components are verified to be responding as the sequence's state.
   d. Traditional air or water test and balancing (TAB) is not Functional Testing; spot checking of TAB by demonstration to the Commissioning Authority is Functional Testing.
3. Some preliminary Functional Test procedures are included in the contract documents; the Commissioning Authority has the authority to modify these and will furnish final versions as applicable.
4. A preliminary list of Functional Tests is attached, to indicate anticipated scope.
5. PECI (Samples) found at http://www.peci.org/library/mcpgs.htm indicated anticipated level of detail for Functional Tests.

F. Deferred Functional Tests: Some tests may need to be performed later, after substantial completion, due to partial occupancy, equipment, seasonal requirements, design or other site conditions; performance of these tests remains the Contractor's responsibility regardless of timing.

G. Factory Tests: Commissioning Authority and Contractor are responsible for coordinating testing of equipment at the factory by factory personnel, to ensure compliance with commissioning requirements.

H. Field Tests By Others: Where Functional Tests are indicated as to be performed by others not subject to the Contract Documents, those tests are not subject to these commissioning requirements.

3.06 SENSOR AND ACTUATOR CALIBRATION

A. Calibrate all field-installed temperature, relative humidity, carbon monoxide, carbon dioxide, and pressure sensors and gauges, and all actuators (dampers and valves) on this piece of equipment shall be calibrated. Sensors installed in the unit at the factory with calibration certification provided need not be field calibrated.

B. Calibrate using the methods described below; alternate methods may be used, if approved by Commissioning Authority and Owner beforehand. See PART 2 for test instrument requirements. Record methods used on the relevant Prefunctional Checklist or other suitable forms, documenting initial, intermediate and final results.

C. All Sensors:
   1. Verify that sensor location is appropriate and away from potential causes of erratic operation.
   2. Verify that sensors with shielded cable are grounded only at one end.
   3. For sensor pairs that are used to determine a temperature or pressure difference, for temperature make sure they are reading within 0.2 degree F (0.1 degree C) of each other, and for pressure, within tolerance equal to 2 percent of the reading, of each other.
   4. Tolerances for critical applications may be tighter.

D. Sensors Without Transmitters - Standard Application:
   1. Make a reading with a calibrated test instrument within 6 inches (150 mm) of the site sensor.
   2. Verify that the sensor reading, via the permanent thermostat, gauge or building automation system, is within the tolerances in the table below of the instrument-measured value.
   3. If not, install offset, calibrate or replace sensor.

E. Sensors With Transmitters - Standard Application.
   1. Disconnect sensor.
   2. Connect a signal generator in place of sensor.
   3. Connect ammeter in series between transmitter and building automation system control panel.
   4. Using manufacturer’s resistance-temperature data, simulate minimum desired temperature.
   5. Adjust transmitter potentiometer zero until 4 mA is read by the ammeter.
   6. Repeat for the maximum temperature matching 20 mA to the potentiometer span or maximum and verify at the building automation system.
   7. Record all values and recalibrate controller as necessary to comply with specified control ramps, reset schedules, proportional relationship, reset relationship and P/I reaction.
   8. Reconnect sensor.
   9. Make a reading with a calibrated test instrument within 6 inches (150 mm) of the site sensor.
   10. Verify that the sensor reading, via the permanent thermostat, gauge or building automation system, is within the tolerances in the table below of the instrument-measured value.
   11. If not, replace sensor and repeat.
   12. For pressure sensors, perform a similar process with a suitable signal generator.

F. Sensor Tolerances for Standard Applications: Plus/minus the following maximums:
   1. Watthour, Voltage, Amperage: 1 percent of design.
   2. Pressure, Air, Water, Gas: 3 percent of design.
   3. Air Temperatures (Outside Air, Space Air, Duct Air): 0.4 degrees F (0.2 degree C).
   4. Relative Humidity: 4 percent of design.
   5. Barometric Pressure: 0.1 inch of Hg (340 Pa).

6. Flow Rate, Air: 10 percent of design.
7. Flow Rate, Water: 4 percent of design.
8. Flow Rate, Steam: 3 percent of design.
9. AHU Wet Bulb and Dew Point: 2.0 degrees F (1.1 degrees C).
10. Hot Water Coil and Boiler Water Temperature: 1.5 degrees F (0.8 degrees C).
11. Cooling Coil, Chilled and Condenser Water Temperatures: 0.4 degrees F (0.2 degree C).
12. Combustion Flue Temperature: 5.0 degrees F (2.8 degrees C).
13. Oxygen and CO2 Monitors: 0.1 percentage points.
14. CO Monitor: 0.01 percentage points.
15. Natural Gas and Oil Flow Rate: 1 percent of design.

G. Critical Applications: For some applications more rigorous calibration techniques may be required for selected sensors. Describe any such methods used on an attached sheet.

H. Valve/Damper Stroke Setup and Check:
1. For all valve/damper actuator positions checked, verify the actual position against the control system readout.
2. Set pump/fan to normal operating mode.
3. Command valve/damper closed; visually verify that valve/damper is closed and adjust output zero signal as required.
4. Command valve/damper to open; verify position is full open and adjust output signal as required.
5. Command valve/damper to a few intermediate positions.
6. If actual valve/damper position does not reasonably correspond, replace actuator or add pilot positioner (for pneumatics).

I. Isolation Valve or System Valve Leak Check: For valves not associated with coils.
1. With full pressure in the system, command valve closed.
2. Use an ultra-sonic flow meter to detect flow or leakage.

3.07 TEST PROCEDURES – GENERAL

A. Provide skilled technicians to execute starting of equipment and to execute the Functional Tests. Ensure that they are available and present during the agreed upon schedules and for sufficient duration to complete the necessary tests, adjustments and problem-solving.

B. Provide all necessary materials and system modifications required to produce the flows, pressures, temperatures, and conditions necessary to execute the test according to the specified conditions. At completion of the test, return all affected equipment and systems to their pre-test condition.

C. Sampling: Where Functional Testing of fewer than the total number of multiple identical or near-identical items is explicitly permitted, perform sampling as follows:
1. Identical Units: Defined as units with same application and sequence of operation; only minor size or capacity difference.
2. Sampling is not allowed for:
   a. Major equipment.
   b. Life-safety-critical equipment.
   c. Prefunctional Checklist execution.
3. XX = the percent of the group of identical equipment to be included in each sample; defined for specific type of equipment.

4. YY = the percent of the sample that if failed will require another sample to be tested; defined for specific type of equipment.
5. Randomly test at least XX percent of each group of identical equipment, but not less than three units. This constitutes the "first sample."
6. If YY percent of the units in the first sample fail, test another XX percent of the remaining identical units.
7. If YY percent of the units in the second sample fail, test all remaining identical units.
8. If frequent failures occur, resulting in more troubleshooting than testing, the Commissioning Authority may stop the testing and require Contractor to perform and document a checkout of the remaining units prior to continuing testing.

D. Manual Testing: Use hand-held instruments, immediate control system readouts, or direct observation to verify performance (contrasted to analyzing monitored data taken over time to make the “observation”).

E. Simulating Conditions: Artificially create the necessary condition for the purpose of testing the response of a system; for example apply hot air to a space sensor using a hair dryer to see the response in a VAV box.

F. Simulating Signals: Disconnect the sensor and use a signal generator to send an amperage, resistance or pressure to the transducer and control system to simulate the sensor value.

G. Over-Writing Values: Change the sensor value known to the control system in the control system to see the response of the system; for example, change the outside air temperature value from 50 degrees F to 75 degrees F to verify economizer operation.

H. Indirect Indicators: Remote indicators of a response or condition, such as a reading from a control system screen reporting a damper to be 100 percent closed, are considered indirect indicators.

I. Monitoring: Record parameters (flow, current, status, pressure, etc.) of equipment operation using dataloggers or the trending capabilities of the relevant control systems; where monitoring of specific points is called for in Functional Test Procedures:
1. All points that are monitored by the relevant control system shall be trended by Contractor; at the Commissioning Authority’s request, Contractor shall trend up to 20 percent more points than specified at no extra charge.
2. Other points will be monitored by the Commissioning Authority using dataloggers.
3. At the option of the Commissioning Authority, some control system monitoring may be replaced with datalogger monitoring.
4. Provide hard copies of monitored data in columnar format with time down left column and at least 5 columns of point values on same page.
5. Graphical output is desirable and is required for all output if the system can produce it.
6. Monitoring may be used to augment manual testing.

3.10 OPERATION AND MAINTENANCE MANUALS

A. See Section 01 7800 - Closeout Submittals for additional requirements.

B. Add design intent documentation furnished by Architect to manuals prior to submission to Owner.

C. Submit manuals related to items that were commissioned to Commissioning Authority for review; make changes recommended by Commissioning Authority.

D. Commissioning Authority will add commissioning records to manuals after submission to Owner.

END OF SECTION 01 91 13

SECTION 02 55 00 - REMEDIATION SOIL STABILIZATION

PART 1 - GENERAL

1.01 SCOPE

This section specifies adding lime to natural subgrade material and compacted embankments to stabilize them

After street subgrade has been brought to grade (prior to compaction of the top six-inches (6") of subgrade) provide blended lime stabilization per Geotechnical Investigation

1.02 ACCEPTABLE METHOD

Commercial chemical stabilization utilizing a blend of flyash and hydrated lime is acceptable to stabilize the natural in-place subgrade

1.03 RELATED WORK

A. Division 2, Site Work
   1. Roadway excavation
   2. Grading and compaction of subgrade

1.4 PAYMENT

A. No separate payment will be made. Include cost of work under this section in lump sum price bid.

PART 2 - PRODUCTS

2.01 LIME QUANTITIES

A. The quantity of lime specified shall be six percent (6%) by weight. The quantity can be adjusted based on field testing and results.

2.02 COMMERCIAL LIME SLURRY

A. Provide a commercial lime slurry with a dry solids content of at least 36 percent (36%) by weight of slurry, and forming a pumpable suspension of solids in water.

   1. Water: Provide water containing dissolved matter not injurious or objectionable, either in quantity or in quality
   2. Solids: The solids portion of the mixture must consist principally of hydrated lime meeting the following requirements:

      a. The solids content of the lime slurry must have a hydrate alkalinity ($Ca(OH)_2$) of not less than 90 percent (90%) by weight.
      b. Provide that the percent by weight of residue retained of the solids content of lime slurry conforms to the following:

Sieve	Maximum Percent Retained Residue
No. 6 (3360 micron)	0.0
No. 10 (220 micron)	1.0

2.03 EQUIPMENT

A. Provide approved placing and mixing equipment in satisfactory working condition.

B. Provide distributor tank trucks for the lime slurry. Equip them with circulating pumps to mix slurry, and with pressure distributor bars to distribute slurry.

C. Store lime in weatherproof containers, bins or buildings. Protect lime from any dampness or moisture.

D. Weigh lime furnished in trucks on approved scales.

E. Furnish bagged lime bearing the manufacturer's certified weight.

PART 3 - EXECUTION

3.01 PREPARING SUBGRADE

A. Prepare subgrade properly before beginning lime treatment. Scarify or excavate to the depth shown, providing the machine required. Stabilize unstable material below indicated depth by proper compaction.

3.02 APPLICATION

A. Dry Placing:

1. Place lime using approved screw type spreader box or distribute uniformly by bag at the rate shown. Do not place more than can be initially mixed during the same working day. Do not spread with a maintainer or motor grader.
2. Cover or mix lime within six (6) hours after application. Do not place lime during windy or other adverse weather. Lime may be sprinkled lightly with water to reduce dusting.

B. Slurry Placing:

1. Make successive passes over subgrade to be limed. Do not place more lime than can be initially mixed during the same working day.

3.03 MIXING

A. Procedures:

1. Mixing procedures for either dry placing or slurry placing are the same.

B. Preliminary Mixing:

1. Pulverize soil to minus two-inches (2").
2. Add water to bring moisture content of the soil and lime mixture at least five percent (5%) above optimum.
3. Rotary mix soil, lime and water to required depth, using approved single-pass or multiple-pass rotary speed mixer.
4. After initial mixing, shape the subgrade to the appropriate section. Compact it lightly for preliminary curing.

C. Final Mixing:

1. After preliminary curing, uniformly mix soil and lime to required depth. Use an approved single-pass or multiple-pass rotary speed mixer.
2. Add water to bring moisture content of soil-lime mixture to at least five percent (5%) above optimum.
3. Continue mixing and pulverizing soil until all clods are broken down to pass a one-inch (1") screen. At least 70 percent (70%) should pass a $^{3}/_{8}$-inch ($^{3}/_{8}$") sieve, nonslaking fractions excluded.
4. After final mixing, shape subgrade to final section, compact and cure.

D. Exception:

1. If pulverization requirements of final mixing can be met during preliminary mixing, then preliminary curing and final mixing can be eliminated.

3.04 COMPACTION

A. Preliminary Compaction:

1. Seal surface of subgrade by rolling lightly with light pneumatic rollers. Sealing is done as a precaution against heavy rainfall.

B. Final Compaction

1. Attain optimum moisture content.
2. Begin compaction immediately after final mixing.
3. Begin compacting at the bottom, using approved heavy pneumatic or vibrating rollers, or a combination of tamping roller and light pneumatic roller, until entire depth is uniformly compacted.
4. Compact treated material so as not to mix it with underlying subgrade material.
5. All irregularities, depressions, and weak spots disclosed by passes of a heavy pneumatic roller (proof roller) shall be corrected by replacing with satisfactory material and recompacted as specified.

6. Maintain smooth surface until base course or pavement is placed. Attain at least 95 percent (95%) of AASHTO density, using Standard Test Method T-99, at minus three percent (-3%) to plus five percent (5%) of optimum moisture content of treated material
7. Use light pneumatic roller for final surface rolling

3.05 CURING

A. Preliminary Curing

1. Cure soil-lime material for two (2) to four (4) days. Keep subgrade moist during cure

B. Final Curing

1. Cure the lime-stabilized subgrade for three (3) to seven (7) days, as directed. Keep traffic off during cure, other than a light pneumatic roller. Do not permit vehicles heavier than 10 tons on the subgrade. Use moist curing or membrane curing for final cure

a. Moist Cure:
   1) Keep subgrade surface damp by sprinkling. Roll with light pneumatic roller to keep surface knit together
b. Membrane Cure:
   (1) Apply two (2) coats of asphalt emulsion to subgrade surface the first day after final compaction
   (2) Apply one (1) coat each day thereafter for three (3) days
   (3) Total applications will be 0.25 gallons of asphalt emulsion per square yard of subgrade surface

END OF SECTION 02 55 00

SECTION 03 30 00 - CAST-IN-PLACE CONCRETE

PART 1 - GENERAL

1.01 RELATED DOCUMENTS

A. Drawings and general provisions of Contract, including General and Supplementary Conditions and Division-1 Specification sections, apply to work of this section.

1.02 DESCRIPTION OF WORK

A. Extent of concrete work is shown on drawings, including schedules, notes and details which show size and location of members and type of concrete to be poured. Furnish all labor, materials, services, equipment and hardware required in conjunction with or related to the forming, delivery and pouring of all poured-in-place concrete work.

B. Concrete paving and walks are specified in Division 32.

C. Architectural Concrete, Precast Concrete, Post-Tensioned Concrete and special requirements for Tilt-up Concrete Construction are specified in other Division-3 sections.

1.03 QUALIFICATIONS

A. The concrete supplier shall have a minimum of two years experience in manufacturing ready-mixed concrete products complying with ASTM C 94 requirements for production facilities and equipment. The supplier must be certified according to the National Ready Mixed Concrete Association's Certification of Ready Mixed Concrete Production Facilities.

B. The concrete contractor shall have a minimum of two years experience with installation of concrete similar in material, design and extent to that indicated for this Project and whose work has resulted in construction with a record of successful -service performance.

C. Any testing laboratory retained to run certain tests required by this specification shall meet the basic requirements of ASTM E 329.

1.04 QUALITY CONTROL

A. The Contractor is responsible for quality control, including workmanship and materials furnished by his subcontractors and suppliers.

B. Codes and Standards: Comply with provisions of following codes, specifications and standards, except where more stringent requirements are shown or specified:

1. ACI 301 - "Specifications for Structural Concrete for Buildings".

2. ACI 117 - 'Specifications for Tolerances for Concrete Construction and Materials."
3. ACI 318 - "Building Code Requirements for Reinforced Concrete".
4. Concrete Reinforcing Steel Institute (CRSI), "Manual of Standard Practice".

C. Document Conflict and Precedence: In case of conflict among documents, including architectural and structural drawings and specifications, notify the Architect/Engineer prior to submitting proposal. In case of conflict between and/or among the structural drawings and specifications, the strictest interpretation shall govern, unless specified otherwise in writing by the Architect/Engineer.

D. Inspection and Testing of the Work: Materials and installed work may require testing and retesting, as directed by the governing building code or the Architect/Engineer, at any time during progress of work. The Contractor shall provide adequate notification to the Owner's Testing Agency of construction operations including the project schedule to allow the Testing Agency to schedule inspections. The Contractor shall make adequate arrangement with the Owner's Testing Agency for inspection of material stockpiles and facilities. Inspection or testing by the Owner does not relieve the Contractor of his responsibility to perform the Work in accordance with the Contract Documents. Tests not specifically indicated to be done at the Owner's expense, including retesting of rejected materials and installed work, shall be done at the Contractor's expense. See Testing Laboratory section of the Specifications.

E. Acceptance Criteria for Concrete Strength: The strength level of an individual class of concrete shall be considered satisfactory if both the following requirements are met:

1. The average of all sets of three consecutive strength tests equal or exceed the required f'c.
2. No individual strength test falls below the required f'c by more than 500 psi.
3. A strength test shall be defined as the average strength of two 6" x 12" cylinder breaks or three 4" x 8" cylinder breaks tested at the strength age indicated on the drawings for that class of concrete.

F. Responsibility for Selection and Use of Concrete Admixtures and Chemical Treatments: The Contractor shall be responsible for selecting admixtures and surface treatments that are compatible with the intended use of the concrete including all final surface treatments called for within this or other specifications or on the structural or architectural drawings. The Contractor is responsible for following the manufacturer's instructions for the use of their product including abiding by any limitations placed by the manufacturer on the use of any of its products.

G. Responsibility for Design of Formwork: The General Contractor is responsible for the design, construction, and safety of all formwork. The General Contractor shall employ a professional engineer who is licensed in the state where the project is located and is experienced in the design of formwork to design all formwork and formwork removal. Forms shall be designed to withstand all loads imposed while in place including wet weight of concrete, construction equipment, live loads, and lateral loads due to wind and wet concrete imbalance.

The General Contractor is responsible for determining when forms and other temporary supports may be removed.

H. Survey for Anchor Rods: The Contractor shall use a qualified land surveyor to lay out the proper location of all embedded anchor rods for columns above before they are encased in concrete. The surveyed locations of such elements shall be submitted to the Architect / Engineer for record.

1.05 PREINSTALLATION CONFERENCES

A. Pre-Concrete Conference

1. At least 7 days prior to beginning concrete work, the Contractor shall conduct a meeting to review the proposed mix designs and to discuss required methods and procedures to produce concrete construction of the required quality. Also review requirements for submittals, status of coordinating work and availability of materials. Establish work progress schedule and procedures for materials inspection, testing and certifications. The contractor shall send a pre-concrete conference agenda to all attendees 7 days prior to the scheduled date of the conference.
2. The Contractor shall require responsible representatives of every party who is concerned with the concrete work to attend the conference, including but not limited to the following: Contractor's Superintendent Laboratory responsible for the concrete design mix Laboratory responsible for field quality control Concrete Subcontractor Ready-Mix Concrete Producer Owner's and Architect's / Engineer's Representative
3. Minutes of the meeting shall be recorded, typed and printed by the Contractor and distributed by him to all parties concerned within 5 days of the meeting. One copy of the minutes shall be transmitted to the following for information purposes: Owner's Representative Architect / Engineer-of-Record.
4. The Engineer shall be present at the conference. The Contractor shall notify the Engineer at least 7 days prior to the scheduled date of the conference.

1.06 SUBMITTALS

A. Shop Drawings: Submit shop drawings for all reinforcing steel and related accessories for the Engineer's approval. Shop drawings shall show arrangement and layout, bending and assembly diagrams, bar schedules, stirrup spacing, splicing and laps of bars and shall be prepared in accordance with CRSI Standards. Submit details for steel templates that are to be used when placing dowels for columns, plinths, or pilasters out of foundation elements or for placing anchor rods for structural steel members.

B. Product Data: Submit manufacturer's product data with application and installation instructions for proprietary materials and items, including admixtures, patching compounds, epoxies, grouts, waterstops, joint systems, curing compounds, dry-shake finish materials, hardeners, sealers, mechanical splices, hooked anchorage systems, dowel bar substitute systems, dowel bar sleeves, and others as requested by Architect / Engineer.

C. Samples: Submit samples of materials specified if requested by Architect/ Engineer, including names, sources and descriptions.

D. Mix Designs: Submit mix designs as specified herein.

E. Material and Mill Certificates: Provide material and mill certificates as specified herein and in the Testing Laboratory section of the Specifications. The Manufacturer and Contractor shall sign the material and mill certificates certifying that each material item complies with specified requirements. Provide certification from admixture manufacturers that chloride ion content complies with specified requirements.

F. Formwork Drawings: Formwork drawings, prepared under the supervision and sealed by a registered professional engineer in the state where the project is located, shall be submitted for Owners record and shall be reviewed by the Engineer for conformance to structural layout only. The professional engineer shall submit calculations for record purposes only for all concrete formwork. Such shop drawings shall indicate types of materials, sizes, lengths, connection details, design allowance for construction loads, anchors, form ties, braces, construction joints, reveals, camber, openings, formwork coatings and all other pertinent information.

G. International Conference of Building Official (ICBO) Technical Reports: Submit technical reports of approval from ICBO for mechanical splice hooked anchorage systems, and dowel bar substitute systems.

H. Construction Joints: Submit drawing of proposed construction joint locations in concrete for slab on grade, mat foundations, and walls. Submit any additional or changed reinforcing that is required at construction joints that differs from that shown on the drawings.

I. Minutes of preconstruction conference.

J. Surveys: Submit reports certifying that all anchor rods for columns above are in their proper location prior to placing of concrete.

1.07 PROVISION FOR OTHER WORK

A. Provide for installation of inserts, hangers, metal ties, anchors, bolts, angle guards, dowels, thimbles, slots, nailing strips, blocking, grounds and other fastening devices required for attachment of work. Properly locate in cooperation with other trades and secure in position before concrete is poured. Do not install sleeves in any concrete slabs except where shown on the drawings or upon written approval of the Architect / Engineer.

B. Protect adjacent finish materials against damage and spatter during concrete placement.

PART 2 – PRODUCTS

2.01 CONCRETE MATERIALS

A. Portland Cement: ASTM C 150, Type I or Type III, or ASTM C 1157, Type GU or HE unless otherwise approved by the Architect/Engineer.
   1. Use one brand of cement, for each class of concrete, throughout the project, unless approved otherwise by the Architect / Engineer and the Owner's Testing Laboratory. Submit mill certificates certifying conformance to this specification for each brand and type of cement.
   2. Testing of cement in lieu of mill certificate submittal will be required if:
      a. The cement has been in storage at the mixing site for over 30 days
      b. It is suspected by the Owner, Architect, Engineer or Owner's Testing Laboratory that the cement has been damaged in storage or in transit or is in any way defective.

B. Low-alkali cement: Cement that has the additional requirement that equivalent alkalis (Na2O + 0.658K2O) do not exceed 0.60% according to ASTM C 150-00, Table 2.

C. Fly Ash: ASTM C 618, Class C or F.

D. Normal Weight Aggregates: ASTM C 33 and as herein specified. Submit material certificates from aggregate supplier or test results from an independent testing agency certifying conformance to this specification for each source of aggregate.
   1. If required by the provisions of this specification in the section entitled "Proportioning and Design of Concrete Mixes", submit certification that aggregate does not contain any deleterious materials that react with alkalis in the concrete mix to cause excessive expansion of the concrete for concrete that is exposed to wetting, has extended exposure to humid atmosphere, or is in contact with moist ground. This includes the following locations in this project:

E. Water: Comply with the requirements of ASTM C 1602.

F. Air-Entraining Admixture: ASTM C 260. Provide air entrainment as specified in Table 4.2.2.4.of ACI 301-05 in all concrete exposed to freezing and thawing. Interior steel troweled surfaces subjected to vehicular traffic shall not have more than 3% entrained air. Surfaces scheduled to receive hardeners shall not have more than 3% entrained air.
   1. Subject to compliance with requirements, provide one of the following products and manufacturers:
      a. "Darex-" or "Daravair" series; W. R. Grace & Co.
      b. "MBAE90" or "Micro-Air"; BASF Admixtures, Inc.
      c. "Sika AER"; Sika Corporation
      d. "Air Mix" or "AEA-92"; The Euclid Chemical Company, Inc.
      e. "Euconl Air 30" or "Euconl Air 40", The Euclid Chemical Co., Inc.
   2. Submit manufacturer's certification that product conforms to the requirements specified and is compatible with all other admixtures to be used.

G. Water-Reducing Admixture: ASTM C 494, Type A. See maximum permissible chloride ion content in concrete specified below.
   1. Subject to compliance with requirements, provide one of the following

products and manufacturers:
a. "Pozzolith 322N" or "Polyheed 997"; BASF Admixtures, Inc.
b. "Plastocrete 161"; Sika Chemical Corp.
c. "Eucon WR-75 or WR-91"; The Euclid Chemical Company, Inc.
d. "WRDA" series; W.R. Grace & Co.
e. “Eucon NW” or “Eucon LW”, The Euclid Chemical Co., Inc.

2. Submit manufacturer's certification that product conforms to the requirements specified and is compatible with all other admixtures to be used.

H. Mid-Range Water-Reducing Admixture: ASTM C 494, Type A and Type F. See maximum permissible chloride ion content in concrete specified below.
1. Subject to compliance with requirements, provide one of the following products and manufacturers:
a. “Polyheed 997”, BASF Admixtures, Inc.
b. “Eucon MR”, The Euclid Chemical Company, Inc.
c. “Sikament HP”, Sika Chemical Corp.
d. ‘Daracem” or “Mira” series, W.R. Grace & Co.
e. “Eucon X15” or “Eucon X20”, The Euclid Chemical Co., Inc.
2. Submit manufacturer's certification that product conforms to the requirements specified and is compatible with all other admixtures to be used.

I. High-Range Water-Reducing Admixture (Superplasticizer): ASTM C 494, Type F or Type G. See maximum permissible chloride ion content in concrete specified below.
1. Subject to compliance with requirements, provide one of the following products and manufacturers:
a. "ADVA" or "Daracem"; W.R. Grace & Co.
b. "Rheobuild 1000" or "Glenium 30/30"; BASF Admixtures, Inc.
c. "Sikament"; Sika Chemical Corp.
d. "Eucon 37/1037” or “Plastol" series; The Euclid Chemical Company, Inc.; “Eucon SP” or “Eucon RD”, The Euclid Chemical Co., Inc.
2. Submit manufacturer's certification that product conforms to the requirements specified and is compatible with all other admixtures to be used.

J. Corrosion Inhibitor: Amine-Ester type Products:
1. Subject to compliance with requirements, provide the following at dosage rates per manufacturer’s recommendation:
a. "Rheocrete 222+", BASF Admixtures, Inc.

K. Calcium Chloride and Chloride Ion Content:
1. Calcium chloride or admixtures containing more than 0.5% chloride ions by weight of the admixture are not permitted.
2. The maximum water-soluble chloride ion concentration in hardened concrete aged from 28 to 42 days contributed from all ingredients including water, aggregates, cementitious materials, and admixtures shall not exceed the limits specified in ACI 301-05 Table 4.2.2.6. Water-soluble chloride ion tests shall conform to ASTM C 1218. One test shall be run for each class of concrete before the mix design submittal and each time a change is made to the mix design (such as change in aggregate type or source).

3. The Concrete Supplier shall certify on the Mix Design Submittal Form that the chloride ion content in all concrete mix designs used on the project will not exceed limits stated above.

L. Certification: Written conformance to all the above mentioned requirements and the chloride ion content of the admixture as tested by an accredited laboratory will be required from the admixture manufacturer at the time of mix design review by the Engineer.

2.02 REINFORCEMENT MATERIALS

A. Reinforcement:

1. Reinforcing materials shall be delivered from the mill in bundles that are identified as to heat number and manufacturer and accompanied with mill and analysis test reports and an affidavit from the supplier stating that the material conforms with the requirements of the governing ASTM specification listed herein.
2. Deformed bar material that is not identifiable according to the criteria listed above shall be tested for tensile strength and bend tests according to ASTM A 615 on a sample of 2 bars for each ten tons or fraction thereof of unidentified material for each bar size. The bars shall be a minimum of 24 inches long. Bend tests are not required for #14 and # 18 bars. Submit the results of such tests for record.
3. Reinforcing Steel: Reinforcing steel shall conform to ASTM A 615 Grade 60 as noted on the drawings.
4. Weldable Reinforcing Steel: All reinforcing steel required to be welded shall conform to ASTM A 706.
5. Deformed Bar Anchors: Deformed Bar Anchors shall conform to ASTM A 496 with a minimum yield strength of 75,000 PSI. Standard ASTM A 615 Grade 60 or Grade 40 reinforcing bars may not be substituted for deformed bar anchors.
6. Plain Steel Welded Wire Fabric: Not permitted.
7. Joint Dowel Bars: Smooth bars used to dowel across slab-on-grade construction joints shall conform to ASTM A 615, Grade 40 or A36, plain-steel bars. Cut bars true to length with ends square and free of burrs.
8. Dowel Bar Sleeves: Plastic or gage metal (26 ga. min.) sleeves with an inside diameter of 1/16 inch greater than the dowel bar that it encases, that have the strength, durability, and design to provide free movement of the dowel relative to the concrete slab and that are specifically manufactured for this purpose.
9. Alternate Slab-on-Grade Joint Load Transfer Systems: A system that consists of flat, ASTM A 36 plate that is saw cut into a square or rectangular shape and is embedded into or encased by a plastic sleeve that allows movement in both lateral directions but not in the vertical direction. Acceptable systems are manufactured by PNA Construction Technologies with products known by the names “Diamond Dowel System” and “PD3 Basket” and Greenstreak Group Inc. with products known as “Speed Plate’ and “Double-Tapered Basket”.
10. Tie Wire: Tie wire shall be annealed steel tie wire, minimum 16 gauge. Provide only plastic coated or stainless steel tie wire in exposed concrete structures and all architectural concrete.

B. Supports for Reinforcement: Provide supports for reinforcement including bolsters, chairs, spacers and other devices for spacing, supporting and fastening reinforcing bars and in place. Use wire bar type or all plastic supports complying with CRSI recommendations.
   1. Slabs-on-Grade: Use precast concrete bar supports (dobies) or supports with sand plates or horizontal runners designed for use on ground.
   2. Spread Footing Bottom Reinforcement: Use precast concrete bar supports (dobies) or chairs designed for soil-supported slabs.

2.03 SPLICES

A. Mechanical Tension Splices: Mechanical splices shall conform to Type 1 splices in accordance with ACI 318-05, ch. 21 as expressed in an ICC-Evaluation Service Evaluation Report. The bar ends that are to attach to the splice shall be prepared and installed in accordance with the manufacturer's requirements. Splices shall be approved by the ICC-Evaluation Service, Inc and shall have the Evaluation Report submitted for Engineer review. The following are acceptable mechanical tension splices (splices qualified for use with grade 75 bars are parenthetically noted):
   1. "BarLock, S-Series", Dayton/Richmond.
   2. "US/MC-SAE Mechanical Coupler", Dayton/Richmond, Inc.
   3. "DB Grout Sleeve", Dayton/Richmond
   4. "ZAP Screwlok", BarSplice Products, Inc (qualified for use with grade 75 bars)
   5. "BPI Grip XL System", BarSplice Products, Inc.
   6. "Taper Threaded Grip Twist System, ", BarSplice Products, Inc.
   7. "Lenton Coupler", Erico Products, Inc. (for grade 75 bars, use only "Standard Coupler")
   8. "NMB Splice Sleeve", Splice Sleeve North America" (qualified for grade 75 #7 bars and higher)
   9. "BarLock, L-Series", Dayton Superior
   10. "Taperlok Couplers", Dayton Superior
   11. "Lenton Interlok", Erico Products, Inc.
   12. "Griptec", Dextra Manufacturing Co.,
   13. Or other Engineer-approved product.

B. Splice Type and Lap Lengths: Required splice type and lap lengths are defined on the drawings. Lap splice lengths for unscheduled bars not shown otherwise on the drawings shall be 30 bar diameters minimum.

C. Dowel Bar Replacement: All grade 60 reinforcing steel dowel bars shown on the drawings crossing concrete construction joint surfaces with inserts cast flush against the form and having reinforcing bars connected to the insert in a subsequent concrete pour shall conform to the following:
   1. Splice connection at insert shall develop the full tensile strength of the reinforcing steel conforming to a Type 2 splice in accordance with ACI 318-05, ch. 21.
   2. Splices shall be approved by the ICC Evaluation Service, Inc. and shall have an Evaluation Report submitted for Engineer review.
   3. The following are acceptable products (for use only with grade 60 bars):
      a. "Lenton Form Saver", , Erico Products, Inc.

b. "DB-SAE Dowel Bar Splicer", Dayton/Richmond, Inc.
c. Or other Engineer-approved product.

D. Hooked Anchorage Replacement: Reinforcing bar terminations shall be manufactured out of ASTM A 576 material and shall develop the full tensile strength of the bar when installed at the manufacturer's recommended depth. The Anchorage shall be approved by the ICC Evaluation Service and shall have an Evaluation Report submitted for Engineer review. The following are acceptable products (for use only with grade 60 bars):
1. "Lenton Terminator", Erico Products, Inc.
2. Or other Engineer-approved product.

2.04 FORMWORK MATERIAL

A. Rough-formed finished concrete: Unless otherwise specified, the default finish for formed surfaces shall be rough-form finish constructed with plywood, lumber, metal or other acceptable material. Lumber shall be dressed on at least two edges and one side for tight fit. The minimum grade shall be B-C, exterior grade.

B. Nails and Fasteners: Use only galvanized nails and fasteners for securing formwork in structures exposed to weather or unconditioned spaces such as garages, canopies and porte-cocheres.

C. Form Ties: Factory-fabricated, removable or snap-off metal or glass-fiber-reinforced plastic form ties designed to resist lateral pressure of fresh concrete on forms and to minimize spalling of concrete on removal.
1. Exposed Surfaces: For surfaces designated with Class A and B finish tolerances, furnish units that will leave no portion of the tie closer than 3/4 inch to the plane of the concrete surface and that will leave holes not larger than 1 inch in diameter in concrete surface when the ends or end-fasteners have been removed.
2. Dampproofed Surfaces: Furnish ties with integral water-barrier plates to walls indicated to receive dampproofing or waterproofing.
3. Exposed to Weather or Unconditioned Space: Provide removable, glass-fiber-reinforced plastic, stainless steel, or galvanized form ties that will leave no corrodible metal closer than 1 1/2 inches in surfaces that will be exposed to weather or in an unconditioned space in the final structure. The ties shall leave holes no larger than 1 inch in diameter in concrete surfaces when the ends or end-fasteners are removed.

D. Chamfer Strips: Provide wood, metal, PVC, or rubber strips, ¾ by ¾ inch, minimum.

E. Formwork Coatings: Formwork coatings shall be not a commercial formulation that will not bond with, stain, nor adversely affect concrete surfaces or impair subsequent treatment of concrete surfaces requiring bond or adhesion, nor impede curing with water or curing compounds. Provide a product that has a maximum VOC (Volatile Organic Compounds) of 450 g/l but not greater than that permitted by the local government agency having jurisdiction in the area where the project is located. Products: Subject to compliance with requirements, provide one of the following:

1. "Enviroform", Conspec Marketing and Manufacturing Co., Inc.
2. "Cast-Off WB", Sonneborn Building Products
3. “Farm Fresh”, Unitex
4. "Formshield WB"; Tamms Industries
5. “Form-Eze Natural”, The Euclid Chemical Company, Inc.
6. “Bio-Form”, Universal Form Clamp
7. “Aqua Blue”, US Spec

2.05 RELATED MATERIALS

A. Waterstops: Provide waterstops at all construction joints and other joints in all foundation walls below grade and where shown on the drawings. Size to suit joints. Provide flat, dumbbell type or centerbulb type.
   1. Polyvinyl chloride (PVC) waterstops: Corps of Engineers CRD-C 572. Manufacturers: Subject to compliance with requirements, provide products of one of the following:
      a. BoMetals, Inc.
      b. Greenstreak Group, Inc.
      c. Progress Unlimited, Inc.
      d. Vinylex Corp.
      e. Paul Murphy Plastics, Co.
      f. Sternson Group
      g. Tamms Industries Co.; Div. Of LaPorte Construction Chemicals of North America, Inc.
      h. Westec Barrier Technologies; Div. Of Western Textile Products, Inc.
   2. Sodium Bentonite with Butyl Rubber: Volclay Waterstop RX manufactured by Cetco Building Materials Group

B. Vapor Retarder: Provide vapor barrier chosen from products specified below over prepared base material where indicated.
   1. Plastic Vapor Barrier: Provide a flexible, preformed sheet membrane conforming to ASTM E 1745 with the following properties.
      a. Class C material
      b. Minimum of 10 mils thick
      c. Maximum water vapor permeance rating of 0.04 as tested by ASTM E 96
      d. Acceptable products include the following:
         1) "Stego Wrap Vapor Barrier (10 mil)", Stego Industries, LLC
      e. Refer to Specification Section 07 26 16 for additional information
   2. Tape for Plastic Moisture Retarders: High-density polyethylene tape with pressure sensitive adhesive having a minimum width of 4 inches.

C. Absorptive Cover: Burlap cloth made from jute or kenaf, weighing approximately 9 oz. per sq. yd., complying with AASHTO M 182, Class 2.

D. Moisture-Retaining Cover: One of the following, complying with ANSI/ASTM C 171:
   1. Waterproof paper.
   2. Polyethylene film.
   3. Polyethylene-coated burlap.
   4. Polyethylene-coated natural cellulose fabric such as “Aquacure” by Greenstreak Group, Inc.

E. Liquid Membrane-Forming Curing and Curing and Sealing Compounds:
1. Water-Based Dissipating Resin Type Curing Compound: Curing Compound shall be a dissipating resin type, which chemically breaks down after approximately 4 weeks. Membrane forming compound shall meet ASTM C 309, Types 1 and 1D Class B.
   a. Products: Subject to compliance with requirements, provide one of the following:
      1) "Kurez DR Vox" or "Kurez W Vox", Euclid Chemical Company
      2) "L&M Cure R", L&M Construction Chemicals
      3) "Horncure WB 30", Tamms Industries
      4) "Hydro Cure 309", Unitex
      5) "Sealtight 1100-Clear", W. R. Meadows
      6) "US Spec Maxcure Resin Clear", US Mix Co.
   b. Submit manufacturer's certification that product conforms to the requirements specified and is compatible with any covering or surface treatments to be applied. Submit any instructions that must be followed prior to any subsequent surface treatments and floor coverings.
2. High Solids, Water-Based, Non-Yellowing Curing and Sealing Compound: Water based membrane-forming curing and sealing compound, acrylic type, complying with ASTM C 1315, Type 1, Class A classified as low odor. Do not apply to surfaces that are to receive subsequent cementitious toppings, sealers, hardeners, ceramic tile, resilient flooring, vinyl-backed carpet, wood, terrazzo, epoxy overlays or adhesives, or other coating or finishing products.
   a. Products: Subject to compliance with requirements, provide one of the following:
      1) "Super Diamond Clear Vox", Euclid Chemical Company
      2) "Lumiseal 30 WB", L&M Construction Chemicals
      3) "Kure 1315", BASF Building Systems
      4) "Hydro Seal 30", Unitex
      5) "Vocomp 30", W. R. Meadows
      6) "US Spec Radiance UV-25", US Mix Co.
      7) "Luster Seal WB 300", Tamms Industries
   b. Submit manufacturer's certification that product conforms to the requirements specified and is compatible with any covering or surface treatments to be applied. Submit any instructions that must be followed prior to any subsequent surface treatments.

F. Evaporation Control: Monomolecular film forming compound applied to exposed concrete slab surfaces for temporary protection from rapid moisture loss in hot weather conditions.
1. Products: Subject to compliance with requirements, provide one of the following:
   a. "Eucobar"; Euclid Chemical Company
   b. "E-Con"; L & M Construction Chemical, Inc.
   c. "Confilm"; BASF Building Systems
   d. "Sure Film (J-74)", Dayton Superior
   e. "SikaFilm", Sika Chemical Co.
   f. "Pro-Film", Unitex
   g. "Sealtight Evapre", W. R. Meadows
   h. "US Spec Monofilm ER", US Mix Co.

2. Submit manufacturer's certification that product conforms to the requirements specified and is compatible with all coverings and surface treatments to be applied. Submit any instructions that must be followed prior to any subsequent surface treatments.

G. Bonding Compound: Polyvinyl acetate or acrylic base, for use in cosmetic and/or nonstructural repairs. Products: Subject to compliance with requirements, provide one of the following:
1. Acrylic or Styrene Butadiene:
   a. "Day-Chem Ad Bond (J-40)"; Dayton Superior
   b. "SBR Latex"; Euclid Chemical Co.
   c. "Daraweld C"; W. R. Grace.
   d. "Acrylic Additive," BASF Building Systems, Inc.
   e. "SikaLatex", Sika Chemical Co.
   f. “Intralok”, W. R. Meadows
   g. “US Spec Acrylcoat”, US Mix Co.
   h. “Akkro 7-T”, Tamms Industries
2. Polyvinyl Acetate (Interior Use Only)
   a. "Euco Weld"; Euclid Chemical Co.
   b. "Everweld"; L & M Construction Chemicals, Inc.
   c. "Superior Concrete Bonder (J-41)," Dayton Superior
   d. “US Spec Bondcoat”, US Mix Co.

H. Epoxy Products: Two component material suitable for use on dry or damp surface, complying with ASTM C 881, for use in all structural concrete repairs.
1. Products for Crack Repair:
   a. "Sikadur 35 Hi Mod LV"; Sika Chemical Company – injection type
   b. "Sikadur 52", Sika Chemical Company – injection type
   c. "Sikadur 55 SLV", Sika Chemical Company – gravity feed
   d. "Eucopoxy Injection Resin," Euclid Chemical Company
   e. "Sure-Inject (J-56)," Dayton Superior
   f. “Epofil SLV”, BASF Building Systems
   g. “ETI-LV” or “ETI-GV”, Simpson Strong-Tie Co., Inc. – injection type
   h. “Pro-Poxy 100 LV” or “Pro-Poxy 50”, Unitex
   i. “Crackbond”, U.S. Anchor Corp.
   j. “Rezi-Weld LV”, W. R. Meadows
   k. “US Spec Maxibond” US Mix Co. – injection or gravity feed
   l. “US Spec Eposeal LVS”, US Mix Co. – gravity feed
   m. “Duralcrete LV”, Tamms Industries
2. Products for Epoxy Mortar Patches:
   a. "Sikadur Lo-Mod LV"; Sika Chemical Corporation.
   b. "Euco 352 LV," Euclid Chemical Company
   c. "Sure Grip Epoxy Grout (J-54)," Dayton-Superior
   d. “Epofil”, BASF Building Systems
   e. “Pro-Poxy 2500”, Unitex
   f. “Rezi-Weld 1000”, W. R. Meadows
   g. “US Spec EPM 3000”, US Mix Co.
   h. “Duralcrete LV”, Tamms Industries

3. Products for Epoxying Steel Plates to Concrete: Conform to ASTM C 881-90, Type IV, Grade 3, Class A, B, & C except gel times.
   a. "Sikadur 31 Hi-Mod Gel"; Sika Corporation

b. "Euclid 452 Gel," Euclid Chemical Company
c. "Sure Anchor I (J-S1)," Dayton Superior
d. "Epo Gel" or "Rapid Gel". BASF Building Systems
e. "Pro-Poxy 200", Unitex
f. "US Spec Gelbond NS" US Mix Co.
g. "Duralcrete Gel", Tamms Industries

4. Products for Adhesive Anchors or Reinforcing Steel in Normal-weight Concrete: Product that conforms to ASTM C 881-02, Type IV, Grade 3, Class A, B, & C except gel times, and that is dispensed from a two-component cartridge system through a mixing nozzle that thoroughly mixes the two components as it is injected into the hole. The product must show approval by the ICC Evaluation Service of having passed Acceptance Criteria 308 as evidenced by an Evaluation Service Report (ESR). Consult with the manufacturer for the minimum temperature of the concrete surface allowed.
   a. Normal-weight concrete:
      1) "HIT-RE 500-SD", Hilti Fastening Systems
      2) "SET-XP" Adhesive", Simpson Strong-tie
      3) "PE 1000+", Powers Fasteners, Inc.
   b. Light-weight Concrete: No approved products
   c. These products may not be used in concrete cast over corrugated deck.
5. Substitutions for products noted in the drawings may be considered provided complete technical information and job references are furnished to the Engineer for approval prior to commencement of work. Failure to obtain approval for anchor substitutions will render the contractor liable for the design and performance of the anchor.

I. Self-Leveling Mortars, Underlayment Compound: Freeflowing, self-leveling, pumpable cementitious base compound.
1. Products: Unless specified otherwise, provide one of the following:
   a. "Sonoflow," BASF Building Systems, Inc.
   b. "Sikatop 111"; Sika Chemical Co.
   c. "Flo-Top" or "Flo-Top 90"; Euclid Chemical Co.
   d. "Levelayer I," Dayton Superior
   e. "US Spec Self-leveling Underlayment" US Mix Co.
   f. "Level Magic", Tamms Industries

J. Polymer Patching Mortar: Polymer and microsilica modified cementitious based compounds.
1. Products:
   a. Horizontal
      1) "Thin Top Supreme, Concrete Top Supreme," Euclid Chemical
      2) "Sikatop 121 or 122," Sika Chemical
      3) "Emaco R310CI," BASF Building Systems
      4) "Sonopatch 100 or 300", BASF Building Systems
      5) "US Spec H2 or NuTop" US Mix Co.
      6) "Speed Crete PM", Tamms Industries
   b. Vertical or Overhead
      1) "Verticoat/Verticoat Supreme," Euclid Chemical
      2) "Sikatop 123," Sika Chemical
      3) "Emaco R350 CI," BASF Building Systems
      4) "Sonopatch 200", BASF Building Systems

5) "US Spec V/O Patch", US Mix Co.
6) "Speed Crete PM", Tamms Industries

K. High Strength Flowing Repair Mortar: For forming and pouring structural members, or large horizontal repairs, provide flowable one-part, high strength microsilica modified repair mortar with 3/8" aggregate. The product shall achieve 9000 psi @ 28-days at a 9- inch slump.
1. Products:
a. "Road Patch", BASF Building Systems
b. "US Spec STR Mortar", US Mix Co.
c. "Eucocrete", Euclid Chemical Co.
d. "Form and Pour", Tamms Industries

L. Anti-Corrosive Epoxy/Cementitious Adhesive: Water-based epoxy/cementitious compound for adhesion and corrosion protection or reinforcing members (20 hour maximum open time).
1. Products:
a. "Corr-Bond," Euclid Chemical Co.
b. "Armatec 110," Sika Chemical Co.
c. "Sonoprep Plus", BASF Building Systems

M. Expansion Anchors in Concrete:
1. ICC Approval: Only anchors evaluated by the ICC Evaluation Service, Inc. (ICCES) with a published Evaluation Report showing having passed Acceptance Criteria 193 and approval for use in cracked concrete and resisting wind and seismic loads shall be approved for use.
2. Type: All expansion anchors in concrete shall be only wedge type expansion, sleeve type expansion or undercut type bolts.
3. Interior Use: All expansion anchors, nuts and washers for use in interior conditioned environments free of potential moisture shall be manufactured from carbon steel zinc plated in accordance with Federal Specification QQ-Z-325C, Type II, Class 3.
4. Exterior or Exposed Use: All expansion anchors, nuts and washers for use in exposed or potentially wet environments, or for attachment of exterior cladding materials shall be galvanized or stainless steel. Galvanized bolts, nuts and washers shall conform to ASTM A153. Stainless steel bolts shall be manufactured from 300 series stainless steel and nuts and washers from 300 series or Type 18-8 stainless steel.
5. Nuts and Washers: Nuts and washers shall be furnished from the manufacturer and used with the bolts.
6. Acceptable Products and Manufacturers – Normal and Lightweight Concrete:
a. "Kwik Bolt TZ", "HDA Undercut Anchor" and "HSL-3 Heavy Duty Sleeve Anchor", Hilti Fastening Systems
b. "Strong-Bolt Wedge Anchor", Simpson Strong-Tie, Co, Inc.
c. "Red Head Trubolt + Wedge Anchor", ITW Red Head, "DUC Undercut Anchor", USP Structural Connectors"Power Stud + SD2", Powers Fasteners, Inc
d. "SRS TZ Carbon Steel Anchor", MKT Metall-Kunststoff-Technik
e. "Torq-Cut Self Undercutting Anchor", Simpson Strong-Tie, Co. Inc. (ESR Pending)
7. Acceptable Products and Manufacturers – Normal and Light Weight

Concrete on Corrugated Deck:
a. "Kwik Bolt TZ", Hilti Fastening System
b. Strong-Bolt Wedge-Anchor", Simpson Strong-Tie, Co, Inc.
c. Power Stud + SD2", Powers Fasteners, Inc.

8. Substitutions for products noted in the drawings may be considered provided complete technical information and job references are furnished to the Engineer for approval prior to commencement of work. Failure to obtain approval for anchor substitutions will render the contractor liable for the design and performance of the anchor.

N. Screw Anchors in Concrete
1. Approvals: Only anchors evaluated by the ICC Evaluation Service, Inc. (ICC-ES) with a published Evaluation Report showing having passed Acceptance Criteria 193 and approved for use in cracked concrete and resisting wind and seismic loads shall be approved for use.
2. Interior Use: All screw anchors for use in interior conditioned environments free of potential moisture shall be manufactured from carbon steel zinc plated in accordance with Federal Specification QQ-Z-325C, Type II, Class 3.
3. Exterior or Exposed Use: All screw anchors for use in exposed or potentially wet environments, or for attachment of exterior cladding materials shall be galvanized or stainless steel. Galvanized anchors shall conform to ASTM A 153. Stainless steel anchors shall be manufactured from 300 series stainless steel.
4. Acceptable Products and Manufacturers – All Conditions:
a. "Titen HD", Simpson Strong-Tie Co., Inc.
b. "Snake+Anchor" Powers Fasteners, Inc.
c. "Wedge-Bolt+", Powers Fasteners, Inc. (greater than ¼ in. diameter)
5. Substitutions for products noted in the drawings may be considered provided complete technical information and job references are furnished to the Engineer for approval prior to commencement of work. Failure to obtain approval for anchor substitutions will render the contractor liable for the design and performance of the anchor.

O. Threaded Rods Chemically Anchored in Concrete
1. Type: Threaded rods installed in holes using a chemical anchoring process shall have a 45º chiseled end on one end.
2. Interior Application: Meet the requirements of ASTM A 307, A 36 or A 193, grade B7.
3. Exterior Application: Meet the requirements of ASTM A 153 galvanized steel, or F 593, Group 1 or 2, condition CW stainless steel.

P. Reglets: Where resilient or elastomeric sheet flashing or bituminous membrane is terminated in reglets, provide reglets of not less than 26 gage galvanized sheet steel. Fill reglet or cover face opening to prevent intrusion of concrete or debris.

Q. Contraction and Construction Joint-Filler Material for Slabs-on-Grade: Provide a 2- component semi-rigid, 100% solids epoxy having a minimum shore A hardness of 75 when tested in accordance with ASTM D 2240. Subject to compliance with requirements, provide one of the following:
1. "Euco 700", Euclid Chemical Co., Inc.
2. "Spec-Joint CJ"; Conspec Marketing and Manufacturing Co., Inc.
3. "Masterfill 300 I", BASF Building Systems

4. "MM-80", Metzger/McGuire Co.
5. "Rezi-Weld Flex", W. R. Meadows
6. "US Spec SR-50 EJF", US Mix Co.

R. Joint-Filler Strips for Isolation Joints in Slabs-on-Grade: ASTM D 1751, asphaltsaturated cellulosic fiber, or ASTM D 1752, cork or self-expanding cork

S. Bondbreaker for Construction Joints in Slabs-on-Grade: A dissipating bondbreaking compound containing no silicones, resins, or waxes, and that conforms to ASTM C 309. Subject to compliance with requirements, acceptable manufacturers include the following:
1. "Sure-Lift", Dayton Superior Corporation, Inc.
2. "Tilt-Eez", Conspec Marketing and Manufacturing Co., Inc.

2.06 PROPORTIONING AND DESIGN OF CONCRETE MIXES

A. The Contractor shall submit for approval by the Engineer and Owner's Testing Laboratory, at least 15 working days prior to the start of construction, concrete mix designs and the Concrete Mix Design Submittal Form located at the end of this specification section for each class of concrete indicated on the structural drawings and in the Specifications. If required, the Contractor shall engage the services of an independent Testing Laboratory to assist in preparing the mix design. The Contractor shall not begin work with a particular mix until that mix design has been approved.

B. The Contractor, acting in conjunction with his Concrete Supplier and his Testing Laboratory, shall submit in writing, with his mix designs, the method used to select mix proportions. Either of the following methods, as outlined in ACI 301, may be used.
1. Field Experience Method
2. Laboratory Trial Mixture Method

C. Required types of concrete and compressive strengths shall be as indicated on the Structural Drawings.

D. All mix designs shall state the following information:
1. Mix design number or code designation by which the Contractor shall order the concrete from the Supplier.
2. Structural slab or member for which the concrete is designed (i.e. columns, shear walls, footings, slab on grade, etc.).
3. Wet and dry unit weight.
4. 28 day compressive strength.
5. Aggregate type, source, size, gradation, fineness modulus.
6. Cement type and brand.
7. Fly ash or other pozzolan type and brand (if any).
8. Admixtures including air entrainment, water reducers, high-range water reducers, accelerators, and retarders.
9. Design Slump or Slump/Flow.
10. Proportions of each material used.
11. Water / Cementitious ratio and maximum allowable water content.
12. Method by which the concrete is intended to be placed (bucket, chute, or pump).

13. Required average strength qualification calculations per ACI 301 4.2.3.3a and 4.2.3.3b. Submit separate qualification calculations for each production facility that will supply concrete to the project.
14. Documentation of Average strength (trial mix data or field test data) per ACI 301: When field test data is used to qualify average strength, submit separate documentation for each production facility that will supply concrete to the project.
15. Field test data submitted for qualification of average strength under ACI 301 shall include copies of the Concrete Testing Agency's reports from which the data was compiled.
16. All other information requested in the Concrete Mix Design Submittal Form located at the end of this specification section.

E. Low Alkali Concrete: The total alkali contribution from cementitious materials in the concrete mix shall not exceed 4.0 pounds per cubic yd of concrete unless the aggregate used is certified to contain no deleterious materials that react with alkalis in the concrete mix as defined in ASTM C 33. This requirement may be met by the use of low-alkali cement.

F. Supplementary Cementitious Materials: Fly ash replacement of Portland cement shall not exceed 25% unless otherwise approved. If fly ash is used, it must be at a minimum fly ash replacement level of 15%. Approval for higher levels will be based on showing experience of satisfactory performance on other projects using materials from identical sources as proposed for this project. Submit evidence of such experience on other projects.

G. Aggregate: Comply with the following special requirements:
1. For slabs and other designated concrete, combined aggregate gradation shall be 8% - 18% for large top size aggregates (1 1/2 in.) or 8% - 22% for smaller top size aggregates (1 in. or 3/4 in.) retained on each sieve below the top size and above the No. 100. Deviations from this gradation may be allowed upon the approval of the Engineer subject to the following limitations:
   a. The percent retained on two adjacent sieves shall be not less than 5%.
   b. The percent retained on three adjacent sieves shall be not less than 8%
   c. If the percent retained on two adjacent sieves is less than 8%, the total percent retained on either of those sieves and the adjacent outside sieve shall be not less than 13 %

H. Admixtures:
1. Admixtures to be used in concrete shall be subject to the approval of the Engineer and Owner's Testing Laboratory and shall be used for the purpose intended by the manufacturer to produce concrete to meet the specified requirements.
2. Quantities of admixtures to be used shall be in strict accordance with the manufacturer’s instructions.

I. Adjustments of Concrete Mixes: Mix design adjustments may be requested by the Contractor when characteristics of materials, job conditions, weather, test results, or other circumstances warrant. Such mix design adjustments shall be provided at no additional cost to the Owner. Any adjustments in approved mix

designs including changes in admixtures shall be submitted in writing with the specified Concrete Mix Design Submittal Form to the Engineer and Owner's Testing Laboratory for approval prior to field use.

J. Chloride Ion Content: A written submittal shall be made with each mix design proposed for use on the project that the chloride ion content from all ingredients including admixtures will not exceed the limits specified in this section of the Specifications.

2.07 CONCRETE MIXES

A. Ready-Mix Concrete: Comply with requirements of ANSI/ASTM C 94, "Ready Mixed Concrete" and Testing Laboratory section of the specifications.

PART 3 – EXECUTION

3.01 FABRICATION AND CONSTRUCTION OF FORMWORK

A. Design, erect, support, brace and maintain formwork, according to ACI 301, to support vertical, lateral, static, and dynamic construction loads that might be applied until the concrete structure can support such loads.

B. Construct formwork so concrete members and structures are of correct size, shape, alignment, elevation and position. Maintain formwork construction tolerances complying with ACI 117.

C. Construct forms to sizes, shapes, lines and dimensions shown, and to obtain accurate alignment, location, grades, level and plumb work in finished structures. Provide for openings, offsets, sinkages, keyways, recesses, moldings, rustications, reglets, chamfers, blocking, screeds, bulkheads, anchorages and inserts and other features required in work. Use selected materials to obtain required finishes. Solidly butt joints and provide back-up at joints to prevent leakage of cement paste.

D. Fabricate forms for easy removal without hammering or prying against concrete surfaces. Provide crush plates or wrecking plates where stripping may damage cast concrete surfaces. Provide top forms for inclined surfaces steeper than 1.5 horizontal to 1 vertical. Kerf wood inserts for forming keyways, reglets, recesses, and the like, to prevent swelling and for easy removal.

E. Set edge forms, bulkheads, and intermediate screed strips for slabs to achieve required elevations and slopes in finished concrete surfaces. Provide and secure units to support screed strips; use strike-off templates or compacting-type screeds.

F. Provide temporary openings where interior area of formwork is inaccessible for cleanout, for inspection before concrete placement, and for placement of concrete. Securely brace temporary openings and patch forms to prevent loss of concrete mortar. Locate temporary openings on forms at inconspicuous locations.

G. Chamfer exposed corners and edges as indicated, using specified chamfer strips

fabricated to produce uniform smooth lines and tight edge joints.

H. Provisions for Other Trades: Provide openings in concrete formwork to accommodate work of other trades. Determine size and location of openings, recesses and chases from trades providing such items. Accurately place and securely support items built into forms.

3.02 CLEANING AND TIGHTENING

A. Thoroughly clean forms and adjacent surfaces to receive concrete. Remove chips, wood, sawdust, dirt, and all other debris just prior to concrete placement. Retighten forms and bracing prior to concrete placement as required to prevent mortar leaks and maintain proper alignment.

3.03 CLEANING AND RE-USE OF FORMS

A. Forms reused in the work shall be repaired and cleaned. Split, frayed, delaminated, or otherwise damaged facing material will not be acceptable for exposed surfaces. Forms intended for successive concrete placement shall have surfaces cleaned, fins and laitance removed, and joints tightened to avoid surface offsets. New form coating compound shall be applied to reused forms. Thin form-coating compounds only with thinning agent of type, and in amount, and under conditions of form-coating compound manufacturer's directions. Do not allow excess form-coating material to accumulate in forms or to come into contact with in-place concrete surfaces against which fresh concrete will be placed. Apply in compliance with manufacturer's instructions. Coat steel forms with a non-staining, rust-preventative form oil or otherwise protect against rusting. Rust-stained steel formwork is not acceptable.

3.04 TOLERANCES

A. Unless specified otherwise, all tolerances for concrete formwork shall conform to ACI Standard 117, "Standard Tolerances for Concrete Construction and Materials". Before concrete placement the Contractor shall check lines and levels of erected formwork and make any corrections and adjustments as required to ensure proper size and location of concrete members and stability of forming systems. During concrete placement the Contractor shall check formwork and supports to ensure that forms have not displaced and that completed work will be within specified tolerances.

B. Construct forms so as to limit the offset between adjacent pieces of formwork facing material in accordance with the following classifications as defined in ACI 117. The offset limits shall apply to both abrupt and gradual variations in the surface.
   1. Class C, ½ inch, other surfaces exposed to view but not scheduled to receive other finishes.
   2. Class D, 1 inch, all other surfaces.

3.05 REMOVAL OF FORMS AND SUPPORTS

A. Records of Weather Conditions: The General Contractor shall be responsible for keeping records of weather conditions to be used in the decision on when to

remove forms.

B. Formwork Not Supporting Concrete: Formwork not supporting concrete such as sides of walls and similar parts of the structure, may be removed after cumulatively (not necessarily consecutively) curing at not less than 50°F for 12 hours after placing concrete, provided the concrete is sufficiently hard so as not to be damaged by form removal operations and provided curing and protection operations are maintained. If ambient air temperatures remain below 50°F, if retarding agents are used, or if Type II and Type V Portland cement is used, then this specified minimum period should be increased as required to safely remove the forms without damage to the concrete. Where such forms also support formwork for slab or beam soffits, the removal times of the latter shall govern.

3.06 FABRICATION AND DELIVERY OF REINFORCEMENT

A. Bending and Forming: Fabricate bars of indicated sizes and accurately form to shapes and lengths indicated and required, by methods not injurious to materials. Do not heat reinforcement for bending. Bars shall be free from injurious defects, have a workmanlike finish with no excessive rust and/or pitting and have no unusual kinks or bends.

B. Marking and Shipping: Bundle reinforcement and tag in accordance with section 7.4.5 of the CRSI “Manual of Standard Practice”. Transport and store at site so as not to damage material. Keep sufficient supply of tested, approved and proper reinforcement at the site to avoid delays. Maintain reinforcing bars free of mud, dirt, grease, or other coating.

3.07 PLACING REINFORCEMENT

A. Comply with Concrete Reinforcing Steel Institute's recommended practice for "Placing Reinforcing Bars", for details and methods of reinforcement placement and supports and as herein specified.

B. Before placing and again before concrete is placed, clean reinforcement of loose rust and mill scale, earth, ice and other materials which reduce or destroy bond with concrete

C. Accurately position, support and secure reinforcement against displacement by formwork, construction, or concrete placement operations. Locate and support reinforcing by chairs, runners, bolsters, spacers and hangers, as required. Exercise particular care to maintain proper distance and clearance between parallel bars and between bars and forms. Provide metal spreaders and spacers to hold steel in position. Support steel at proper height upon approved chairs.

D. Place reinforcement to obtain at least minimum coverage for concrete protection. Arrange, space, and securely tie bars and bar supports to hold reinforcement in position during concrete placement operations. Set wire ties so ends are directed into concrete, not toward exposed concrete surfaces.

E. Support of Spread Footing Reinforcing Steel
1. Bottom Steel: Support bottom reinforcing mat to provide the specified clearance to the bars. Spacing between supports shall not exceed 4'-0"

centers each way.

2. Top Steel: Support top reinforcing on steel angle frames braced in both directions or on special standee support bars. Spacing between supports shall not exceed 4'-0" centers each way. The depth of the supports shall provide the specified clearance from the bars to the top of the concrete. The design of the support steel shall be the responsibility of the Contractor.

F. Coordinate with other trades and expedite materials and labor to avoid omissions and delay.

G. Install waterproof membrane or vapor barrier as specified prior to placing steel for concrete slabs-on-grade.

H. Extend reinforcement continuous through construction joints unless otherwise shown on the drawings or, if approved on the shop drawings, provide dowels of sufficient length to develop the full tension or compression strength of the bar as applicable.

I. Slab-on-Grade Joint Dowel Bars: Support slab-on-grade joint dowel bars independently of support for slab reinforcement on soil supported slab bolsters or specially manufactured cradles such that dowel bar remains parallel to slab surface and at right angles to joint during concreting operations. Lightly coat the exposed end of the dowel with a paraffin-base lubricant, asphalt emulsion, form oil, or grease or use a dowel bar sleeve specifically manufactured for the purpose of preventing a bond between the dowel and the concrete.

J. Alternate Slab-on-Grade Joint Load Transfer Systems: Install the load transfer system in accordance with the manufacturer's direction such that the horizontal plane of the flat plate is parallel to the plane of the subgrade on which the slab is bearing.

K. Provide and place additional reinforcing steel at all sleeves and openings in beams, slabs and walls as specified on the drawings. Where sleeves or openings not shown on the drawings interrupt the reinforcement, consult with Engineer for instructions for placing and splicing of bars. Provide required additional reinforcing steel at no additional cost to the Owner.

3.08 SPLICING REINFORCING STEEL

A. Provide splice type (tension lap splice, compression lap splice, compression end bearing splice, or mechanical anchorage tension splice) as indicated on the drawings. Splice reinforcing bars only at locations shown on the structural drawings and approved shop drawings. Unauthorized or unscheduled splices not approved by the Engineer in writing will not be accepted.

B. All lap splices in reinforcing steel shall be contact lap splices unless detailed otherwise on the drawings.

C. Maintain proper cover between reinforcing bars at splices.

D. Lap unscheduled reinforcing bars not otherwise specified a minimum of 30 bar diameters at splices.

E. Manufacturer of mechanical tension splice should be present for first day's installation.

3.09 WELDING REINFORCING STEEL

A. Welding reinforcing steel is permitted only where specifically shown on the drawings. All welding shall conform to AWS D1.4 "Structural Welding Code - Reinforcing Steel". Only weldable reinforcing steel conforming to ASTM A 706 or deformed bar anchors conforming to ASTM A 496 shall be permitted. ASTM A 615 bars may not be welded for structural use.

B. Tack welding of reinforcement shall only be allowed for preassemble mats and cages.

3.10 SLUMP LIMIT

A. The slump, as measured in the field where concrete cylinders are taken, shall be within plus or minus 1 inch of the design slump noted on the Mix Design Submittal Form. Water may be added to the concrete in the field only to the extent that the prescribed water/cementitious ratio noted in the Mix Design Submittal Form is not exceeded.

3.11 VAPOR BARRIER INSTALLATION

A. Install vapor barrier in accordance with ASTM E 1643 and manufacturer’s instructions.

B. Seal all joints in the field with the specified pressure sensitive tape. Heat-welded joints done in a shop prior to delivery is an acceptable method to minimize the number of field joints.

C. Seal all pipe penetrations through the moisture retarder with a boot made from the moisture retarder material and tape.

3.12 JOINTS IN CONCRETE

A. Construction Joints: Locate and install construction joints as indicated on the drawings or if not shown on drawings, located so as not to impair strength and appearance of the structure, as acceptable to Architect/Engineer.
   1. Keyways: Provide keyways with a depth of one tenth of the member thickness (1 1/2" minimum or as shown on the drawings) in construction joints only where shown on the drawings.
   2. Joint Construction: Place construction joints in the center one third of grade beams and as shown on the drawings for slabs-on-grade and walls unless shown otherwise. Offset joints in girders a minimum distance of twice the beam width from a beam-girder intersection. Place joints perpendicular to main reinforcement. Continue reinforcement across construction joints unless otherwise shown on the drawings. Dowels that cross construction joints shall be supported during concreting operations so as to remain parallel with the slab or wall surface and at right angles to the joint. Submit all construction joint locations as a shop drawing submittal.

3. Waterstops: Provide waterstops in construction joints as indicated on the Architectural and Structural Drawings. Install waterstops to form continuous diaphragm in each joint. Make provisions to support and protect exposed waterstops during progress of work. Fabricate field joints in waterstops in accordance with manufacturer's printed instructions.
4. Isolation Joints in Slabs-on-Ground: Construct isolation joints (without dowels) in slabs-on-ground at points of contact between slabs on ground and vertical surfaces only where specifically detailed on the drawings. Install joint-filler strips at joints where indicated. Extend joint-filler strips full width and depth of joint, terminating flush with finished concrete surface, unless otherwise indicated on the drawings. Install joint-filler strips in lengths as long as practicable. Where more than one length is required, lace or clip sections together. Provide construction joints with dowels at all locations unless isolation joints are detailed.
5. Contraction (Control) Joints in Slabs-on-Ground and Unbonded Topping Slabs: Maximum joint spacing shall be 36 times the slab thickness or 20 feet, whichever is less and at a minimum on column lines unless otherwise noted on the drawings. Use one of the two following methods (sawed or formed) to create the joints. Do not use the formed joint in areas subject to vehicular traffic.
    a. Sawed Joints
        1) Primary Method: Early-Entry, dry-cut method, by Soff-Cut International, Corona, CA (800) 776-3328. Finisher must have documented successful experience in the use of this method prior to this project. Install cuts within 1 to 4 hours, depending on air temperature, after final finish as soon as the concrete surface is firm enough to not be torn or damaged by the blade at each saw cut location. Use 1/8 inch thick blade, cutting 1 1/4” inch into the slab.
        2) Optional Method (where Soff-Cut System method equipment is not available, subject to limitations): This method may not be used when there is no dowel passing through the contraction joint. Use a conventional saw to cut joints within 4 to 12 hours after finishing as soon as the concrete has hardened sufficiently to prevent aggregates from being dislodged by the saw. Complete cutting before shrinkage stresses become sufficient to produce cracking. Use 1/8 inch thick blade, cutting to a depth of 1/4 of the slab thickness but not less than 1 inch. Cut to a depth of 1/3 slab thickness for slabs reinforced with steel fibers.
    b. Formed Joints: Form contraction joints by inserting premolded plastic hardboard or fiberboard strip into fresh concrete until top surface of strip is flush with slab surface. The depth is to be 1/4 the slab thickness, but not less than 1 inch. Tool slab edges round on each side of insert. After concrete has cured, remove inserts and clean groove of loose debris.
    c. Joint Filler: Provide in both contraction and saw-cut construction joints when specified.
        1) Remove dirt and debris from the joint by vacuuming immediately prior to filling joint. Clean the joint of curing compounds and sealers.
        2) Filler material shall be applied to the joints when the building is under permanent temperature control, but no less than 90 days

after slab construction.

3) Follow the manufacturer's recommended procedure for installing filler material. The joint filler must be flush with the adjacent concrete. A concave profile on the top of the joint filler is unacceptable and will be grounds for removal and replacement.

d. The Contractor shall protect the joints from damage caused by wheeled traffic or other sources during construction until a joint-filler material (if specified) has been installed.

3.13 INSTALLATION OF EMBEDDED ITEMS

A. General: Set and build into work anchorage devices and other embedded items required for other work that is attached to, or supported by, cast-in-place concrete. Use setting drawings, diagrams, instructions and directions provided by suppliers of items to be attached thereto unless directed otherwise by these specifications. Install reglets to receive top edge of foundation sheet waterproofing where specified by the Architect, and to receive thru-wall flashings in outer face of concrete frame at exterior walls, where flashing is shown at lintels, relieving angles and other conditions.

B. Edge Forms and Screed Strips for Slabs: Set edge forms or bulkheads and intermediate screed strips for slabs to obtain required elevations and contours in finished slab surface. Provide and secure units sufficiently strong to support types of screed strips by use of strike-off templates or accepted compacting type screeds.

C. Do not install sleeves in concrete slabs, pier caps, footings or walls except where shown on the structural drawings or approved by the Architect and Engineer.

D. Securely fasten embedded plates, angles, anchor rods and other items to be built into the concrete to the formwork or hold in place with templates. Insertion of these items into concrete after casting is prohibited.

3.14 CONCRETE PLACEMENT

A. Preplacement Inspection: Before placing concrete, inspect and complete formwork installation, reinforcing steel and items to be embedded or cast-in. Notify other crafts to permit installation of their work; cooperate with other trades in setting such work. Moisten wood forms immediately before placing concrete where form coatings are not used.

B. Coordinate the installation of joint materials and moisture barriers with placement of forms and reinforcing steel.

C. Comply with ACI 301 and as herein specified.

1. Deposit concrete continuously or in layers of such thickness that no concrete will be placed on concrete which has hardened sufficiently to cause the formation of seams or planes of weakness. If a section cannot be placed continuously, provide construction joints as herein specified. Deposit concrete as nearly as practicable to its final location to avoid segregation. Spread concrete using short-handled, square-ended shovels, or come-alongs.

2. Placing Concrete in Forms: Deposit concrete in forms in horizontal layers not deeper than 24" and in a manner to avoid inclined construction joints. Where placement consists of several layers, place each layer while preceding layer is still plastic to avoid cold joints.
3. Consolidate placed concrete by mechanical vibrating equipment supplemented by hand-spading, rodding or tamping. Use internal vibrators of the largest size and power that can properly be used in the work as described in the table entitled “Range of characteristics, performance, and applications of internal vibrators” found in ACI 301.
4. Do not use vibrators to transport concrete inside forms. Insert and withdraw vibrators vertically at uniformly spaced locations not farther than visible effectiveness of machine. Place vibrators to rapidly penetrate placed layer and at least 6" into preceding layer. Do not insert vibrators into lower layers of concrete that have begun to set. At each insertion limit duration of vibration to time necessary to consolidate concrete and complete embedment of reinforcement and other embedded items without causing segregation of mix.
5. Placing Concrete Slabs: Deposit and consolidate concrete slabs in a continuous operation, within limits of construction joints, until the placing of a panel or section is completed.
6. Consolidate concrete during placing operations so that concrete is thoroughly worked around reinforcement and other embedded items and into corners of forms, eliminating air and stone pockets that may cause honeycombing, pitting, or planes of weakness.
7. Bring slab surfaces to correct level with straightedge and strikeoff. Use highway straightedges, bull floats or darbies to smooth surface free of humps or hollows before excess moisture or bleedwater appears on the surface. Do not disturb slab surfaces prior to beginning finishing operations.
8. Maintain reinforcing in proper position during concrete placement operations.
9. Placing Concrete by Pump: If concrete is placed by using a pump, the grout used for pump priming must not become a part of the completed structure unless an engineered grout design mix and grout location are approved in advance by the Engineer.

3.15 FINISH OF FORMED SURFACES

A. Rough Form Finish: Provide rough form finish for formed concrete surfaces not otherwise scheduled on the drawings to receive a smooth-form finish. This is the concrete surface having texture imparted by form facing material used, with tie holes and defective areas repaired and patched and fins and other projections exceeding 1/4" in height rubbed down or chipped off.

B. Related Unformed Surfaces: At tops of walls, horizontal offsets and similar unformed surfaces occurring adjacent to formed surfaces, strike-off smooth and finish with a texture matching adjacent formed surfaces. Continue final surface treatment of formed surfaces uniformly across adjacent unformed surfaces, unless otherwise indicated.

3.16 MONOLITHIC SLAB FINISHES

A. Place, consolidate, strike off, and level concrete, eliminating high spots and low spots, before proceeding with any other finish operation. Do not add water to the surface of the concrete during finishing operation.

B. Scratch Finish: Apply scratch finish to monolithic slab surfaces that are to receive concrete floor topping or mortar setting beds for tile, portland cement terrazzo and other bonded applied cementitious finish flooring material, and as otherwise indicated. After placing slabs, plane surface to tolerance specified below. Slope surfaces uniformly to drains where required. After leveling, roughen surface before final set, with stiff brushes, brooms or rakes.

C. Float Finish: Apply float finish to monolithic slab surfaces to receive trowel finish and other finishes as hereinafter specified, and slab surfaces which are to be covered with membrane or elastic waterproofing, membrane or elastic roofing, or sand-bed terrazzo, and as otherwise indicated. After screeding, consolidating and leveling concrete slabs, do not work surface until ready for floating. Begin floating, using a hand float, a bladed power float equipped with float shoes, or a powered disk float, when the bleed water sheen has disappeared and the concrete surface has stiffened sufficiently to permit the operation. Check and level surface plane to a tolerance as specified below. Cut down high spots and fill low spots. Uniformly slope surfaces to drains. Immediately after leveling, refloat surface to a uniform, smooth, granular texture.

D. Trowel Finish: Apply trowel finish to monolithic slab surfaces to be exposed-to-view, and slab surfaces to be covered with resilient flooring, carpet, ceramic or quarry tile, paint or other thin film finish coating system. After floating, begin first trowel finish operation by hand or power-driven trowel. Begin final troweling when surface produces a ringing sound as trowel is moved over surface. Consolidate concrete surface by final handtroweling operation, free of trowel marks, uniform in texture and appearance, and with a level surface to a tolerance as specified below. Grind smooth surface defects which would telegraph through applied floor covering system.

E. Trowel and Fine Broom Finish: Where ceramic or quarry tile is to be installed with thinset mortar, apply initial trowel finish as specified above, then immediately follow with slightly scarifying surface by fine brooming.

F. Slip-Resistive Broom Finish: Apply slip-resistive broom finish to ramps less than 6% slope, exterior concrete platforms, steps and ramps and elsewhere as indicated. Immediately after float finishing, slightly roughen concrete surface by brooming with fiber bristle broom perpendicular to main traffic route. Coordinate required final finish with Architect before application.

G. Roller-Bug Finish: Provide a roller-bug finish with a minimum ¼" amplitude to all ramps exceeding a 6% slope. Extend the finish as least 12 feet beyond the beginning and ending of the greater-than-6% ramp. The finish shall be imprinted on the concrete by the use of a roller-bug tamper.

H. Finish of Top of Spread Footings and/or Mat Foundations
   1. Top Surface below Finished Slab: The top of the footing or mat shall be screeded level and smooth with a flatness F-number, FF15 (overall), FF10 (minimum local) and a levelness F-number, FL12 (overall), FL10

(minimum local).

2. Top Surface as Finished Slab: The top surface of a footing or mat that is to serve as the finished slab in the building shall be leveled, cured, and surface prepared as specified for the finished floor construction appropriate to the space usage as defined in the Architectural Drawings.

3.17 CONCRETE FINISH MEASUREMENT AND TOLERANCES

A. Testing Procedure: ASTM E 1155:

B. Tolerance on Floor Elevations: Construction tolerance on absolute floor elevation from the specified elevation as shown on the drawings shall be as specified below, taken from ACI 117:
1. Slab-on-Grade Construction - + 3/4".
2. Top surfaces of all other slabs - + 3/4". The tolerance on relative elevation difference between points on the floor shall be definedby the FL Levelness F-Number as prescribed below.

C. Random Traffic Floor Finish Tolerances:
1. Specified overall values for flatness (SOFF) and levelness (SOFL) shall conform to the values listed below for the floor surface classification noted for each slab category noted.

Floor Surface Classification	SOFF	SOFL
Conventional	19	13
Good	38	25
Flat	50	33
Very Flat	75	50
Super Flat	100	66
Ultra Flat	150	100

2. Minimum local values for flatness (MLFF) and levelness (MLFL) shall equal 3/5 of the SOFF and SOFL values, respectively, unless noted otherwise. The MLFF and MLFL values shall apply to the minimum areas bounded by the column lines and half-column lines, or the minimum areas bounded by the construction and contraction joints, whichever are the smaller areas.
3. The SOFL and MFLL tolerance values shall apply only to level slabs-on-ground. The Levelness tolerance numbers shall not apply to unshored slabs that deflect under self-weight.
4. Slabs specified to slope shall have a tolerance from the specified slope of 3/8" in 10 feet at any point.

D. Construction Requirements to Achieve Specified Floor Finish Tolerances:
1. Forms shall be properly leveled, in good condition and securely anchored including special attention to ends and transitions.
2. Bearing surfaces for straightedges such as form edges or previously poured slabs shall be kept clean of laitance, sand, gravel, or other foreign elements.
3. Screeds shall be maintained in good condition with true round rolling wheels and level cutting edges. The use of optical sighting equipment such as lasers is recommended for checking levelness and straightness. The Contractor shall promptly adjust or replace equipment when test results indicate substandard work.

4. Highway straightedges are recommended for use in lieu of bullfloats for all slab placement and finishing operations.

E. Contractor Responsibility for Concrete Floor Finish Requirements: Floor finish requirements shown below (flatness and levelness tolerances) are minimum requirements that apply unless stricter requirements are contained in instructions for installation of applied floor products in which case the Contractor is responsible for attaining the values prescribed by the manufacturer of such products.

F. Concrete Floor Finish Tolerance for Slab-on-Grade Construction:
1. Concrete Placement: Concrete shall be placed and screeded to predetermined marks set to elevations prescribed on the drawings.
2. Finish Tolerances of Random Traffic Floor Surfaces:
   a. Slabs in nonpublic areas, mechanical rooms, slabs to receive thick-set tile or topping: Conventional
   b. Carpeted Areas: Good
   c. Exposed slabs in public spaces, slabs to receive thin-set flooring: Flat

G. Concrete Floor Finish Tolerance - Unshored Metal Deck on Shored or Unshored Steel Beam or Open-Web Joist Floor Construction:
1. Concrete Placement: Concrete over metal deck shall be placed and screeded level and flat to the tolerance specified below, maintaining at least the minimum slab thickness at all locations as specified on the drawings. The Contractor shall increase the slab thickness as required to compensate for metal deck deflection, and in unshored beam construction, beam deflection in excess of actual beam camber in order to achieve a level and flat floor within specified tolerances.
2. Finish Tolerance of Random Traffic Floor Surfaces:
   a. Slabs in nonpublic areas, mechanical rooms, surfaces to received raised computer flooring, surfaces to have thick-set tile or a topping, and parking structures: Conventional
   b. Carpeted Areas: Moderately Flat
   c. Exposed slabs in public spaces, slabs to receive thin-set flooring: Flat
   d. Eighty percent (80%) of the final floor surface shall fall within an envelope of 0.75" centered about the mean elevation of all the readings. (± 0.375 about mean). The mean elevation of all readings shall not deviate from the specified design grade by more than ± 0.375".
3. Extra Concrete: The contractor shall include in his bid any additional concrete required to achieve the specified slab surface finish tolerance and to compensate for metal deck deflection, and for beam deflection in excess of actual beam camber.

H. Remedial Measures for Slab Finish Construction Not Meeting Specified Tolerances:
1. Application of Remedial Measures. Remedial measures specified herein are required whenever either or both of the following occur:
   a. The composite overall values of FF or FL of the entire floor installation measure less than specified values.
   b. Any individual test section measures less than the specified absolute minimum FF or FL value.

2. Modification of Existing Surface:
   a. If, in the opinion of the Architect/Engineer or Owner's Representative, all or any portion of the substandard work can be repaired without sacrifice to the appearance or serviceability of the area, then the Contractor shall immediately undertake the approved repair method.
   b. The Contractor shall submit for review and approval a detailed work plan of the proposed repair showing areas to be repaired, method of repair and time to affect the repair.
   c. Repair method(s), at the sole discretion of the Architect / Engineer or Owner's Representative, may include grinding (floor stoning), planning, re-topping with self-leveling underlayment compound or repair topping, or any combination of the above.
   d. The Architect / Engineer or Owner's Representative maintains the right to require a test repair section using the approved method of repair for review and approval to demonstrate a satisfactory end product. If, in the opinion of the Architect/Engineer or Owner's Representative, the repair is not satisfactory an alternate method of repair shall be submitted or the defective area shall be replaced.
   e. The judgment of the Architect / Engineer or Owner's Representative on the appropriateness of a repair method and its ability to achieve the desired end product shall be final.
   f. All repair work shall be performed at no additional cost to the Owner and with no extension to the construction schedule.

3. Removal and Replacement:
   a. If, in the opinion of the Architect / Engineer or Owner's Representative, all or any portion of the substandard work cannot be satisfactorily repaired without sacrifice to the appearance or serviceability of the area, then the Contractor shall immediately commence to remove and replace the defective work.
   b. Replacement section boundaries shall be made to coincide with the test section boundaries as previously defined.
   c. Sections requiring replacement shall be removed by saw cutting along the section boundary lines to provide a neat clean joint between new replacement floor and existing floor.
   d. The new section shall be reinforced the same as the removed section and doweled into the existing floor as required by the Engineer. No existing removed reinforcing steel may be used. All reinforcing steel shall be new steel.
   e. Replacement sections may be retested for compliance at the discretion of the Architect / Engineer or Owner's Representative.
   f. The judgment of the Architect / Engineer or Owner's Representative on the need for replacement shall be final.
   g. All replacement work shall be performed at no additional cost to the Owner and with no extension to the construction schedule.

3.18 CONCRETE CURING AND PROTECTION

A. General:
   1. Protect freshly placed concrete from premature drying and excessive cold or hot temperatures. Maintain concrete with minimal moisture loss at a relatively constant temperature for the period necessary for hydration of the

cement and hardening of concrete. Apply evaporation retarder if hot, dry and windy weather causes rapid moisture loss exceeding 0.2 lb./sq. ft. x hr before and during finishing operations. Apply in accordance with manufacturer's instructions after screeding and bull floating, but before power floating and troweling.

2. Curing shall commence as soon as free water has disappeared from the concrete surface after placing and finishing. The curing period shall be 7 days for all concrete except high early strength concrete which shall be cured for 3 days minimum. Alternatively, curing times may be reduced if either of the following provisions is complied with:
   a. If tests are made of cylinders kept adjacent to the structure and cured by the same methods, curing measures may be terminated when the average compressive strength has reached 70% of the specified 28 day compressive strength.
   b. If the temperature of the concrete is maintained at a minimum of 50°F for the same length of time required for laboratory cured cylinders of the same concrete to reach 85% of the 28 day compressive strength, then curing may be terminated thereafter.
   c. Curing shall be in accordance with ACI 301 procedures. Avoid rapid drying at the end of the curing period.

B. Curing Formed Surfaces: Where wooden forms are used, cure formed concrete surfaces by moist curing with forms in place for full curing period or until forms are removed. When forms are removed, continue curing by one or a combination of the methods specified below, as applicable.
   1. Basement Walls, Sides of Exterior Retaining Walls: Moist cure in forms or by one or a combination of methods 1, 2 or 3 specified below. Use a liquid membrane-forming dissipating resin curing compound conforming to ASTM C 309, type 1, class A or B for method 3.

C. Curing Unformed Surfaces: Cure unformed surfaces, such as slabs, floor topping and other flat surfaces by one or a combination of the methods specified below, as applicable. The Contractor shall choose a curing method that is compatible with the requirements for subsequent material usage on the concrete surface.
   1. Floors Directly Exposed to Vehicular or Foot Traffic not in Parking Areas and not otherwise receiving a chemical hardener or penetrating sealer finish: Apply two coats of a high-solids, water-base, non-yellowing, liquid membrane-forming curing and sealing compound conforming to ASTM C1315, type 1, Class A in accordance with method 3 as specified below.
   2. Floors in Non-Public spaces that are left exposed to view and not receiving sealers or hardeners, floors involved in under-floor air distribution systems: Apply one coat of a high-solids, water-based, non-yellowing, liquid membrane-forming curing and sealing compound conforming to ASTM C 1315, type 1, Class A or B in accordance with method 3 as specified below.
   3. Floors that are to receive subsequent cementitious toppings, sealers, hardeners, ceramic tile, acrylic terrazzo, vinyl composition tile, sheet vinyl, linoleum, vinylbacked carpet, rubber, athletic flooring, synthetic turf, wood, epoxy overlay or adhesive, or other coating or finishing products: Cure using methods 2 or 3 as specified below. Use a water-based dissipating resin type curing compound conforming to ASTM C 309, type 1, class A or B for method 3.

4. All Other Surfaces: Cure using methods 1, 2, or 3 as specified below. Use a water-based dissipating resin type curing compound conforming to ASTM C 309, type 1, class A or B for method 3.

D. Curing Methods
1. Method 1 - Moisture Curing: Provide moisture curing by one of the following methods:
   a. Keep concrete surface continuously wet by covering with water.
   b. Continuous water-fog spray.
   c. Covering concrete surface with specified absorptive cover, thoroughly saturating cover with water and keeping continuously wet. Place absorptive cover to provide coverage of concrete surfaces and edges, with 4" lap over adjacent absorptive covers.
2. Method 2 - Moisture-Retaining Cover Curing: Provide moisture-retaining cover curing as follows:
   a. Cover concrete surfaces with moisture-retaining cover for curing concrete, placed in widest practicable width with sides and ends lapped at least 3" and sealed by waterproof tape or adhesive. Immediately repair any holes or tears during curing period using cover material and waterproof tape. Water may be added to concrete surface to prevent drying before the cover is installed, but the surface shall not be flooded with water if a non-absorptive cover is used.
3. Method 3 – Curing or Curing and Sealing Compound: Provide curing, curing/hardener, liquid membrane-forming curing, or curing and sealing compound as follows:
   a. Apply specified compound to concrete slabs as soon as final finishing operations are complete (within 2 hours and after surface water sheen has disappeared). Apply uniformly in continuous operation by power-spray or roller in accordance with manufacturer's directions. Do not allow to puddle. Recoat areas subjected to heavy rainfall within 3 hours after initial application. Maintain continuity of coating and repair damage during curing period. Apply second coat for sealing 2 to 3 hours after the first coat was applied. Do not use membrane-forming curing and sealing compounds on surfaces which are to be covered with coating material applied directly to concrete, liquid floor hardener, waterproofing, dampproofing, membrane roofing, flooring (such as ceramic or quarry tile, glued-down carpet, vinyl composition tile, linoleum, sheet vinyl, rubber, athletic flooring, synthetic turf, epoxy overlay or adhesive, or wood), paint or other coatings and finish materials. Dissipating resin type cures are acceptable in these locations.

3.19 HOT OR OTHER ADVERSE WEATHER CONCRETING

A. Definition:
1. Conditions warranting hot weather concreting practices are defined as any combination of high air temperature, low relative humidity and wind velocity tending to impair the quality of fresh or hardened concrete or otherwise result in abnormal properties. If conditions cause an evaporation rate of 0.2 lb./sq. ft./hr. as calculated by Figure 2.1.5 in ACI 305R-99, then precautions shall be taken to prevent plastic shrinkage cracks from occurring.

2. The maximum acceptable concrete temperature at the truck discharge point shall be 95°F.

B. Specification: Follow hot weather concreting practices specified below when required to limit the concrete temperature at the truck discharge point to the stated maximum acceptable temperature.

C. Records: Under hot weather conditions, the Contractor shall keep records of outside air temperature, concrete temperature at truck discharge and general weather conditions.

D. Hot Weather Concreting Requirements: The following items, all or in part as required, shall be followed to limit the concrete temperature to the stated maximum acceptable temperature and to minimize the possibility of plastic shrinkage cracks from developing.

1. Design the concrete mixes specifically for hot weather conditions replacing some cement with fly ash or other pozzolan and using a water reducing retarding admixture (ASTM C 494 Type D).
2. Use the largest size and amount of coarse aggregate compatible with the job.
3. Use sunshades and/or windbreaks.
4. Delay construction of indoor slabs-on-grade until the walls and roof are constructed.
5. Cool and shade aggregate stockpiles.
6. Use ice as part of the mixing water or cool the water with liquid nitrogen.
7. Limit the number of revolutions at mixing speed to 125 maximum.
8. Reduce time between mixing and placing as much as possible.
9. Do not add water to ready-mixed concrete at the job site unless it is part of the amount required initially for the specified water-cement ratio and the specified slump.
10. Schedule concrete placement for early morning, late afternoon, or night.
11. Have all forms, equipment and workers ready to receive and handle concrete.
12. Maintain one standby vibrator for every three vibrators used.
13. Keep all equipment and material cool by spraying with water including exteriors of forms, reinforcing steel, subgrade, chutes, conveyors, pump lines, tremies, and buggies.
14. Protect slab concrete at all stages against undue evaporation by applying a fog spray or mist above the surface or applying a monomolecular film. Where high temperatures and/or placing conditions dictate, use water-reducing retarding admixture (Type D) in lieu of the water-reducing admixture (Type A) as directed by the Owner's Testing Laboratory.
15. Provide continuous curing, preferably with water, during the first 24 hours using wet burlap, cotton mats, continuous spray mist, or by applying a curing compound meeting ASTM C 1315. Continue curing for 3 days minimum.
16. Cover reinforcing steel with water soaked burlap so that steel temperature will not exceed ambient air temperature immediately before placement of concrete.
17. As soon as possible, loosen forms and run water down the inside. When forms are removed, provide a wet cover to newly exposed surfaces.

3.20 COLD OR OTHER ADVERSE WEATHER CONCRETING

A. Definition:
1. Concrete shall not be placed when the outside air temperature is 40°F or less unless cold weather concreting practices are followed as specified below.
2. Cold weather concreting practices should also be followed whenever the average daily air temperature is less than 40°F for more than three successive days. The average daily air temperature is the average of the highest and lowest temperature occurring during the period from midnight to midnight. The requirement for adhering to these cold-weather concreting practices may be terminated when the air temperature is above 50º F for more than half of any 24h duration.
3. The temperature of the concrete immediately after placing shall be no less than and no more than 20º greater than the following temperature:.
   a. 55º F for sections less than 12 in. in the least dimension
   b. 50º F for sections 12 to 36 in. in the least dimension
   c. 45º F for sections 36 to 72 in. in the least dimension
   d. 40º F for sections greater than 72 in. in the least dimension
4. Protect the concrete immediately after placing and during the curing period such that the concrete does not freeze nor fall below the temperature levels stated in the above paragraph. When removing protection, the maximum decrease in temperature measured at the surface of the concrete in a 24 hour period shall not exceed the following:
   a. 50º F for sections less than 12 in. in the least dimension
   b. 40º F for sections 12 to 36 in. in the least dimension
   c. 30º F for sections 36 to 72 in. in the least dimension
   d. 20º F for sections greater than 72 in. in the least dimension
5. The maximum concrete temperature heated by artificial means at point of placement shall not exceed 90°F.

B. Records: Under cold weather conditions, the Contractor shall keep records of outside air temperature, concrete temperature as placed and general weather conditions.

C. Cold Weather Concreting Requirements: The following items, all or in part as required, should be followed to assure acceptable concrete in cold weather conditions:

1. Design the concrete mix suitable for cold weather. Use air entrainment (where not prohibited) and obtain high early strength by using a higher cement content, a high early strength cement (Type III), or a specified non-chloride accelerator (ASTM C 494 Type C or E).
2. Protect the concrete during curing period using insulating blankets, insulated forms, enclosures and/or heaters.
3. Concrete cured in heated enclosures shall have heaters vented to prevent exposure of concrete and workmen to noxious gases.
4. Frozen subgrade shall be thawed prior to concrete placement and snow and ice shall be removed from forms.
5. Concrete shall be protected and cured at 50°F for seven days minimum if normal concrete (Type I cement) is used and for three days minimum if high early strength concrete (concrete with Type III cement, 100 pounds cement

added per cubic yard concrete, or a non-chloride accelerator added).

6. Concrete not loaded during construction shall be protected a minimum of 3 days for normal concrete and 2 days for high early strength concrete to obtain safe form stripping strength. Concrete fully loaded during construction shall be protected for whatever time period is required to obtain the required strength as determined by nondestructive strength tests (Windsor probe, Swiss Hammer Test) on the in-place concrete.
7. Heat the mixing water and then blend hot and cold water to obtain concrete no more than 10°F above the required temperature.
8. Heat the aggregates by circulating steam in pipes placed in the storage bins for air temperatures consistently below 32°F. When either water or aggregate is heated to over 140°F combine them in the mixer first to obtain a maximum temperature of the mixture not to exceed 140°F in order to prevent flash set of the concrete.
9. Uniformly thaw aggregates far in advance of batching to prevent moisture variations in the stockpile.
10. Cover warmed stockpiles with tarps to retain heat.
11. Place air entraining admixture in the batch after the water temperature has been reduced by mixing with cooler solid materials.
12. Use wind screens to protect concrete from rapid cooling.
13. Place vertical pump lines inside the building, if possible, for concrete being pumped.
14. Maintain artificial heat as low as possible to reduce temperature stresses during cooling.
15. Avoid water curing of concrete except for parking garage structures. Apply the required curing compound to unformed surfaces as soon as possible to prevent drying of concrete from heated enclosures.
16. Delay form stripping as long as possible to help prevent drying from heated enclosures and to reduce damage to formed surfaces caused by premature stripping.
17. Provide triple thickness of insulating materials at corners and edges vulnerable to freezing.
18. Wrap protruding reinforcing bars with insulation to avoid heat drain from the warm concrete.
19. Gradually reduce the heat at the end of the heating period to reduce the likelihood of thermal shock.

3.21 SHRINKAGE AND TEMPERATURE REINFORCEMENT

A. Provide shrinkage and temperature reinforcement (as required by ACI 318) at right angles to main top and bottom bars for all structural slabs unless detailed otherwise on the drawings.

3.22 PLACEMENT OF COLUMN DOWELS AND ANCHOR RODS

A. Dowels for columns, plinths, and pilasters and anchor rods shall be accurately set using 1/8" thick steel templates.

3.23 REINFORCEMENT IN COMPOSITE METAL DECK SLAB

A. Composite metal deck slabs shall be reinforced as indicated on the drawings.

B. Extra Reinforcement Over Girders: Provide additional reinforcing steel over interior girders as shown on the drawings.

C. Placement of Slab Reinforcement: Provide bolsters, high chairs, and/or additional reinforcing as shown in details on the drawings to support the reinforcing with the clear cover shown on the details.

3.24 REINFORCEMENT AROUND OPENINGS IN COMPOSITE METAL DECK SLABS

A. For all openings in metal deck not framed with structural steel and greater than 10" in width in either direction, provide additional reinforcing steel as shown in details on the drawings.

3.25 REINFORCEMENT IN GRADE BEAMS

A. Provide reinforcing in grade beams as shown on the drawings.

B. Bar Support for Grade Beam Cages: Grade beam bottom steel shall be supported at 5'- 0" maximum centers using beam bolsters that provide 3" bottom cover to the reinforcing steel. Beam bolsters used shall be designed and manufactured for support on soil.

3.26 REINFORCEMENT IN TOPPING SLABS

A. Provide bar reinforcing in slabs as shown on the drawings.

3.27 REINFORCEMENT IN HOUSEKEEPING PADS

A. Provide bar reinforcing in housekeeping pads as shown on the drawings.

3.28 MISCELLANEOUS CONCRETE ITEMS

A. Filling-In: Fill-in holes and openings left in concrete structures for passage of work by other trades, unless otherwise shown or directed, after work of other trades is in place. Mix, place and cure concrete as herein specified, to blend with in-place construction. Provide other miscellaneous concrete filling shown or required to complete work.

B. Curbs: Provide monolithic finish to interior curbs by stripping forms while concrete is still green and steel-troweling surfaces to a hard, dense finish with corners, intersections and terminations slightly rounded.

C. Equipment Bases and Foundations: Provide machine and equipment bases and foundations, as shown on drawings. Set anchor bolts for machines and equipment to template at correct elevations, complying with certified diagrams or templates of manufacturer furnishing machines and equipment.

D. Steel Pan Stairs: Provide concrete fill for steel pan stair treads and landings and associated items. Cast-in safety inserts and accessories as shown on drawings. Screed, tamp and finish concrete surfaces as scheduled

E. Installation of Adhesive Anchors Using Injectable Epoxy or Adhesive: A representative of the adhesive manufacturer shall be present for the first three holes that are drilled and filled with adhesive. After drilling the hole to the diameter and depth recommended by the manufacturer, clean the hole with a wire or nylon brush. Blow the dust out of the hole using compressed air with a nozzle that reaches to the bottom of the hole. When using adhesive from a new pack, the adhesive that is discharged from the mixing nozzle should be a uniform gray color before any adhesive is installed in the hole. Fill the hole with adhesive starting from the very bottom of the hole until the hole is about 2/3 full. Do not leave an air pocket at the bottom of the hole. Insert the anchor rod or dowel by slowly twisting it into the hole.

3.29 CONCRETE SURFACE REPAIRS

A. Definition - Defective Areas:
1. Formed Surfaces: Concrete surfaces requiring repairs shall include all honeycombs, rock pockets and voids exceeding 1/4" in any dimension, holes left by tie rods or bolts, cracks in excess of 0.01" and any other defects that affect the durability or structural integrity of the concrete.
2. Unformed Surfaces: Concrete surfaces requiring repair shall include all surface defects such as crazing, cracks in excess of 0.01" wide or cracks which penetrate to reinforcement or through the member, popouts, spalling and honeycombs.

B. Classification:
1. Structural Concrete Repair: Major defective areas in concrete members that are load carrying (such as shear walls, beams, joists and slabs), are highly stressed, and are vital to the structural integrity of the structure shall require structural repairs. Structural concrete repairs shall be made using a two-part epoxy bonder, epoxy mortar or specified polymer repair mortar. Location of structural concrete repairs shall be determined by the Engineer.
2. Cosmetic Concrete Repair: Defective areas in concrete members that are non-load carrying and minor defective areas in load carrying concrete members shall require cosmetic concrete repair when exposed to view and not covered up by architectural finishes. Cosmetic concrete repairs may be made using a polymer repair mortar and compatible bonding agent. The location of cosmetic concrete repair required shall be determined by the Architect / Engineer. Stains and other discolorations that cannot be removed by cleaning and are exposed to view will require cosmetic repair. Cosmetic concrete repair in exposed-to-view surfaces will require Architect's approval prior to patching operation.
3. Slab Repairs: High and low areas in concrete slabs shall be repaired by removing and replacing defective slab areas unless an alternate method, such as grinding and/or filling with self-leveling underlayment compound or repair mortar is approved by the Architect / Engineer. Repair of slab spalls and other surface defects shall be made using epoxy products as specified above and as determined by the Engineer. The high strength flowing repair mortar may be used for areas greater than 1 inch in depth.

3.30 QUALITY ASSURANCE TESTING AND INSPECTION DURING CONSTRUCTION

A. See Testing Laboratory Services section of these Specifications for concrete materials and cast-in-place concrete inspection and test requirements.

3.31 INVESTIGATION OF LOW CONCRETE STRENGTH TEST RESULTS

A. Contractor Responsibility for Low Strength Concrete
1. If the average of any three consecutive strength tests falls below the required f'c for a class of concrete but no individual strength test is more than 500 psi below f'c, the Contractor shall immediately notify the Engineer by telephone or e-mail and take immediate steps to increase the average of subsequent strength tests.
2. If any individual strength test falls more than 500 psi below the required f'c, the Contractor shall immediately notify the Engineer by telephone or e-mail and take immediate steps to assure that the load-carrying capacity of the structure is not jeopardized.

B. Additional Field Tests to Confirm Low Concrete Strengths
1. The cost of all investigations of low-strength concrete, as defined by any individual strength test being more than 500 psi below the required f'c, shall be borne by the Contractor.
2. Code-Prescribed Acceptance: The only accepted field-test methods of determining actual in-situ concrete strength is by the way of core tests as prescribed below.
3. Non-Destructive Tests: If any individual strength test falls more than 500 psi below the required f'c, the Engineer may request that non-destructive field tests be performed on the concrete in question using Swiss Hammer, Windsor Probe, or other appropriate methods as approved by the Engineer. Report the comparative test results of the suspect concrete under consideration with identical tests done on concrete of known strength and of the same class. The Engineer considers these test results as only approximate indicators of strength and may not necessarily, by themselves, resolve the low concrete strength issue. These test results will be considered as additional information by which to make an informed judgment. The Engineer reserves the right to accept the concrete based on the results of these approximate tests or order that core tests be taken as prescribed below. At the Contractor's option, the approximate non-destructive field-tests may be waived and core tests immediately initiated.
4. Core Tests: If, in the opinion of the Engineer, the likelihood of low-strength concrete is confirmed and it has been determined that the load-carrying capacity of the structure is significantly reduced as a result, the Engineer may request that core tests be taken from the area in question as directed by the Engineer. There shall be a minimum of three cores taken for each strength test more than 500 psi below the required f'c and tested in accordance with ASTM C 42. If concrete in the structure will be dry under service conditions, cores shall be air dried (temperature 60° to 80°F, relative humidity less than 60 percent) for 7 days before test and shall be tested dry. If concrete in the structure will be more than superficially wet under service conditions, cores shall be immersed in water for at least 48 hours and tested wet. The Contractor shall fill all holes made by drilling cores with an approved drypack concrete.
5. Acceptance Criteria for Core Test: Concrete in an area represented by core tests shall be considered adequate if the average of three cores is equal to at

least 85% of the required f'c and no single core is less than 75% of the required f'c. If approved by the Engineer, locations of erratic core strengths may be retested to check testing accuracy.

6. Load Test: If the concrete strength is not considered adequate based on core tests and the structural adequacy remains in doubt, the Engineer may order a load test as specified in ACI 318 be conducted for the questionable portion of the structure.
7. Strengthening of the Structure or Demolition: If the structural adequacy of the affected portion of the structure remains in doubt following the load test, the Engineer may order the structure to be strengthened by an appropriate means or demolished and rebuilt at the Contractor's expense.

END OF SECTION 03 30 00

SECTION 03 66 00 – SPECIAL CONCRETE FLOOR FINISHES

PART 1 GENERAL

1. 01 SUMMARY

A. Section Includes: This section specifies Polished Concrete to 400 grit Level 2 Finish.

1. Repair of holes, cracks & spalls
2. Grinding, Applying Sealer and Hardener RetroPlate99, and Polishing Concrete to Specified Finish Level.
3. Process / Application
4. Applying TRCPS-SVTIPS (Solvent Protective Penetrating Sealer)
5. Applying VersaFlex Floor Joint Fillers

B. Related Work:

1. Section 03 30 00 Cast-In-Place Concrete
2. Section 03360 Concrete Polishing. Hardening/Sealing

1.02 PERFORMANCE REQUIREMENTS

A. American Society for Testing and Materials:

1. ASTM C779, Standard Test Method for Abrasion Resistance of Horizontal Concrete Surfaces
2. ASTM G23-81, Ultraviolet Light & Water Spray
3. ASTM C805, Impact Strength
4. ASTM C309, Standard Specification for Liquid Membrane-Forming Compounds for curing Concrete
5. ASTM C171 Stand Specification for Sheet Materials for curing Concrete

B. American Concrete Institute

1. ACI 302. 1R-89, Guide for Concrete Floor and Slab Construction

C. National Floor Safety Institute (NFSI)

1. NFSI Test Method 101-A Standard for Evaluating High-Traction Flooring Materials, Coatings, and Finishes
2. ANSI Standards

D. Reunion Internationale des Laboratoires D'Essais et de Recherches sur les Materiaux et les Construction (RILEM)

1. Rilem Test Method 101-A Standard Measurement of Reduction of Moisture Penetration Through Horizontal Concrete Surfaces

1.03 SYSTEM DESCRIPTION

A. Performance Requirements: Provide polished flooring that has been selected, manufactured and installed to achieve the following:

1. Abrasion Resistance: ASTM C779, Method A, high resistance, no more than 0.008 inch (0.20 mm) wear in 30 minutes.
2. Reflectivity: Increase of 35% as determined by standard gloss meter.
3. Waterproof Properties: Rilem Test Method 11.4, 70% or greater reduction in absorption.
4. High Traction Rating: NFSI 101-A, non-slip properties.

B. Design Requirements:

1. Hardened Concrete Properties:
   a. Minimum Concrete Compressive Strength: 3500 psi (24 MPa).
   b. Normal Weight Concrete: No lightweight aggregate.
   c. Non-air entrained.
2. Placement Properties:
   a. Natural concrete slump of 4 1/2 inches - 5 inches (114 - 127 mm). Admixtures may be used.
   b. Flatness Requirements:
      1) Overall FF 50.
3. Curing Options: (Curing Compounds Can Be Used)
   a. Membrane forming curing compounds (ASTM C309, Type 1, Class B, all resin, dissipating cure).
      1) Acrylic curing and sealing compounds not recommended.
   b. Sheet membrane (ASTM C171); polyethylene film not recommended.
   c. Damp Curing: Seven-day cure.

D. Drain Clean-Outs: If possible move drain clean-outs from the middle of the rooms to be into storage or closets areas.

E. Trench Drains/Floor Drains: If trench drains/floor drains are being installed on this project, prior to concrete placement remove drain covers and install wood panels to fit flush with the top of the drain. This should allow the concrete placement company to machine trowel over the top of the drains to achieve a flat and smooth finish. This process should eliminate the need of the finisher from walking on the slab and finishing this area by hand trowel. Removal of the wood after polishing is completed should be achieved by cutting down the middle of the wood to eliminate chipping the edges of the concrete.

1.04 ACTION SUBMITTALS

A. Provide Contractors Qualifications Form for pre-qualifications to bid.

B. General: Submit listed action submittals in accordance with Contract Conditions and Section - Submittal Procedures.

C. Shop Drawings: Indicate information on shop drawings as follows:

1. Typical layout including dimensions and floor grinding schedule.
2. Plan view of floor and joint pattern layout.
3. Areas to receive colored surface treatment.
4. Hardener, sealer, densifier in notes.

D. Product Data: Submit product data, including manufacturer's SPEC-DATA® product sheet, for specified products.

1. Material Safety Data Sheets (MSDS).
2. Preparation and concrete grinding procedures.
3. Colored Concrete Surface, Dye Selection Guides.
4. Color Chart for Polyurea Joint Material

1.05 INFORMATION SUBMITTALS

A. Quality Assurance:

1. Test Reports: Certified test reports showing compliance with specified performance characteristics and physical properties as cited in 1.03 Performance Requirements.
2. Certificates:
   a. Product certificates signed by manufacturer certifying materials comply with specified performance characteristics and criteria and physical requirements.
   b. Letter of certification from the National Floor Safety Institute confirming the system has been tested and passed phase Two Level of certification when tested by Method 101-A.
   c. Current contractor's certificate signed by manufacturer declaring contractor as an approved installer of Total Refinement Concrete Polishing System.

3. Manufacturer's Instructions: Manufacturer's installation instructions.

4. Provide Contractors Qualifications Form

1.06 CLOSEOUT SUBMITTALS

A. Warranty: Submit warranty documents specified.

B. Operation and Maintenance Data: Submit operation and maintenance data for installed products in accordance with Section 01 78 00 - Closeout Submittals.

1. Include:
   a. Manufacturer's instructions on maintenance renewal of applied treatments.
   b. Protocols and product specifications for joint filing, crack repair and/or surface repair.

1.07 SUBMITTALS

A. Comply with pertinent provisions of Section 01600- Product Requirements.

1. Provide submittal information within 35 calendar days after the contractor has received the owner's notice to proceed.

B. Product data:

1. Submit special concrete finishes manufacturer's specifications and test data.
2. Submit special concrete finishes describing product to be provided, giving manufacturer’s name and product name for the specified material proposed to be provided under this section.
3. Submit special concrete finishes manufacturer's recommended installation procedures; which when approved by the Architect, will become the basis for accepting or rejecting actual installation procedures used on the work.
4. Submit special concrete finishes technical data sheet giving descriptive data, curing time, and application requirements.
5. Submit special concrete finishes manufacturer’s Material Safety Data Sheet (MSDS) and other safety requirements.
6. Follow all special concrete finishes published manufacturer’s installation instructions.
7. Execution / Application

C. Test Reports:

1. Provide certified test reports, prepared by an independent testing laboratory, confirming compliance with specified performance criteria.
2. Provide certified test reports, prepared by an independent firm for the flatness FF50 for the slab. This test should be taken after placement of the concrete.

D. Product Variations: TRCPS Disclaimer

TOTALLY REFINEMENT CONCRETE POLISHING SYSTEM will be applied to the concrete on this job. All concrete slabs are unique to each concrete placement and depending on the weather and the temperature of the day the chemical composition, mix design, porosity, age, texture, and color of the concrete substrate, mottling and wide variations in color and intensity will produce its own individual Polished Concrete Character and Look. The owner also understands that the concrete will have variegated colors, unforeseen repairs, holes and pits in the slab and shrinkage cracks. The initial grinding process should remove most of the paste from the surface of the concrete. The variegated colors produced are unique to each concrete surface and depend on the chemical composition, mix design, porosity, age, texture, and color of the concrete substrate. Concrete from different loads or pours, and in patched in areas, may appear significantly different in color than adjacent areas, when treated with TRCPS-25LH & TRCPS-SVTIPS. Do NOT allow the finisher or his helpers to walk in the new placed concrete, foot prints and depressed areas may appear in the polished concrete.
The owner understands that the placement of the concrete is the most critical part of the polishing process.
However, after the initial grind the architect and owner/rep will want to walk the floor with the polisher to best determine if any repairs need to be made to the concrete.

1.08 QUALIFICATIONS & QUALITY ASSURANCE

A. Installer Qualifications:

1. Applicator MUST be a certified member of CPAA, Concrete Polishing Association of America, and or certified by Totally Refinement Concrete Polishing System.
2. Certified Installer MUST have a minimum of 1 senior crew leader with at least 5 years of hands on experience and no less than 2 Skilled Workmen who have at least 2 years and are thoroughly trained and experienced in the concrete polishing industry.
3. The special concrete finish manufacturer MUST be TRCPS certify applicator.
4. Applicator MUST have a minimum of SEVEN years in the Concrete Polishing Industry and crew leader MUST have a minimum of 5 years in the concrete polishing industry.
5. Applicator MUST have successfully performed a minimum of 20 projects of at least 20,000 square feet each in size and provide references on each project.
6. Applicator MUST be familiar with the specified requirements and the methods needed for proper performance of work of this section.
7. Applicator MUST own his equipment to perform work within scope of this project on a timely basis.
8. Reference Contractor Qualification Form to be submitted with product approval submission.

B. Manufacturer's Certification:

1. Applicator MUST provide letter of certification from concrete finish manufacturer stating that installer is certified applicator of TRCPS special concrete finishes, and is familiar with proper procedures and installation requirements required by the manufacturer.

C. Mock-ups:

1. Apply mock-ups of each type finish, to demonstrate typical joints, surface finish, color variation (if any), and standard of workmanship.
2. Mock-Up will be used to judge workmanship, concrete substrate preparation, operation of equipment, material application, color selection (if required) and shine.
   a. Build mock-ups approximately 30 square feet in the location indicated or if not indicated, as directed by the Architect or Owner Representative.
   b. Notify Architect or Owner Representative seven days in advance of dates and times when mock-ups will be constructed when practical.
   c. Obtain from the Architect or Owner Representative approval of mock-ups before starting construction.
   d. If the Architect or Owner Representative determines that mock-ups do not meet requirements, demolish and remove them from the site and cast others until mock-ups are approved.
   e. Maintain mock-ups during construction in an undisturbed condition as a standard for judging the completed work.
   f. Approved mock-ups may become part of the completed work if undisturbed at time of substantial completion.

g. A repair must be included in the mock-up and approved by the Architect or the Owners Representative
h. A sample of Edge Grinding & Polishing must be demonstrated and approved by Architect and Owner Representative.

D. Protection

1. Floor to be covered with Skudo paper. If Skudo is not available then cover with brown floor covering paper. ALWAYS tape the paper to the paper and **NEVER** apply tape directly to the floor. Then cover with 1/8' masonite/hard wood and tape the wood to wood to prevent the wood from sliding. After floor completion, the floor will be covered again using the same masonite/hard wood and new paper.

2. No satisfactory chemical or cleaning procedure is available to remove petroleum stains from the concrete surface. Prevention is therefore essential. (see Skudo)
   a. All hydraulic powered equipment MUST be diapered to avoid staining of the concrete.
   b. No trade will park vehicles on the inside slab. If necessary to complete their scope of work, drop cloths will be placed under vehicles at all times.
   c. No pipe cutting machine will be used on the inside floor slab.
   d. Steel will not be placed on interior slab to avoid rust staining.
   e. All equipment must be equipped with WHITE non-marking tires
   f. All equipment must be checked daily for screws and other materials stuck in the tires and removed.
   g. NO RED CHALK to be used on the floor.
   h. NO Spray / lacquer to be used on the floor as this floor is scheduled to be dyed/acid stained. These products can prevent dyes/stains from either adhering or reacting.
   i. NO SHARPIES to be used on the floor.
   j. DO NOT store materials on slab to be polished and dyed/stained. These materials can leave a ghost shadow imprint on the floor.

E. Pre-Installation Conference:

1. Conduct conference at project site to comply with requirements in Division 1 Section "Project Management and Coordination"
   a. Architect, Project Manager, Job Superintendent, Owner/Owners Representative, Form Erection Contractor, Concrete Placement Contractor & Finisher, Concrete Placement Management Team & Job Foreman
      1) Environmental requirements
      2) Scheduling and phasing of work
      3) Coordinating with other trades.
      4) Reminder to all trades that they are working on a surface that is to become a finished surface.
      5) Protection of adjacent surfaces.
      6) Surface preparation.
      7) Repair of defects and defective work prior to installation.

8) Cleaning prior to polishing.
9) Installation of polished floor finishes.
10) Protection of finished surface after installation.
11) Do not place any materials on the concrete surface that may cause staining, etching or scratching.

1.09 DELIVERY, STORAGE AND HANDLING

A. Deliver materials in original containers, with seals unbroken, bearing manufacturer labels indicating brand name and directions for storage.

B. Dispense special concrete finish material from factory numbered and sealed containers. Maintain record of container numbers.

C. Waste Management and Disposal:

1. Separate waste materials for Reuse and Recycling with concrete slurry in accordance with Section 0174 19 – Construction Waste Management and Disposal. Concrete slurry must be removed off site to a facility that will recycle the waste. Owner is responsible to provide a location adjacent to the building for polished to dispose of concrete slurry and for disposal of this material.

1.10 PROJECT CONDITIONS

A. Environmental limitations:

1. Comply with manufacturer's written instructions for substrate temperature and moisture content, ambient temperature and humidity, ventilation, and other conditions affecting topping performance.
   a. Concrete must have a Floor Flatness rating of at least FF50.
   b. Floor flatness will be measured by a third party immediately after placement.
   c. Concrete must have a Floor Levelness rating of at least FL40.
   d. Concrete must be cured a minimum of 28 days or as directed by the manufacturer before application of TRPCS can begin.

   e. Application of RetroPlate99 shall take place prior to installation of equipment, trim work, cabinets and substantial completion, thus providing a complete, uninhibited concrete slab for application.

C. Close areas to traffic during floor application and after application, for time period recommended in writing by manufacturer.

D. Owner will be responsible for providing adequate power, disposal of slurry products in compliance will all applicable codes.

E. Owner will provide security for equipment if facility is not secure.

E. Owner will be responsible for having the Flatness Test after placement.

PART 2 – PRODUCTS

2.01 MATERIALS AND MANUFACTURERS

A. HARDENING/SEALING AGENT

1. TRPCS-25
CONTACT: All The Marbles, Inc.
7700 Renwick A-4
Houston TX 77081
Manufactures Representative
Jerry S. Maltz
(o) 713-528-7787
(c) 713-825-7093

a. Performance Criteria:
1) Abrasion Resistance: ASTM C779 – Up to 400% increase in abrasion resistance.
2) Impact Strength: ASTM C805 – Up to 21% increase impact strength.
3) Ultra Violet Light and Water Spray: ASTM G23-81 – No adverse effect to ultra violet and water spray.
4) Reflectivity: Up to 30% increase in reflectivity.

B. PROTECTIVE IMPREGNATOR / SEALER

1. TRPCS-SVTIPS (Solvent Protective Penetrating Sealer)
Contact: All The Marbles, Inc
7700 Renwick A-4
Houston TX 77081
Manufactures Representative
Jerry S. Maltz
(o) 713-528-7787
(c) 713-825-7093

C. FLOOR JOINT MATERIAL

1. SL-65
CONTACT: VersaFlex Incorporated
386 South Adams Street
Kansas City, Ks 66105
Manufactures Representative
Roy Harvey
(o) 800-561-6191
(c) 913-948-1006

D. HOLE REPAIR MATERIAL

1. STONCLAD
CONTACT: Stonhard Inc.
Warren Miner

(o) 800-854-0330
(c) 281-6581947

2. Silica sand to best match aggregate in the slab
3. Color pigment if needed to best match concrete

E. FLOOR PROTECTION MATERIAL SKUDO

CONTACT: SKUDO USA Inc.
Brendon Smith
(o) 972-993-0777
(m) 650-704-2037

F. SURFACE FLOOR PROTECTION

3M™ Scotchgard™ Stone Floor Protection
CONTACT: 3M Center
Taylor Morrison
(c) 214-497-2909

G. CERTIFIED APPLICATOR

CONTACT: Certified Applicator:
All the Marbles, Inc.
7700 Renwick, Ste 4A
Houston, TX 77081
(o) 713-528-7787; (fax) 713-524-6446
info@polishmyconcrete.net
Manufacturer's Regional Representative
Jerry S. Maltz
Cell 713-825-7093
jerry@polishmyconcrete.com

2.04 RELATED MATERIALS

A. Neutralizing Agent:

1. Tri-sodium Phosphate or Baking Soda

B. Water:

1. Potable

PART 3- EXECUTION

3.01 SURFACE CONDITIONS:

A. Examine substrate, with installer present, for conditions affecting performance of finish. Correct conditions detrimental to timely and proper work. Do not proceed until unsatisfactory conditions are corrected.

B. Verify that base slab meets finish and surface profile requirements in Division 3 Section "Cast-In-Place Concrete," and Project Conditions above.

C. Prior to application, verify that floor surfaces are free of construction latents.

3.02.1 APPLICATION: Apparatus Bay 400 Grit Finish / Salt & Pepper - AFTER WALLS - NO COLOR

A. Floor to be prepared for TRCPS application with specified (WET ONLY) diamond grinding steps, followed by the application of RetroPlate99 and final polishing will be DRY. (Note: The exact number of grinding and polishing steps required will be determined by the flatness achieved by the concrete finisher, along with the desired look that is specified by the owner.) To achieve Totally Refined Polished Concrete each grit will require multiple grinding passes. In most case the initial 4-2 grinding process will require grinding passes north and south and passes east and west to properly prepare the concrete to achieve a Totally Refine Polished Concrete floor

1. Level 2 Finish: 400 Grit NEW CONCRETE After WALLS: – NO COLOR
   a1. Install control-joint material as specified. (SL-65)
   a. WET GRINDING ONLY starting with 50 grit hybrid/metal chip bonded diamond. (since the floors will be tilted to the drains DO NOT use metal bonded abrasives) The initial grind, 50 grit, should require as many as 4 – 6 grinding pass over the floor to achieve a clean and refined concrete slab. Grinding passes should include North/South & East/West & Crisscross to achieve Totally Refined Polished Concrete.

   b. After completion of initial grind, or some large portion of the floor, the owner/rep and architect will walk the floor with the polishing contractor to survey the cleaned and prepped slab to best view any unforeseen blemishes and determine the path to repair.

   c. Make needed repairs based on site visit. Repairs should be filled with StonClad epoxy & sand/stuff/dye to best match the final polished concrete. Repair(s) **must** be flush with the slab. Repairs must have the same shine as the polished concrete.

   d. Continue WET grinding using the 100 grit hybrid/metal chip bonded. The second grind, 100 grit, this grind should require as many as 2 - 4 grinding pass over the floor to achieve a clean and refined concrete slab.

   Thoroughly clean the floor for the application of TRCPS-25LH will be applied to the point of rejection, spiff coated and allowed to dry overnight prior to beginning the final polishing steps.
   e. EDGE GRINDING/POLISHING: This process includes WET grinding **ALL** (needed) Edges & Drains being polished using water-feed hand-held grinders starting with 50/60 grit rigid profile either stone abrasive or resin. The process will follow the same grits 100 & 200. Each edge grinding process will be performed at the same grit as the field to have the edges best match the field. Because this job is scoped to polish after

the interior walls are installed, this means that ALL of the edges will be polished to best match the field.

f. Continue WET polishing using 200 grit resin bonded diamonds followed with 400 grit resin bonded diamonds.
g. Thoroughly clean the floor allowing the concrete to dry.
h. Final steps to be Dry Polishing using 400 grit resin bonded diamond.

2.

a. Once the building has been closed-in and the building has been acclimated,
   1. Fill control joints. (FILL PRIOR TO STARTING POLISHING)
   2. Application of TRCPS-SVTIPS. THIS project is an OILY ENVIROMENT
b. Application of TRPC-SVTIPS is required for this project If project is an OILY ENVIROMENT
c. Prior to Grand Opening Burnish using 400 grit diamond polish pad. (If within 50 miles of our office we will burnish at NO CHARGE)

B. GRINDING & SEALING, HARDENING and POLISHING of CONCRETE SURFACE

1. Concrete must be in place a minimum of 28 days or as directed by the manufacturer before application can begin.
2. Application is to take place at the end of the project.
3. Only a certified applicator shall apply Acid Stain and TRCPS-25LH & TRCPS-SVTIPS. Applicable procedures must be followed as recommended by the product manufacturer and as required to match approved test sample.
4. Grinding and Polishing Equipment must be a multiple head walk behind machine of various size and weight, with diamond tooling affixed to the heads for the purpose of grinding concrete.
5. Edge Grinding & Polishing Equipment must be Wet grinders either hand held or walk behind.
6. This is a Wet & Dry process, contractor will need proper slurry extraction equipment and proper dust collection for final polishing steps.
7. Achieve waterproofing, hardening, dust-proofing, and abrasion resistance of the surface without changing the natural appearance of the concrete, except for the sheen.
8. Finish edges to within 1/4” of vertical surfaces where practical. Contractor must have wet edge grinding machines.
9. Polish to pre-determined level 400 grit based on test sample.

C. REPAIR WORK

1. Repair hole(s) if needed. Drill out all holes creating a key-way hard edge at the top of the hole. Holes to be filled using StoneClad from StonHard, sand, and necessary dyes to best match color and particle of sand of the existing slab at a final polish. All repairs must be ground flat using stone abrasive

2. Cracks/Pin hole(s) if need. Fill cracks using Quick Mender Lo from VersaFlex. Use dry concrete slurry/dust to best match the existing concrete for color.

3. Repair Spall(s) if needed. (Cut or Drill out all spalled edges, if possible cut a key-way hard edge at the top of the spall. Spalls to be filled using StoneClad from StonHard, gravel, sand, and necessary dyes to best match color and particle of sand of the existing slab at a final polish. Spalled joint line should be over filled ground flat and joint re-cut. All repairs must be ground flat using rigid diamond or stone abrasives.

D. EDGE WORK / TRENCH DRAINS

1. Option 1: This specification is written for AFTER THE WALLS that means that ALL the edges & trench drains will require edge grinding and polishing. Edge grinding to be accomplished using WET grinding process starting with stone abrasives or rigid grinding disk starting at 50/60 grit, 100 grit, 200 grit and 400 grit stone abrasive to match the body of the floor. Dry Polish using 400 resin after TRPC-25 has dried overnight.
2. Option 2: Border / Trim: Epoxy Paint 6” / 8” from walls. All painted edges must have the initial edge grinding to remove the cream from surface of the concrete to aid in the adhesion of the paint.

E. FLOOR JOINTS / CONTROL JOINTS: If this is a new slab, joint material is not recommended for installation for 90-120 after concrete placement to allow for the concrete time to shrink.

1. Re-cut all control joints prior to installation of joint material
2. If needed, tape off each line to eliminate any chance of staining from joint material.
3. Install full depth (unless otherwise told) and over fill.
4. Shave/cut off extra using new razor blades to cut as clean as possible

F. PROTECTIVE IMPREGNATOR / SEALER. If project is an OILY ENVIROMENT

1. If required, Seal Entire floor (oily situations) using TRPC-SVTIPS (Solvent Protective Penetrating Sealer) will allow oil to float on top of the surface.

3.03 WORKMANSHIP AND CLEANING:

A. The premises shall be kept clean and free of debris at all times.

B. Remove spatter from adjoining surfaces, as necessary.

C. Repair damages to surface caused by cleaning operations.

D. Remove debris from jobsite
1. Dispose of materials in separate, closed containers as provided by the owner, and in accordance with local regulations.

3.04 SPECIFIC QUALIFICATIONS / EXCLUSIONS: (NOTE: This section, though not mandatory, will greatly improve the understanding and necessary procedures for performing this work properly.)

A. Any unforeseen or hidden conditions requiring repair will be billed at time and materials basis.

B. Assumption that there is adequate access for electrical and water, and that adequate lighting is provided. 3 Phase 220 volt / 80 amps service required.

C. It is the responsibility of the owner to provide adequate waste slurry disposal.

D. That the floor has not been exposed to the elements. If weather damage has occurred, additional grinding will be at time and materials.

E. Removal of contamination of the slab by soil, foot prints, drag marks, welding marks, hydraulic fluids, or any other outside contaminant will be at time and materials, and will be performed to the best of ability, but without guarantee of removal.

F. Assumption that the TRPCS will be applied prior to the installation of any floor covering.

G. No other trades will be allowed in the area being worked on due to possible safety and floor contamination issues.

H. The areas to receive the TRPCS will be delivered to the applicator in clean and swept condition. All equipment and supplies will be removed prior to turning the space over to the applicator. If the applicator is required to clean the space, and/or move other's supplies, staging and equipment, it will be done at time and materials.

I. If a curing agent other than Ashford Formula is utilized that establishes a bond barrier and requires removal prior to the application of the TRPCS, this will be done at time and material.

J. PROTECTION OF THE FLOOR FOLLOWING THE APPLICATION OF THE TRPCS AND POLISHING IS THE RESPONSIBILITY OF THE OWNER.

3.05 PROTECTION:

A. Protect finished work until fully cured in accordance with manufacturer's recommendations.

B. Protection after the floor has been polished.

3.06 WARRANTY:

A. This process carries a 20-year warranty.

END OF SECTION 03 66 00

QUALIFICATIONS & QUALITY ASSURANCE

POLISHING CONTRACTOR: I acknowledge that all of the information below is true and accurate.
Signature of Company owner/management: X_____

****ALL WORK MUST BE DONE BY COMPANY EMPLOYEES; CONTRACTOR SHALL NOT SUB-CONTRACT ANY PORTIONS OF THIS SCOPE OF WORK ****

1. Company: Name: _____

   Principal: _____

   Phone #: _____

2. Years in Business: _____

3. Years Polishing Concrete (min. 7 years): _____

4. Certified by CPAA: yes / no

5. Certified by TRCPS: yes / no

6. Name of Sr. Crew Leader: _____

7. Years Sr. Crew Leader has worked for company: _____

8. Years Sr. Crew Leader has been polishing concrete (min. 5 years): _____

9. Do you own your equipment or do you rent your equipment: _____

10. Letter of Certification by TRCPS or Concrete Finish Manufacture.

11. List of 20 Projects of equal size: (Attach to cover page)

    a. Name of project: _____

    b. Location of project: _____

    c. Name of GC: _____

    d. Name of Project Manager: _____

    e. Name of Superintendent: _____

    f. Phone # of Superintendent: _____

g. Name of Architect Company:_____

12. List of last 5 projects: (Attach to cover page)

a. Name of project: _____

b. Name of GC: _____

c. Name of Superintendent: _____

d. Phone # of Superintendent: _____

e. Name of Architect Company:_____

SECTION 04 20 00 - UNIT MASONRY

PART 1 – GENERAL

1.01 SECTION INCLUDES

A. Concrete Masonry Units (CMU)

B. Brick Masonry

C. Mortar, grout, reinforcement, anchorages, flashing, and accessories shown, specified, or required to complete Work.

1.02 RELATED WORK

A. Section 05 50 00 Metal Fabrications: Steel masonry lintels.

B. Section 07 11 13, Bituminous Dampproofing

C. Section 07 21 00, Thermal Insulation

D. Section 07 92 00, Joint Sealants

E. Section 09 91 00, Painting

F. All Sections of Work built-in, adjacent to, or applied to unit masonry work.

1.03 REFERENCES

A. ASTM International (ASTM)
1. A153, Standard Specification for Zinc Coating (Hot-Dip) on Iron & Steel Hardware
2. A307, Specification for Carbon Steel Bolts and Studs, 60,000 PSI Tensile Strength
3. A615, Standard Specification for Deformed and Plain Billet-Steel Bars for Concrete Reinforcement
4. A706, Standard Specification for Low-Alloy Steel Deformed Bars for Concrete
5. C67, Standard Test Methods for Sampling and Testing Brick and Structural Clay Tile
6. C73, Standard Specification for Calcium Silicate Masonry
7. C90, Standard Specification for Loadbearing Concrete Masonry Units
8. C140, Standard Test Methods of Sampling and Testing Concrete Masonry Units and Related Units
9. C144, Standard Specification for Aggregate for Masonry Mortar
10. C150, Standard Specification for Portland Cement
11. C207, Standard Specification for Hydrated Lime for Masonry Purposes
12. C270, Standard Specification for Mortar for Unit Masonry
13. C331, Standard Specification for Lightweight Aggregates for Concrete Masonry Units
14. C404, Standard Specification for Aggregates for Masonry Grout

15. C476, Standard Specification for Grout for Masonry
16. C780, Standard Test Method for Preconstruction and Construction Evaluation of Mortars for Plain and Reinforced Unit Masonry
17. C979, Standard Specification for Pigments for Integrally Colored Concrete
18. D1751, Standard Specification for Preformed Expansion Joint Filler for Concrete Paving and Structural Construction (Nonextruding and Resilient Bituminous Types)
19. E119, Standard Test Methods for Fire Tests of Building Construction and Materials

B. Underwriters' Laboratories, Inc. (UL)

1.04 QUALITY ASSURANCE

A. Where requirements of this Section are in conflict with requirements noted on the Structural Drawings, the Structural Drawings shall take precedence. Refer to Structural Drawings for information on load-bearing CMU walls.

B. Fire Performance Characteristics: Where indicated or required, provide materials and construction which are identical to assemblies whose fire endurance has been determined by testing in compliance with ASTM E119 by U.L. or other recognized testing and inspection organization or by other means, acceptable to authority having jurisdiction.

C. Single Source Responsibility:
1. For Masonry Units: Obtain masonry units of uniform texture and color, or a uniform blend within the accepted ranges for those characteristics, from one (1) manufacturer for each different product required for each continuous surface or visually related surfaces.
2. For Mortar and Grout Materials: Brands of cementitious materials and admixtures, and the source of supply of sand and aggregates shall remain the same throughout the Work where exposed to view and where not scheduled to receive a subsequently applied finish, i.e. parging, painting, etc., unless directed otherwise in writing by the Architect.
3. Contractor's Responsibility: Contractor performing Work of this Section shall be responsible for coordinating with others performing work which is built-in or adjacent to unit masonry work.

1.05 SUBMITTALS

A. Product Data: Submit schedules, charts, literature, and illustrations to indicate the performance, fabrication procedures, product variations, and accessories.

B. Samples: Two (2) sets of color chips representing manufacturer's full range of available colors and textures of each masonry unit for Architect's selection and approval. Once narrowed down, provide two (2) full brick samples of selected masonry unit.

C. Sample Panel(s):
1. Do not start masonry until Architect has approved samples.
2. Sample panel shall be a minimum of 4 feet long by 14 feet high or larger as needed to show selected color range and texture, bonding, joint shape, and quality of workmanship. Include an expansion joint, and any specialty details,

such as reveals, chamfers, etc. Include mock-up of installation of thru-wall flashing at foundation sill and lintel above openings.
3. A separate panel for each type of masonry used is required.
4. Sample panel(s) shall remain at the jobsite until all masonry is completed.
5. Installed materials shall be visible and integrated into adjacent materials.
6. Include all backup wall construction including, but not limited to: brick ties, air/waterproofing, insulation, cavity drainage material.

D. Certification: Submit manufacturer's affidavit that materials used in Project contain no asbestos.

E. Mortar and Grout Mix Designs: Submit two (2) copies of proposed mortar and grout mix designs to Owner's testing laboratory.

F. Special Shapes: Provide two (2) samples of all special shapes indicated.

1.06 PRE-INSTALLATION CONFERENCE

A. Refer to Section 01 31 00, Project Management and Coordination.

1.07 TESTS AND INSPECTIONS

A. Materials and installation of masonry shall be subject to testing and inspection by an independent testing laboratory. Such tests and inspections shall not relieve Contractor of responsibilities for providing materials and procedures which comply with Contract Documents. Promptly remove and replace materials which do not comply.

B. Owner will select Inspection and Testing Laboratory and will pay for all Work required by Inspection and Testing Laboratory.

1.08 DELIVERY, STORAGE AND PROTECTION

A. Deliver and store materials in dry protected areas off ground. Keep free of stain or other damage before, during and after installation. Replace any damaged material at no cost to Owner.

B. During freezing weather, protect masonry units with tarpaulins or other suitable material. Keep free of stain or other damage before, during and after installation. Replace damaged material at no cost to Owner.

C. Protect reinforcement and accessories from elements.

1.09 SITE CONDITIONS

A. Cold Weather Protection:
1. No masonry shall be laid when the temperature of the outside air is below 40 degrees F, unless protection measures are employed and pre-approved by the Architect.
2. Protection measures for cold weather erection include maintaining space and masonry unit temperatures of at least 40 degrees F for 48 hours prior to and after erection.

B. Hot Weather Protection:
1. When the mean daily temperature exceeds 100 degrees F or exceeds 90 degrees F with a wind velocity greater than 8 mph, fog spray all newly constructed masonry until damp, at least three (3) times a day until the masonry is three (3) days old.

1.10 BRACING OF MASONRY DURING ERECTION

A. All masonry shall be adequately braced at all times during erection.

1.11 COORDINATION

A. Openings and chases for heating, plumbing, electrical ducts, pipes, and conduits shall be built into masonry walls as required. Provide for installation of bolts, toggles, flashings, beams, anchors, hangers, nailing strips, wall plugs, and frames as required. Consult other trades in advance and make provisions for installation of their work to avoid cutting and patching. Coordinate installation of steel reinforcement for reinforced masonry. Coordinate placement of concrete in masonry beams, lintels, soffits, and pilasters.

B. Contractor performing Work of this Section shall be responsible for and coordinate with work of Division 7 and all Sections of Work built-in, adjacent to, or applied to unit masonry work.

1.12 WARRANTY

A. Warrant the Work specified herein for one (1) year against becoming unserviceable or causing an objectionable appearance resulting from either defective or nonconforming materials and workmanship.

B. Defects shall include, but not be limited to, the following:
1. Noticeable deterioration of unit or mortar finish.
2. Chalking or dusting excessively.
3. Changing color in irregular fashion.
4. Cracking or spalling.
5. Releasing from substrate.
6. Staining or discoloring, including efflorescence.

PART 2 – PRODUCTS

2.01 MATERIALS

A. Concrete Masonry Units (CMU/Block):
1. Type/Sizes:
a. Concealed cavity block and interior block, unless otherwise noted: Regular smooth face units with 8 inch by 16 inch face dimensions as shown on drawings or required, 4 inch, 6 inch, and 8 inch depths as indicated on drawings.
i. Color: standard
2. Integral Water Repellant (In exterior exposed CMU): “Dry-Block Block Admixture” integral water repellant admixture as manufacturer by W.R. Grace & Co., or equal.

3. Specification: Comply with ASTM C90 (Class D-2 (2 hour) and Class B-4 (4 hour)) block at rated walls)
   a. Grade: Type N, highest standard for typical cavity block and interior use. Type S, for exterior exposed masonry walls.
   b. Aggregate: Lightweight in accordance with ASTM C331
4. Curing: Rotary kiln process.
5. Provide bullnose units at all outside corners of interior CMU. Field-ground unacceptable.
6. Provide bond beams, control joints, jambs, lintels, soaps, cap blocks, and fillers to match and compliment block units as shown or required.
7. Approved Manufacturers:
   a. Headwaters Building Products
   b. Revels Block & Brick Co., Inc.
   c. Texas Building Products, Inc.

B. Face Brick: Facing brick complying with ASTM C 216.
   a. FBX; Grade SW
   b. Unit Compressive Strength: Provide units with minimum average net-area compressive strength of 3350 psi (23.10 MPa).
   c. Initial Rate of Absorption: Less than 30 g/30 sq. in. (30 g/194 sq. cm) per minute when tested according to ASTM C 67.
   d. Efflorescence: Provide brick that has been tested according to ASTM C 67 and is rated *not efflorescd*.
   e. Approved Manufacturers:
      i. Interstate Brick supplied by Upchurch Kimbrough Company ???
   f. Color: Champions Fire Station Custom Blend ????????
   g. Texture: Grain
   h. Size (Actual Dimensions): 3-9/16 inches wide by 3-9/16 inches high by 15-9/16 inches long (utility).
   i. Running Bond Pattern
   j. FBX; Grade SW

C. Latex Additive: Manufacturer's standard water emulsion, serving as replacement for part or all of gaging water, of type specifically recommended by latex-additive manufacturer for use with field-mixed portland cement mortar bed, and not containing a retarder.

D. Calcium Silicate Masonry Units: ASTM C 73, Grade SW and as follows

1. Size & Texture:
   a. (3-5/8”w x 11-5/8”t x 23-5/8”l); Rocked finish on exposed faces and ends
   b. Color – Renaissance Sunset
   c. Approved Manufacturers:
      i. Arriscraft International supplied by Upchurch Kimbrough Company

E. Flashing and Accessories:
1. Copper Laminated Flashing: See application guidelines below for locations.
   a. Flashing: A full sheet of copper weighing five (5) ounces per square foot coated or bonded on both sides with one (1) of the following:
      i. Modified asphalt compound coated.

ii. Asphalt saturated, waterproof glass fiber laminated fabric.

b. Approved Manufacturers:
   i. Advanced Building Products, Inc.
   ii. Hohmann & Barnard, Inc.
   iii. Sandell Manufacturing Company, Inc.
   iv. York Manufacturing, Inc.

c. Mastic: Manufacturer recommended asphalt troweled mastic for sealing copper laminated flashings

2. Asphalt-Free Copper Fabric Flashing (Contractors Option):
   a. Glass fabric scrim bonded to a full sheet of copper for general thru-wall flashing as an alternative to asphalt coated copper specified above and where sealant compatibility is required. Provide manufacturers approved seam tape.
   b. Approved Product / Manufacturer:
      1. Multi-flash 500 as manufactured by York Manufacturing, Inc,; or Copper-Tuff as manufactured by Hohmann & Barnard, Inc. (No other substitutions)
3. Membrane Flashing: See application guidelines below for locations.
   a. Self-Adhered Flexible Flashing: 40-mil, rubberized asphalt adhesive reinforced flashing with a high density cross laminated polyethylene film. Provide compatible substrate primer as instructed by manufacturer.
   b. Approved Products / Manufacturers:
      i. “TW-Thru Wall Flashing” manufactured by Tamko Waterproofing.
      ii. “Perm-A-Barrier” manufactured by W. R. Grace & Co.
      iii. “Blueskin TWF” manufactured by Henry Company
      iv. “Bitu-Rap” manufactured by Nervastral, Inc.
      v. “York Seal ES” manufactured by York Manufacturing, Inc.
4. Substrate Primer: As instructed by membrane manufacturer
5. Termination Bar: 1/8 inch thick by 1 inch minimum wide stainless steel, pre-punched holes at 12 inch centers maximum, with self-tapping screws.
6. Reglets: Manufacturer recommended 26 gauge galvanized or 16 ounce copper, as required for compatibility of flashing product.
7. Drip Edge Flashing: Preformed 26 gauge minimum, stainless steel for use below weep conditions in conjunction with membrane products as a finished edge where indicated or required.
8. Cavity Drainage Material: Non-woven polymer textile product in random pattern with voids no greater than 1/4" in diameter. Sheets or strips full depth of cavity and installed 24" high. Archovations, Inc.; CavClear Masonry Mat.

E. Mortar:

1. Materials: (Unless stated otherwise on Structural Drawings)
   a. Portland Cement: ASTM C150, Type 1.
   b. Hydrated Lime: ASTM C207, TYPE “N”, typical. Use TYPE “S” only for load-bearing masonry.
   c. Aggregate: Sand conforming to ASTM C144
   d. Water: Clean and potable
   e. Admixtures For Mortar:
      i. General: Do not use calcium chloride
      ii. Concrete Masonry Units: Shall be standard color.

iii. Integral Water Repellant (In mortar of exterior exposed CMU): "Dry- Block Mortar Admixture" integral water repellant admixture as manufacturer by W.R. Grace & Co., or equal. Note: Water repellent block admixture and mortar admixture are not interchangeable.

2. Mix Design: (Proportions by volume) (Unless stated otherwise on Structural Drawings)
   a. Typical, Non-Load Bearing Masonry
      i. Type: ASTM C270, Type "N"
      ii. Proportions: 1 part cement, 1 part hydrated lime and 6 parts sand to provide a compressive strength of 750 psi in 28 days. Do not use calcium chloride.
   ii. Load Bearing Structural Masonry
      i. Type: ASTM C270, Type "S"
      ii. Proportions: 1 part cement, 1/2 part hydrated lime and 4-1/2 parts sand to provide a compressive strength of 1800 psi in 28 days. Do not use calcium chloride.

F. Grout:

1. Materials: (Unless stated otherwise on Structural Drawings)
   a. Hydrated Lime: ASTM C207, TYPE "S"
   b. Portland Cement: ASTM C150, Type 1.
   c. Water: Clean and potable
   d. Aggregates:
      i. Course aggregate shall conform to ASTM C404.
      ii. Fine aggregate shall conform to ASTM C144.
2. Mix Design: (Unless stated otherwise on Structural Drawings)
   a. Comply with ASTM C476 to provide a compressive strength of 2,500 psi in 28 days, unless noted otherwise. Do not use calcium chloride.
      i. Fine Grout: Fine grout conforming to ASTM C476 and consisting of 1 part Portland cement, 0 to 1/10 part lime and 2-1/4 to 3 parts sand by volume.
      ii. Course Grout Mix: Course grout conforming to ASTM C476 and consisting of 1 part Portland cement, 0 to 1/10 part lime and 2-1/4 to 3 parts sand, and 1 to 2 parts course aggregate.

G. Reinforcement, Anchors and Tie Systems:

1. General: Reinforcement used in all wythes shall be galvanized after fabrication in accordance with ASTM A153, Class B-2.
2. Approved Manufacturers include the following:
   a. Dur-O-Wal
   b. Heckmann Building Products
   c. Hohmann & Barnard, Inc
3. At solid multiple wythe masonry walls and single wythe masonry walls, (Interior partitions) use #9 gauge truss type reinforcing. Pre-fab corners and tees shall be used at all wall corners and intersections; width shall be two (2) inches less than nominal thickness of walls. Dur-O-Wal "Truss" at single wythe; "Trirod" at multiple, or Architect approved equal.

4. At Double Wythe Cavity Walls: Use Hot-dipped galvanized, #9 gauge truss type with 3/16 inch adjustable pintle wall ties. Width of truss reinforcement

shall be 2 inches less than the nominal thickness of wall. 3/16 inch wall tie double eye sections welded at 16 inches o.c. extended as required for insulation thickness. Pre fab corners and tees shall be used at all wall corners and intersections. Dur-O-Wal "Dur-O-Eye", or Architect approved equal.

5. At Masonry Anchored to Steel Spandrel Beam and Columns: Hot-dipped galvanized, No. 315 Anchor and No. 316 Pintle Tie manufactured by Heckmann Building Products, Inc., or Architect approved equal. Anchors detailed on Structural Drawings supersede.
6. At Veneer Anchored to Light Gauge Steel Framing: Hot-dipped galvanized, No. 75HE Pos-i-Tie System utilizing self-tapping screw for steel studs with 5/8 inch barrel length, and 4 inch triangle wire tie for 2 inch cavity manufactured by Heckmann Building Products, Inc., or Architect approved equal. Anchors detailed on structural drawings supersede. Attachment screws shall be corrosion resistant type as recommended by manufacturer to suit application. Adjust wire tie size as required to conform with cavity depth if other than 2 inch.
7. Control Joint Anchor: Equal to Heckmann Building Products, Inc. No. 351 Anchor.
8. Corrugated Ties: Not Permitted

H. Block Insulation: Provide at all exterior CMU walls.
1. Foamed-In Place Block Insulation:
   a. Type: Two (2) component system consisting of amino-plast resin and a catalyst foaming agent surfactant.
   b. Features:
      i. Designed to completely fill irregular or hard-to-reach spaces.
      ii. Can be installed in both new and existing concrete masonry unit construction.
      iii. Excellent energy and sound insulation values.
      iv. No settling or expansion after installation.
      v. Superior fire and safety performance.
      vi. No CFC’s or HFC’s.
      vii. Safe for the environment.
      viii. Approved Products/Manufacturers: “Core-Fill 500” manufactured by Tailored Chemical Products, Inc., Hickory, NC; (828) 322-6512, Polymaster R-501 Foam Insulation manufactured by Polymaster of Houston, (713) 856-6318.or Architect approved equivalent.

I. Miscellaneous Materials: (As shown or required)
1. Reinforcing Steel: ASTM A615, Grade 60.
2. Forms: Form grade plywood with wood studs and wales as required.
3. Shores: Patented shores of design and manufacture sufficient to safely support imposed loads.
4. Premolded Filler: Fibrous mastic strips containing 35 percent to 50 percent asphaltic impregnation, ASTM D1751.
5. Cleaner: "TexTrol" chemical cleaner manufactured by AHI Supply Co, or Architect approved equal.
6. Flashing Cement: "Nervaplast" cold setting mastic manufactured by Nervastral, Inc., or Architect approved equal.
7. Building Felt: No. 15 asphalt saturated felt, ASTM D226.
8. Control Joints: "Regular Rapid Control Joint" preformed gasket manufactured by Dur-O-Wal, Inc., or Architect approved equal.

9. Dovetail Anchors: 16 gauge galvanized dovetail corrugated masonry anchor, 1 inch x 3-1/2 inch manufactured by AA Wire Products Co., Heckman Building Products, Inc., Dur-O-Wal, Inc., Hohmann & Barnard, Inc., Masonry Reinforcing Corporation of America, or Architect approved equal. DW-10HS anchors for veneer ties at metal studs.
10. Steel Shapes and Plates: As shown on drawings and specified in Section 05 50 00 Metal Fabrication.
11. Headed Stud Anchor: Welded by full-fusion process as furnished by TRW Nelson Stud, Welding Division, or Architect approved equal.
12. Bolts: ASTM A307. Furnish with carbon steel washers.
13. Deformed Bar Anchors: Welded by full-fusion process as furnished by TRW Nelson Stud Welding Division, or Architect approved equal.
14. Reinforcing Bars to be Welded: ASTM A706.
15. Masonry Color: Iron oxide pigment conforming to ASTM C979 in color(s) selected by Architect, shall be inert, stable to atmospheric conditions, sunfast, weather resistant, alkali resistant, water insoluble, and free of fillers and extenders, as manufactured by ChemSystems, Inc., Davis Colors, Solomon Grind-Chem Service, Inc., or Architect approved equal.

2.02 MASONRY STRENGTH

A. Ultimate compressive strength of masonry as required by design and determined by prism tests shall not be less than 1,500 psi, unless stated otherwise in Structural Drawings.

PART 3 – EXECUTION

3.01 FORMS AND SHORES

A. Provide forms and shores sufficiently strong and rigid as required to support soffits, beams, and lintels during construction.

B. Build forms to conform to shape, line, and dimension of masonry members as detailed, substantial and sufficiently tight to prevent leakage of mortar, grout or concrete. Properly brace forms, or tie together, so as to maintain position and shape.

3.02 PREPARATION OF MATERIALS

A. Concrete Masonry Units:
   1. Where cutting is required, masonry shall be cut with a sharp masonry saw.
   2. Ensure concrete masonry units to receive sand fill are ready for filling and cutouts are protected from material spillage.

B. Mortar and Grout:
   1. Use suitable containers for material measurement. Measuring sand by the shovel is not acceptable.
   2. Thoroughly machine mix a minimum of five (5) minutes after all materials are in mixer.
   3. Consistency will completely fill all spaces intended to receive grout.
   4. Use within 2-1/2 hours of initial mixing.

5. Mortar or grout shall not be used if curing has progressed to yield a stiff consistency.

C. Reinforcement:
1. Reinforcement shall be free from loose rust and other coatings that would reduce the bond.
2. Cut accurately to length and bend by such methods as will prevent injury to the material.
3. Straighten out kinks or bends.

D. Flashing:
1. Locations: Install in exterior walls to divert moisture within walls to exterior surfaces.
2. Bed Joints: Coordinate work with Division 4, Masonry. Install flashings between two (2) thin layers of masonry mortar without increasing thickness of mortar joint. Keep outer edge of flashing material back from face of masonry.
3. Adjacent Work: Protect work by masking, covering, or other precautionary methods. Remove protection when no longer necessary.
4. Separate copper flashing from dissimilar materials.
5. Protect membrane flashing from overexposure to direct sunlight.

3.03 INSTALLATION

A. General:
1. Do not use chipped or cracked concrete masonry units (CMU) and face brick, where exposed to view.
2. Use masonry saws to cut and fit exposed units.
3. Exposed masonry at exterior corners shall be solid units.
4. Clean surface of masonry smooth and free from projections which might puncture or otherwise damage flashing material.
5. Place through-wall flashing as follows:
   a. Place on bed of mortar and cover with mortar.
   b. Provide at steel columns and beams in exterior masonry walls and elsewhere as indicated on the drawings or required.
   c. Install asphalt laminated copper membrane as base flashing at all exterior cavity walls below weep holes.
   d. Install at material transitions inside exterior cavity walls, roof edge/exterior wall transitions, masonry joints (control/expansion) inside exterior cavity walls, exterior wall sill/weep conditions, exterior door and window frame perimeters, roof deck/exterior wall transitions, exterior wall penetrations (i.e. pipe, conduit, ducts, etc.). Provide membrane at all joints, holes, gaps or openings to ensure a continuously sealed building envelope.
6. Lay masonry units plumb, true to line, and with level courses accurately spaced within allowable tolerances.
7. Do not furrow bed joints.
8. Stop off horizontal run by racking back in each course; toothing is not permitted.
9. Adjust units to final position while mortar is soft and plastic.
10. If units are displaced after mortar has stiffened, remove, clean joints and units and re-lay with fresh motor.
11. When joining fresh masonry to set or partially set masonry:

a. Remove loose masonry units and mortar
b. Clean and lightly wet exposed surface of set masonry prior to laying fresh mortar.

B. Metal Door Frames: Fill jamb frames solid with mortar. Build in anchors.

C. Lintels and Bond Beams: Provide reinforced unit type, except where steel lintels are shown. Use reinforcing bars as shown on the drawings. Completely fill in lintel block and bond beams with grout. Provide 8 inch bearing at end of lintels.

D. Corners: Provide prefab corners and tees.

E. Partition Tops: Allow space at top of horizontal spanning walls for compressible joint back-up and sealant as specified in Sealant section. Anchor top of walls to deck or structure with steel angles as indicated in structural drawings.

F. Mortar Beds:
1. Place mortar in a manner which will result in the development of adequate bond between the masonry and the reinforcement.
2. Lay units with full mortar coverage on horizontal and vertical joints in all courses.
3. Provide sufficient mortar on ends of masonry unit to fill head joints.
4. Rock closures into place with head joints thrown against two adjacent masonry units in place.
5. Do not pound corners or jambs to fit stretcher units after setting in place.
6. Where adjustment to corners or jambs must be made after mortar has started to set, remove mortar and replace with fresh mortar.

G. Mortar Joints and Patterns:
1. Lay CMU in running bond pattern, unless noted otherwise.
2. Provide flush joints where concealed from view and where dampproofing is scheduled.
3. Provide standard concave tooled joint where masonry is exposed to view for brick and CMU, typically.
4. Natural stone should be a minimum of 3/16” thick and a maximum 3/8” thick. All other mortar joints to be of consistent size.

H. Reinforcement, Anchor and Tie Systems:
1. General:
   a. Completely embedded in mortar or grout.
   b. All reinforcement consisting of bars or wire 1/4 inch or less in diameter embedded in the horizontal mortar joints shall have no less than 5/8 inch mortar coverage from the exposed face.
   c. Veneer anchors at exterior sheathed covered metal stud exterior walls shall be attached on outside face of sheathing using cadmium plated sheet metal screws. Spacing shall be same as stud spacing o.c. horizontally and 16 inches o.c. vertically.
   d. Veneer anchors at Interior masonry walls with metal stud back-up shall be the same as Paragraph “d” above, except anchors shall be attached directly to metal stud with recommended corrosion resistant fasteners in accordance with manufacturer’s recommendations.
   e. At intersection of all perpendicular masonry walls provide two (2) vertical rows of ladder type reinforcing at 16 inches o.c. vertically.

f. Weld veneer anchors to structural steel in accordance with manufacturer's recommendations. Touch-up steel shop paint and galvanized coating on anchor with proper touch-up paint to match damaged coating in accordance with manufacturer's recommendations.
g. In cavity walls with CMU back-up, embed truss type horizontal reinforcement with integral adjustable pintle wall ties every 16 inches o.c. vertically.
h. Splices in reinforcement: Splices may be made only at such points and in such manner that the structural strength of the member will not be reduced. Lapped splices shall be eight (8) inches. Welded or mechanical connection shall develop the strength of the reinforcement.
i. Corrugated strap ties: Not permitted.
j. Place joint reinforcement in the first two (2) bed joints above and the first two (2) bed joints below masonry openings. Extend extra reinforcing two (2) feet beyond jambs.
k. Provide masonry ties at floor and roof decks as indicated.

I. Flashing:
1. Follow manufacturer's instructions for installation in either bed joint, friction fit, or mechanically fastened with a termination bar.
2. Application Guidelines - Install flashing at the following locations:
a. Membrane Flashing: Material transitions inside exterior cavity walls, roof edge/exterior wall transitions, masonry joints (control/expansion) inside exterior cavity walls, exterior door and window frame perimeters, roof deck/exterior wall transitions, exterior wall penetrations (i.e. pipe, conduit, ducts, etc.). Provide membrane at all joints, holes, gaps, or openings to ensure a continuously sealed building envelope. Utilize primer on substrates as instructed by manufacturer.
b. Copper Flashing: Exterior wall sill/weep conditions, exterior door and window head/weep conditions, masonry wall cap flashing.
3. Apply substrate primer as instructed by membrane manufacturer to suit condition.
4. Provide drip edge flashing at weep conditions with membrane flashing. Cut membrane flush with outside edge of brick over top of drip edge flashing to alleviate exposure to UV degradation and deterioration of asphalt membrane.
5. On Horizontal Surfaces: The flashing shall be laid in a slurry of fresh mortar and topped with a fresh full bed of mortar. The flashing shall be cut flush with the exterior face of the wall after being left exposed for inspection purposes only. Flashing shall be carried through the wall, turned up where possible to facilitate drainage through the weepholes, then carried upward across the cavity a minimum of six (6) inches. Flashing will then be secured in back wall with mortar joint, reglet, or termination bar.
6. On Vertical Surfaces: Surfaces receiving the flashing shall be sufficiently spotted with asphalt mastic to hold in place until masonry is set. Secure in back wall with mortar joint, reglet, or termination bar.
7. Foundation Sill Dampproofing: The flashing for foundation sills shall be laid in a slurry of fresh mortar and topped with a fresh full bed of mortar. The flashing shall be cut flush with the exterior face of the wall after being left exposed for inspection purposes only. Flashing shall be sloped across the cavity and turned up the wall a minimum of ten (10) inches and secured to back wall with mortar joint, reglet, or termination bar. Where sill and column meet, flashing shall be brought up a minimum of ten (10) inches up the column.

8. Thru-Wall Flashing: Shall be cut flush with the exterior face of the wall after being left exposed for inspection purposes only. Carry flashing through the wall, turned up where possible to facilitate drainage through the weepholes, then carried upward across the cavity a minimum of six (6) inches, unless noted otherwise, and secure in back wall with mortar joint, reglet, or termination bar.
9. Cavity Wall: Flashing shall be laid in a slurry of fresh mortar and topped with a fresh full bed of mortar. Flashing shall be cut flush with the exterior face of the wall after being left exposed for inspection purposes only. Flashing shall be carried through the wall and upward across the cavity a minimum of six (6) inches, unless noted otherwise, and secured in the back wall with mortar joint, reglet, or termination bar. Vertical membrane joints shall be secured with termination bar as instructed by membrane manufacturer.
10. Heads and Sills: Flashing for heads and sills shall be cut flush with the exterior face of the wall after being left exposed for inspection purposes only. Flashing shall be carried through the wall and upward across the cavity a minimum of six (6) inches, unless noted otherwise. Head flashing shall be carried six (6) inches beyond both end of the steel lintel. Both head and sill flashing shall be turned up at the sides to form a pan. All corners shall be folded, NOT CUT. Install weepholes.
11. Spandrels: Spandrel flashing shall start from the outside toe of the shelf angle, go up the face of the beam and then through the wall, turned up on the inside not less than two (2) inches. Install weepholes.
12. Parapet or Coping: Flashing for parapets or coping sills shall be laid in a slurry of fresh mortar and topped with a fresh full bed of mortar. Flashing shall be cut flush with the exterior face of the wall after being left exposed for inspection purposes only. Weepholes shall be installed immediately on top of the flashing.
13. Lengths: Install flashings without longitudinal joints within walls, if possible. If required materials are not available in a single width, join by lapping material minimum two (2) inches and seal joint throughout its length with adhesive.
14. End Joints: Avoid end joints in flashing. When end joints are necessary, lap flashing minimum six (6) inches and seal joint continuously with adhesive.
15. Penetrations: Where anchors, pipes, and inserts penetrate flashing, make opening in flashing snug and seal with adhesive.
16. Reglet Termination: Insert wedge into place and seal carefully with adhesive.
17. Termination Bar: Install flashing with termination bars in accordance with manufacturer's instructions.
18. Top Coat: After flashing material is in place (except in masonry joints where bond and mortar is required) trowel full 1/8 inch protective coating or mastic on all flashing faces.

J. Laying Masonry: Lay units plumb, level, and true to line with full head and bed joints. Butter ends of masonry with sufficient mortar to fill head joints. Do not furrow bed joints. Slope top of bed joint toward center of wall to minimize amount of mortar forced into grout space. Remove mortar, protruding from joints into grout space, before pouring grout.

K. Reinforcing Bars:
1. Hold vertical bars in position at top and bottom and at intervals not exceeding eight 8 feet-0 inches with a minimum clearance of 1/4 inch from masonry and not less than one (1) bar diameter between bars.

2. When a foundation dowel is not in alignment with a vertical block cell or pilaster, slope it not more than one (1) horizontal in six (6) vertical to bring it into proper alignment before grouting.
3. Place horizontal reinforcing bars in continuous masonry courses, consisting of bond-beam or trough block units, and solidly grout in place.
4. Use straight reinforcing bars except for bends around corners and where bends or hooks are detailed on plans.
5. Lap reinforcing steel 40 bar diameters minimum where spliced and wire together.

L. Grouting: Where detailed place grout in reinforced masonry beams, walls, columns, and pilasters. All cells and spaces containing reinforcing bars shall be filled with grout. Wherever possible grouting shall be done from inside face of masonry. Exercise extreme care to prevent grout from staining face of masonry. Immediately remove any spilled grout from face and top of masonry.
1. Prior to grouting clean space so that all spaces to be filled with grout do not contain mortar projections greater than 1/2 inch, mortar droppings or other foreign material. Grout shall be placed so all spaces designated to be grouted shall be filled with grout and grout shall be confined to those specific spaces.
2. Grout materials and water content shall be controlled to provide adequate fluidity for placement, without segregation of constituents and shall be mixed thoroughly.
3. Between grout pours a horizontal construction joint shall be formed by stopping all wythes at the same elevation and with grout stopping a minimum of 1-1/2 inches below a mortar joint, except at top of wall. Where bond beams occur, stop grout pour a minimum of 1/2 inch below top of masonry.
4. Reinforcement shall be placed prior to grouting. Bolts shall be accurately set with templates or by approved equivalent means and held in place to prevent movement.
5. Segregation of grout materials and damage to masonry shall be avoided during the grouting process. Adequately brace masonry to prevent displacement or cracking during grouting operations.
6. Grout shall be consolidated by mechanical vibrator during placing, before loss of plasticity, in a manner to fill grout space. Grout pours greater than 12 inches shall be reconsolidated by mechanical vibration to minimize voids due to water loss. Grout pours 12 inches or less in height shall be mechanically vibrated, or puddled.
7. Grout shall not be handled nor pumped utilizing aluminum equipment.

GROUT TYPE	GROUT POUR MAX. HEIGHT (FEET)	LEAST CLEAR DIMENSIONS		CLEANOUTS REQUIRED
		Width of Grout Space (In.)	CMU Cell Dim. Dims. (In. x In.)	
Fine	1	3/4	1-1/2 x 2	No
Fine	5	1-1/2	1-1/2 x 2	No
Fine	8	1-1/2	1-1/2 x 3	Yes
Coarse	1	1-1/2	1-1/2 x 3	No
Coarse	5	2	2-1/2 x 3	No
Coarse	8	2	3 x 3	Yes

8. Size and height limitations of grout space or cell shall be as follows:

a. Clear dimension is the cell or grout space width less mortar projections.
b. Grout space width shall be increased by the horizontal projection of the diameters of horizontal bars within the cross section of the grout space.

9. Place grout in lifts not exceeding 8 feet-0 inches.

M. Concreting: Supervise placing of concrete in cores of masonry beams and lintels and over masonry soffits where structural concrete is detailed. Report discrepancies or procedures which may adversely affect performance of masonry work.

N. Weepholes:

1. Provide weepholes above all thru-wall flashings where weepholes occur at the base of the wall. The mason shall coordinate the location of the thru-wall flashings with the location of the sidewalks on the civil engineering drawings. Both weepholes and thru-wall flashings shall be above the first course of masonry above the sidewalks. Pay particular attention to areas near exterior doors.
2. Ensure cavity drainage protection is properly installed.
3. Leave head joint free and clean of mortar. Provide a temporary strip of rope at each weep to be removed upon completion of panel.
4. Spacing: 32 inches on center maximum.
5. Keep weepholes and area above flashing free of mortar droppings.
6. Coordinate weep holes to be located above sidewalks and paving.

O. Sealant Joints:

1. Allow for sealant joints around outside perimeters of exterior doors, window frames and other wall openings.
2. Uniform depth: 3/4 inch.
3. Uniform width: As shown on the drawings but not less than 1/4 inch.
4. Provide sample for Architect's approval.
5. Refers to drawing for locations and details of accent joints.
6. Color shall typically match adjacent masonry. Sealant shall change color vertically if masonry color changes.

P. Movement Joints: (Expansion Joints and Control Joints

1. Locate expansion and control joints as shown on drawings, or if not shown, comply with the following:
   a. General:
      i. Vertical expansion joints shall be placed in the veneer wythe and control joints shall be placed in the concrete masonry wythe, although they do not necessarily have to be aligned.
      ii. Mortar and joint reinforcement shall not bridge veneer movement joints.
      iii. Mortar joints which stop at the expansion joint cavity shall be struck flush with the masonry unit, producing a continuous flat surface for the sealant to adhere to.
   b. Vertical Expansion Joints:
      i. Locate expansion joints on long straight walls without openings maximum 25 feet-0 inches.
      ii. Locate expansion joints at the corner of walls perpendicular to one another. In instances, where the joint is not desired at the corner, the expansion joint shall be located within 10 feet-0 inches of the corner

in either wall, but not necessarily both. The spacing of expansion joints around a corner shall not exceed the spacing of expansion joints in a straight wall. For example, if the spacing between expansion joints on a straight wall is 25 feet-0 inches, then the spacing of expansion joints around a corner could be 10 feet-0 inches on one side of the corner and 15 feet-0 inches on the other side. Joint reinforcement may be added around wall corners to provide added tensile strength to the corner, but joint reinforcement shall not bridge the expansion joint.

iii. Change sealant color as adjacent masonry color changes. Coordinate with Architect where multi-masonry colors exist.

c. Offsets and Setbacks:

i. Locate expansion joints at 10 feet-0 inches maximum on one side of the offset or setback. The spacing of expansion joints around an offset or setback shall not exceed the spacing of expansion joints in a straight wall. See expansion joints at corners of perpendicular walls to one another above for example of spacing.

d. Openings (Doors and Windows):

i. Locate vertical expansion joints along the edge or jamb of the opening of windows and doors. Single opening windows and doors under 6 feet-0 inches in width shall have expansion joint on one (1) side of the edge or jamb of the opening as determined by the Architect, unless shown otherwise on drawings. Windows and doors 6 feet-0 inches and over in width shall have expansion joints on both sides of the edge or jamb of the opening.

ii. Where masonry above an opening is supported by shelf angles attached to the structure, a vertical expansion joint shall be located alongside the opening, continuing through the horizontal support.

iii. Where masonry above the opening is supported by loose lintels (unattached to the structure), special detailing and construction is required. If the expansion joint runs along side the opening, the loose steel lintel shall be allowed to expand independently of the masonry. To accomplish this, form a slip plane with flashing located above and below the angle. A backer rod and sealant shall be installed in front of the toe of the angle, and space shall be left at the end of the angle. Thus, a pocket will be formed which will allow movement of the steel angle within the brickwork. If the joint cannot be built in this manner, then the vertical expansion joint shall not be located alongside the opening, but rather, with Architect's prior approval, the joint shall be located halfway between the openings.

e. Intersections and Junctions:

i. Locate expansion joints at intersections of masonry walls and walls which serve different functions. If the masonry is not required to be bonded at the intersection, an expansion joint shall be incorporated. Walls which intersect at other than right angles are also vulnerable to cracking at the intersection.

ii. Locate expansion joint to separate adjacent walls of different heights to avoid differential movement, especially if the difference is very large.

f. Parapets:

i. All vertical expansion joints shall be carried through the parapets.

ii. Additional expansion joints shall be halfway between those running full height, unless the parapet is reinforced. These additional expansion joints shall continue down to a horizontal expansion joint, or continue to the base of the wall.

g. Horizontal Expansion Joints:
   i. Locate horizontal expansion joints at shelf angles supporting masonry.

h. Control Joints:
   i. Locate CMU control joints directly over concrete slab control joints.
   ii. Whenever possible, lay out CMU so that control joint will coincide with CMU module (25 feet-0 inch maximum spacing between control joints), unless noted otherwise on drawings.
   iii. Locate control joints at structural columns to isolate movement from continuing or intersecting walls and columns.
   iv. Install pre-molded control joints with backer rod and sealant in accordance with manufacturer's instructions.

Q. Block Insulation:
   1. Foamed-In Place Block Insulation: Make sure concrete masonry units to receive foamed in place block insulation are ready for drilling and filling. Drill holes and fill concrete masonry unit cells completely with insulation in accordance with manufacturer's instructions. Plug holes with cement mortar and leave surface smooth in accordance with manufacturer's instructions.

3.04 ALLOWABLE TOLERANCES

A. Maximum Variation from Plumb:
   1. In lines and surfaces of columns, walls and at rises:
      a. 1/4 inch in 10 feet (1:480)
      b. 3/8 inch in 20 feet (maximum)
      c. 1/2 inch in 40 feet (1:960)
   2. For external corners, expansion joints and other conspicuous lines:
      a. 1/4 inch in 20 feet (maximum)
      b. 1/2 inch in 40 feet (1:960)

B. Maximum variation from level:
   1. 1/4 inch in any bay or 20 feet
   2. 1/2 inch in 40 feet (1:960)

3.05 REMOVAL OF FORMS AND SHORES

A. Do not remove shores and forms under reinforced masonry beams, lintels, and soffits until members have hardened sufficiently to carry their own weight and other super imposed loads. Providing that sufficient curing has taken place, leave forms and shores in place as follows:
   1. Beam and lintels: Minimum ten (10) days.

B. Allow 16 hours to elapse after completion of masonry columns and walls before placing floor or roof construction loads on them. Allow an additional 48 hours before applying concentrated loads such as trusses, girders, and beams.

3.06 REPAIRING, POINTING AND CLEANING

A. All holes in exposed masonry shall be pointed, and defective joints shall be cut out and re-pointed with mortar.
   1. Remove misplaced mortar; protect face materials against staining.
   2. Remove and replace masonry units which are loose, chipped, broken, stained or otherwise damaged, or if units do not match adjoining units as intended. Provide new units to match adjoining units and install in fresh mortar or grout, pointed and tooled to eliminate evidence of replacement.
   3. Pointing: During the tooling of joints, enlarge any voids or holes and fill completely with mortar. Point up all joints at corners, openings and adjacent work to provide a neat, uniform appearance, prepared properly for application of caulking or sealant compounds.
   4. Cleaning exposed masonry surfaces:
      a. During the progress of the work, wipe off excess mortar as the work progresses. Dry brush at the end of each day's work.

B. Final Cleaning:
   1. Dry clean to remove large particles of mortar using wood paddles and scrapers.
   2. Provide adequate water supply to thoroughly clean the masonry wall. Volume of water shall be a minimum of 6-8 gallons per minute. A regulated pressure washer as approved by the PROSOCO Rep, Bob Holmes 972-670-7292, with a maximum water pressure not to exceed 1,000 psi, and a fan tip nozzle of 25 or 40 degrees, may be used to increase water flow and volume.
   3. Presoak wall by saturating with water and flush off loose mortar and dirt.
   4. Scrub down wall with a soft bristle brush (wire or metal brushes shall NOT be permitted) and water starting at the bottom and work up the wall. Apply cleaner solution liberally and let stand 3-5 minutes, depending on temperature. (Note: If conditions allow, begin work on shaded walls and work around building to continue cleaning in shaded areas.)
   5. Rinse walls by washing off all dirt and mortar crumbs using clean water (see paragraph 4. above),
   6. Muriatic acid cleaning of masonry is not permitted,
   7. Use the proper PROSCOCO Sure Klean product, or AHI Supply, (281) 331-0088 approved product recommended by the manufacturer of the masonry units.
   8. Clean and restore other work damaged or soiled by work of this Section.

3.07 REPAIR OR REPLACEMENT OF DAMAGED WORK

A. Imperfect or damaged work or any material damaged or determined to be defective before final completion and acceptance of the entire job, shall be satisfactorily replaced at Contractor's expense and in conformity with all requirements of drawings and specifications. Removal and replacement of masonry work shall be performed in such a manner as not to impair the appearance of the façade, or strength of the structure in any way.

3.08 CLEAN-UP AND PROTECTION

A. Clean up all debris caused by work of this Section, keeping the area clean and neat at all times.

B. Cover all unfinished work at night against the elements with plastic sheeting, building paper, heavy canvas or other material approved by Architect to prevent water from entering cavities.

C. Provide final protection and maintain conditions, in a manner acceptable to Installer, that ensure unit masonry is without damage and deterioration at time of Substantial Completion.

END OF SECTION 04 20 00

SECTION 04 21 00 - BRICK MASONRY

PART 1 GENERAL

1.00 SUMMARY

. Section Includes: Brick masonry units.

A. Related Sections:
1. Section 01312 - Project Meetings.
2. Section 07190 - Water Repellents.
3. Section 07900 - Joint Sealers.

1.01 REFERENCES

. American Society for Testing and Materials (ASTM):
1. C 33 - Specification for Concrete Aggregates.
2. C 67 - Test Methods of Sampling and Testing Brick and Structural Clay Tile.
3. C 126 - Specification for Ceramic Glazed Structural Clay Facing Tile, Facing Brick, and Solid Masonry Units.
4. C 216 - Specification for Facing Brick.
5. C 270 - Specification for Mortar for Unit Masonry.
6. C 652 - Specification for Hollow Brick.
7. C 1019 - Method of Sampling and Testing Grout.

A. International Building Code (ICC) adopted addition

B. Building Code Requirements and Specification for Masonry Structures (TMS 402,602/ACI 530,530.1/ASCE 5,6) adopted addition

1.02 SUBMITTALS

. Product Data, and Evaluation Reports as required for installation.

A. Shop Drawings: Include elevations of each wall indicating type and layout of units.

B. Samples: Include samples of stretcher units in sufficient quantity to illustrate color range.

C. Test Reports from an independent testing laboratory showing compliance with applicable specifications.

1.03 QUALITY ASSURANCE

. Continuous Inspection:
1. Employ a qualified masonry inspector for continuous inspection of the masonry work. Acceptance by a State or municipality having a program of examining and certifying masonry inspectors will be considered adequate qualifications. The masonry inspector shall be at the site during all masonry construction and perform the following duties:
a. Review Drawings and Specifications and meet with the CONTRACTOR to discuss requirements before work commences.

b. Before masonry work commences, CONTRACTOR and the Contractor's Quality Control Representative shall attend meeting with ENGINEER to review the requirements for surveillance and quality control of the masonry work.
c. Check brand and type of cement, lime (if used), and source of sand.
d. Ensure that foundation is clean, rough, and ready to receive units.
e. Check reinforcing steel dowels for straightness, proper alignment, spacing, size, and length.
f. Observe field proportioning of mortar. Visually check aggregate to determine uniformity of grading, cleanliness, and moisture.
g. Ensure that joints are full of mortar and kept tight during work. Inspect grout cells to assure that fins will not interfere with grouting. Ensure that masons keep grout cells clean of mortar droppings and inspect to determine compliance.
h. Continuously observe placing of grout.
i. Perform or supervise performance of required sampling and testing.

2. Keep complete record of inspections. Report daily to the Contractor's Quality Control Representative the progress of the masonry inspection.

A. Mock-up:
1. Prior to starting construction of masonry, construct minimum 4 foot square mock-up.
2. Use accepted materials, containing each different kind and color of brick masonry units to illustrate wall design.
3. Show color range, texture range, bond, mortar color, joint tooling, critical design details and quality of workmanship.
4. Masonry construction may not proceed until the Architect./ Engineer approves mock-up.
5. When not accepted, construct another mock-up.
6. When accepted, mock-up will be standard of comparison for remainder of masonry work.
7. Upon completion and acceptance of Project, dispose of mock-ups in legal manner at offsite location.

B. Pre-installation Conference: Conduct as specified in Section 01312.

C. Masonry Prism Testing: Perform masonry prism testing in accordance with ASTM C1314 Standard Test Method for Compressive Strength of Masonry Prisms.

D. Certification: Furnish manufacturer’s certification that clay brick units provided meet or exceed the requirements of this specification.

1.04 DELIVERY, STORAGE, AND HANDLING

. Store masonry units above ground to prevent contamination by mud, dust or other materials likely to cause staining or other defects.

A. Cover and protect masonry units from inclement weather to maintain quality control and physical requirements.

B. Transport and handle brick masonry units as required to prevent discoloration, chipping, and breakage.
C. Locate storage piles, stacks, and bins to protect materials from heavy traffic.

D. Remove chipped, cracked, and otherwise defective units from jobsite upon discovery.

1.05 PROJECT CONDITIONS

. Cold Weather Requirements:
1. In accordance ACI 530.1 1.8.c
2. Provide adequate equipment for heating masonry materials when air temperature is below 40 degrees Fahrenheit.

A. Hot Weather Requirements:
1. In accordance with ACI 530.1 1.8.d
2. When ambient air temperature exceeds 100 degrees Fahrenheit, or when ambient air temperature exceeds 90 degrees Fahrenheit and wind velocity is greater than 8 miles per hour, implement hot weather protection procedures.
3. Wet mortar board before loading and cover mortar to retard drying when not being used.
4. Do not spread mortar beds more than 48 inches ahead of placing masonry units.
5. Place masonry units within one minute of spreading mortar.

B. Wetting of Brick: shall be required at the time of laying if the unit's initial rate of absorption (IRA) exceeds 30 grams per 30 square inches per minute or 1 g/ 645mm$^{2.}$

1.06 SEQUENCING AND SCHEDULING

. Because structural brick fall in the critical path of construction, the General contractor should contact the supplier for availability and scheduling prior to selecting a mason contractor to assure adequate time for manufacturing.

PART 2 PRODUCTS

2.00 HOLLOW LOAD BEARING BRICK MASONRY UNITS

. Manufacturers: One of the following or equal:
1. Interstate Brick Co.
2. H. C. Muddox Co.

A. Type: ASTM C 652, Grade SW, Type HBS with minimum compressive strength of 8000 psi.

B. Surface Texture: Matte unless otherwise noted on drawings: (To be selected by Architect/ENGINEER from manufacturer's full range of available textures.)

C. Colors:
1. Color as selected by Architect/ENGINEER from standard colors.

D. Size: Nominal 8 inches wide x 4 inches high x 16 inches long, unless otherwise **indicated on the Drawings**.

E. Special Sizes and Shapes: As required for window and door soldier coursing and custom sills where indicated, corners, bond beams, piers, lintels, control joints, and other special applications to minimize cutting.

PART 3 EXECUTION

3.00 PREPARATION

. Protect adjacent construction with appropriate means from mortar droppings and other effects of laying of brick masonry units.

A. Thoroughly clean foundations of laitance, grease, oil, mud, dirt, mortar droppings, and other objectionable matter.

3.01 BRICK MASONRY UNITS

. Provide Custom Level of Quality in accordance with ASTM C652 and C216.

A. Lay units in uniform and true courses, level, plumb, and without projections or offset of adjacent units.

B. Lay units to preserve unobstructed vertical continuity of cells to be filled with grout or insulation.

C. Protect cells intended to remain free of grout using grout stops, mortar dams, or by other means.

D. Align vertical cells to be filled with grout to maintain clear, unobstructed continuous vertical cell measuring not less than 2 by 3 inches.

E. Butter vertical head joints for thickness equal to face shell thickness of units, and shove joints tightly together so that mortar bonds to both masonry units.

F. Solidly fill joints from face of units to inside face of cells.

G. Lay units to desired height with joints of uniform thickness.

H. Bond shall be plumb throughout.

I. Lay units to avoid formation of cracks when units are placed. Keep cells of units as free of mortar as possible as masonry wall height increases.

J. Lay masonry plumb, true to line, with courses level. Keep bond pattern plumb throughout. Lay masonry within the tolerances of TMS 602 Section 3.3 F.

K. When positions of units shift after mortar has stiffened, bond is broken, or cracks are formed, relay units in new mortar.

L. Remove mortar, mortar droppings, debris, and other obstructions and materials from inside of cell walls.

M. Seal cleanouts after inspection and before grouting or placing insulation.

3.02 LOOSE FILL INSULATION

. Lay brick masonry units protecting cells to receive grout from filling into those not intended to be grouted.

A. Pour insulation into cells not intended to be grouted.

B. Ensure that no insulation gets into cells which are to be filled with grout.

C. Do not lay units more than 4 feet vertically ahead of units filled with loose insulation.

3.03 MORTAR JOINTS

. Make joints straight, clean, smooth, and uniform in thickness.

A. Pointing: Tool exposed joints, slightly concave. Strike concealed joints flush.

B. Joint Thickness: Make vertical and horizontal joints as required to achieve nominal dimensions on drawings and within tolerances listed in TMS 602 Section 3.3 F.

C. Where fresh masonry joins totally or partially set masonry, clean and roughen set masonry before laying new units.

3.04 BOND PATTERN

. Lay brick masonry units in running bond pattern, unless otherwise **indicated on the Drawings**.

3.05 GROUTING AND REINFORCEMENT

. Provide splices in vertical and horizontal reinforcing as outlined in TMS 402 Sections 1.16.3.3, 2.1.7.7 and 3.3.3.4. Hold vertical reinforcing bars in position at top and bottom and at intervals not exceeding 200 bar diameters. Use steel wire bar positioners to position bars and tie reinforcing bars to dowels with wire ties.

A. Obtain acceptance of reinforcement placement before grouting.

B. Fill all spaces and cells containing reinforcing or intended to be grouted solidly with grout.

C. Low-lift Grouting:

1. Grout pours of 12 in. or less
   a. Consolidate grout pours of 12 in. or less in height by mechanical vibration or puddling
2. Grout pours of 12 in. to 5 ft. 4 in.
   a. Construct the masonry wall up to 5 ft. 4 in.

b. For partially grouted walls, use expanded metal mesh or other grout stop materials that would not interfere with the bond to confine grout to the cells to be grouted.
c. Grout the wall 1 ½ in. below of the top of the constructed section of the wall
d. Consolidate the grout using mechanical vibration and reconsolidate after initial water loss and settlement.

D. High-lift Grouting:
1. If grouting is accomplished by the high-lift method the masonry shall be allowed to cure for at least 4 hours before grouting.
2. In double wythe construction, vertical grout barriers shall be built across the grout space to the height of the grout lift.
3. Grout barriers shall not be spaced more than 30 feet apart. Grout shall be placed in lifts not to exceed 12 ft. 8 in. If bond beams occur within the grout pour, limit the grout lift to the bottom of the lowest bond beam that is more than 5 ft. 4 in. above the bottom of the lift.
4. Each lift shall be allowed to set for 10 minutes after initial consolidation of grout before successive lift is placed.
5. The full height of each section of wall shall be grouted in one day.

E. Grout in cells shall have full contact with surface of concrete footings.

F. When grouting stops for one hour or longer, form horizontal construction joints by stopping grout placement 1 ½ inches below top of uppermost unit containing grout.

G. After placement, consolidate grout using mechanical immersion vibrators designed for consolidating grout.

H. Placement:
1. Use a hand bucket, concrete hopper, or grout pump.
2. Place grout in final position within 1 ½ hours after mixing.
3. Place grout so as to completely fill the grout spaces without segregation of the aggregates.
4. Do not insert vibrators into lower grout placements that are in a semi-solidified state.

3.06 BOND BEAMS

. Place horizontal reinforcement and solidly grout bond beam units in place.

A. Provide wire mesh at openings in bottom of bond beams to support grout where walls are not grouted solid.

3.07 CUTTING BRICK MASONRY UNITS

When possible, use full units of the proper size in lieu of cut units. Cut units as required to form chases, openings, for anchorage, and for other appurtenances.
. Cut and fit units with power-driven carborundum or diamond disc blade saw.

3.08 CONTROL JOINTS / EXPANSION JOINTS

. Provide in masonry walls where **indicated on the Drawings**.

A. Make full height and continuous in appearance.

B. Run bond beams and bond beam reinforcing bars continuously through control joints. Stop horizontal reinforcing at expansion joints

C. Insert control joint filler in joints as wall is constructed.

D. Insert 50% compressible neoprene expansion joint material in expansion joints.

E. Apply sealant as specified in Section 07900.

3.09 OPENINGS AND LINTELS

. Place horizontal reinforcement in fully grouted bond beam units.

A. Use lintel units where underside of lintel will be exposed.

B. Provide minimum of 8 inch bearing at each end of lintel.

C. Embed reinforcing bars minimum 24 inches or 40 bar diameters, whichever is longer, into wall past edges of openings or as **indicated on the Drawings**.
1. At corners, provide 90 degree bend with equivalent total embedment.

3.10 STEEL DOOR FRAMES

. Anchor and fully grout jambs and head of steel door frames connected to brick unit masonry.

A. Fill frames with grout as each 2 feet of brick unit masonry is laid.

3.11 BEARING PLATES

. Provide minimum of 12 inches of grouted brick unit masonry below steel bearing plates and beams bearing on masonry walls.

3.12 ANCHOR BOLTS

. Hold anchor bolts in place with template during grouting to assure precise alignment.

A. Do not cut or ream members being anchored or use other means to accommodate misaligned anchor bolts in roof deck support angles.

B. Provide minimum 6 inch wide grouted brick unit masonry entirely around anchor bolts and other attachment devices.

3.13 ENCLOSURES

. Where brick masonry units enclose conduit, pipes, stacks, ducts, and similar items, construct chases, cavities, and similar spaces as required, whether or not such spaces are **indicated on the Drawings**.

A. Point openings around flush mounted electrical outlet boxes with mortar, including flush joints above boxes.

B. Do not cover enclosures until inspected and when appropriate, tested.

3.14 OTHER EMBEDDED ITEMS

. Build in wall plugs, accessories, flashings, pipe sleeves, and other items required to be built-in as the masonry work progresses.

3.15 PATCHING

. Patch exposed brick masonry units at completion of the Work and in such manner that patching will be indistinguishable from similar surroundings and adjoining construction.

3.16 MISCELLANEOUS

. Build in required items, such as anchors, flashings, sleeves, frames, structural steel, lintels, anchor bolts, and metal fabrications, as required for complete installation.

3.17 WATER REPELLENT

. Apply water repellent as specified in Section 07190.

3.18 FIELD QUALITY CONTROL

. Have minimum 3 masonry units of each type proposed for Project tested in accordance with ASTM C 67 to verify conformance to Specifications.

A. Tests shall include compressive strength, absorption, Initial Rate of absorption and unit weight.

B. Perform compressive strengths on structural units by cutting the units in half lengthwise and into rectangular unit without any flanges and cap according to ASTM C67 prior to testing.

C. Employ and pay acceptable independent testing laboratory to perform testing.

3.19 CLEANING

. Exercise extreme care to prevent mortar splotches.

A. Do not attach construction supports to masonry walls.

B. Wash off brick scum and grout spills before scum and grout set.

C. Remove grout stains from walls.

D. Clean exposed masonry. Remove scaffolding and equipment. Dispose of debris, refuse, and surplus material offsite legally.

E. Correct efflorescence on exposed surfaces with commercially prepared cleaning solution acceptable to masonry unit manufacturer.
   1. Apply cleaning solution in accordance with cleaning solution manufacturer's printed instructions.
   2. Do not use muriatic acid as cleaning solution.
   3. Do not use sandblast cleaning equipment.

3.20 FORMS AND SHORES

. Where required, construct forms to the shapes **indicated on the Drawings**.
   1. Construct forms sufficiently rigid to prevent deflection which may result in cracking or other damage to supported masonry and sufficiently tight to prevent leakage of mortar and grout.
   2. Do not remove supporting forms or shores until the supported masonry has acquired sufficient strength to support safely its weight and any construction loads to which it may be subjected.
      a. Wait at least 16 hours after grouting masonry columns or walls before applying uniform loads.
      b. Wait at least 64 hours before applying concentrated loads.

3.21 PROTECTION

. Provide temporary protection for exposed masonry corners subject to damage.

A. Bracing:
   1. Adequately brace masonry walls over 8 feet in height to prevent overturning and to prevent collapse unless wall is adequately supported by permanent supporting elements so wall will not overturn or collapse.
   2. Keep bracing in place until permanent supporting elements of structure are in place.

B. Limited Access Zone:
   1. Establish limited access zone prior to start of masonry wall construction.
   2. Zone shall be immediately adjacent to wall and equal to height of wall to be constructed plus 4 feet by entire length of wall on unscaffolded side of wall.
   3. Limit access to zone to workers actively engaged in constructing wall. Do not permit other persons to enter zone.
   4. Keep zone in place until wall is adequately supported or braced by permanent supporting elements to prevent overturning and collapse.

3.22 GROUTING EQUIPMENT

. Grout Pumps:
   1. Do not pump grout through aluminum tubes.
   2. Operate pumps to produce a continuous stream of grout without air pockets.
   3. Upon completion of each days pumping, eject grout from pipeline without contamination or segregation of the grout.
      a. Remove waste materials and debris from the equipment.
      b. Dispose of waste materials, debris, and all flushing water outside the masonry.

A. Vibrators:
   1. Internal vibrators shall maintain a speed of not less than 5,000 impulses per minute when submerged in the grout.
   2. Maintain at least one spare vibrator, at the site at all times.
   3. Apply vibrators at uniformly spaced points not further apart than the visible effectiveness of the machine.
   4. Limit duration of vibration to time necessary to produce satisfactory consolidation without causing segregation.

END OF SECTION 04 21 00

SECTION 04 72 00 - CAST STONE MASONRY

PART 1 - GENERAL

1.01 SECTION INCLUDES

A. Provide cast stone panels, moldings, and ornamental work, mortar, grout, reinforcement, anchorages, and accessories shown, specified, or required to complete Work

1. Manufacturer shall furnish Cast Stone covered by this specification.
2. Installing contractor shall unload, store, furnish all anchors, set, patch, clean and seal the cast stone as required.

B. Contractor performing Work of this Section shall be responsible for performing unit masonry work specified in Section 04 20 00, Unit Masonry.

1.02 RELATED SECTIONS

A. Section 04 20 00, Unit Masonry

B. Section 07 90 00, Joint Sealers.

1.03 REFERENCE STANDARDS

A. American Concrete Institute (ACI)
1. 318, Building Code Requirements for Reinforced Concrete.

B. ASTM International (ASTM)

1. A82, Standard Specification for Steel Wire, Plain, for Concrete Reinforcement.
2. A615/A 615M, Standard Specification for Deformed and Plain Billet-Steel Bars for Reinforced Concrete.
3. C33, Standard Specification for Concrete Aggregates.
4. C150, Standard Specification for Portland Cement.
5. C173, Standard Test Method for Air Content of Freshly Mixed Concrete by the Volume Method.
6. C231, Standard Test Method for Air Content of Freshly Mixed Concrete by the Pressure Method.
7. C260, Standard Specification for Air-Entrained Admixtures for Concrete.
8. C270, Standard Specification for Mortar for Unit Masonry.
9. C494, Standard Specification for Chemical Admixtures for Concrete.
10. C618, Specification for Coal Fly Ash and Raw or Calcined Natural Pozzolan for Use as a Mineral Admixture in Concrete.
11. C979, Standard Specification for Coloring Pigments for Integrally Pigmented Concrete.
12. C989, Standard Specification for Ground Granulated Blast-Furnace Slag for Use in Concrete.
13. C1194, Standard Test Method for Compressive Strength of Architectural Cast Stone.
14. C1195, Standard Test Method for Absorption of Architectural Cast Stone.
15. C1364, Standard Specification for Architectural Cast Stone.
16. D2244, Standard Test Method for Calculation of Color Differences from Instrumentally

Measured Color Coordinates.

C. Cast Stone Institute

1. Technical Manual (Current Edition)

1.04 DEFINITIONS

A. Cast Stone: A refined architectural concrete building unit manufactured to simulate natural cut stone, used in unit masonry applications.

1. Dry Cast Concrete Products: Manufactured from zero slump concrete.
   a. Vibrant Dry Tamp (VDT) Casting Method: Vibratory ramming of earth moist, zero-slump concrete against a rigid mold until it is densely compacted.
2. Wet Cast Concrete Products: Manufactured from measurable slump concrete.
   a. Wet Casting Method: Manufactured from measurable slump concrete and vibrated into a mold until it becomes densely consolidated.

1.05 SUBMITTALS

A. Samples: Submit minimum 6 inch long pieces of the cast stone that are representative of the general range of finish and color proposed to be furnished for the project.

B. Test Results: Submit manufacturers test results of cast stone previously made by the manufacturer.

C. Shop Drawings: Submit manufacturers shop drawings including profiles, cross-sections, reinforcement, exposed faces, arrangement of joints, anchoring methods, anchors (if required), annotation of stone types and their location.

D. Engineering Calculations: Calculations shall bear the seal of a Registered Professional Engineer, licensed in the State of Texas.

E. Certification: Manufacturers affidavit that materials used in Project contains no asbestos.

1.06 QUALITY ASSURANCE

A. Manufacturer Qualifications:

1. Manufacturer shall have sufficient plant facilities to produce the shapes, quantities and size of Cast Stone required in accordance with the project schedule.
2. Manufacturer shall submit a written list of projects similar in scope and at least three (3) years of age, along with owner, architect and contractor references.

B. Single Source Responsibility:

1. Cast Stone Units: Obtain cast stone units of uniform texture and color, or a uniform blend within the accepted ranges for those characteristics, from one (1) manufacturer for each different product required for each continuous surface or visually related surfaces.
2. For Mortar and Grout Materials: Brands of cementitious materials and admixtures, and the source of supply of sand and aggregates shall remain the same throughout the Work

where exposed to view and where not scheduled to receive a subsequently applied finish, i.e. painting, etc., unless directed otherwise in writing by the Architect.

3. Contractor's Responsibility: Contractor performing Work of this Section shall be responsible for performing unit masonry work specified in Section 04 20 00 Unit Masonry.

C. Standards: Comply with the requirements of the Cast Stone Institute Technical Manual and the project specifications. Where a conflict may occur, the contract documents shall prevail.

D. Supplementary Design Details and Engineering: The general design is presumed adequate to permit compliance with the specified performance, except the contractor is responsible to determine, furnish and install all additional blocking and bracing not shown on the drawings but required to resist wind loads and other building code requirements. Provide engineering calculations to supplement the general design bearing the seal of a Registered Professional Engineer, licensed in the State of Texas.

E. Mock-Up: Provide full size unit(s) for use in construction of sample wall. The accepted mock-up shall become the standard for appearance and workmanship for the project. The accepted mock-up may be incorporated into the finished work. Provide one half of a unit with masonry sealer as outlined in Part 2.3 of this section. The other half of the stone unit shall remain unsealed.

1.07 PRE-INSTALLATION CONFERENCE

A. Refer to Section 01 31 19 Project Meetings.

1.08 DELIVERY AND STORAGE

A. Mark production units with the identification marks as shown on the shop drawings.

B. Package units and protect them from staining or damage during shipping and storage.

C. Stack cast stones on non-staining wood skids clear of the ground. Protect with non-staining plastic membrane or waterproof paper.

1.09 PROJECT CONDITIONS AND WARRANTY

A. Refer to Section 04 20 00, Unit Masonry.

PART 2 - PRODUCTS

2.01 ACCEPTABLE MANUFACTURERS

A. Manufacturers listed below or named within the specification whose product meets or exceeds the specifications are approved for use on the Project. Other manufacturers must have a minimum of five (5) years experience manufacturing products meeting or exceeding the specifications and comply with Division 1 regarding substitutions in order to be considered.

1. Advanced Cast Stone Inc., Fort Worth, TX; (800) 687-4352
2. AHI, Alvin, TX; (800) 873-5794, Ext. 12
3. Dallas Cast Stone Co., Inc., Dallas, TX; (214) 428-6269

4. Precision Development, Inc., Houston, TX; (713) 667-1310
5. Stone Castle Industries, Houston, TX; (713) 440-6224
6. Any member in good standing of the Cast Stone Institute (770) 972-3011

2.02 ARCHITECTURAL CAST STONE

A. Physical properties: Provide the following:

1. Compressive Strength: ASTM C1194: 6,500 psi minimum for products at 28 days.
2. Absorption: ASTM C1195: 6 percent maximum by the cold water method or 10 percent maximum by the boiling method for products at 28 days.
3. Air Content: ASTM C173 or C231, for wet cast product shall be 4-8 percent for units exposed to freeze-thaw environments. Air entrainment is not required for VDT products.

B. Job site testing: One (1) sample from production units may be selected at random from the field for each 500 cubic feet delivered to the job site.

1. Three (3) field cut cube specimens from each of these samples shall have an average minimum compressive strength of not less than 85 percent with no single specimen testing less than 75 percent of design strength as allowed by ACI 318.
2. Three (3) field cut cube specimens from each of these samples shall have an average maximum cold-water absorption of 6 percent.
3. Field specimens shall be tested in accordance with ASTM C1194 and C1195.

C. Provide sizes and shapes as indicated on the drawings.

2.03 RAW MATERIALS

A. Portland cement: Type I or Type III, white, ASTM C150.

B. Coarse aggregates: Granite, quartz or limestone, ASTM C33, except for gradation, and are optional for the VDT casting method.

C. Fine aggregates: Manufactured or natural sands, ASTM C33, except for gradation.

D. Colors: Inorganic iron oxide pigments, ASTM C979 except that carbon black pigments shall not be used.

E. Admixtures, comply with the following:

1. ASTM C260 for air-entraining admixtures.
2. ASTM C494 for water reducing, retarding or accelerating admixtures.
3. ASTM C618 mineral admixtures of dark and variable colors shall not be used in surfaces intended to be exposed to view.
4. ASTM C989 granulated blast furnace slag may be used to improve physical properties. Tests are required to verify these features.

F. Water: Clean, potable

G. Reinforcing Bars:

1. ASTM A615/A 615M, Galvanized or epoxy coated when cover is less than 1-1/2 inches
2. Welded Wire Fabric: ASTM A82 where applicable for wet cast units.

H. All anchors, dowels and other anchoring devices and shims shall be standard building stone anchors commercially available in a non-corrosive material such as zinc plated, galvanized steel, brass, or stainless steel Type 302 or 304 as specified in Section 04200 Unit Masonry.

I. Cleaner: Sure Clean No. 600 manufactured by ProSoCo Products, Inc.; or other approved by manufacturer to suit application.

J. Masonry Sealer: Breather type (non-filming forming) sealer. Advance Chemical Technology's Sil-Act 22 or General Electric Silicon PWR 255; or other approved by manufacturer to suit application.

K. Joint Mortar: Type N, ASTM C270.

L. Other Materials: Provide all other materials, not specifically described, but required for a complete and proper installation.

2.04 COLOR AND FINISH

A. Match sample on file in Architect's office.

B. All surfaces intended to be exposed to view shall have a fine-grained texture similar to natural stone, with no air voids in excess of 1/32 inch and the density of such voids shall be less than three (3) occurrences per any 1 square inch and not obvious under direct daylight illumination at a 5-foot distance.

C. Units shall exhibit a texture approximately equal to the approved sample when viewed under direct daylight illumination at a 10-foot distance.

1. ASTM D 2244 permissible variation in color between units of comparable age subjected to similar weathering exposure.
   a. Total color difference: not greater than six (6) units.
   b. Total hue difference: not greater than two (2) units.

D. Minor chips shall not be obvious under direct daylight illumination from a 20-foot distance.

E. Remove cement film, if required, from exposed surfaces prior to packaging for shipment.

2.05 MATERIAL REINFORCING

A. Manufacturer shall reinforce the units as required for safe handling and structural stress.

B. Minimum reinforcing shall be 0.25 percent of the cross section area.

C. Panels, soffits and similar stones greater than 24 inches in one direction shall be reinforced in that direction. Units less than 24 inches in both their length and width dimension shall be non-reinforced unless otherwise specified.

D. Welded wire fabric reinforcing shall not be used in dry cast products.

2.06 MISCELLANEOUS STEEL SUB-FRAMING AND SUPPORTS

A. Provide miscellaneous steel sub-framing for cast stone pieces. The drawings indicate cast stone profiles which are to be maintained, and may indicate sub-framing, however, the quantity, location, and sizes of steel sub-framing may vary depending on the maximum size of cast stone unit that the cast stone supplier is capable of providing or that the mason is capable of installing. The quantity, location, and sizes of sub-framing required can only be ascertained by close coordination between the cast stone suppler, the brick mason, and the supplier of miscellaneous metals. Failure to determine, and include in the proposal, the steel required for support of the cast stone shall not be considered for additional compensation, and costs related thereto shall be the responsibility of the contractor.

2.07 MATERIAL CURING

A. Cure units in a warm curing chamber approximately 100 degrees F at 100 percent relative humidity for approximately 12 hours, or cure in a 100 percent moist environment at a minimum 70 degrees F for 16 hours after casting. Additional yard curing at 95 percent relative humidity shall be 350 degree-days (i.e. 7 days at 50 degrees F or 5 days at 70 degrees F) prior to shipping. Form cured units shall be protected from moisture evaporation with curing blankets or curing compounds after casting.

B. Acid etch exposed surfaces, if necessary, to remove cement film prior to packaging and shipment.

2.08 MANUFACTURING TOLERANCES

A. Cross section dimensions shall not deviate by more than ±1/8 inch from approved dimensions.

B. Length of units shall not deviate by more than length/ 360 or ±1/8 inch, whichever is greater, not to exceed ±1/4 inch.

1. Maximum length of any unit shall not exceed 15 times the average thickness of such unit unless otherwise agreed by the manufacturer.

C. Warp, bow or twist of units shall not exceed length/ 360 or ±1/8 inch, whichever is greater.

D. Location of dowel holes, anchor slots, flashing grooves, false joints and similar features: On formed sides of unit, 1/8 inch, on unformed sides of unit, 3/8 inch maximum deviation.

2.09 PRODUCTION QUALITY CONTROL

A. Testing

1. Test compressive strength and absorption from specimens selected at random from plant production.
2. Samples shall be taken and tested from every 500 cubic feet of product produced.
3. Perform tests in accordance ASTM C1194 and C1195.
4. New and existing mix designs shall be tested for strength and absorption compliance prior to producing units.

PART 3 - EXECUTION

3.01 EXAMINATION

A. Installing contractor shall check Cast Stone materials for fit and finish prior to installation. Do not set unacceptable units.

3.02 SETTING TOLERANCES

A. Comply with Cast Stone Institute Technical Manual.

B. Set stones 1/8 inch or less, within the plane of adjacent units.

C. Joints, plus - 1/16 inch, minus - 1/8 inch

3.03 MORTAR MIXING

A. Thoroughly mix mortar ingredients in quantities needed in accordance with Section 04200 Unit Masonry.

B. Do not use anti-freeze compounds to lower the freezing point of mortar.

3.04 JOINTING

A. Joint size:

1. At stone / brick joints 3/8 inch
2. At stone / stone joints in vertical position 1/4 inch
3. Stone / stone joints exposed on top 3/8 inch

B. Joint materials:

1. Use a full bed of mortar at all bed joints.
2. Flush vertical joints full with mortar.
3. Leave joints with exposed tops or under relieving angles open for sealant.
4. Leave head joints in copings and projecting components open for sealant.

C. Location of joints:

1. As shown on drawings and confirmed on shop drawings.
2. At control and expansion joints unless otherwise shown.

3.05 SETTING

A. Drench units with clean water prior to setting.

B. Fill dowel holes and anchor slots completely with mortar or non-shrink grout.

C. Set units in full bed of mortar, unless otherwise detailed.

D. Rake mortar joints 3/4 inch for pointing.

E. Remove excess mortar from unit faces immediately after setting.

F. Tuck point unit joints to a slight concave profile.

3.06 JOINT SEALANT

A. Comply with requirements of Section 07 90 00 Joint Sealers.

B. Prime ends of units, insert properly sized backing rod and install required sealant.

3.07 REPAIR AND CLEANING

A. Repair chips with touchup materials furnished by manufacturer.

B. Saturate units to be cleaned prior to applying an approved masonry cleaner. Consult with manufacturer for appropriate cleaners.

C. Masonry Surfaces Clean and Untreated: Examine newly laid masonry closely to ensure that its finished surface contains no releasing agents (form oil). If it does contain form oil, etch surface with muriatic acid, rinse thoroughly and/or score with a wire brush.

D. Masonry Surfaces: Remove paint, coatings, sealers and dirt by sandblasting; rinse with clear water.

3.08 INSPECTION AND ACCEPTANCE

A. Inspect finished installation according to Cast Stone Institute Technical Bulletin #36.

B. Do not field apply water repellant until repair, cleaning, inspection and acceptance is completed.

3.09 SEALER

A. Apply breather type (non-film forming) masonry sealer to completed surfaces in accordance with manufacturer's instructions. Sealer required on all exposed surfaces.

END OF SECTION 04 72 00

SECTION 05 40 00 - COLD-FORMED METAL FRAMING

PART 1 – GENERAL

1.01 SECTION INCLUDES

A. Labor, services, materials, supplies, equipment, tools, transportation, and facilities required in connection with or incidental to metal roof decking, as described in this Section, shown on Drawings, or reasonably implied therefrom, including, but not limited to:

1. Light gauge steel framing designed to receive structural loads
2. C-shaped load-bearing steel studs

1.02 QUALITY ASSURANCE

A. Coordinate the requirements on the Structural Drawings with the requirements of this Section. If a conflict exists, notations on the Structural Drawings take precedence.

B. The following document governs the Work, except where more restrictive items are specified:

1. AISI Design of Cold-Formed Steel Structural Members

C. Welding Qualifications: Qualify welding processes and welding operators in accordance with AWS "Standard Qualification Procedure".

D. Studs, tracks, channels, and other light gauge framing members shall conform to requirements of ASTM C955.

E. Fire-Rated Assemblies: Where framing units are components of assemblies indicated for a fire-resistance rating, including those required for compliance with governing regulations, provide units that have been approved by governing authorities that have jurisdiction.

1.03 REFERENCES

A. American Iron and Steel Institute (AISI)

1. Specification for the Design of Cold-Formed Steel Structural Members

B. ASTM International (ASTM)

1. ASTM A1003/A1003M-05 Standard Specification for Steel Sheet, Carbon, Metallic- and Nonmetallic-Coated for Cold-Formed Framing Members.
2. A653, Steel Sheet, Zinc-Coated (Galvanized) or Zinc-Iron Alloy-Coated (Galvannealed) by the Hot-Dip Process
3. A780, Standard Practice for Repair of Damaged and Uncoated Areas of Hot-Dip Galvanized Coatings
4. A924, General Requirements for Steel Sheet, Metallic-Coated by the Hot-Dip Process
5. ASTM C954-04 Standard Specification for Steel Drill Screws for the Application of Gypsum Panel Products or Metal Plaster Bases to Steel Studs from 0.033 in. to 0.112 in. in thickness.

6. C955, Load-Bearing (Traverse and Axial) Steel Studs, Runners (Track) and Bracing or Bridging for Screw Application of Panel Products and Metal Plaster Bases
7. ASTM C1007-04 Standard Specification for Installation of Load Bearing (Transverse and Axial) Steel Studs and Related Accessories.

C. Metal Lath / Steel Framing Association (ML/SFA)

1. Steel Framing Manual

1.04 SUBMITTALS

A. Product Data:

1. Manufacturer's specifications and other data needed to prove compliance with specified requirements.
2. Manufacturer's installation instructions.

B. Shop Drawings: Provide shop drawings prepared by cold-formed metal framing manufacturer. Indicate size, material, and finish. Show locations and installation procedures along with wind load criteria (see structural drawings). Include details of joints, attachments, and clearances.

C. Supplementary Design Details: The general design is presumed adequate to permit compliance with the specified performance. Provide engineering calculations to supplement the general design. Calculations shall bear the seal of a Registered Professional Engineer, licensed in the State of Texas.

1.05 PRODUCT DELIVERY AND STORAGE

A. Protect and store metal framing and related accessories from rusting and damage in accordance to AISI's "Code of Standard Practice". Deliver to the project site in manufacturer's unopened containers or bundles, fully identified with name, brand, type and grade. Store off the ground in a dry ventilated space or protect with suitable waterproof coverings.

1.06 PRE-INSTALLATION CONFERENCE

A. Section 01 31 00, Project Management and Coordination.

PART 2 – PRODUCTS

2.01 APPROVED MANUFACTURERS

A. Manufacturers listed whose products meet or exceed the specifications may be used on the Project. Other manufacturers must have a minimum of five (5) years experience manufacturing products meeting or exceeding the specifications and comply with Division 1 requirements regarding substitutions in order to be considered.

1. Allied Studco, Inc.
2. CLARKWESTERN Building Systems
3. Dietrich Industries, Inc.
4. Fire Trak Corp.
5. Marino Ware Industries

6. The STEEL Network, Inc.
7. Unimast Incorporated
8. Delta Metal Products
9. Wheeling Corrugating Co.
10. Nucor Building Components

2.02 MATERIAL

A. Basic System Components: With each type of metal framing required, provide manufacturer's standard steel top track, runner track (tracks), blocking, lintels, clip angles, shoes, reinforcements, fasteners, and accessories as recommended by manufacturer for the applications indicated, as needed to provide a complete metal framing system.

B. Steel Stud System:

1. Stud Type: C-shaped galvanized steel studs, with punched web and minimum 1- 5/8 inch flanges with flange return lip.
2. Gauge:
   a. 12, 14, and 16 gauge formed from steel conforming to ASTM A1003 & A653, SQ, Grade 50, with 50,000 PSI minimum yield.
   b. 18 gauge formed from steel conforming to ASTM A1003 & A653, SQ, Grade 33, with 33,000 PSI minimum yield.
3. Sizes: As indicated or required.
4. Track, Bridging, Bracing and Misc. Items: Galvanized steel
   a. 18 gauge formed from steel conforming to ASTM A1003 & A653, SQ, Grade 33, with 33,000 PSI minimum yield, same flanges as studs, except provide Deflection Track (DT) with two (2) inch flange minimum for top of stud walls at floor or roof above, typically. Provide manufacturers standard head and by-pass clips for vertical delfection.
5. “Z” Clips: 22 gauge galvanized steel; six (6) inches long.
6. Slotted Deflection Track: Manufacturer’s single, deep-leg, U-shaped steel track: Punched with vertical slots in both legs. Steel Sheet top runner manufactured to prevent cracking of finishes applied to interior partition framing resulting from deflection of structure above; in thickness not less than indicated for studs and in width to accommodate depth of studs.
7. Headers and Jambs: Manufacturer’s proprietary shape used to form header beams and jambs, columns or posts, of web depths indicated, unpunched, with stiffened
8. Channel Bridging or Bracing: U-Channel Assembly; base metal thickness of .0538 inch and minimum 1/2 inch wide flanges.

C. Anchorage and Fastenings:

1. Self-Drilling Self-Tapping Screws, Bolts, Nuts and Washers: Of type and size recommended by manufacturer to suit application, with hot-dip galvanized finish.
2. Anchorage Devices: Power driven or powder actuated, drilled expansion bolts; or screws with sleeves.
3. Welding: AWS D1.1

D. Finish:

1. Galvanizing: Provide minimum G60 galvanized coating in accordance with ASTM

A1003 & A653.

2. Galvanizing Repair Paint: ZRC cold galvanizing compound or Galvalite manufactured by ZRC Worldwide, Marshfield, MA; Galvax Zinc-rich Cold Galvanizing Coating manufactured by Alvin Products, Inc., Lawerence, MA; or paint complying with military specification MILP-21035A, Type I or II. Apply repair paint in accordance with ASTM A780.

2.03 MINIMUM DESIGN

A. Provide adequate support for the following conditions, where not detailed or noted otherwise.

1. Wind Load: As required by code officials having jurisdiction.
2. Deflection: 1/600 for clear simple spans
3. Deflection: 1/300 for cantilever conditions and roof parapets
4. Gauge: 18 gauge minimum, unless noted otherwise.

PART 3 – EXECUTION

3.01 INSPECTION AND PREPARATION

A. Prior to the start of installation of metal framing systems, meet at the Project site with the installers of other work including door and window frames and mechanical and electrical work. Review areas of potential interference and conflicts, and coordinate layout and support provisions for interfacing work.

3.02 FABRICATION

A. General: Framing components may be prefabricated into panels prior to erection. Fabricate panels plumb, square, true to line and braced against racking with joints welded. Perform lifting of prefabricated panels in a manner to prevent damage or distortion in any members in the assembly.

B. Fastenings: Attach similar components by welding. Attach dissimilar components by welding, bolting, or screw fasteners, as standard with the manufacturer. Wire tying of framing components is not permitted.

3.03 ERECTION

A. General:

1. Track Anchors: Install anchors maximum 4 feet-0 inches on center; design anchors and spacing to carry live, dead and wind loads.
2. Track Splices: Provide channel inserts or weld track splices.
3. Erection: Install members plumb, level, and in a true plane.
4. Fastenings: Make assembly rigid and secure, with welds free of voids and burnouts.

B. Install metal framing systems in accordance with stud manufacturer's printed instructions.

C. Runner Tracks:

1. Install continuous tracks sized to match studs.

2. Align tracks accurately to layout at base and tops of studs.
3. Secure tracks as recommended by stud manufacturer, except do not exceed 24 inches on center for nail or power-driven fasteners, nor 16 inches on center for other types of attachment.
4. Provide fasteners at corners and ends of tracks.
5. Tracks shall be anchored to structural steel prior to installing sprayed on insulation.
6. Provide Deflection Track (DT), at top of stud walls at floor or roof above, typically. Allow for 1/2 inch movement of primary structure. Do not attach studs directly to Deflection Track.
7. Vertical Deflection Clips: Provide manufacturer's standard bypass and head clips, capable of accommodating upward and downward vertical displacement of primary structure

D. Secure studs to top track and bottom runner track by means of approved self-drilling screws or welding at both inside and outside flanges of 14 gauge or heavier material. Screws and welds shall be of sufficient size to insure strength of connection. All welding shall comply with American Welding Society "Specification for Welding Sheet Steel in Structures."

E. Set studs plumb, except as needed for diagonal bracing or required for non-plumb walls or warped surfaces and similar requirements.

F. Where stud system abuts structural columns or walls, including masonry walls, anchor ends of stiffeners to supporting structure. Use Zee clips as specified above. Weld "Z" shaped clips to structural members as shown on drawings. Maximum 2 feet on center vertical.

G. Install supplementary framing, blocking and bracing in the metal framing system wherever walls or partitions are indicated to support fixtures, equipment, services, casework, heavy trim and furnishings, and similar work requiring attachment to the wall or partition. Where type of supplementary support is not otherwise indicated, comply with the stud manufacturer's recommendations and industry standards in each case, considering the weight or loading resulting from the item supported.

H. Frame wall openings with extra studs, equal to the number of studs interrupted by wall openings, placed at each side of wall openings. Install runner tracks and jack studs above and below wall openings. Anchor tracks to jamb studs with shoes or by welding, and space jack studs same as full-height studs of the wall. Secure stud system all around to wall opening frame in the manner indicated.

I. Install bracing / bridging in accordance with manufacturer's instructions and design conditions.

J. Touch up field welds and damaged galvanized coating, except touch up of field cut studs is not required.

K. Frame both sides of expansion and control joints with separate studs; do not bridge the joint with components of stud system.

L. Install horizontal stiffeners in stud system, space (vertical distance) at no more than 54 inches on center. Weld at each intersection.

END OF SECTION 05 40 00

SECTION 05 50 00 - METAL FABRICATIONS

PART 1 – GENERAL

1.01 SUMMARY

A. Provide miscellaneous metal items fabricated from heavy gage ferrous metals and not provided with structural steel system
   1. Pre-Fabricated Steel Stair
   2. Guard and Hand Rails
   3. Loose Lintels
   4. Pipe Bollard

1.02 RELATED REQUIREMENTS

A. Other Sections in Division 5

1.03 SUBMITTALS

A. Submit for review shop drawings, product data, and, if requested, test reports.

1.04 QUALITY ASSURANCE

A. Comply with governing codes and regulations. Provide products of acceptable manufacturers which have been in satisfactory use in similar service for three years. Use experienced installers. Use only AWS-certified welders. Deliver, handle and store materials in accordance with manufacturer's instructions.

1.05 REFERENCE STANDARDS

A. Comply with relevant portions of the latest editions of applicable ASTM, ANSI, and AWS standards.

PART 2 – PRODUCTS

2.01 MATERIALS

A. In fabricating items which will be exposed to view, limit materials to those which are free from surface blemishes, pitting, rolled trade names, and roughness.

B. Comply with following standards, as applicable:
   1. Steel plates, shapes, and bars: ASTM A36.
   2. Steel plates, bent or cold-formed: ASTM A283 grade C.
   3. Steel tubing, hot-formed, welded, seamless: ASTM A501.
   4. Steel bars and bar-size shapes: ASTM A306, grade 65, or ASTM A36.
   5. Cold-finished steel bars: ASTM A108.
   6. Cold-rolled carbon steel sheets: ASTM A336.
   7. Galvanized carbon steel sheets: ASTM A526, with G90 zinc coating in accordance with ASTM A525.
   8. Stainless steel sheets: AISI type 302 or 304, 24 gage, no. 4 finish.

9. Gray iron castings: ASTM A48, class 10.
10. Malleable iron castings: ASTM A47.
11. Steel pipe: ASTM A53, grade A, schedule 40, black finish unless otherwise noted.
12. Concrete inserts:
    a. Threaded or wedge-type galvanized ferrous castings of malleable iron complying with ASTM A27;
    b. Provide required bolts, shims, and washers, hot-dip galvanized in accordance with ASTM A153.
13. Welded wire mesh: ASTM A185.

2.02 FASTENERS

A. General:
1. For exterior use, and in wet areas, provide zinc-coated fasteners.
2. Provide fasteners of type, grade, and class required for the particular use.

B. Comply with following standards as applicable:
1. Bolts and nuts: Provide hexagon-head regular type complying with ASTM A307, grade A.
2. Lag bolts: Square-head type, Fed Spec FF-B-561.
3. Machine screws: Cadmium-plated steel type, Fed Spec FF-S-111.
4. Washers:
    a. Plain washers: Fed Spec FF-W-92, round, carbon steel.
    b. Lock washers: Fed Spec FF-W-84, helical spring type carbon steel.
5. Toggle bolts: Provide type, class, and style needed but complying with Fed Spec FF-B-588;
6. Anchorage devices: Provide expansion shield complying with Fed Spec FF-S-325.

2.03 OTHER MATERIALS

A. Provide other materials, not specifically described but required for a complete and proper installation, as selected by Contractor subject to review by Architect.

2.04

A. Hot-dip galvanize ferrous metal items at exterior and where otherwise exposed to weather.
1. Galvanizing: ASTM A 525.
2. Galvanizing repair paint, zinc rich primer; Tnemec, PPG, ZRC Chemical Products or equal acceptable to the Architect.

2.05 SHOP PAINT

A. Rust-inhibitive primer for ungalvanized items: Use "10-99 Tnemec Primer" or "Rustoleum Number 5769 Primer".

B. Shop-prime all ungalvanized items except items to be embedded in concrete.

2.06 FABRICATION

A. Except as otherwise shown on the Drawings or the reviewed Shop Drawings, use materials of size, thickness, and type required to produce reasonable strength and durability in the work of this Section.

B. Fabricate with accurate angles and surfaces, true to the required lines and levels, grinding exposed welds smooth and flush, forming exposed connections with hair-line joints, and using concealed fasteners wherever possible.

C. Pre-Fabricated Steel Stair: size as indicated on plans; maintain 5'-0" clearance at bottom of ladder to nearest wall. An engineered pre-fabricated stair system shall be designed and stamped by a Texas licensed engineer.
1. W12x19 Stringer
2. Bent Tread Pan
3. Channel as necessary
4. Misc. beams as necessary
5. Bent Plates as necessary

D. Railings, Toe Boards and Brackets: Comply with ANSI A 12.1, A 58.1 and Part 1910 of the Occupational Safety and Health Standards (OSHA) for railings around floor openings and exposed edges of floors, stairs, ramps, balconies and similar locations. Also, provide handrails as required by ANSI A 12.1. Installed railings and supports shall withstand a 250 lb. load applied at any point, downward or horizontally, unless specified otherwise.

E. Provide brackets and anchors for railing posts and for handrail supports, as shown and as herein specified.

F. Pipe Railings: Custom fabricate pipe railings to the dimensions and details shown, with smooth bends and welded joints ground smooth and flush. Where details are not shown use 1-1/4" steel pipe with top of top rail height as required by code.
1. Fabricate interior pipe railings from steel pipe.
2. Fabricate pipe railings exposed to exterior from galvanized steel pipe.
3. Fabricate with closed ends.

G. Pipe Bollards: 6" diameter schedule 40 hot dip galvanized pipe bollards shall be installed 42" a.f.f. embedded 42" in concrete foundation. Welded ½" diameter bat rods to be set in concrete foundation. Bollard to be filled with concrete. Provide PVC bollard cover.

PART 3 – EXECUTION

3.01 SURFACE CONDITIONS

A. Examine the conditions under which work of this Section will be performed. Correct conditions detrimental to timely and proper completion of the Work. Do not proceed until satisfactory conditions are corrected.

3.02 COORDINATION

A. Coordinate with other trades to assure proper and adequate provision in the work of those trades for interface with the work of this Section.

3.03 PREPARATION

A. Take field measurements prior to preparation of shop drawings and fabrication. Do not delay job; allow for on-site cutting and fitting if field measurement not practical.

3.04 INSTALLATION

A. General:
1. Set work accurately into position, plumb, level, and free from rack.
2. Anchor firmly into position.
3. Where field welding is required, comply with AWS-recommended procedures of manual-shielded metal-arc welding for appearance and quality of weld and methods to be used in correcting welding work.
4. Grind exposed welds smooth and touch up prime coats.
5. Do not cut, weld, or abrade surfaces which have been hot-dip galvanized after fabrication and which are intended for bolted or screwed field connections.

B. Immediately after erection, clean field welds, bolted connections, and abraded areas of priming. Paint the exposed areas with same material used for shop priming.

C. Fabrications: Provide custom fabricated metal work including the following:
1. Structural support and bracing for operable partitions.
2. Galvanized steel lintels at brick masonry openings.
3. Other miscellaneous fabrications such as supports, brackets, railings, signposts, etc., as indicated on drawings.
4. Imbedded weld plates, inserts, studs and anchors.
5. Clip angles, brackets and corner and edge angles.
6. Miscellaneous framing and supports.

D. Touch-up damaged coatings with shop primer and galvanizing repair paint.

E. Clean work damaged or soiled by work of this Section.

F. Finish painting is specified in Section 09 91 00 Painting.

END OF SECTION 05 50 00

SECTION 06 10 00 - ROUGH CARPENTRY

PART 1 - GENERAL

1.01 SUMMARY: Provide miscellaneous wood blocking, bracing, nailers, furring and other concealed wood wherever shown or required, and sheathing for installation over metal framing.

1.02 QUALITY ASSURANCE: Comply with governing codes and regulations. Provide products of acceptable manufacturers which have been in satisfactory use in similar service for three years. Use experienced workers. Deliver, handle, and store materials in accordance with manufacturer's instructions.

1.03 REFERENCES: Factory Mutual Global Loss Prevention Data Sheet 1-49.

PART 2 - PRODUCTS

2.01 MATERIALS

A. Framing lumber: No. 2 Douglas Fir or Southern Yellow Pine, surfaced 4 sides, 15% maximum moisture content.

B. Plywood, APA C-D exterior grade: For roof decking for metal roofing areas, and for other substrates, blocking and wall-mounted panels where required; 3/4" thick.

C. Fasteners for Borate treated or Fire Treated lumber and plywood: Hot-dip galvanized nails and spikes, cadmium-plated screws and similar corrosion-resistant fasteners.

D. Pressure treated fire retardant materials: UL labeled and complying with UL FR-S Fire Hazard Classification, with a flame spread rating of 25 or less, where indicated on the drawings and where otherwise required by authorities having jurisdiction.

E. Pressure preservative treat all wood in contact with concrete, masonry, roofing, flashing, the ground, or that is subject to exposure to moisture.
   1. Pressure treat in accordance with AWPI Standard P-5, NWMA Standards, and Fed. Spec. TTW-571 with a minimum of 0.25 lb. of preservative per cubic foot; provide 0.4 lb. minimum for members in contact with the ground.

F. Sheathing: Densglass Gold water-resistant sheathing panels. Provide self-adhesive waterproofing joint tape manufactured for the purpose (not duct tape) and other necessary fasteners and accessories.

G. Fasteners for preservative treated wood:
   1. Nails: Type 316 stainless steel, ring shank.
   2. Bolts, Nuts, Washers: Under 1/2 inch diameter Type 316 stainless steel, 1/2 inch and larger hot dip galvanized. No cold galvanized or electrogalvanized material shall be used.

PART 3 - EXECUTION

3.01 INSTALLATION

A. Provide studs, joists, braces, furring, nailers, blocking, grounds and plywood substrate where required. Set work plumb, level, straight and true; accurately cut and aligned.

B. Secure all roof edge blocking in accordance with FMG 1-49 requirements. Install 50% additional fasteners at all corners.

C. Install materials in accordance with manufacturer's instructions and in proper relation to adjacent construction. Coordinate with work of other sections.

D. Comply with manufacturer's requirements for cutting, handling, fastening and working treated materials.

E. Screw-apply sheathing to studs in running bond with inverted V joints to shed water. Apply self-adhesive waterproofing joint tape over all joints.

F. Restore damaged components. Protect work from damage.

END OF SECTION 06 10 00

SECTION 06 16 00 - SHEATHING

PART 1 - GENERAL

1.01 SUMMARY

A. Section Includes:

1. Wall sheathing.
2. Roof sheathing.
3. Parapet sheathing.
4. Composite nail base insulated roof sheathing.
5. Subflooring.
6. Underlayment.
7. Sheathing joint and penetration treatment.

B. Related Requirements:

1. Section 06 10 00 "Rough Carpentry" Section 06 10 53 "Miscellaneous Rough Carpentry" for plywood backing panels.
2. Section 072500 "Weather Barriers" for water-resistive barrier applied over wall sheathing.

1.02 PREINSTALLATION MEETINGS

A. Preinstallation Conference: Conduct conference at HC ESD 9 Administrative Complex 10710 Telge Road.

1. Review air-barrier and water-resistive glass-mat gypsum sheathing requirements and installation, special details, transitions, mockups, air-leakage testing, protection, and work scheduling that covers air-barrier and water-resistive glass-mat gypsum sheathing.

1.03 ACTION SUBMITTALS

A. Product Data: For each type of process and factory-fabricated product. Indicate component materials and dimensions and include construction and application details.

1. Include data for wood-preservative treatment from chemical treatment manufacturer and certification by treating plant that treated plywood complies with requirements. Indicate type of preservative used and net amount of preservative retained.
2. Include data for fire-retardant treatment from chemical treatment manufacturer and certification by treating plant that treated plywood complies with requirements. Include physical properties of treated materials.
3. For fire-retardant treatments, include physical properties of treated plywood both before and after exposure to elevated temperatures, based on testing by a qualified independent testing agency in accordance with ASTM D5516.
4. For products receiving waterborne treatment, include statement that moisture content of treated materials was reduced to levels specified before shipment to Project site.

B. Shop Drawings: For air-barrier and water-resistive glass-mat gypsum sheathing assemblies.

1. Show locations and extent of sheathing, accessories, and assemblies specific to Project conditions.
2. Include details for sheathing joints, fasteners, openings, penetrations, inside and outside corners, terminations, and tie-ins with adjoining construction.
3. Include details of interfaces with other materials that form part of air barrier.

1.04 INFORMATIONAL SUBMITTALS

A. Qualification Data: For Installer. Installer trained by a qualified trainer.

B. Product Certificates: From air-barrier and water-resistive glass-mat gypsum sheathing manufacturer, and accessory material manufacturer, certifying compatibility of sheathing accessory materials with Project materials that connect to or that come in contact with the sheathing.

C. Product Test Reports: For each air-barrier and water-resistive glass-mat gypsum sheathing assembly, indicating compliance with specified requirements, for tests performed by a qualified testing agency.

D. Evaluation Reports: For the following, from ICC-ES:

1. Wood-preservative-treated plywood.
2. Fire-retardant-treated plywood.
3. Foam-plastic sheathing.
4. Air-barrier and water-resistive glass-mat gypsum sheathing.

E. Field quality-control reports.

1.05 QUALITY ASSURANCE

A. Installer Qualifications: An entity that employs installers and supervisors who are trained and approved by manufacturer of air- and water-resistive barrier glass-mat gypsum sheathing.

B. Mockups: Build mockups to set quality standards for materials and execution and for preconstruction testing.

1. Build integrated mockups of exterior wall assembly 150 sq. ft incorporating backup wall construction, window, storefront, door frame and sill, ties and other penetrations, and flashing to demonstrate crack and joint treatment and sealing of gaps, terminations, and penetrations of air-barrier sheathing assembly.
   a. Coordinate construction of mockups to permit inspection and testing of sheathing before external insulation and cladding are installed.
   b. Include junction with roofing membrane building corner condition, adjacent material intersection, and foundation wall intersection.
   c. If Architect determines mockups do not comply with requirements, reconstruct mockups until mockups are approved.
2. Approval of mockups does not constitute approval of deviations from the Contract Documents contained in mockups unless Architect specifically approves such deviations in writing.
3. Subject to compliance with requirements, approved mockups may become part of the completed Work if undisturbed at time of Substantial Completion.

C. Testing Agency Qualifications:

1. For testing agency providing classification marking for fire-retardant-treated material, an inspection agency acceptable to authorities having jurisdiction that periodically performs inspections to verify that the material bearing the classification marking is representative of the material tested.
2. For testing and inspecting agency providing tests and inspections related to air-barrier and water-resistive glass-mat gypsum sheathing: an independent agency, qualified in accordance with ASTM E 329 for testing indicated.

1.06 PRECONSTRUCTION TESTING

A. Preconstruction Testing Service: a qualified testing agency to perform preconstruction testing on field mockups.

1.07 DELIVERY, STORAGE, AND HANDLING

A. Deliver materials in original, unopened packaging and store in an enclosed shelter providing protection from damage and exposure to the elements.

1. Store within temperature limits required by manufacturer.
2. Store air- and water-resistive sheathing board supported on risers on a flat platform.
3. Comply with manufacturer's written instructions for safety and handling.

B. Discard liquid materials that cannot be applied within their stated shelf life.

C. Store accessory materials in a location with constant ambient temperatures of 40 to 80 deg F.

D. Stack panels flat with spacers beneath and between each bundle to provide air circulation. Protect sheathing from weather by covering with waterproof sheeting, securely anchored. Provide for air circulation around stacks and under coverings.

1.08 FIELD CONDITIONS

A. Cold Weather Conditions:

1. Site Fluid-Applied, Vapor-Permeable Joint Flashing: Comply with manufacturer's cold weather application written instructions when atmospheric temperatures or substrate surface temperatures are less than 40 deg F.
2. Accessories and Sealants: Comply with manufacturer’s cold weather application instructions when atmospheric temperatures or substrate surface temperatures are less than 40 deg F.

B. Exposure: Comply with manufacturer's limitations on exposure of applied product.

1. Do not apply air-barrier joint flashing to sheathing surface that is frozen or has frost.

C. Protect adjacent substrates from environmental conditions that affect air barrier performance.

D. Coordinate installation of membrane air barrier with completion of roofing, below-grade, factory

fluid-applied membrane portion to site fluid-applied membrane portion and other work requiring interface with air barrier.

E. Schedule work for inspection of air-barrier applications prior to concealment.

F. Ensure air barriers are cured before covering with other materials.

1.09 WARRANTY

A. Manufacturer's Warranty for Air-Barrier Products: See manufacturer's published limited warranty.

1. Warranty Period for Air- and Water-Resistive Sheathing Board Assembly: Five years from date of Substantial Completion.

B. Manufacturer's Warranty for Site Fluid-Applied Air Barrier Products: Manufacturer agrees to furnish and install air barrier to repair or replace those materials installed in accordance with manufacturer's written instructions that exhibit material defects or otherwise fail to perform as a water-resistive barrier and air barrier, as defined in the 2015 IBC and the IECC, under normal use within specified warranty period.

1. Manufacturer will, at its option, replace nonconforming product or refund the purchase price of quantity of product shown to be nonconforming.
2. Access for Repair: Provide air-barrier system manufacturer with unimpeded pre- and post-occupancy access to Project facility and air-barrier system for purposes of testing, leak investigation, and repair, and to reinstall removed cladding materials upon completion of repair.
3. Warranty Period: Five years from date of Substantial Completion.

C. Manufacturer warranties specified in this article exclude deterioration or failure of air barriers from the following:

1. Movement of the structure caused by structural settlement or stresses on the air barrier exceeding manufacturer's written instructions for elongation.
2. Mechanical damage caused by outside agents.

PART 2 - PRODUCTS

2.01 PERFORMANCE REQUIREMENTS

A. Fire-Resistance Ratings: As tested in accordance with ASTM E119; testing by a qualified testing agency. Identify products with appropriate markings of applicable testing agency.

1. Fire-Resistance Ratings: Indicated by design designations from UL's "Fire Resistance Directory" or from the listings of another qualified testing agency.

B. Air-Barrier and Water-Resistive Glass-Mat Gypsum Sheathing Performance: Air-barrier and water-resistive glass-mat gypsum sheathing assembly, and seals with adjacent construction, shall be capable of performing as a continuous air barrier and as a liquid-water drainage plane flashed to discharge to the exterior incidental condensation or water penetration. Air-barrier assemblies

shall be capable of accommodating substrate movement and of sealing substrate expansion and control joints, construction material changes, penetrations tie-ins to installed waterproofing, and transitions at perimeter conditions without deterioration and air leakage exceeding specified limits.

2.02 WOOD PANEL PRODUCTS

A. Emissions: Products shall meet the testing and product requirements of the California Department of Public Health's "Standard Method for the Testing and Evaluation of Volatile Organic Chemical Emissions from Indoor Sources Using Environmental Chambers."

B. Thickness: As needed to comply with requirements specified, but not less than thickness indicated.

C. Factory mark panels to indicate compliance with applicable standard.

2.03 PRESERVATIVE-TREATED PLYWOOD

A. Preservative Treatment by Pressure Process: AWPA U1; Use Category UC2, Use Category UC3b for exterior construction not in contact with ground, and Use Category UC4a for items in contact with ground.

1. Preservative Chemicals: Acceptable to authorities having jurisdiction and containing no arsenic or chromium.

B. Mark plywood with appropriate classification marking of an inspection agency acceptable to authorities having jurisdiction.

C. Application: Treat all plywood unless otherwise indicated

2.04 FIRE-RETARDANT-TREATED PLYWOOD

A. General: Where fire-retardant-treated materials are indicated, use materials complying with requirements in this article that are acceptable to authorities having jurisdiction and with fire-test-response characteristics specified as determined by testing identical products per test method indicated by a qualified testing agency.

B. Fire-Retardant-Treated Plywood by Pressure Process: Products with a flame-spread index of 25 or less when tested in accordance with ASTM E84, and with no evidence of significant progressive combustion when the test is extended an additional 20 minutes, and with the flame front not extending more than 10.5 feet beyond the centerline of the burners at any time during the test.

1. Use treatment that does not promote corrosion of metal fasteners.
2. Exterior Type: Treated materials shall comply with requirements specified above for fire- retardant-treated plywood by pressure process after being subjected to accelerated weathering in accordance with ASTM D2898. Use for exterior locations and where indicated.
3. Interior Type A: Treated materials shall have a moisture content of 28 percent or less when tested in accordance with ASTM D3201/D3201M at 92 percent relative humidity.

Use where exterior type is not indicated.

4. Design Value Adjustment Factors: Treated lumber plywood shall be tested in accordance with ASTM D5516 and design value adjustment factors shall be calculated in accordance with ASTM D6305. Span ratings after treatment shall be not less than span ratings specified. For roof sheathing and where high-temperature fire-retardant treatment is indicated, span ratings for temperatures up to 170 deg F shall be not less than span ratings specified.

C. Kiln-dry material after treatment to a maximum moisture content of 15 percent. Do not use material that is warped or does not comply with requirements for untreated material.

D. Identify fire-retardant-treated plywood with appropriate classification marking of qualified testing agency.

E. Application: Treat all plywood unless otherwise indicated**.**

2.05 WALL SHEATHING

A. Plywood Sheathing: [DOC PS 1] [Either DOC PS 1 or DOC PS 2], [Exterior, Structural I] [Exterior] [Exposure 1, Structural I] [Exposure 1] sheathing.

1. Span Rating: Not less than [16/0] [20/0] [24/0] [32/16].
2. Nominal Thickness: Not less 1/2 inch.

B. Oriented-Strand-Board Sheathing: DOC PS 2, [Exposure 1, Structural I] [Exposure 1] sheathing.

1. Span Rating: Not less than [16/0] [20/0] [24/0] [24/16] [32/16].
2. Nominal Thickness: Not less than 1/2 inch.

C. Paper-Surfaced Gypsum Sheathing: ASTM C1396/C1396M, gypsum sheathing; with water-resistive-treated core and with water-repellent paper bonded to core's face, back, and long edges.

1. Basis-of-Design Product: Subject to compliance with requirements, provide GP Gypsum; ToughRock Sheathing or comparable product by one of the following:
   a. American Gypsum.
   b. National Gypsum Company.
   c. USG Corporation.
2. Type and Thickness: Type X, 5/8 inch thick.
3. Size: 48 by 96 inches for vertical installation.

D. Glass-Mat Gypsum Sheathing: ASTM C1177/C1177M.

1. Basis-of-Design Product: Subject to compliance with requirements, provide GP Gypsum; DensGlass® Sheathing or comparable product by one of the following:
   a. CertainTeed Corporation.
   b. Continental Building Products, LLC.
   c. National Gypsum Company.
   d. USG Corporation.
2. Type and Thickness: [Regular, 1/2 inch] [Type X, 5/8 inch] thick.
3. Size: [48 by 96 inches] [48 by 108 inches] [48 by 120 inches] [1200 by 2400 mm] [1200

by 2750 mm] [1200 by 3050 mm] for vertical installation.

E. Air-Barrier and Water-Resistive Glass-Mat Gypsum Sheathing: ASTM C1177/C1177M, Type X, fiberglass mat gypsum sheathing with integral weather-resistant barrier and air barrier complying with ASTM E2178 and ICC-ES AC 212.

1. Basis-of-Design Product: Subject to compliance with requirements, provide GP Gypsum and PROSOCO, Inc.; DensElement™ Barrier System or comparable product by one of the following:
    a. USG Corporation.
2. Thickness: 5/8 inch thick.
3. Board Type: Type X.
4. Size: 48 by 96 inches for vertical and horizontal installation.
5. Air- and Water-Resistive Flashing Thickness: Minimum 16-mil wet film thickness.
6. Edges: Square.
7. Flashing and Transition Strips: As acceptable to sheathing manufacturer.
8. Air Permeance: Maximum 0.04 cfm/sq. ft. pressure difference when tested in accordance with ASTM E 2178.
9. Vapor Permeance: Minimum [25 perms] [30 perms] when tested in accordance with ASTM E96/E96M, Water Method, Procedure B.
10. Sheathing Assembly Air Leakage: Maximum [0.04 cfm/sq. ft. of surface area at 1.57 lbf/sq. ft.] **<Insert value>** when tested in accordance with ASTM E2357.
11. Fire Propagation Characteristics: Complies with NFPA 285 testing as part of an approved assembly.
12. Combustion Characteristics; ASTM E84: Class A.
13. Board Product Antifungal Properties; ASTM D3273: 10; zero defacement.
14. VOC Content - Fluid-Applied Flashing: 50 g/L or less.
15. UV and Weathering Resistance: Can be exposed to sunlight and weather for 12 months in accordance with manufacturer's written instructions.
16. Provide primers, transition strips, termination strips, joint reinforcing fabric and strips, joint sealants, counterflashing strips, flashing sheets and metal termination bars, termination mastic, substrate patching materials, adhesives, tapes, foam sealants, lap sealants, and other accessory materials that are recommended in writing by sheathing manufacturer to produce a complete air-barrier assembly and that are compatible with primary air-barrier material and adjacent construction to which they may seal.
    a. General: Provide compatible air-barrier accessory materials furnished or recommended by air-barrier manufacturer as required by Project conditions to produce a complete air-barrier assembly identical to tested assemblies meeting performance requirements.
    b. Joint Backing: See Section 079200 "Joint Sealants" for backing materials.
    c. Primer: Liquid primer recommended by air-barrier manufacturer for exposed gypsum core edges.
        i. Basis-of-Design Product: Subject to compliance with requirements, provide PROSOCO, Inc.; PorousPrep Sealer or comparable product.
        ii. Color: Blue.
    d. Fluid-Applied Air-Barrier Flashing: Site-applied for application to joints fasteners, penetrations, openings and material transitions.
        i. Basis-of-Design Product: Subject to compliance with requirements, provide PROSOCO, Inc.; FastFlash Fluid-applied Flashing or comparable product.

ii. Color: Red.

e. Flashing and Transition Strip: Preformed silicone extrusion, 24 mils thick.

i. Basis-of-Design Product: Subject to compliance with requirements, provide PROSOCO, Inc.; SureSpan EX or comparable product.

F. Cellulose Fiber-Reinforced Gypsum Sheathing: ASTM C1278/C1278M, gypsum sheathing.

1. Manufacturers: Subject to compliance with requirements, provide products by the following:
   a. USG Corporation.
2. Product: Subject to compliance with requirements, provide "Fiberock Sheathing with Aqua-Tough" by United States Gypsum Co.
3. Type and Thickness: [Type X, 5/8 inch thick.
4. Size: 48 by 96 inches

G. Cementitious Backer Units: ASTM C1325, Type A.

1. Manufacturers: Subject to compliance with requirements, provide products by one of the following:
   a. C-Cure.
   b. Custom Building Products.
   c. FinPan, Inc.
   d. USG Corporation.
2. Thickness: 5/8 inch as indicated.

H. Fiberboard Sheathing: ASTM C208, Type IV, [**Grade 1 (Regular)**] [**Grade 2 (Structural)**] cellulosic fiberboard sheathing with square edges, [**1/2 inch**] [**25/32 inch**] thick.

I. Extruded-Polystyrene-Foam Sheathing: ASTM C578, Type IV, in manufacturer's standard lengths and widths with tongue-and-groove or shiplap long edges as standard with manufacturer.

1. Manufacturers: Subject to compliance with requirements, provide products by one of the following:
   a. DiversiFoam Products.
   b. Dow Chemical Company (The).
   c. Kingspan Insulation Limited.
   d. Owens Corning.
2. Thickness: [3/4 inch] [1 inch] [As indicated].
3. Flame Propagation Test: Materials and construction shall be as tested in accordance with NFPA 285.

J. Foil-Faced, Polyisocyanurate-Foam Sheathing: ASTM C1289, Type I or Type II, Class 2, rigid, cellular, polyisocyanurate thermal insulation. Foam-plastic core and facings shall have a flame-spread index of 25 or less when tested individually.

1. Manufacturers: Subject to compliance with requirements, provide products by one of the following:
   a. Atlas EPS; a Division of Atlas Roofing Corporation.
   b. Carlisle Coatings & Waterproofing Inc.
   c. Dow Chemical Company (The).

d. Firestone Building Products.
e. Hunter Panels.
f. Rmax, Inc.

2. Thickness: [7/16 inch] [1/2 inch] [5/8 inch] [3/4 inch] [1 inch] [As indicated].
3. Flame Propagation Test: Materials and construction shall be as tested in accordance with NFPA 285.

2.06 ROOF SHEATHING

A. Plywood Sheathing: [DOC PS 1] [Either DOC PS 1 or DOC PS 2], [Exterior, Structural I] [Exterior] [Exposure 1, Structural I] [Exposure 1] sheathing.

1. Span Rating: Not less than [16/0] [20/0] [24/0] [32/16] [40/20] [48/24].
2. Nominal Thickness: Not less than [15/32 inch] [1/2 inch].

B. Oriented-Strand-Board Sheathing: DOC PS 2, [Exposure 1, Structural I] [Exposure 1] sheathing.

1. Span Rating: Not less than [16/0] [20/0] [24/0] [24/16] [32/16] [40/20] [48/24].
2. Nominal Thickness: Not less than [7/16 inch] [15/32 inch] [1/2 inch] [5/8 inch] [3/4 inch].

C. Fiberglass-Mat-Faced Gypsum Roof Board:

1. Basis-of-Design Product: Subject to compliance with requirements, provide GP Gypsum; DensDeck® Prime Roof Board or comparable product by one of the following:
   a. <Insert manufacturer's name>.
2. Thickness: [1/4 inch] [1/2 inch] [5/8 inch] thick.
3. Size: [4 by 4 feet)] [4 by 8 feet].
4. Metal-Deck Flute Span: [2-5/8 inches] [5 inches] [8 inches].
5. Fire-Resistance Rating: Class A in accordance with UL 790 and ASTM E108.
6. Combustibility: Noncombustible in accordance with ASTM E136.
7. Flame Spread and Smoke Development: Zero and zero in accordance with ASTM E84.
8. R-value: [0.28] [0.56] [0.67] in accordance with ASTM C518.
9. Vapor Permeance: Minimum [17 perms] [23 perms] [30 perms] when tested in accordance with ASTM E96/E96M, Water Method, Procedure B.
10. Water Absorption (Percent of Weight): 5 percent or less in accordance with ASTM C473.
11. Surface Water Absorption: Nominal 0.035 oz. in accordance with ASTM C473.
12. Compressive Strength: 900 lbf/sq. in. in accordance with ASTM C473.
13. Mold Resistance: 10 in accordance with ASTM D3273.

2.07 PARAPET SHEATHING

A. Plywood Sheathing: [DOC PS 1] [Either DOC PS 1 or DOC PS 2], [Exterior, Structural I] [Exterior] [Exposure 1, Structural I] [Exposure 1] sheathing.

1. Span Rating: Not less than [16/0] [20/0] [24/0] [32/16] [40/20] [48/24].
2. Nominal Thickness: Not less than [15/32 inch [1/2 inch].

B. Oriented-Strand-Board Sheathing: DOC PS 2, [Exposure 1, Structural I] [Exposure 1] sheathing.

1. Span Rating: Not less than [16/0] [20/0] [24/0] [24/16] [32/16] [40/20] [48/24].
2. Nominal Thickness: Not less than [7/16 inch] [15/32 inch] [1/2 inch] [5/8 inch] [3/4 inch].

C. Glass-Mat Gypsum Sheathing: ASTM C 1177/1177M.

1. Basis-of-Design Product: Subject to compliance with requirements, provide GP Gypsum; DensDeck® Prime Roof Board or comparable product by one of the following:
   a. CertainTeed Corporation.
   b. National Gypsum Company.
   c. USG Corporation.
2. Type and Thickness: Type X, 5/8 inch thick.
3. Size: 48 by 96 inches.

D. Cementitious Backer Units: ASTM C1325, Type A.

1. Manufacturers: Subject to compliance with requirements, provide products by one of the following:
   a. C-Cure.
   b. Custom Building Products.
   c. FinPan, Inc.
   d. USG Corporation.
2. Thickness: 5/8 inch.

2.08 COMPOSITE NAIL BASE INSULATED ROOF SHEATHING

A. Oriented-Strand-Board-Surfaced, Polyisocyanurate-Foam Sheathing: ASTM C1289, Type V with DOC PS 2, Exposure 1 oriented strand board on one face.

1. Manufacturers: Subject to compliance with requirements, provide products by one of the following:
   a. Atlas EPS; a Division of Atlas Roofing Corporation.
   b. Cornell Corporation.
   c. Dow Chemical Company (The).
   d. Hunter Panels.
   e. Johns Manville; a Berkshire Hathaway company.
   f. Rmax, Inc.
2. Polyisocyanurate-Foam Thickness: [1 inch] [1-1/2 inches] [2 inches] [2-1/2 inches] [3 inches] [3-1/2 inches] [4 inches].
3. Oriented-Strand-Board Nominal Thickness: [7/16 inch] [5/8 inch].

B. Vented, Oriented-Strand-Board-Surfaced, Polyisocyanurate-Foam Sheathing: ASTM C1289, Type II, Class 1, with DOC PS 2, Exposure 1 oriented strand board adhered to spacers on one face.

1. Manufacturers: Subject to compliance with requirements, provide products by one of the following:
   a. Atlas EPS; a Division of Atlas Roofing Corporation.

b. Cornell Corporation.
c. Dow Chemical Company (The).
d. Hunter Panels.
e. Johns Manville; a Berkshire Hathaway company.
f. Rmax, Inc.

2. Polyisocyanurate-Foam Thickness: [1 inch] [1-1/2 inches] [2 inches] [2-1/2 inches] [3 inches] [3-1/2 inches] [4 inches].
3. Oriented-Strand-Board Nominal Thickness: [7/16 inch] [5/8 inch].
4. Spacers: Wood furring strips or blocks not less than 3/4-inch-thick and spaced not more than [12 inches] [16 inches] [24 inches] o.c.

2.09 SUBFLOORING AND UNDERLAYMENT

A. Plywood Combination Subfloor-Underlayment: DOC PS 1, [Exterior, Structural I, C-C Plugged] [Exterior, C-C Plugged] [Exposure 1, Structural I, Underlayment] [Exposure 1, Underlayment] single-floor panels.

1. Span Rating: Not less than [16] [20] [24] [32] [48].
2. Nominal Thickness: Not less than [23/32 inch] [7/8 inch] [1 inch].
3. Edge Detail: [Square] [Tongue and groove].
4. Surface Finish: Fully sanded face.

B. Oriented-Strand-Board Combination Subfloor-Underlayment: DOC PS 2, Exposure 1 single-floor panels.

1. Span Rating: Not less than [16] [20] [24] [32] [48].
2. Nominal Thickness: Not less than [23/32 inch] [7/8 inch] [1 inch].
3. Edge Detail: [Square] [Tongue and groove].
4. Surface Finish: [Fully sanded] [Resin-impregnated overlay] face.

C. Plywood Subflooring: [DOC PS 1] [Either DOC PS 1 or DOC PS 2], [Exterior, Structural I] [Exterior] [Exposure 1, Structural I] [Exposure 1] single-floor panels or sheathing.

1. Span Rating: Not less than [16] [20] [24] [32] [48] [or] [32/16] [40/20] [48/24].
2. Nominal Thickness: Not less than [23/32 inch] [7/8 inch] [1 inch].

D. Oriented-Strand-Board Subflooring: DOC PS 2, Exposure 1[, Structural I sheathing] [single-floor panels or sheathing].

1. Span Rating: Not less than [16] [20] [24] [32] [48] [or] [32/16] [40/20] [48/24] [60/32].
2. Nominal Thickness: Not less than [23/32 inch] [7/8 inch] [1 inch].

E. Underlayment: Provide underlayment in nominal thicknesses indicated or, if not indicated, not less than 1/4 inch over smooth subfloors and not less than 3/8 inch over board or uneven subfloors.

1. Plywood Underlayment for Resilient Flooring: DOC PS 1, [**Exterior A-C**] [**Exterior B-C**] [**Exterior, C-C Plugged**] [**Exposure 1 Underlayment**] with fully sanded face.
2. Plywood Underlayment for Ceramic Tile: DOC PS 1, Exterior, C-C Plugged, not less than 5/8-inch nominal thickness.
3. Plywood Underlayment for Carpet: DOC PS 1, [Exterior, C-C Plugged] [Exposure 1,

Underlayment] [Interior, Underlayment].

4. Particleboard Underlayment: ANSI A208.1, [**Grade PBU**] [**Grade M-2**].
    a. Particleboard shall be made without urea formaldehyde.
    b. Particleboard shall comply with the testing and product requirements of the California Department of Public Health's "Standard Method for the Testing and Evaluation of Volatile Organic Chemical Emissions from Indoor Sources Using Environmental Chambers."
    c. Particleboard shall be made without urea formaldehyde.
    d. Particleboard shall have formaldehyde emission rates not greater than 0.09 ppm when tested in accordance with ASTM D6007 or ASTME 1333.
    e. Particleboard shall be made without urea formaldehyde.
5. Hardboard Underlayment: ANSI A135.4, Class 4 (Service), Surface S1S; with back side sanded.

2.10 FASTENERS

A. General: Provide fasteners of size and type indicated that comply with requirements specified in this article for material and manufacture.

    1. For [roof] [parapet] [and] [wall] sheathing, provide fasteners [with hot-dip zinc coating complying with ASTM A153/A153M] [of Type 304 stainless steel].

B. Nails, Brads, and Staples: ASTM F1667.

C. Power-Driven Fasteners: Fastener systems with an evaluation report acceptable to authorities having jurisdiction, based on ICC-ES AC70.

D. Screws for Fastening Sheathing to Wood Framing: ASTM C1002.

E. Screws for Fastening Wood Structural Panels to Cold-Formed Metal Framing: ASTM C954, except with wafer heads and reamer wings, length as recommended by screw manufacturer for material being fastened.

F. Screws for Fastening Gypsum Sheathing to Cold-Formed Metal Framing: Steel drill screws, in length recommended by sheathing manufacturer for thickness of sheathing to be attached.

    1. For steel framing less than 0.0329-inch-thick, use screws that comply with ASTM C1002.
    2. For steel framing from 0.033 to 0.112-inch-thick, use screws that comply with ASTM C954.

G. Screws for Fastening Composite Nail Base Insulated Roof Sheathing to Metal Roof Deck: Steel drill screws, in type and length recommended by sheathing manufacturer for thickness of sheathing to be attached, with organic-polymer or other corrosion-protective coating having a salt-spray resistance of more than 800 hours in accordance with ASTM B117. Provide washers or plates if recommended by sheathing manufacturer.

2.11 SHEATHING JOINT-AND-PENETRATION TREATMENT MATERIALS

A. Sealant for [Paper-Surfaced] [Glass-Mat] Gypsum Sheathing: Elastomeric, medium-modulus, neutral-curing silicone joint sealant compatible with joint substrates formed by gypsum

sheathing and other materials, recommended by sheathing manufacturer for application indicated and complying with requirements for elastomeric sealants specified in Section 079200 "Joint Sealants."

B. Sealant for Glass-Mat Gypsum Sheathing: Silicone emulsion sealant complying with ASTM C834, compatible with sheathing tape and sheathing and recommended by tape and sheathing manufacturers for use with glass-fiber sheathing tape and for covering exposed fasteners.

1. Sheathing Tape: Self-adhering glass-fiber tape, minimum 2 inches wide, 10 by 10 or 10 by 20 threads/inch, of type recommended by sheathing and tape manufacturers for use with silicone emulsion sealant in sealing joints in glass-mat gypsum sheathing and with a history of successful in-service use.

C. Sheathing Tape for Foam-Plastic Sheathing: Pressure-sensitive plastic tape recommended by sheathing manufacturer for sealing joints and penetrations in sheathing.

PART 3 - EXECUTION

3.1 INSTALLATION, GENERAL

A. Do not use materials with defects that impair quality of sheathing or pieces that are too small to use with minimum number of joints or optimum joint arrangement. Arrange joints so that pieces do not span between fewer than three support members.

B. Cut panels at penetrations, edges, and other obstructions of work; fit tightly against abutting construction unless otherwise indicated.

C. Securely attach to substrate by fastening as indicated, complying with the following:

1. Table 2304.9.1, "Fastening Schedule," in the ICC's International Building Code.

D. Use common wire nails unless otherwise indicated. Select fasteners of size that will not fully penetrate members where opposite side will be exposed to view or will receive finish materials. Make tight connections. Install fasteners without splitting wood.

E. Coordinate [**wall**] [**parapet**] [**and**] [**roof**] sheathing installation with flashing and joint-sealant installation so these materials are installed in sequence and manner that prevent exterior moisture from passing through completed assembly.

F. Do not bridge building expansion joints; cut and space edges of panels to match spacing of structural support elements.

G. Coordinate sheathing installation with installation of materials installed over sheathing so sheathing is not exposed to precipitation or left exposed at end of the workday when rain is forecast.

3.2 WOOD STRUCTURAL PANEL INSTALLATION

A. General: Comply with applicable recommendations in APA Form No. E30, "Engineered Wood Construction Guide," for types of structural-use panels and applications indicated.

B. Fastening Methods: Fasten panels as indicated below:

1. Combination Subfloor-Underlayment:
   a. [**Glue and nail**] [**Nail**] to wood framing.
   b. Screw to cold-formed metal framing.
   c. Space panels 1/8 inch apart at edges and ends.
2. Subflooring:
   a. [Glue and nail] [Nail] [Nail or staple] to wood framing.
   b. Screw to cold-formed metal framing.
   c. Space panels 1/8 inch apart at edges and ends.
3. Wall and Roof Sheathing:
   a. [Nail] [Nail or staple] to wood framing. [Apply a continuous bead of glue to framing members at edges of wall sheathing panels.]
   b. Screw to cold-formed metal framing.
   c. Space panels 1/8 inch apart at edges and ends.
4. Underlayment:
   a. [**Nail**] [**Nail or staple**] to subflooring.
   b. Space panels 1/32 inch apart at edges and ends.
   c. Fill and sand edge joints of underlayment receiving resilient flooring immediately before installing flooring.

3.03 GYPSUM SHEATHING INSTALLATION

A. Comply with GA-253 and with manufacturer's written instructions.

1. Fasten gypsum sheathing to wood framing with [**screws**].
2. Fasten gypsum sheathing to cold-formed metal framing with screws.
3. Install panels with a 3/8-inch gap where non-load-bearing construction abuts structural elements.
4. Install panels with a 1/4-inch gap where they abut masonry or similar materials that might retain moisture, to prevent wicking.

B. Apply fasteners so heads bear tightly against face of sheathing, but do not cut into facing.

C. Horizontal Installation: Abut ends over centers of studs, and stagger end joints of adjacent panels not less than one stud spacing. Attach at perimeter and within field of panel to each stud.

1. Space fasteners approximately 8 inches o.c. and set back a minimum of 3/8 inch from edges and ends of panels.
2. For sheathing under stucco cladding, panels may be initially tacked in place with screws if overlying self-furring metal lath is screw-attached through sheathing to studs immediately after sheathing is installed.

D. Vertical Installation: Install vertical edges centered over studs. Abut ends and edges with those of adjacent panels. Attach at perimeter and within field of panel to each stud.

1. Space fasteners approximately 8 inches o.c. and set back a minimum of 3/8 inch from edges and ends of panels.
2. For sheathing under stucco cladding, panels may be initially tacked in place with screws if overlying self-furring metal lath is screw-attached through sheathing to studs immediately after sheathing is installed.

E. Seal sheathing joints in accordance with sheathing manufacturer's written instructions.

1. Apply elastomeric sealant to joints and fasteners and trowel flat. Apply sufficient amount of sealant to completely cover joints and fasteners after troweling. Seal other penetrations and openings.
2. Apply glass-fiber sheathing tape to glass-mat gypsum sheathing joints and apply and trowel sealant to embed entire face of tape in sealant. Apply sealant to exposed fasteners with a trowel so fasteners are completely covered. Seal other penetrations and openings.

F. Air-Barrier and Water-Resistive Glass-Mat Gypsum Sheathing:

1. Install accessory materials in accordance with sheathing manufacturer's written instructions and details to form a seal with adjacent construction, to seal fasteners, and ensure continuity of air and water barrier.
    a. Coordinate the installation of sheathing with installation of roofing membrane and base flashing to ensure continuity of air barrier with roofing membrane.
    b. Install transition strip on roofing membrane or base flashing, so that a minimum of 2 inches of coverage is achieved over each substrate.
2. Connect and seal sheathing material continuously to air barriers specified under other Sections as well as to roofing-membrane air barrier, concrete below-grade structures, floor-to-floor construction, exterior glazing and window systems, glazed curtain-wall systems, storefront systems, exterior louvers, exterior door framing, and other construction used in exterior wall openings, using accessory materials.
3. Apply joint sealants forming part of air-barrier assembly within manufacturer's recommended application temperature ranges. Consult manufacturer when sealant cannot be applied within these temperature ranges.
4. Wall Openings: Prime concealed, perimeter frame surfaces of windows, curtain walls, storefronts, and doors. Apply fluid-applied air-barrier flashing so that a minimum of 2 inches of coverage is achieved over each substrate. Maintain 2 inches of full contact over firm bearing to perimeter frames, with not less than 2 inches of full contact.
    a. Fluid-Applied Air-Barrier Flashing: Site-applied for application to openings and material transitions.
    b. Transition Strip: Roll firmly to enhance adhesion.
    c. Preformed Silicone Extrusion: Set in full bed of silicone sealant applied to walls, frame, and air-barrier material.
5. Fill gaps in perimeter frame surfaces of windows, curtain walls, storefronts, doors, and miscellaneous penetrations of sheathing material with foam sealant.
6. Seal strips and transition strips around masonry reinforcing or ties and penetrations with fluid-applied air-barrier flashing.
7. Seal top of through-wall flashings to sheathing with an additional 6-inch-wide, fluid-applied air-barrier flashing.
8. Seal exposed edges of strips at seams, cuts, penetrations, and terminations not concealed by metal counter flashings or ending in reglets with fluid-applied air-barrier flashing.
9. Repair punctures, voids, and deficient lapped seams fluid-applied air-barrier flashing extending 6 inches beyond repaired areas.

G. Fiberglass-Mat-Faced Gypsum Roof Board Installation:

1. Adhesive Installation over Thermal Insulation, under Single-Ply Roofing Systems:

a. Stagger roof-board end- and edge-joints a minimum of 12 inches over installed insulation.
b. Adhere roof boards over installed insulation using adhesive in accordance with roofing system manufacturer's written instructions. Apply overall pressure to ensure full adhesion. Do not slide into place.

2. Hot-Mopped Installation over Thermal Insulation, under Modified Bitumen Roofing Systems:
   a. Stagger roof-board end- and edge-joints a minimum of [6 inches] [12 inches over installed insulation].
   b. Prior to hot-mopping roof boards to substrates, ensure that roof boards are dry with free-moisture content less than 1 percent by weight using moisture meter set to gypsum scale.
   c. Apply asphalt only at temperatures between 425 and 450 deg°F.
   d. Flood Mopping: Flood mop roof boards to substrate followed by flood mopped membrane application as follows:
      i. Verify that roof boards and substrate are dry.
      ii. Allow applied roof-board asphalt to cool prior to mopping membrane base sheet.
      iii. Allow base ply to cool before mopping additional plies or cap sheet to limit amount of direct heat applied to boards.
3. Installation Directly on Metal Decking:

   a. Install roof boards with long edges bearing-on and parallel-to top flutes to support edges.
   b. Stagger roof-board end- and edge-joints a minimum of 6 inches.
   c. Adhesive Installation: Adhere roof boards to metal deck using adhesive in accordance with roofing system manufacturer's written instructions. Apply overall pressure to ensure full adhesion. Do not slide into place.
   d. Hot-Mopped Installation:

      i. Prior to hot-mopping roof boards to substrates, ensure that roof boards are dry with free-moisture content less than 1 percent by weight using moisture meter set to gypsum scale.

      ii. Apply asphalt only at temperatures between 425 and 450 deg°F.

      iii. Flood Mopping: Flood mop roof boards to substrate followed by flood mopped membrane application as follows:

      a) Verify that roof boards and substrate are dry.
      b) Allow applied roof-board asphalt to cool prior to mopping membrane base sheet.
      c) Allow base ply to cool before mopping additional plies or cap sheet to limit amount of direct heat applied to boards.

3.04 CEMENTITIOUS BACKER UNIT INSTALLATION

A. Install panels and treat joints in accordance with ANSI A108.11 and manufacturer's written instructions for type of application indicated.

3.05 FIBERBOARD SHEATHING INSTALLATION

A. Comply with ASTM C846 and with manufacturer's written instructions.

B. Fasten fiberboard sheathing panels to intermediate supports and then at edges and ends. Use galvanized roofing nails; comply with manufacturer's recommended spacing and referenced fastening schedule. Drive fasteners flush with surface of sheathing and locate perimeter fasteners at least 3/8 inch from edges and ends.

C. Install sheathing vertically with long edges parallel to, and centered over, studs. Install solid wood blocking where end joints do not occur over framing. Allow 1/8-inch open space between edges and ends of adjacent units. Stagger horizontal joints if any.

D. Cover sheathing as soon as practical after installation to prevent deterioration from wetting.

3.06 FOAM-PLASTIC SHEATHING INSTALLATION

A. Comply with manufacturer's written instructions.

B. Foam-Plastic Wall Sheathing: Install vapor-relief strips or equivalent for permitting escape of moisture vapor that otherwise would be trapped in stud cavity behind sheathing.

C. Apply sheathing tape to joints between foam-plastic sheathing panels and at items penetrating sheathing. Apply at upstanding flashing to overlap both flashing and sheathing.

3.07 PARTICLEBOARD UNDERLAYMENT INSTALLATION

A. Comply with CPA's recommendations for type of subfloor indicated. Fill and sand gouges, gaps, and chipped edges. Sand uneven joints flush.

1. Fastening Method: [**Glue and nail**] [**Nail**] [**Nail or staple**] underlayment to subflooring.

3.08 HARDBOARD UNDERLAYMENT INSTALLATION

A. Comply with CPA's recommendations and hardboard manufacturer's written instructions for preparing and applying hardboard underlayment.

1. Fastening Method: [**Nail**] [**Nail or staple**] underlayment to subflooring.

3.09 FIELD QUALITY CONTROL

A. ABAA Quality Assurance Program: Perform examinations, preparation, installation, testing, and inspections under ABAA's Quality Assurance Program.

B. Testing and Inspecting Agency: Engage a qualified testing agency to perform tests and inspections.

C. Inspections: Air-barrier and water-resistive glass-mat gypsum sheathing, accessories, and installation are subject to inspection for compliance with requirements. Inspections may include the following:

1. Continuity of air-barrier system has been achieved throughout the building envelope

with no gaps or holes.
2. Fluid-applied air-barrier flashing has complied with minimum requirements.
3. Primer and fluid-applied air-barrier flashing have been applied on cut edges.
4. Strips and transition strips have been firmly adhered to substrate.
5. Compatible materials have been used.
6. Transitions at changes in direction and structural support at gaps have been provided.
7. Connections between assemblies (sheathing and sealants) have complied with requirements for cleanliness, surface preparation and priming, structural support, integrity, and continuity of seal.
8. All penetrations have been sealed.

D. Air barriers will be considered defective if they do not pass tests and inspections.

E. Repair damage to air barriers caused by testing; follow manufacturer's written instructions.

F. Prepare test and inspection reports.

END OF SECTION 06 16 00

SECTION 06 40 23 - INTERIOR ARCHITECTURAL MILLWORK

PART 1 - GENERAL

1.01 SUMMARY

A. This Section includes wood cabinets.
B. Work of this section, as shown or specified, shall be provided by the Interior Contractor and shall be in accordance with the requirements of the contract documents.

C. Submittals:
1. Product data.
2. Shop drawings showing location of each item, dimensioned plans and elevations, large-scale details, attachment devices, and other components.
3. Samples of specified wood, cut and finish. Samples shall be a minimum of 12” x 12” and full thickness. Finish face and edge shall be provided with sample.
4. A minimum of three different flitches of any and all veneers specified shall be submitted for approval. Flitches shall indicate the color, grain, texture, and finish range to be expected in the Project.
5. Where variations in wood and finish may occur, a minimum of three variations showing extremes which may be expected of any and all wood finishes as specified shall be submitted for approval. A minimum of 12” x 12”.
6. Where requested, a full size mock-up of panel or millwork assembly.
7. Samples of all mouldings shall be provided a minimum of 24” long. Sample shall indicated color, grain, and profile for approval.

D. AWI Quality Standard: Comply with "Architectural Woodwork Quality Standards" of the Architectural Woodwork Institute. Premium Grade for all materials, fabrications and workmanship for all work in this section.

E.Environmental Limitations: Do not deliver or install woodwork until building is enclosed, wet-work is completed, and HVAC system is operating and will maintain temperature and relative humidity at occupancy levels during the remainder of the construction period.

PART 2 - PRODUCTS

2.01 MATERIALS

A. All woodwork shall be new and shall conform to the Premium Grade requirements of the AWI Quality Standards, latest edition.

B. All lumber shall be kiln-dried to the average moisture content as recommended by the AWI Quality Standards, latest edition appropriate for the regional climatic conditions of the project site.

C. All solid wood elements shall be clear, straight-grain lumber of the best grade of specified species as listed by the NHLA. Lumber shall be free of any defects which might impair serviceability, aesthetics, and/or finish. Solid wood elements shall also be according to the following, unless indicated otherwise on drawings and/or specifications:

1. Specie of Face Woods receiving transparent finishes shall be as specified on the drawings and shall be selected for specified grain with uniform color and grain suitable for use with the finished plywood with which it is used.
2. Face Woods receiving opaque finishes shall be Birch, Poplar, or Custom Grade but otherwise shall have same specification as solid stock for Face Woods above.
3. Unexposed woods shall be Custom Grade Poplar, kiln dried unexposed woods come into contact with drawers, they shall be Birch or Maple,unselect.

D. All veneer core elements shall be clear straight-grain lumber of the best grade of the specified species as listed by the N.H.L.A. Lumber shall be free of any defects which might impair serviceability, aesthetics, and/or finish. Where veneer differs on two sides, veneers shall be of similar thickness, density, and characteristics to prevent any warpage. Veneer core elements shall also be according to the following, unless indicated on drawings or specifications:

1. Adhesives shall be water-resistant resin or approved equal; process shall be hot plate method using the following number of plys to achieve specified thickness:
   a. 1/4" (6 mm) overall thickness shall be of 3- ply veneer core construction.
   b. 3/8" (9 mm) overall thickness shall be of 5- ply veneer core construction.
   c. 1/2" (12 mm) overall thickness shall be of 5-ply veneer core construction.
   d. 3/4" (20 mm) overall thickness shall be of 7-ply veneer core construction.
   e. 1" (25 mm) overall thickness shall be of 9- ply veneer core construction.
2. Where burl panels are specified core must be crossbanded with Poplar prior to applying burl veneer.
3. Provide Douglas or Poplar Fir V-type solid edge trim on all exposed edges of plywood not designated to be surfaced by plastic laminate.
4. For Face Woods receiving transparent finishes, Species shall be as specified on drawings; faces shall be selected and approved in respect to cutting lengths, uniformity of color, figure, and grain character. Face veneers shall not contain open joints, face depressions, glue stain or other manufacturing irregularities.
5. Face Woods receiving opaque finishes shall have custom grade (face veneer) Birch or Poplar, selected, but otherwise shall have same specification as Plywood for Face Woods.
6. Unexposed woods shall be Birch, Poplar or Douglas Fir, rotary cut, Unselect, good one side, interior type plywood, one side Grade A and one side Grade B; Grade A faces shall not contain plugs, knots, pitch pockets, splits, rough grain or other open defects.
7. Wood for plastic lamination shall be minimum 3/4" (20 mm) Mahogany face core plywood, good one side.

E. All particle board shall be resin impregnated wood flakes of high density construction as manufactured by U.S. Plywood Corporation, Shasta Division, Redding, California, or approved equal and shall be 3/4" (20mm) minimum thickness, unless otherwise specified.

1. For Enameled Face Woods: High density particle board may be substituted for plywood panels, unless specified otherwise on drawings.
2. For Unexposed Woods: High density particle board may be substituted for plywood panels, unless specified otherwise on drawings.

F. All masonite shall be 1/8" (3 mm) thick tempered, as manufactured by Masonite Corporation, Chicago, Illinois, or an approved equal.

G. All panelwork materials shall be as indicated on drawings and specifications constructed of 3/4" (20 mm) plywood (or high density particleboard) with finish veneer front side, and veneer of similar thickness, density and characteristics back side, and hardwood edges. Finish veneer and hardwood edges shall be of species indicated on drawings and specifications using the type of veneer cut and type of match between individual veneer pieces as indicated.

H. All Millwork shall be finished as indicated on drawings and specifications. Transparent and Opaque Finishes shall match approved samples submitted. All plastic laminate finishes shall be of the quality, color and finish as indicated on the drawings and specifications.

I. Cabinet Hardware: Provide cabinet hardware and accessory materials associated with architectural cabinets, except for items specified in Division 8 Section "Door Hardware."

J. Clear Float Glass for Doors: ASTM C 1036, Type I, Class 1, Quality q3, 6 mm thick, unless otherwise indicated.

K. Furring, Blocking, Shims, and Hanging Strips: Fire-retardant-treated softwood lumber, kiln dried to less than 15 percent moisture content.

2.02 FINISHES

A. All millwork shall be finished in accordance with the drawings, specifications and the quality levels indicated in this section.

B. All finishes shall be in compliance with all Code and Regulatory Agency requirements for the Project and location within in the Project.

C. All finish materials shall be treated with flameretardant process where required by local code. Should flame-retardant process cause change in color and effect on finish material, Contractor shall notify the Architect prior.

D. Prior to finishing woods shall be filled, sanded, primed, and cleaned. When necessary for an even final finish color bleach woods prior to filling and sanding.

E. Transparent finishes on wood shall be full filled, stained to match the color required, and have a water, alcohol, and burn resistant finish, the degree of sheen to match the sample provided/approved.

F. All paint and other finish material shall be pure, unadulterated and best quality from specified manufacturer as indicated on the drawings and specifications.

2.03 FABRICATION

A. General: Complete fabrication, including assembly and finishing, before shipment to Project site to maximum extent possible. Where necessary for fitting at site, provide ample allowance for scribing, trimming, and fitting.

1. Assemble casings in plant except where limitations of access to place of installation require field assembly.
2. Shop-cut openings, to maximum extent possible. Smooth edges of cutouts and, where located in countertops and similar exposures, seal edges with a water-resistant coating.
3. Install glass to comply with FGMA "Glazing Manual." For glass in wood frames, secure glass with removable stops.
4. Fabricate all items with one inch long 45 degree corners.

B. Stained Wood Cabinets: As follows:

1. AWI Grade: Custom.
2. AWI Type of Cabinet Construction: As indicated.
3. Materials for Semiexposed Surfaces: Provide surface materials indicated below:
   i. Provide Architect's selections from stain manufacturer's full range of colors and finishes.
4. Colors, Patterns, and Finishes: Provide stain colors complying with the following:
   i. Provide Architect's selections from stain manufacturer's full range of colors and finishes.
5. Provide dust panels of 1/4-inch (6.4-mm) plywood above compartments and drawers except where located directly under tops.

C. Countertops: As follows:

1. Provide solid surface counter tops with intregal backsplashes – full length of top, undermounted with stainless teel sinks, refer to plumbing schedules, all properly braced and supported U.N.O
   i. Gibraltar with standard ‘Setback’ counter top edge condition. For sinks sizes as indicated. Sinks shall be ADA compliant.
   ii. Final finish colors will be selected by Architect at a later date from manufacturer’s full range.

D. Shelving:

1. Fabricate shelves spanning more than 30 inches between supports of full 1 inch thick stock.

PART 3 - EXECUTION

3.01 INSTALLATION

A. Preparation: Condition woodwork to average prevailing humidity conditions in installation areas, and examine and complete work as required, including back priming and removal of packing, before installing.

B. Install woodwork to comply with AWI Section 1700 for the same grade specified above for type of woodwork involved.
1. Install woodwork plumb, level, true, and straight with no distortions. Shim as required with concealed shims. Install to a tolerance of 1/8 inch in 96 inches (3 mm in 2400 mm).
2. Scribe and cut woodwork to fit adjoining work and refinish cut surfaces or repair

damaged finish at cuts.

C. Tops: Anchor securely to base units. Seal space between backsplash and wall.

D. Cabinet Hardware: Provide cabinet hardware and accessory materials associated with architectural cabinets.
1. Exposed Hardware Finishes: Provide satin stainless steel or aluminum finish.
2. For concealed hardware provide manufacturer's standard finish that complies with product class requirements of BHMA A156.9.
3. Provide hinges for 180 degree opening.
4. Drawer glides: Provide full extension side mount, ball bearing slide units with 75 pound loading capacity.
5. Door and Drawer Pulls: 3-1/2 inch long aluminum wire pulls.
6. Locks: Five pin tumbler dead bolt.

END OF SECTION 06 40 10

SECTION 06 65 00 – SIMULATED WOOD PRODUCTS

PART 1 – GENERAL

1.01 SUMMARY

A. Section includes:
   a. Simulated wood trim brackets and mouldings

1.02 REFERENCES

A. America Society for Testing and Materials (ASTM):
   a. ASTM E84-90 Standard Test Method for Surface Burning Characteristics of Building Materials
   b. ASTM G21 – Standard Practice for Determining Resistance of Synthetic Polymeric Materials to Fungi

1.03 RELATED WORK

A. Section 01 77 00 Closeout Procedures
B. Section 01 78 23 Operation and Maintenance Data
C. Section 07 92 00 Joint Sealers
D. Section 09 91 00 Painting

1.04 SUBMITTALS

A. Product Data: Submit manufacturer's descriptive literature, specifications, installation instructions and warranty.
B. Shop Drawings: Submit shop drawings showing layout, profiles and product components, including anchorage, accessories, finish colors and textures.
C. Samples: Submit selection and verification samples for finishes, colors and textures.

1.05 QUALITY ASSURANCE

A. Installer Qualifications: Installer shall be certified in the installation of simulated wood products from Architectural Elements or approved manufacturer.
B. Mock-Up: Install at project site a job mock-up using approved product from approved manufacturer. Mock-up shall represent finish color, size, texture, pattern and workmanship.

1.06 PROJECT CONDITIONS

A. Reference manufacturer for temperature requirements for all products.
B. All products shall be coordinated and field measurements taken and verified prior to fabrication. All measurements shall be recorded on shop drawings.

1.07 DELIVVERY, STORAGE & HANDLING

A. Comply with manufacturer's ordering instructions and lead time requirements to avoid construction delays.
B. Deliver material in manufacturer's original, unopened, undamaged containers with

identification labels intact.

C. Storage and Protection: store material protected from exposure to weather conditions and at temperature and humidity conditions recommended by manufacturer.

1.08 WARRANTY

A. Manufacturer shall be provide a 1 year warranty on all materials, quality of products, durability of products, and workmanship from date of substantial completion.

PART 2 – PRODUCTS

2.01 ACCEPTABLE MANUFACTURES

A. Specifications are based on products of named manufacturers. Manufacturers listed whose product meets or exceeds the specifications may be used on the Project. Other manufacturers must have a minimum of five (5) years experience manufacturing products meeting or exceeding the specifications and comply with Division 1 requirements regarding substitutions to be considered.
   a. Architectural Elements, Inc. (Basis of Specifications)
   b. Provide qualifications for substitutions

2.02 MATERIALS

A. Polyurethane
   a. Material: High-density polymer comparable to kild dried white pine millwork, with higher skin density.
   b. Moisture Resistance: Non-water absorbing
   c. Fire Rating: Fire rated Class 2
   d. Shop finish: Provide moulded units with manufacturer's standard primed finish to receive field applied coating.

B. Accessories
   a. Fasteners: Manufacturer provided trim screws or other fasteners only.
   b. Joint Compound: as recommended by manufacturer, paintable and resistant to exterior weather conditions.
   c. Adhesive: as recommended by manufacturer, paintable and resistant to exterior weather conditions.

C. Source Control
   a. All material to be provided by a single manufacturer.

PART 3 – EXECUTION

3.01 MANUFACTURE'S INSTRUCTIONS

A. Compliance: Comply with manufacturer's product data, including product technical bulletins, product catalog installation instructions and product carton instruction for installation.

3.02 EXAMINATIONS

A. Site Verification of Conditions: Verify substrate conditions, which have been previously installed in accordance with the plans and specifications. Confirm conditions are acceptable for product installation in accordance with manufacturer's instructions.

3.03 PREPARATIONS

A. Surface preparation: prepare substrate surface in accordance with manufacturer's instructions.

3.04 INSTALLATION

A. General: Follow manufacturer's instruction sheets.
B. Material: Fill holes with wood putty, spackle, or bondo and sand for finishing material.
C. Field Applied Coating: Finish with high quality exterior coating.
D. Related Products installation: Refer to other sections listed in Part 1 Related Sections for related products installation.

3.05 CLEANING

A. Remove all temporary coverings and protection of adjacent work areas. Repair or replace damaged installed products. Clean products in accordance with manufacturer's instructions prior to Owner's/Architect's acceptance. Remove and dispose of construction debris from project site.

3.06 PROTECTION

A. Protect installed product and finish surfaces from damage during construction.

3.07 FINISHING

A. Products to be surfaced by the manufacturer with two coats of paid applied, a barrier coat bonded directly to the polyurethane foam and a flat white primer coat.
B. Prepare surface of installed finish product, repair necessary areas to ensure a flat smooth surface free of any contaminates, especially any dirt, grease, or oils. Clean all surfaces with a mild water and ammonia solution prior to painting or as recommended by manufacturer.
C. Apply finish coats of paint – reference Section 09 91 00 or as recommended by manufacturer. Coordinate color selection with Owner/Architect.

END OF SECTION 06 65 00

SECTION 06 82 00 – GLASS FIBER REINFORCED PLASTIC

PART 1 - GENERAL

1.01 SUMMARY

A. This Section includes fiber reinforced plastic wall panels.

B. Submittals: Manufacturer's installation instructions, maintenance instructions and samples for color selection.

C. Fire Performance Characteristics: Tested in accordance with ASTM E 84.
1. Flame Spread: 25 or less.
2. Smoke Developed: 450 or less.

PART 2 - PRODUCTS

2.01 MANUFACTURERS

A. Subject to compliance with requirements, provide from following:
1. Crane Kemlite.
2. Lasco Panel Products.
3. Nudo Products.

2.02 MATERIALS

A. Glass Fiber Reinforced Plastic Sheet Wallcovering: Textured, chemical- and stain-resistant, high-impact, polyester or acrylic modified vinyl plastic sheets. Comply with ASTM D 256 for impact resistance and ASTM E 84 for flame spread and smoke developed characteristics.
1. Colors and Textures: Provide material that matches the Architect's samples.
2. Sheet Size: As indicated.
3. Sheet Thickness: 0.090 inch thick.

B. Trim: One piece plastic units, color to match panels.

C. Adhesives and fasteners: Type recommended by panel manufacturer to suit application.

PART 3 EXECUTION

3.01 INSTALLATION

A. Examine areas and conditions in which components will be installed.
1. Complete finishing operations, including painting, before beginning installation.
2. Do not proceed with installation until unsatisfactory conditions have been corrected.

B. Preparation: Prior to installation clean substrates to remove dust, debris, and loose particles.

C. Installation: Install plumb, level, and true to line without distortions. Do not use material with chips, cracks, voids, stains, or other defects that might be visible in the finished work.

D. Install retainers, mounting trim, and other accessories in accordance with the manufacturer's instructions.

E. Cleaning: Upon completion, clean panels and trim.

F. Remove surplus materials, rubbish, and debris resulting from installation upon completion of work and leave installation in neat, clean condition.

END OF SECTION 06 82 00

SECTION 07 11 13 - BITUMINOUS DAMPPROOFING

PART 1 - GENERAL

1.1 RELATED DOCUMENTS

A. Drawings and general provisions of the Contract, including General and Supplementary Conditions and Division 01 Specification Sections, apply to this Section.

1.2 SUMMARY

A. Section Includes:
   1. Cold-applied, emulsified-asphalt dampproofing.
   2. Protection course.

B. Apply dampproofing to surfaces indicated, including:
   1. Concrete foundation walls.
   2. Other locations indicated on drawings.

C. Related Requirements:
   1. Section 071326 "Self-Adhering Sheet Waterproofing" for waterproofing.

1.3 ACTION SUBMITTALS

A. Product Data: For each type of product.

1.4 FIELD CONDITIONS

A. Weather Limitations: Proceed with application only when existing and forecasted weather conditions permit dampproofing to be performed according to manufacturers' written instructions.

B. Ventilation: Provide adequate ventilation during application of dampproofing in enclosed spaces. Maintain ventilation until dampproofing has cured.

PART 2 - PRODUCTS

2.1 MATERIALS, GENERAL

A. Source Limitations: Obtain primary dampproofing materials and primers from single source from single manufacturer. Provide protection course, molded-sheet drainage panels and auxiliary materials recommended in writing by manufacturer of primary materials.

B. VOC Content: Products shall comply with VOC content limits of authorities having jurisdiction unless otherwise required.

C. Application Method: Based on substrate, use dampproofing designed for the following application method:
   1. For cast-in-place concrete substrates: Use roller, brush, or trowel, per manufacturer recommendations.

2. For concrete unit masonry: Use trowel.

2.2 COLD-APPLIED, EMULSIFIED-ASPHALT DAMPPROOFING

A. Manufacturers: Subject to compliance with requirements, available manufacturers offering products that may be incorporated into the Work include, but are not limited to, the following:
   1. BASF Construction Chemicals - Building Systems; Sonneborn Brand Products; Hydrocide 700.
   2. Henry Company; 789 Fibered Asphalt Emulsion Dampproofing.
   3. Karnak Corporation; No. 220 Emulsion Asbestos Free.
   4. Meadows, W. R., Inc.; Sealmastic Emulsion.

B. Trowel Coats: ASTM D 1227, Type II, Class 1, fibered.

C. Fibered Brush and Roller Coats: ASTM D 1227, Type II, Class 1.

2.3 AUXILIARY MATERIALS

A. General: Furnish auxiliary materials recommended in writing by dampproofing manufacturer for intended use and compatible with bituminous dampproofing.

B. Primer: As recommended in writing by manufacturer of dampproofing to be applied

C. Asphalt-Coated Glass Fabric: ASTM D 1668, Type I.

D. Patching Compound: Epoxy or latex-modified repair mortar or Asbestos-free fibered mastic of type recommended in writing by dampproofing manufacturer.

2.4 PROTECTION COURSE

A. Protection Course: As recommended by dampproofing manufacturer to suit project conditions.

PART 3 - EXECUTION

3.1 EXAMINATION

A. Examine substrates, areas, and conditions with Applicator present, for compliance with requirements for surface smoothness, surface moisture, and other conditions affecting performance of bituminous dampproofing work.

B. Proceed with application only after substrate construction and penetrating work have been completed and unsatisfactory conditions have been corrected.

3.2 PREPARATION

A. Mask or otherwise protect adjoining exposed surfaces from being stained, spotted, or coated with dampproofing. Prevent dampproofing materials from entering and clogging weep holes and drains.

B. Clean substrates of projections and substances detrimental to the dampproofing work; fill voids,

seal joints, and remove bond breakers if any, as recommended in writing by prime material manufacturer.

C. Apply patching compound to patch and fill tie holes, honeycombs, reveals, and other imperfections; cover with asphalt-coated glass fabric where required by manufacturer .

3.3 APPLICATION, GENERAL

A. Comply with manufacturer's written recommendations unless more stringent requirements are indicated or required by Project conditions to ensure satisfactory performance of Dampproofing.
   1. Apply primer to all substrates.
   2. Apply first coat of Dampproofing over primer.
   3. Embed fabric reinforcement into first ply of Dampproofing.
   4. Apply second coat of Dampproofing to required thickness.
   5. Apply additional coats if recommended by manufacturer or if required to achieve coverages indicated.
   6. Allow each coat of Dampproofing to cure per manufacturers written instructions before applying subsequent coats.
   7. Allow Dampproofing to cure prior to backfilling.

B. Where dampproofing footings and foundation walls, apply from finished-grade line to top of footing; extend over top of footing and down a minimum of 6 inches over outside face of footing.
   1. Extend dampproofing 12 inches onto intersecting walls and footings, but do not extend onto surfaces exposed to view when Project is completed.
   2. Install flashings and corner protection stripping at internal and external corners, changes in plane, construction joints, cracks, and where shown as "reinforced," by embedding an 8-inch- wide strip of asphalt-coated glass fabric in a heavy coat of dampproofing. Dampproofing coat for embedding fabric is in addition to other coats required.

3.4 INSTALLATION OF PROTECTION COURSE

A. Where indicated, install protection course over completed-and-cured dampproofing. Comply with dampproofing-material and protection-course manufacturers' written instructions for attaching protection course.
   1. Support protection course over cured coating with spot application of adhesive type recommended in writing by protection-board manufacturer.
   2. Install protection course after installation of dampproofing (while coating is tacky) to ensure adhesion and as recommended by the dampproofing manufacturer.

3.5 CLEANING

A. Clean spillage and soiling from adjacent construction using cleaning agents and procedures recommended in writing by manufacturer of affected construction.

END OF SECTION 07 11 13

SECTION 07 18 20 - PENETRATING FLOOR SEALER

PART 1 - GENERAL

1.01 RELATED DOCUMENTS

A. Drawings and general provisions of the Contract, including General and Supplementary Conditions and Division 1 Specification Sections, apply to this Section

1.02 SUMMARY

A. Application of penetrating concrete sealer to floors.

1.03 SUBMITTALS

A. General: Submit each item in this Article according to the Conditions of the Contract and Division 1 Specification Sections.

B. Product data:
1. Submit manufacturer's instructions for methods and application procedures.
2. Certification by sealer manufacturer that products supplied comply with local regulations controlling use of volatile organic compounds (VOCs).

C. Samples
1. Apply sealer to sample test area to illustrate lack of color change and lack of surface sheen.

PART 2 - PRODUCTS

2.01 MANUFACTURERS

A. Subject to compliance with requirements, provide products by one of the following:
1. Scotch-Clad Brand 6000H, as manufactured by 3M.
2. BSM 40 VOC, as manufactured by Chem-trete.
3. Klere-Seal 940-S, as manufactured by Pecora Corporation..
4. Exi-Guard CS2O, as manufactured by Aegis Coating Technologies.

2.02 MATERIALS

A. Silane/Siloxane based, penetrating, non-surface forming concrete sealer. Tint color as selected by owner/architect

.

PART 3 - EXECUTION

3.01 PREPARATION

A. Verify surfaces to receive penetrating sealer are clean, free of efflorescence, oil, grease, topical film forming curing agents, or other foreign matter detrimental to application.

B. Remove loose particles and foreign matter. Remove grease or oil with a solvent, effective

alkaline cleaner, or detergent as instructed by sealer manufacturer. Scrub surfaces with water.

C. Allow surfaces to dry before application.

3.02 APPLICATION

A. Apply sealer in accordance with manufacturer's instructions.

B. Apply in 2 continuous, uniform applications.

C. Protect adjacent surfaces not scheduled to receive sealer. If applied on unscheduled surfaces, remove immediately, by manufacturer approved method.

END OF SECTION 07 18 20

SECTION 07 21 00 - THERMAL INSULATION

PART 1 - GENERAL

1.01 SECTION INCLUDES

A. Thermal/acoustical insulation where shown on drawings or required.

B. Batt insulation used for thermal and sound insulation in stud walls, above lay-in ceiling panels, and where shown on drawings or required.

1.02 RELATED WORK

A. Section 07 11 13, Bituminous Dampproofing.

B. Section 09 51 00, Acoustical Ceilings: Installation of acoustical insulation above lay-in ceiling panels as specified.

C. Division 23 - Mechanical: Duct insulation

1.03 SUBMITTALS

A. Product Data:
1. Manufacturer's literature on each insulation type specified.
2. Manufacturer's installation instructions for each insulation type specified.

B. Samples: Six (6) inch x six (6) inch piece of rigid insulation for Architect's approval.

C. Certifications:
1. Manufacturer's certification of compatibility of rigid insulation with dampproofing mastic.
2. Manufacturer's affidavit that materials used in Project contains no asbestos.

1.04 COORDINATION

A. Furnish acoustical insulation to acoustical lay-in ceiling contractor for laying insulation above lay-in ceiling panel system specified.

PART 2 – PRODUCTS

2.01 APPROVED MANUFACTURERS / PRODUCTS

A. Specifications are based on any of the manufacturers listed below, with their product in parenthesis for the particular insulation application. Other manufacturers not listed must have a minimum of five (5) years experience manufacturing products meeting or exceeding the specifications and comply with Division 1 regarding substitutions to be considered.
1. Rigid Wall Insulation:
a. Extruded Polystyrene Foam Board:
1) Dow Chemical Co. (Styrofoam Cavitymate Plus)
2) Owens-Corning (Foamular CW25)

3) Pactiv Building Products (GreenGuard-SB)

2. Batt Thermal Insulation:
   a. Walls: For use in partition thermal applications.
      1) CertainTeed Corp. (AcoustaTherm)
      2) Guardian Fiberglass, Inc.(Thermal & Sound Control Batts)
      3) Johns-Manville (Thermal-SHIELD Thermal Insulation)
      4) Knauf (QuietTherm Insulation)
      5) Owens-Corning (Thermal Batt Insulation)
3. Batt Acoustical Insulation (Sound Attenuation):
   a. Walls / Ceilings: For use in partition acoustical applications and above lay-in ceilings as specified and where shown on drawings.
      1) CertainTeed Corp. (CertaPro AcoustaTherm)
      2) Guardian Fiberglass, Inc. (Thermal & Sound Control Batts)
      3) Johns-Manville (Sound-SHIELD Sound Control Batts)
      4) Knauf (QuietTherm Insulation)
      5) Owens-Corning (Above Ceiling – Sonobatts; Walls – Sound Batt)
      6) United States Gypsum Co. (Thermafiber Sound Attenuation Fire Blanket (SAFB) Insulation)

2.02 MATERIALS

A. Batt Insulation:
   1. Thermal Insulation:
      a. Type: ASTM C665, Type 1, unfaced
      b. Thickness / R-Values (minimum):
         1) 6-inches / R-19 where shown on drawings.
         2) 10-inches / R-30 where shown on drawings.
      c. Surface Burning Characteristics:
         1) Flame Spread: 25 or less
         2) Smoke Developed: 50 or less
   2. Acoustical (Sound Attenuation) Insulation:
      a. Type: ASTM C665, Type 1, unfaced
      b. Surface Burning Characteristics:
         1) Flame Spread: 25 or less
         2) Smoke Developed: 50 or less
      c. Thickness / R-Values (minimum):
         1) 3½-inches / R-13 where shown on drawings.
         2) 6-inches / R-19 where shown on drawings.

B. Sound Absorptive Material for Acoustical Ceilings below mechanical rooms
   1. Sound absorptive material for above acoustical ceilings, under floating floors and for around penetrations in walls and floor/ceiling assemblies shall be fiberglass or mineral fiber with a density of 1-1/2 lb/ft3. Thickness shall be as called out on the drawings. It shall be unfaced and supplied in semi-rigid board form. Flame spread and smoke developed index not to exceed 25, per ASTM E-84. Material shall be non-combustible per ASTM E136. Where large penetrations occur in fire-rated constructions, the use of semi-rigid fire-rated mineral wool safing may be required.

   2. Material to be laid directly on upper side of sound control ceiling, or between vibration isolation supports in floating floor constructions. For use in sealing penetrations of acoustically-rated partitions, pack material completely in space between penetrating

object and partition, leaving no voids or spaces.

3. The following are acceptable, subject to the above:
   a. Industrial Insulation Type 701 unfaced, from Owens Corning Fiberglas Corporation, Toledo, OH 800-438-7465
   b. Insul-Shield 150 from Johns Manville, Denver, CO 800-654-3103
   c. Insulation Board from Knauf Fiber Glass GmbH, Shelbyville, IN 317-398-4434

C. Cavity Insulation for Sound Rated Partitions

1. Cavity insulation for sound rated partitions may be fiberglass or mineral fiber with a density of 0.7 lb/ft3. Thickness shall be as called out on drawings. It shall be unfaced and supplied in batts. Flame spread and smoke developed index not to exceed 25, per ASTM E-84. Material shall be non-combustible per ASTM E136.
2. Material to be placed in the cavity friction-fit snug against the wallboard with no gaps between batts. Butt ends of batts together. Install behind electrical outlets, around structural obstructions, jambs, sills, etc.
3. The following are acceptable, subject to the above:
   a. Sound Attenuation Batt Insulation from Owens Corning Fiberglas Corporation, Toledo, OH 800-438-7465
   b. Noise Reducer Batts from CertainTeed, Valley Forge, PA 215-341- 7000
   c. Thermal Shield from Johns Manville, Denver, CO 800-654-3103
   d. Quiet Therm from Knauf Fiber Glass GmbH, Shelbyville, IN 317-398- 4434

D. Insulation for Mechanical Rooms

1. Sound absorptive insulation for mechanical rooms is used to reduce the amount of reverberant sound energy build-up that often occurs inside hard, sound reflective mechanical rooms.
2. Sound absorptive insulation for mechanical rooms shall be fiberglass or mineral fiber with a density of 3 lb/ft3. Insulation shall be 4” thick, unfaced and supplied in semi-rigid batts or rolls. Flame spread or smoke developed index not to exceed 25, per ASTM-84. Material shall be non-combustible per ASTM E136.
3. Material shall be secured to all wall and ceiling surfaces with fire-retardant adhesive and non-ferrous mechanical fasteners. Fasteners shall be 12 gauge perforated base with welded pins and speed clips. Apply fasteners 12” on center maximum. Peel and press type fasteners are not acceptable. The pins shall be cut off flush, washers shall be used, and installation made so that no gaps or loose edges occur in the insulation. Add a dab of adhesive to the cut off pin and washer to cover the sharp edge.
4. Exposed surface shall be a black mat finish to minimize fiber loss or deterioration. Where a single insulation can not achieve this, an alternate of 2” fiberglass combined with 2” duct liner board with a black mat finish may be used.
5. Approved Insulations:
   a. Insul-Shield (IS300 is available in 4” with black finish) from Johns Manville Mechanical Insulation Division, Denver, CO 800-654-3103
   b. Industrial Insulation Type 703 unfaced, from Owens Corning Fiberglas Corporation, Toledo, OH 419-248-8000
6. Approved Duct Liner Boards:
   a. Duct Liner Board from Owens Corning Fiberglas Corporation, Toledo, OH 419-248-8000
   b. Mat Faced Linacoustic Standard Fiberglass Liner Board from Johns Manville Mechanical Insulation Division, Denver, CO 800-654-3103
   c. Model PA Fiber Glass Absorber from Kinetics Noise Control, Dublin, OH 614-889-0480

7. Approved Mechanical Fasteners:
   a. Gemco Type IH-A from Goodloe E. Moore, Danville, IL 800-331-1164
   b. Eckoustic-Klip from Eckel Industries, Cambridge, MA 617-491-3221
   c. INC Stick-Pin from Industrial Noise Control, Addison, IL 312-620-1998
8. Approved Adhesives:
   a. 15-141 from King Company, St. Louis, MO 314-772-9953
   b. Tuffbond 2440 from Goodloe E. Moore, Danville, IL 800-331-1164
   c. INC C-700 from Industrial Noise Control, Addison, IL 312-620-1998

E. Fiberglass Board
1. Fiberglass board shall have a density of 6 or 7 lb/ft3. It shall be 1" – 4" thick, or as called out on the drawings. It shall be unfaced and supplied in rigid, continuous boards. Flame spread and smoke developed index not to exceed 25, per ASTM E-84. Material shall be non-combustible per ASTM E136.
2. The following are acceptable, subject to the above:
   a. Industrial Insulation Type 705 unfaced, from Owens Corning Fiberglas Corporation, Toledo, OH 419-248-8000
   b. Insulation Board from Knauf Fiber Glass GmbH, Shelbyville, IN 317- 398-4434
   c. Industrial Insulation Board IB 600 from CertainTeed, Valley Forge, PA 215-341-7000
   d. Type Insul-Shield I/S 600 from Johns Manville Mechanical Insulation Division, Denver, CO 800-654-3103

F. Miscellaneous Materials:
1. Mechanical Fasteners: Impaling clip of galvanized steel with washer retainer and clips, to be adhered or mechanically fastened to surface to receive insulation, length to suit insulation thickness and substrate, capable of securely and rigidly fastening insulation in place.
2. Adhesive: Type recommended by insulation manufacturer for application.

PART 3 – EXECUTION

3.01 INSTALLATION

A. Rigid Board Insulation:
1. Install board insulation in accordance with manufacturer's printed instructions.
2. Cut insulation to fit snugly around obstructions such as vents, pipe or conduit.
3. Install board insulation with joints tight and provide full coverage.

B. Batt Insulation (Thermal and Sound):
1. Walls:
   a. Insulation shall be friction fit between studs and provide full coverage where indicated on drawings.
   b. Insulation shall be tight within spaces in partitions, around cut openings, behind and around electrical and mechanical items within or behind partitions and tight to items passing through partitions.
   c. Wall areas above ceiling: At side wall insulation in ceiling cavity, install adhesive-mounted impaling devices with metal caps at 2 feet-0 inches vertically and at four (4) inches from each side of blankets horizontally. Install blankets with four (4) foot dimension running vertically on spikes, keeping blankets tight to exterior wall

without crushing into each other.

END OF SECTION 07 21 00

SECTION 07 25 00 – Weather Barrier

PART 1 – GENERAL

1.01 SUMMARY

A. Section Includes:
1. Weather Barrier Membrane
2. Seam Tape
3. Flashing
4. Fasteners

1.02 REFERENCES

A. ASTM International
1. ASTM C920; Standard Specification for Elastomeric Joint Sealants
2. ASTM C1193; Standard Guide for Use of Joint Sealants
3. ASTM D882; Test Method for Tensile Properties of Thin Plastic Sheeting
4. ASTM D1117; Standard Guide for Evaluating Non-woven Fabrics
5. ASTM E84; Test Method for Surface Burning Characteristics of Building Materials
6. ASTM E96; Test Method for Water Vapor Transmission of Materials
7. ASTM E1677; Specification for Air Retarder Material or System for Framed Building Walls
8. ASTM E2178; Test Method for Air Permeance of Building Materials
9. ASTM E2357; Standard Test Method for Determining Air Leakage of Air Barrier Assemblies

B. AATCC – American Association of Textile Chemists and Colorists
1. Test Method 127 Water Resistance: Hydrostatic Pressure Test

C. TAPPI
1. Test Method T-410; Grams of Paper and Paperboard (Weight per Unit Area)
2. Test Method T-460; Air Resistance (Gurley Hill Method)

1.03 SUBMITTALS

A. Refer to Section 01 33 00 Submittal Procedures

B. Product Data: Submit manufacturer current technical literature for each component.

C. Samples: Weather Barrier Membrane, minimum 8-1/2 inches by 11 inch.

D. Quality Assurance Submittals
1. Design Data, Test Reports: Provide manufacturer test reports indicating product

compliance with indicated requirements.

2. Manufacturer Instructions: Provide manufacturer's written installation instructions.
3. Manufacturer's Field Service Reports: Provide site reports from authorized field service representative, indicating observation of weather barrier assembly installation.

E. Closeout Submittals

1. Refer to Section [01 78 00 Closeout Submittals] [insert section number and title].
2. Weather Barrier Warranty: Manufacturer's executed warranty form with authorized signatures and endorsements indicating date of Substantial Completion.

1.04 QUALITY ASSURANCE

A. Qualifications

1. Installer shall have experience with installation of weather barrier assemblies under similar conditions.
2. Installation shall be in accordance with weather barrier manufacturer's installation guidelines and recommendations.
3. Source Limitations: Provide weather barrier and accessory materials produced by single manufacturer.

B. Mock-up

1. Install mock-up using approved weather barrier assembly including fasteners, flashing, tape and related accessories per manufacturer's current printed instructions and recommendations.
    i. Mock-up size: 10 feet by 10 feet.
    ii. Mock-up Substrate: Match wall assembly construction, including window opening.
    iii. Mock-up may not remain as part of the work.
2. Contact manufacturer's designated representative prior to weather barrier assembly installation, to perform required mock-up visual inspection and analysis as required for warranty.

C. Pre-installation Meeting

1. Refer to Section 01 31 19 Project Meetings.
2. Hold a pre-installation conference, two weeks prior to start of weather barrier installation. Attendees shall include Contractor, Architect, Engineer, Consultant, Installer, Owner's Representative, and Weather Barrier Manufacturer's Designated Representative.
3. Review all related project requirements and submittals, status of substrate work and preparation, areas of potential conflict and interface, availability of weather barrier assembly materials and components, installer's training requirements, equipment, facilities and scaffolding, and coordinate methods, procedures and sequencing requirements for full and proper installation, integration and protection.

1.05 DELIVERY, STORAGE, AND HANDLING

A. Refer to Section [01 60 00 Product Requirements] [insert section number and title].
B. Deliver weather barrier materials and components in manufacturer's original, unopened, undamaged containers with identification labels intact.
C. Store weather barrier materials as recommended by weather barrier manufacturer.

1.06 SITE CONDITIONS

A. Install dampproofing only when site weather conditions are acceptable per manufacturer's recommendations.

PART 2 – PRODUCTS

2.01 MANUFACTURER

A. Cold-Applied Asphalt Emulsion Liquid: Dampproofing compound of spraying (liquid) consistency, nonfibrated, meeting the requirements of ASTM D 1227, Type III; asbestos free.
   1. Acceptable products include the following:
      i. DuPont; 4417 Lancaster Pike, Chestnut Run Plaza 728, Wilmington, DE 19805;1-800-44-TYVEK; http://www.construction.tyvek.com

2.02 MATERIALS

A. Basis of Design: spunbonded polyolefin, non-woven, non-perforated, weather barrier is based upon DuPont™ Tyvek® CommercialWrap® and related assembly components.

B. Performance Characteristics:
   1. Air Penetration: 0.001 cfm/ft^2 at 75 Pa, when tested in accordance with ASTM E2178. Type I per ASTM E1677. ≤0.04 cfm/ft^2 at 75 Pa, when tested in accordance with ASTM E2357.
   2. Water Vapor Transmission: 28 perms, when tested in accordance with ASTM E96, Method B.
   3. Water Penetration Resistance: Minimum 280 cm when tested in accordance with AATCC Test Method 127.
   4. Basis Weight: Minimum 2.7 oz/yd^2, when tested in accordance with TAPPI Test Method T-410.
   5. Air Resistance: Air infiltration at >1500 seconds, when tested in accordance with TAPPI Test Method T-460.
   6. Tensile Strength: Minimum 38/35 lbs/in., when tested in accordance with ASTM D882, Method A.
   7. Tear Resistance: 12/10 lbs., when tested in accordance with ASTM D1117.
   8. Surface Burning Characteristics: Class A, when tested in accordance with ASTM E84. Flame Spread: 10, Smoke Developed: 10.

2.03 INSTALLATION ACCESSORIES

A. Seam Tape: As recommended by the weather barrier manufacturer.

B. Fasteners:
1. 1-5/8 inch rust resistant screw with 2-inch diameter plastic cap or manufacturer approved 1-1/4” or 2” metal gasketed washer

C. Sealants
1. Provide sealants that comply with ASTM C920, elastomeric polymer sealant to maintain watertight conditions.
2. Products: Sealants recommended by the weather barrier manufacturer.

D. Adhesives:
1. Provide adhesive recommended by weather barrier manufacturer.
2. Products: Adhesives recommend by the weather barrier manufacturer.

E. Primers:
1. Provide flashing manufacturer recommended primer to assist in adhesion between substrate and flashing.
2. Products: Primers recommended by the flashing manufacturer.

F. Flashing
1. Flexible membrane flashing materials for window openings and penetrations recommended by manufacturer.
2. Thru-Wall flashing membrane materials for flashing at changes in direction or elevation (shelf angles, foundations, etc.) and at transitions between different assembly materials.
3. Preformed Inside and Outside Corners and End Dams: Preformed three-dimensional shapes to complete the flashing system used in conjunction with Thru-Wall Flashing.

PART 3 – EXECUTION

3.01 EXAMINATION AND INSTALLATION

A. Verify substrate and surface conditions are in accordance with weather barrier manufacturer recommended tolerances prior to installation of weather barrier and accessories.

B. Install weather barrier over exterior face of exterior wall substrate in accordance with manufacturer recommendations.

C. Install weather barrier prior to installation of windows and doors.

D. Start weather barrier installation at a building corner, leaving 6-12 inches of weather barrier extended beyond corner to overlap.

E. Install weather barrier in a horizontal manner starting at the lower portion of the wall surface with subsequent layers installed in a shingling manner to overlap lower layers. Maintain weather barrier plumb and level.

F. Sill Plate Interface: Extend lower edge of weather barrier over sill plate interface 3-6 inches. Secure to foundation with elastomeric sealant as recommended by weather barrier manufacturer.

G. Window and Door Openings: Extend weather barrier completely over openings.

H. Overlap weather barrier
   1. Exterior corners: minimum 12 inches.
   2. Seams: minimum 6 inches.

I. Weather Barrier Attachment:
   1. Attach weather barrier to studs through exterior sheathing. Secure using weather barrier manufacturer recommend fasteners, space 12-18 inches vertically on center along stud line, and 24 inch on center, maximum horizontally.

J. Apply flashing to weather barrier membrane prior to installing cladding anchors.

3.02 SEAMING

A. Seal seams of weather barrier with seam tape at all vertical and horizontal overlapping seams.

B. Seal any tears or cuts as recommended by weather barrier manufacturer.

3.03 FLASHING

A. Cut flexible flashing a minimum of 12 inches longer than width of sill rough opening.

B. Cover horizontal sill by aligning flexible flashing edge with inside edge of sill. Adhere to rough opening across sill and up jambs a minimum of 6 inches. Secure flashing tightly into corners by working in along the sill before adhering up the jambs.

C. Fan flexible flashing at bottom corners onto face of wall. Firmly press in place. Mechanically fasten fanned edges.

D. Apply 9-inch wide strips of flashing at jambs. Align flashing with interior edge of jamb framing. Start flashing at head of opening and lap sill flashing down to the sill.

E. Spray-apply primer to top 6 inches of jambs and exposed sheathing.

F. Install flexible flashing at opening head using same installation procedures used at sill. Overlap jamb flashing a minimum of 2 inches.

G. Coordinate flashing with window installation.

H. On exterior, install backer-rod in joint between window frame and flashed rough framing. Apply sealant at jambs and head, leaving sill unsealed. Apply sealants in accordance with sealant manufacturer's instructions and ASTM C1193.

I. Position weather barrier head flap across head flashing. Adhere using flashing over the 45-degree seams.

J. Tape top of window in accordance with manufacturer recommendations.

K. On interior, install backer rod in joint between frame of window and flashed rough framing. Apply sealant around entire window to create air seal. Apply sealant in accordance with sealant manufacturer's instructions and ASTM C1193.

L. At thru-wall flashing at Base of Wall:
1. Overlap thru-wall flashing with weather barrier by 6-inches.
2. Mechanically fasten bottom of weather barrier through top of thru-wall flashing.
3. Seal vertical and horizontal seams with tape or sealing membrane.

M. At thru-wall flashing at Window Head
1. Cut flap in weather barrier at window head.
2. Prime exposed sheathing.
3. Install lintel as required. Verify end dams extend 4 inches minimum beyond opening.
4. Install end dams bedded in sealant.
5. Adhere 2 inches minimum thru-wall flashing to wall sheathing. Overlap lintel with thru-wall flashing and extend ¼ inch minimum beyond outside edge of lintel to form drip edge.
6. Apply sealant along thru-wall flashing edges.
7. Fold weather barrier flap back into place and tape bottom edge to thru-wall flashing.
8. Tape diagonal cuts of weather barrier.
9. Secure weather barrier flap with fasteners.

3.04 FIELD QUALITY CONTROL

A. Before concealing dampproofing, notify the Architect that the dampproofing is ready for inspection.

B. Manufacturer's designated repetitive shall be notified as required for observations of weather barrier assembly installation.

3.05 PROTECTION AND CLEANING

A. Take measures required to protect completed installation.

END OF SECTION 07 25 00

SECTION 07 26 16 - BELOW-GRADE VAPOR RETARDER

PART 1 – GENERAL

1.01 SUMMARY

A. This Section includes low permeance vapor retarders for installation under concrete slabs on grade.

1.02 SUBMITTALS

A. Product Data: Include manufacturer's written instructions for installation, seaming, technical data, and tested physical and performance properties of vapor retarder.

B. Shop Drawings: Show locations and extent of vapor retarders. Include details for penetrations and terminations, tie-ins with adjoining waterproofing, other termination conditions, and repairs.

C. Product test reports.

1.03 QUALITY ASSURANCE

A. Installer Qualifications: A qualified installer, approved by manufacturer to install manufacturer's products; and who is eligible to receive warranty specified.

B. Pre-installation Conference: Conduct conference at Project site.

1.04 PROJECT CONDITIONS

A. Environmental Conditions: Apply vapor retarders within range of ambient and substrate temperatures recommended by manufacturer.

1.05 WARRANTY

A. Special Warranty: Manufacturer's standard form, signed by manufacturer and Installer, and agreeing to repair or replace vapor retarder that does not retard vapor for a period of 5 years after date of Substantial Completion, and o repair consequential damage to flooring and structure.

PART 2 – PRODUCTS

2.01 VAPOR RETARDER

A. Vapor Retarder: ASTM E 1745, Class C, manufactured specifically for long term below slab use. Vapor retarder shall have a permeance of no more than 0.04 [grains/(ft²*hr*in.Hg)] per ASTM E 96 or F 1249. Vapor retarder shall maintain permeance after mandatory conditioning tests per ASTM E 154 Sections 8,11,12,13. Retarder to be no less than 10 mils thick.

1. Available Product: Subject to compliance with requirements, a product that may be incorporated into the Work includes, but is not limited to:
   a. Stego Wrap by Stego Industries.

2.02 AUXILIARY MATERIALS

A. Seam tape, pipe boots, detail strips with vapor permeance not less than the membrane, as require by manufacturer.

PART 3 – EXECUTION

3.01 SURFACE PREPARATION

A. Clean, prepare, and treat substrates according to manufacturer's written instructions. Level and tamp or roll substrate.

B. Unroll vapor retarder with longest dimension parallel with direction of pour.

C. Lap vapor retarder over footings and seal to foundation walls.

D. Overlap or butt joints and seal joints as required by manufacturer.

E. Seal membrane penetrations as required by manufacturer.

F. Repair tears, voids, and lapped seams in vapor retarder not complying with requirements. Slit and flatten fishmouths and blisters. Patch with vapor retarder and tape extending beyond repaired areas in all directions.

G. No penetration of vapor retarder is allowed except for reinforcing steel and permanent utilities, which are to be sealed.

3.02 PROTECTION

A. Protect vapor retarder from damage during installation of reinforcing and utilities.

B. Protect vapor retarder from damage and wear during remainder of construction period.

END OF SECTION 07 26 16

SECTION 07 41 13 - METAL ROOF PANELS

PART 1 – GENERAL

1.01 SUMMARY

A. Furnish and install standing seam roof.

1.02 SUBMITTALS

A. Submit product data and shop drawings. Show sections and details of roof with substrate and structure, eave flashing and roof edge.

B. Submit samples of specified color for verification.

C. Submit a small scale roof plan identifying corner and perimeter areas and the increased fastening pattern as per manufacturer's instructions at these locations.

D. Submit wind uplift pressure criteria utilizing ASCE 7.

1.03 REFERENCES:

A. American Society for Testing and Materials.

B. Factory Mutual Global.

C. National Roofing Contractors Association.

D. Sheet Metal and Air Conditioning Contractors Association.

E. American National Standards Institute/Single Ply Roofing Institute (ANSI/SPRI)

F. Manufacturer's Printed Instructions.

PART 2 – PRODUCTS

2.01 MANUFACTURER

A. Manufacturer: Berridge "Zee Lock Double Lock Seamed" 24 GA or approved equal.
   1. All materials of the same type shall be products of the same manufacturer.
   2. All prefinished sheet metal materials exposed to view concurrently shall be from the same prefinished coil stock finish run, batch or lot.
   3. All trim and accessories shall be furnished by the same manufacturer

2.02 MATERIALS

A. Integral Standing Seam Roof System: Meet Code Wind Load for UL Class and secure using FM LPDS 1-31 requirements. Design for wind uplift pressure

criteria utilizing ASCE 7.

1. Material: Galvalume, 24 gauge unless otherwise indicated.
2. Finishes:
   a. Finished Metal shall be Coil-coated 20-year warranty fluoropolymer finish containing at least 70% Kynar 500 of at least 1 mil total dry film thickness. Color as selected by Architect from manufacturer's full line of available colors and textures.
   b. Unfinished Metal shall be Grade C Galvalume ASTM A792-86, AZ 55, "Satin Finish".
3. Panels: Factory-formed; striated, width of 16 inches, with minimum 2-inch high continuous interlocking seam mechanically roll formed in field.
4. Fabricate panels' full length from ridge to eave.

2.03 METAL ROOF ACCESSORIES

A. Provide additional and accessory products by the same manufacturer, where possible. Provide only products acceptable to the manufacturer of the roof panels.

B. Panel Clip Screw for Fastening to Purlins: Manufacturer's standard.

C. Roof Panel Clips: Underwriters Laboratory Class 150 and Factory Mutual I-150; Underwriters Laboratories Classified and bearing UL Label; as recommended and supplied by panel manufacturer.

D. Primer: Asphalt Type, ASTM D41.

E. Underlayment Fastener: Stainless steel nails, ring shank with plastic caps.

F. Metal Closures and Trim: Prefinished aluminum sheet; match roof panels.

G. Accessory Screws: Stainless steel Size and type as provided by panel manufacturer for each use.

H. Pop-Rivets: Stainless steel, series 42 or 44, as required for the application.

I. Sealant: Color-coordinated primer-less urethane, or high-grade, non-drying butyl, as supplied by panel manufacturer.

J. Sealant Tape: 1/8 inch x 3/4 inch butyl tape as supplied by panel manufacturer.

K. Waterproofing Membrane Underlay: Tamko – Metal and Tile Underlayment; Grace – Vycor 40.

PART 3 – EXECUTION

3.01 METAL ROOF FLASHING

A. Install eave flashing before panel installation. Secure all drip and rake edges at 6” o.c. with two staggered rows.

B. Install manufacturer-approved flashing materials at eaves. Do not use "J-clips".

3.02 ROOF PANELS

A. Follow manufacturer's instructions and recommendations to produce a weathertight installation.

B. Install panels in continuous lengths without end-to-end seams.

C. Seam clips: Install at 16 inches o.c., or as otherwise recommended by the system manufacturer, whichever is more stringent.

D. Provide for 1/2-inch movement at upslope terminations and at least 1-inch clearance around penetrations. Hem bottom panel edges 1-inch and hook onto metal edge. Do not use "J-clip" flashing details.

E. Trim: Install in complete assemblies along with the light metal coping cap at brick walls; include flashings.

F. Carefully apply concealed sealant beads and sealant tape at all penetrations, intersections and other locations (but not at standing seams) necessary for waterproof installation.

3.05 WARRANTY

A. Provide 20-year weather-tightness warranty from Manufacturer.
   a. Coordinate with manufacturer for all onsite inspections that may be required per the terms of the warranty.

B. Provide 2-year installation workmanship warranty.
   a. Coordinate with manufacturer for all onsite inspections that may be required per the terms of the warranty.

3.06 CLEANING AND PROTECTION

A. Clean surfaces promptly after installation.

B. Use methods and materials for cleaning recommended by manufacturer. Follow manufacturer's instructions and recommendations so methods and materials do not void finish warranty.

C. Protect work so roofing will be undamaged at Final Completion.

D. Replace damaged materials.

END OF SECTION 07 41 13

SECTION 07 42 13 – METAL WALL PANELS

PART 1 - GENERAL

1.01 SECTION INCLUDES

A. Foamed-in-Place steel, insulated metal wall panels

B. Accessories including fasteners and perimeter trim

1.02 REFERENCES

A. American Architectural Manufacturers Association (AAMA)

1. AAMA 501.1: Standard Test Method for Metal Curtain Walls for water penetration using Dynamic Pressure
2. AAMA 501.2: Quality Assurance and Diagnostic Water Leakage Field Check of Installed Storefronts, Curtain Walls and Sloped Glazing Systems
3. AAMA 508: Voluntary Test Method and Specification for Pressure-Equalized Rain-Screen Wall Cladding System
4. AAMA 621: Voluntary Specification for High Performance Organic Coatings on Coil Coated Architectural Hot Dipped Galvanized (HDG) and Zinc-Aluminum Coated Steel Substrates
6. AAMA 809.2: Voluntary Specification for Non-Drying Sealants

B. American Society of Civil Engineers (ASCE)

1. ASCE 7: Minimum Design Loads for Buildings and Other Structures

C. ASTM International

1. ASTM A653: Standard Specification for Steel Sheet, Zinc-Coated (Galvanized) or Zinc-Iron Alloy-Coated (Galvannealed) by the Hot-Dip Process
2. ASTM A755: Standard Specification for Steel Sheet, Metallic Coated by the Hot-Dip Process and Prepainted by the Coil-Coating Process for Exterior Exposed Building Products
3. ASTM A792: Standard Specification for Steel Sheet, 55 percent Aluminum-Zinc Alloy-Coated by the Hot–Dip Process
4. ASTM A924: Standard Specification for General Requirements for Steel Sheet, Metallic-Coated by the Hot-Dip Process
5. ASTM B117: Standard Practice for Operating Salt Spray (Fog) Apparatus
6. ASTM B209: Standard Specification for Aluminum and Aluminum-Alloy Sheet and Plate
7. ASTM C209: Standard Test Methods for Cellulosic Fiber Insulating Board
8. ASTM C272: Standard Test Method for Water Absorption of Core Materials for Sandwich Constructions
9. ASTM C591: Standard Specification for Unfaced Preformed Rigid Cellular Polyisocyanurate Thermal Insulation

10. ASTM C920: Standard Specification for Elastomeric Joint Sealants
11. ASTM C1363: Standard Test Method for Thermal Performance of Building Materials and Envelope Assemblies by Means of a Hot Box Apparatus
12. ASTM D522: Standard Test Methods for Mandrel Bend Test of Attached Organic Coatings
13. ASTM D523: Standard Test Method for Specular Gloss
14. ASTM D714: Standard Test Method for Evaluating Degree of Blistering of Paints
15. ASTM D968: Standard Test Methods for Abrasion Resistance of Organic Coatings by Falling Abrasive
16. ASTM D1308: Standard Test Method for Effect of Household Chemicals on Clear and Pigmented Organic Finishes
17. ASTM D1929: Standard Test Method for Determining Ignition Temperature of Plastics
18. ASTM D2244: Standard practice for Calculation of Color Tolerances and Color Differences from Instrumentally Measured Color Coordinates
19. ASTM D2247: Standard Practice for Testing Water Resistance of Coatings in 100 percent Relative Humidity
20. ASTM D2794: Standard Test Method for Resistance of Organic Coatings to the Effects of Rapid Deformation (Impact)
21. ASTM D3273: Standard Test Method for Resistance to Growth of Mold on the Surface of Interior Coatings in an Environmental Chamber.
22. ASTM D3359: Standard Test Methods for Measuring Adhesion by Tape Test
23. ASTM D3363: Standard Test Method for Film Hardness by Pencil Test
24. ASTM D4145: Standard Test Method for Coating Flexibility of Prepainted Sheet
25. ASTM D4214: Standard Test Methods for Evaluating the Degree of Chalking of Exterior Paint Films
26. ASTM D5894: Standard Practice for Cyclic Salt Fog/UV Exposure of Painted Metal, (Alternating Exposures in a Fog/Dry Cabinet and a UV Condensation Cabinet)
27. ASTM E72: Standard Test Methods of Conducting Strength Tests of Panels for Building Construction
28. ASTM E84: Standard Test Method for Surface Burning Characteristics of Building Materials
29. ASTM E283: Standard Test Method for Determining Rate of Air Leakage Through Exterior Windows, Curtain Walls, and Doors Under Specified Pressure Differences Across the Specimen
30. ASTM E330: Standard Test Method for Structural Performance of Exterior Windows, Doors, Skylights, Curtain Walls by Uniform Static Air pressure Difference
31. ASTM E331: Standard Test Method for Water Penetration of Exterior Windows, Skylights, Doors, and Curtain Walls by Uniform Static Air Pressure Difference
32. ASTM E1105: Standard Test Method for Field Determination of Water Penetration of Installed Exterior Windows, Skylights, Doors, and Curtain Walls by Uniform or Cyclic Static Air Pressure Difference
33. ASTM E1233: Standard Test Method for Structural Performance of Exterior Windows, Doors, Skylights, and Curtain Walls by Cyclic Air Pressure Differential
34. ASTM E1354: Standard Test Method for Heat and Visble Smoke Release Rates
35. ASTM F1642: Standard Test Method for Glazing Systems Subject to Airblast Loadings
36. ASTM G153: Standard Practice for Operating Enclosed Carbon Arc Light Apparatus for Exposure of Nonmetallic Materials
37. ASTM G154: Standard Practice for Operating Fluorescent Light Apparatus for UV Exposure of Nonmetallic Materials

D. FM Global

1. FM 4880: Class 1 Fire Rating of Insulated Wall or Wall and Roof/Ceiling Panels, Interior Finish Materials or Coatings, and Exterior Wall Systems
2. FM 4881: Approval Standard for Class 1 Exterior Wall Systems
3. FM 4882: Approval Standard for Class 1 Interior Wall and Ceiling Materials or Systems for Smoke Sensitive Occupancies

E. Governmental Agencies

1. General Services Administration (GSA): GSA-TS01 - US General Services Administration Standard Test Method for Glazing and Window Systems Subject to Dynamic Overpressure Loadings
2. Department of Defense (DoD): UFC 4-010-01 - Unified Facilities Criteria (UFC) DoD Minimum Antiterrorism Standards for Buildings.
3. Department of Veterans Affairs (VA): Physical Security Design Manual for VA Facilities (Life-Safety Protected).

F. International Building Code (IBC): current edition

G. National Fire Protection Association (NFPA)

1. NFPA 259: Standard Test Method for Potential Heat of Building Materials
2. NFPA 285: Standard Fire Test Method for Evaluation of Fire Propagation Characteristics of Exterior Non-Load-bearing Wall Assemblies Containing Combustible Components

H. Underwriters Laboratories (UL)

1. ANSI/UL 263: Fire Resistance Ratings, Certifications Directory

I. International Organization for Standardization (ISO)

1. ISO 14025: Environmental Labels and Declarations

1.03 ADMINISTRATIVE REQUIREMENTS

A. Pre-installation meeting: Conduct a pre-installation meeting at the job site attended by Owner, Architect, Manufacturer's Technical Representative, Panel Installer, and Contractors of related trades. Coordinate structural support requirements in relation to insulated wall panel system, installation of any separate air/water barriers, treatment of fenestration, and other requirements specific to the project.

1.04 SUBMITTALS

A. Refer to Section [01 33 00 Submittal Procedures]

B. Product Data: Submit manufacturer current technical literature for each type of product.

C. Shop Drawings: Submit detailed drawings showing:

1. Profile
2. Gauge of both exterior and interior sheet
3. Location, layout and dimensions of panels
4. Location and type of fasteners
5. Shape and method of attachment of all trim
6. Locations and type of sealants
7. Installation sequence
8. Coordination Drawings: Provide elevation drawings and building sections which show panels in relationship to required locations for structural support. Include panel details and details showing attachment to structural support.
9. Other details as may be required for a weathertight installation

D. Panel Analysis: Provide panel calculations to verify panels will withstand the design wind loads indicated without detrimental effects or deflection exceeding the specified limit. Include effects of thermal differential between the exterior and interior panel facings and resistance to fastener pullout.

E. Samples: Provide nominal 3 x 5 inch of each color indicated. [24" x 10" long minimum].

F. Health and Wellness

1. Red List Free – Foam core system must be free of Halogenated Flame Retardants (HFRs) and may not contain any chemical ingredients on the ILFI Declare Red List at levels great than or equal to 100 ppm (0.01%). Complete panel (as installed) complies when configured with metal facers using approved/labeled PVDF coating system.

2. ZERO VOC's – Product must be 100% zero VOC as installed on the building as verified by 3rd party certification.

3. Material Ingredient Transparency – manufacturer has provided 3rd party verification on all chemical ingredients at levels great than or equal to 100 ppm (0.01%).

G. Manufactured with Renewable Energy

1. Product must be manufactured in a location utilizing at least 50% of its energy sourced from renewable supply.

H. Science based target to reduce embodied carbon

1. Scope 1 + 2: 33% absolute emissions reduction by 2025

2. Scope 3: 10% intensity emissions reduction per $ value added by 2025

I. LEED 2009 Submittals:

1. Energy and Atmosphere (EA)

a. Energy Analysis for Credit EA 1: Demonstrating percentage of performance improvement compared with the baseline building performance rating.

2. Material and Resources (MR)

a. Product Certificates for Credit MR 4: For products having recycled content, documentation indicating percentages by weight of post-consumer and pre-consumer recycled content.
b. Product Certificates for Credit MR 5: For products and materials required to comply with requirements for regionally manufactured materials. Include statement indicating cost, location of manufacturer, and distance to Project for each regionally manufactured material.

3. Indoor Environmental Quality (IEQ)

a. Product Data for Credit IEQ 4.1: For sealants including printed statement of VOC content
b. Product Data for Credit IEQ 4.2: For paints and coatings, including printed statement of VOC content

4. Innovation in Design (ID)

a. [Documentation for Credit ID 1 : [Include specific requirements related to documenting credit.]

5. Pilot Credit 61: Material Disclosure and Assessment

a. Environmental Product Declaration

J. LEED V4 Submittals:

1. Energy and Atmosphere

a. Energy Analysis: Demonstrating percentage of performance improvement compared with the baseline building performance rating.

2. Materials and resources

a. Building Life-Cycle Impact Reduction

3. Building product disclosure and optimization

a. Environmental Product Declaration (EPD) conforming to ISO 14025, 14040, 14044, EN 15804 or ISO 21930 with a Cradle to Grave

b. Sourcing of Raw Materials: publically released reports that comply with LEED requirements for raw material source and extraction reporting

c. Material Ingredients: Publically produced, complete Health Product Declaration with full disclosure of know hazards in compliance with the Health Product Declaration open Standards

4. Indoor Environmental Quality

a. Low Emitting Materials: Compliance sheets indicating adhesives and gasket are within the published VOC emissions thresholds

5. Innovation in Design

a. [Documentation for Credit: [Include specific requirements related to documenting credit.]

K. Miscellaneous Certifications:

1. Submit documentation certifying that products comply with provisions of the "Buy American Act" Title 41 of the US Code Sub-sections 10a through 10d.
2. Submit documentation that products have been certified in accordance with ISO 14025.

L. Quality Assurance Submittals

1. Design Data, Test Reports: Provide manufacturer test reports indicating product compliance with requirements.

a. Provide test report from nationally recognized testing agency to demonstrate compliance with IBC Section 1403.2.

2. Manufacturer Erection Instructions: Provide manufacturer's written installation instructions including proper material storage, material handling, and maintenance instructions.

1.05 QUALITY ASSURANCE

A. Manufacturer Qualifications:

1. Manufacturer shall have a minimum of five (5) years experience in the production of insulated metal wall panels. Manufacturer shall demonstrate past experience with examples of projects of similar type and exposure.
2. Manufacturer to be registered with a Program Operator with a Certified Environmental Product Declaration, in conformance with ISO 14025, for Insulated Metal Panels.

B. Installer Qualifications:

1. Installer shall be authorized by the manufacturer and the work shall be supervised by a person having successfully completed a manufacturer training seminar regarding proper installation of the specified product.

1.06 DELIVERY, STORAGE AND HANDLING

A. Refer to Section [01 60 00 Product Requirements]

B. Deliver panel materials and components in manufacturer's original, unopened, undamaged packaging with identification labels intact.

C. Store wall panel materials on dry, level, firm, and clean surface. Stack no more than two bundles high. Elevate one end of bundle to allow moisture run-off, cover and ventilate to allow air to circulate and moisture to escape.

1.07 WARRANTY

A. Limited Warranty: Standard form in which manufacturer agrees to repair or replace items that fail in materials or workmanship within specified warranty period. The items covered by the warranty include structural performance including bond integrity, deflection and buckling.

1. Warranty Period: Two (2) years from date of Substantial Completion, or 2 years and 3 months from the date of shipment from manufacturer's plant, whichever occurs first.

B. Finish Warranty: Standard form in which manufacturer agrees to repair or replace metal panels that evidence deterioration of fluoropolymer finish, including flaking or peeling from approved primed metal substrate, chalk in excess of 8 when tested in accordance with ASTM D4214, Method A, and /or color fading in excess of 5 ΔE Hunter units on panels when tested in accordance with ASTM D2244.

1. Warranty Period: Twenty (20) years from date of Substantial Completion, or 20 years and 3 months from the date of shipment from manufacturer's plant, whichever occurs first.

C. Thermal Warranty: Standard form in which manufacturer agrees to repair or replace panels that exhibit greater than 10% reduction from published material R-value at time of manufacture as measured in accordance with ASTM C518 within specified warranty period.

1. Warranty Period: Thirty (30) years from date of Substantial Completion or 30 years and 3 months from date of shipment from manufacturer's plant, whichever occurs first.

PART 2 - PRODUCTS

2.01 MANUFACTURER

A. Benchmark by Kingspan; a division of Kingspan Insulated Panels, Inc. (www.kingspanpanels.us)

1. James Fanning (214)-326-3695

B. Basis of Design: [Designwall 4000 Flat Panel]

C. Substitution Limitations:

1. Submit written request for approval of substitutions to the Architect [a minimum of [14] days prior to the date for receipt of bids] [Insert time period]. Include the following information:

a. Name of the materials and description of the proposed substitute.
b. Drawings, cut sheets, performance and test data.
c. List of projects of similar scope and photographs of existing installations.
d. Test reports indicating compliance with the performance criteria.

e. Other information necessary for evaluation.

2. After evaluation by Architect, approval will be issued via addendum. No verbal approval will be given.
3. Substitutions following award of contract are not allowed except as stipulated in Division 01 – General Requirements.

2.02 EXTERIOR WALL PANELS

A. Design Criteria:

1. Wind Loads: [As indicated on Drawings] [Insert positive and negative loads (psf) for Components and Cladding Zones 4 and 5].
2. Deflection criteria shall be [L/180] [insert project specific deflection criteria].

B. Performance Criteria:

1. Structural Test:

f. Static: Structural performance shall be verifiable by witnessed structural testing for simulated wind loads in accordance with ASTM E72 or ASTM E330.
g. Cyclic: Tested constructions meet the approval criteria of FM 4881 when installed as specified in the listing.

2. Bond Strength: No metal primer interface corrosion and/or delamination shall occur after 1000 hours at 135 degrees F and 100 percent relative humidity. No delamination shall occur after 2-1/2 hours in a 2 psi 217 degrees F autoclave.
3. Pressure Equalization: The typical horizontal and vertical joint system shall exhibit rapid pressure equalization when subjected to cyclic external pressure fluctuations applied in accordance with ASTM E1233. Panels shall be successfully tested using procedure similar to AAMA 508; modified as appropriate for insulated foam core panels with an integral vapor barrier. The liner sheet of the panel shall be considered as the imperfect air barrier during the test procedure.
4. Water Penetration:

a. Dynamic: There shall be no uncontrolled water leakage when tested in accordance with AAMA 501.1 at a pressure differential of 15 psf. Test shall be conducted with the liner side seal broken.
b. Static: No uncontrolled water leakage, when tested in accordance with ASTM E331 at a [6.24 psf] [20 psf] [70 psf] pressure differential.
c. Static – 2 hour duration: Panel system shall demonstrate no water penetration when tested in accordance with ASTM E331 at 6.24 psf pressure differential for a two (2) hour duration to satisfy International Building Code, Section 1403.2.

5. Air Infiltration: Air infiltration through the panel shall not exceed 0.01 cfm/sf at [6.24 psf] [20 psf] air pressure differential when tested in accordance with ASTM E283.
6. Water Absorption: There shall be no more than 0.075 pcf water absorption based on 3 x 3 inch foamed-in-place insulated metal wall panel samples subjected to a 24-hour full water submersion in accordance with ASTM C272.

7. Thermal Performance: QuadCore polyisocyanurate (POLYISO) core panels shall provide the following R-Values as tested in accordance with ASTM C518 at 75°F mean temperature or as determined from thermal modeling using Therm 5.2 software developed by Lawrence Berkley Laboratories:

    a. 2 inch thick Flat: R-16
    b. 2.5 inch thick Flat: R-20
    c. 3 inch thick Flat: R-24
    d. 4 inch thick Flat: R-32

8. Seismic Performance: Comply with ASCE 7, Section 13, "Seismic Design Requirements for Non-Structural Components". Panels shall be hard-fastened to structure along one edge only such that lateral slippage between panels can occur in the event of seismic activity.
9. Fire Test Response Characteristics: Steel-faced panels with QuadCore polyisocyanurate (POLYISO) core shall fully comply with Chapter 26 of International Building Code regarding the use of Foam Plastic. The following tests shall be available upon request for submission to the Authority Having Jurisdiction:

    a. FM 4880: Class I rated per FM Global, panels are approved for use without a thermal barrier and do not create a requirement for automatic sprinkler protection.
    b. FM 4882: Class I rated per FM Global for smoke sensitive occupancies.
    c. ASTM E84 Surface Burning Characteristics; Finished panel shall have a Flame Spread less than or equal to 25, and Smoke Developed less than or equal to 50.
    d. NFPA 285 Intermediate Scale Multi-story Fire Evaluation; successfully passed acceptance criteria.
    e. ASTM D1929 Minimum Flash and Self Ignition; established for foam core.
    f. NFPA 259 Potential Heat Content; established for foam core.

10. Insulating Core: QuadCore polyisocyanurate (POLYISO) foamed-in-place core, ASTM C591 Type IV, CFC and HCFC free, Halogenated Flame Retardant (HFR) free, compliant with Montreal Protocol and Clean Air Act, with the following minimum physical properties:

    a. Density Nominal: 2.2 to 2.8 pcf
    b. Shear Strength: 20 psi
    c. Compressive Strength: 25 psi
    d. Closed Cell Content: 90 percent
    e. FM Global approvals: Class 1 for smoke sensitive occupancies per FM 4880/4882
    f. Surface burning characteristics of unfaced foam core when tested in accordance with ASTM E84:

        1) Flame Spread: 25 or less
        2) Smoke Developed: 50 or less

    g. Ignition characteristics when tested in accordance with ASTM D1929:

        1) Self-Ignition: 968 degrees F, minimum

        2) Flash Ignition: 806 degrees F, minimum

    h. Potential Heat Content per NFPA 259: 12062 BTU/lb.

C. Exterior Paint Finish Characteristics for Panels meeting the requirements of AAMA 621 for G90 galvanized steel or AZ50 Galvalume® :

1. Gloss: 15 ± 5 measured at 60 degree angle tested in accordance with ASTM D523.
2. Pencil Hardness: HB-H minimum tested in accordance with ASTM D3363.
3. Flexibility, T-Bend: 1-2T bend with no adhesion loss when tested in accordance with ASTM D4145.
4. Flexibility, Mandrel: No cracking when bent 180 degrees around a 1/8 mandrel as tested in accordance with ASTM D522.
5. Adhesion: No adhesion loss tested in accordance with ASTM D3359.
6. Reverse Impact: No cracking or adhesion loss when impacted 3000 x inches of metal thickness (lb-in), tested in accordance with ASTM D2794.
7. Abrasion Resistance: Nominal 65 liters of falling sand to expose 5/32 inch diameter of metal substrate when tested in accordance with ASTM D968.
8. Graffiti Resistance: Minimal effect.
9. Acid Pollutant Resistance: No effect when subjected to 30 percent sulfuric acid for 18 hours, or 10 percent muriatic acid for 15 minutes when tested in accordance with ASTM D1308.
10. Salt Fog Resistance: Passes 1000 hours, when tested in accordance with ASTM B117 (5 percent salt fog at 95 degrees F).
11. Cyclic Salt Fog and UV Exposure: Passes 2016 hours when tested in accordance with ASTM D5894.
12. Humidity Resistance: Passes 1500 hours at 100 percent relative humidity and 95 degrees F, with a test rating of 10 when tested in accordance with ASTM D2247 and D714.
13. Color Retention: Passes 5000 hours when tested in accordance with ASTM G153 and G154.
14. Chalk Resistance: Maximum chalk is a rating of 8 when tested in accordance with ASTM D4214, Method A.
15. Color Tolerances: Maximum of 5ΔE Hunter units on panels when tested in accordance with ASTM D2244.

D. Exterior Aggregate Finish Characteristics:

1. Moisture Resistance: 14 days exposure with no deleterious effects when tested in accordance with ASTM D2247.
2. Salt Spray: 1000 hours, no deleterious effects when tested in accordance with ASTM B117.
3. Abrasion Resistance: 500 liters of sand, no deleterious effects when tested in accordance with ASTM D968.
4. Freeze/Thaw (60 cycles): No checking, cracking or splitting.
5. Mold Resistance: No growth of mold when tested per ASTM D3273.
6. Flame Spread: less than 25, Class 1 rating when tested in accordance with ASTM E84.

E. Panel Assembly:

1. Panel thickness: [2 inches] thick.
2. [Panel width (Flat Panels and Striated Panels): [24 inches]

3. Panel joint shall consist of fasteners and attachment clip completely concealed within the joint. Panel joint shall have two distinct lines of defense against water infiltration using continuous finned rubber gasket seal on face and factory wet butyl seal on liner sheet. Horizontal panels shall have a nominal gutter height of 3 1/4 inches.
4. Exterior Face of Panel:

   a. Material:

      1) Steel coil material shall be in accordance with ASTM A755 [Grade 33, G90 galvanized steel in accordance with ASTM A653 and A924] [AZ50 Galvalume® / Zincalume® in accordance with ASTM A792 (contact Kingspan for project specific availability)].
      2) Gauge: [22 (steel)]

   b. Profile: [Flat]

      1) Flat profile to have no flutes, planking, or mild profiling of any type. [Reveal width shall be as indicated on the Drawings].
      2) Striated profile to have linear striations nominal 0.035 inches deep, across the entire face width.

   c. Exterior Texture: [Smooth]

   d. Exterior Paint Finish Color:

      1) [Custom color as selected by Architect] [Color Indicated]

      2) Finish System:
         i. [1.0 mil. Fluropolymer (PVDF) Two Coat system: 0.2 mil primer with 0.8 mil Kynar 500 (70 percent) MICA color coat.]

5. Interior Face of Panel

   a. Material:

      1) Steel coil material shall be [Grade 33, G90 galvanized steel in accordance with ASTM A653 and A924] [AZ50 Galvalume® / Zincalume® in accordance with ASTM A792 (contact Kingspan for project specific availability)].
      2) Gauge: 24 (steel)

   b. Profile: Standard flat, non-profiled
   c. Texture: Smooth
   d. Interior Finish: Modified polyester finish with a total minimum dry film thickness of 0.9 to 1.1 mil including primer.

      1)Color: [Custom color as selected by Architect] [Color indicated].

6. Insulating Core: Core material shall be QuadCore polyisocyanurate (POLYISO) foamed-in-place during panel manufacture to a nominal in-place density of 2.2 to 2.8 pcf.

2.03 ACCESSORIES

A. Fasteners: Fasteners as recommended by manufacturer.

B. Clips: Shall be minimum 14 gauge half-hard type 301 stainless steel with PVC or neoprene foam sealing pad adhered to underside of clip, designed to prevent water infiltration around fastener penetrations.

C. Perimeter Trim:

1. Fabricated perimeter trim and metal flashing: Shall be same gauge, material and coating color as exterior face of insulated metal wall panel.
2. Extruded perimeter trim: Shall be extruded aluminum 6063-T5 alloy with spray applied PVF coating in same color as exterior face of insulated metal wall panel.

D. Butyl Weather Barrier Sealant: Non-skinning butyl tube sealant per panel manufacturer's recommendations compliant with AAMA 809.2.

E. Vertical joint gasket (for horizontal panel applications):

1. Material: [Extruded TPE rubber gasket shall have a finned profile. Vertical joint gasket shall give the appearance of a recessed and tooled caulk joint and be capable of accommodating joint width variations from 3/8 to 3/4 inch due to normal construction tolerances] [Insulated block spline with polyisocyanurate foam core and metal facings designed to be flush with horizontal reveal in matching finish color] [2-piece vertical joint extrusion with 2 1/2 inch wide face cap]
2. Color: [Standard Black gasket]

F. Sealants at exposed joints: [Elastomeric polyurethane] sealant compliant with ASTM C920.

PART 3 - EXECUTION

3.01 EXAMINATION

A. Provide field measurements to manufacturer as required to achieve proper fit of the preformed wall panel envelope. Measurements shall be provided in a timely manner so that there is no impact to construction or manufacturing schedule.

B. Supporting Steel: All structural supports required for installation of panels shall be by others. Support members shall be installed within the following tolerances:

1. Plus or minus 1/8 inch in 5 feet in any direction along plane of framing.
2. Plus or minus 1/4 inch cumulative in 20 feet in any direction along plane of framing.
3. Plus or minus 1/2 inch from framing plane on any elevation.

4. Plumb or level within 1/8 inch at all changes of transverse for performed corner panel applications.
5. Verify that bearing support has been provided behind vertical joints of horizontal panel systems and vertical joints of horizontal panel systems. Width of support shall be as recommended by manufacturer.

C. Examine individual panels upon removing from the bundle; notify manufacturer of panel defects. Do not install defective panels.

3.02 PANEL INSTALLATION

A. Installation shall be in accordance with manufacturer's installation guidelines and recommendations.

B. Install panels plumb, level, and true-to-line to dimensions and layout indicated on approved shop drawings.

C. Cut panels prior to installing, where indicated on shop drawings, using a power circular saw with fine tooth carbide tip blade per manufacturer's instructions. Ventilate area where polyurethane dust is generated. Personnel should wear respiratory and eye protection devices.

D. Butyl Weather Barrier Sealant:

1. Apply non-skinning butyl sealant as shown on shop drawings and manufacturer's installation instructions as necessary to establish the vapor barrier for the panels.
2. Use non-skinning butyl tube sealant only for tight metal-to-metal contact.
3. Do not use non-skinning butyl tube sealant to bridge gaps.

E. Place panel fasteners through pre-punched holes in attachment clips, concealed within the joint of the panel. Secure units to the structural supports. Space clips as recommended by manufacturer or otherwise indicated on the approved shop drawings.

3.03 TRIM INSTALLATION

A. Place trim and trim fasteners only as indicated per details on the approved shop drawings.

B. Field drill weep holes where appropriate in horizontal trim; minimum 1/4 inch diameter at 24 inches on center.

C. Place a continuous strip of butyl tape or butyl tube sealant on closure trims for the length of the panel to be covered by trim.

3.04 SEALANT INSTALLATION FOR EXPOSED JOINTS

A. Clean and prime surfaces to receive exterior exposed sealants in accordance with sealant manufacturer's recommendations.

B. Follow sealant manufacturer's recommendations for joint width-to-depth ratio, application temperature range, size and type of backer rod, and compatibility of materials for adhesion.

C. Direct contact between butyl and silicone sealants shall not be permitted.

3.05 FIELD QUALITY CONTROL

A. Testing Agency: General Contractor shall engage an independent testing and inspection agency acceptable to the architect to perform field tests and inspections and to prepare reports of findings.

B. Field Water Test: After completing portion of metal wall panel assembly including accessories and trim, test a 2-bay area selected by the architect for water penetration in accordance with AAMA 501.2 or ASTM E1105.

3.06 CLEANING AND PROTECTION

A. Remove protective film immediately after installation.

B. Touch-up, repair or replace metal panels and trim that have been damaged.

C. After metal wall panel installation, clear weep holes and drainage channels of obstructions, dirt, and sealant.

END OF SECTION 07 42 13

SECTION 07 54 22 - THERMOPLASTIC POLYOLEFIN (TPO) ROOFING

PART 1 - GENERAL

1.01 SUMMARY

A. Section Includes mechanically fastened TPO membrane roofing system.

1.02 PERFORMANCE REQUIREMENTS

A. General Performance: Installed membrane roofing and base flashings shall withstand specified uplift pressures, thermally induced movement, and exposure to weather without failure due to defective manufacture, fabrication, installation, or other defects in construction. Membrane roofing and base flashings shall remain watertight. Roofing System Design: Provide membrane roofing system that is identical to systems that have been successfully tested by a qualified testing and inspecting agency to resist uplift pressure calculated according to ASCE/SEI 7.
   1. Corner Uplift Pressure: 60 lbf/sq. ft.
   2. Perimeter Uplift Pressure: 90 lbf/sq. ft.
   3. Field-of-Roof Uplift Pressure: 120 lbf/sq. ft.

B. Energy Performance: Provide roofing system with initial solar reflectance not less than 0.80 and emissivity not less than 0.75 when tested according to CRRC-1.

1.03 SUBMITTALS

A. Product Data: For each type of product indicated.

B. Shop Drawings: For roofing system. Include plans, elevations, sections, details, and attachments to other work.

C. Samples for Verification: For the following products:

   1. Sheet roofing, of color specified.

D. Manufacturer Certificates: Signed by roofing manufacturer certifying that roofing system complies with requirements specified in “Performance Requirements” Article.

   1. Submit evidence of compliance with performance requirements.

E. Field quality-control reports.

F. Maintenance data.

1.04 QUALITY ASSURANCE

A. Installer Qualifications: A qualified firm that is approved, authorized, or licensed by membrane roofing system manufacturer to install manufacturer's product.

B. Source Limitations: Obtain components including roof membrane, roof insulation, and fasteners for membrane roofing system from same manufacturer as membrane roofing or approved by membrane roofing manufacturer.

C. Exterior Fire-Test Exposure: ASTM E 108, Class A; for application and roof slopes indicated, as determined by testing identical membrane roofing materials by a qualified testing agency. Materials shall be identified with appropriate markings of applicable testing agency. Pre-installation Roofing Conference: Conduct conference at Project site.

1.05 WARRANTY

A. Contractor: Provide Owner a written warranty for a period of two years after Owner's final acceptance covering all repairs required to correct all defects due to faulty materials or workmanship and to otherwise maintain the roof in a watertight condition and to correct all other defects without regard to watertightness. Make repairs promptly on notification and at no expense to Owner.

B. Roof System Manufacturer: Manufacturer of the single-ply membrane roof system shall furnish a written warranty and guarantee that warrants and guarantees Owner with a watertight condition of roof system and all components thereof for a period of fifteen (15) years from date of Owner's final acceptance. Warranty and guarantee shall cover all labor and materials required to maintain a watertight condition and a roof system free of defects.

PART 2 - PRODUCTS

2.01 TPO MEMBRANE ROOFING

A. Fabric-Reinforced Thermoplastic Polyolefin Sheet: ASTM D 6878, internally fabric or scrim reinforced, uniform, flexible TPO sheet.

B. Products: Subject to compliance with requirements, provide one of the following:
1. "EverGuard TPO" by GAF.
2. "SureWeld TPO" by Carlisle.
3. "UltraPly TPO" by Firestone.
4. "Stevens EP" by Stevens Roofing Systems.

C. Thickness: Provide thickness required by manufacturer to meet length of specified warranty, but not less than 80 mils, nominal.

2.02 AUXILIARY MEMBRANE ROOFING MATERIALS

A. General: Auxiliary membrane roofing materials recommended by roofing system manufacturer for intended use, and compatible with membrane roofing.
1. Liquid-type auxiliary materials shall comply with VOC limits of authorities having jurisdiction.

B. Sheet Flashing: Manufacturer's standard unreinforced thermoplastic polyolefin sheet

flashing, 55 mils thick, minimum, of same color as sheet membrane. F. Bonding Adhesive: Manufacturer's standard.

C. Membrane Fasteners and Plates: Hex head self-drilling steel screw with minimum 2-inch diameter steel plate, length necessary to penetrate the steel deck a minimum of 3/4-inch, such as "Sarnafastener XP" and “Sarandisc XP” as manufactured by Sarnafil, Inc. or "HP-X Fastener with Piranha Plate" by Carlisle.

D. Water Cut-off Mastic: As furnished by membrane manufacturer for this system.

E. Inside Corners and Outside Corners and Molded Pipe Flashings: White molded pipe flashings as furnished by membrane manufacturer for this system.

F. Sponge Tubing: 2-inch diameter compressible foam rubber tubing for use at expansion joints.

G. Protection Sheet: Cut sections of membrane with rounded corners, extending a minimum of 2 inches beyond edges of overlying item.

H. Separation Sheet: Spun-bonded polyester fabric, 1.6 ounces/yard sheet required by manufacturer to separate membrane from extruded or expanded polystyrene insulation, such as "Sarnabarrier" by Sarnafil.

I. Miscellaneous Accessories: Provide pourable sealers, preformed cone and vent sheet flashings, preformed inside and outside corner sheet flashings, T-joint covers, lap sealants, termination reglets, and other accessories.

2.03 ROOF INSULATION

A. Polyisocyanurate Board Insulation: ASTM C 1289, Type II, Class I, Grade 3, felt or glass-fiber mat facer on both major surfaces.

B. Provide preformed saddles, crickets, tapered edge strips, and other insulation shapes where indicated for sloping to drain. Fabricate to slopes indicated.

2.04 INSULATION ACCESSORIES

A. Fasteners: Factory-coated steel fasteners and metal or plastic plates complying with corrosion-resistance provisions in FM Approvals 4470, designed for fastening roof insulation and cover boards to substrate, and acceptable to roofing system manufacturer.

B. Insulation Adhesive: Insulation manufacturer's recommended cold-applied adhesive formulated to attach roof insulation to substrate or to another insulation layer.

C. Cover Board: ASTM C 208, Type II, Grade 2, cellulosic-fiber insulation board, 1/2 inch thick.

D. Cover Board: DOC PS 2, Exposure 1, OSB, 7/16 inch thick.

E. Cover Board: ASTM C 1177/C 1177M, glass-mat, water-resistant gypsum substrate [1/2 inch] thick factory primed.

F. Cover Board: ASTM C 1278/C 1278M, cellulosic-fiber-reinforced, water-resistant gypsum substrate [3/8 inch] thick.

2.05 WALKWAYS

A. Walkway Pads: PVC or TPO based, reinforced walkpads, as approved by membrane manufacturer.

PART 3 - EXECUTION

3.01 INSULATION INSTALLATION

A. Coordinate installing membrane roofing system components so insulation is not exposed to precipitation or left exposed at the end of the workday.

B. Comply with membrane roofing system and insulation manufacturer's written instructions for installing roof insulation.

C. Install insulation under area of roofing to achieve required thickness. Where overall insulation thickness is 2.7 inches or greater, install two or more layers with joints of each succeeding layer staggered from joints of previous layer a minimum of 6 inches in each direction.

D. Mechanically Fastened Insulation: Install each layer of insulation and secure to deck using mechanical fasteners specifically designed and sized for fastening specified board-type roof insulation to deck type.
1. Fasten insulation to resist uplift pressure at corners, perimeter, and field of roof.

E. Install cover boards over insulation with long joints in continuous straight lines with end joints staggered between rows. Offset joints of insulation below a minimum of 6 inches in each direction. Loosely butt cover boards together and fasten to roof deck.
1. Fasten cover boards to resist uplift pressure at corners, perimeter, and field of roof.

F. Where required by the manufacturer, install slip sheet over insulation and immediately beneath membrane roofing.

3.02 MECHANICALLY FASTENED MEMBRANE ROOFING INSTALLATION

A. Mechanically fasten membrane roofing over area to receive roofing and install according to roofing system manufacturer's written instructions.

B. Accurately align membrane roofing and maintain uniform side and end laps of minimum dimensions required by manufacturer. Stagger end laps.

C. Mechanically fasten or adhere membrane roofing securely at terminations, penetrations, and perimeter of roofing.

1. Secure the edge of the sheet with specified fasteners and plates spaced in accordance with manufacturer's recommended fastening pattern to resist specified uplift pressures. Fastener pattern shall not exceed 12-inches on center. Do not overdrive the seam fasteners. Overdriving, which causes wrinkling of the membrane, is unacceptable and shall be corrected prior to acceptance.

D. Apply membrane roofing with side laps shingled with slope of roof deck where possible.

E. In-Seam Attachment: Secure one edge of TPO sheet using fastening plates or metal battens centered within membrane seam and mechanically fasten TPO sheet to roof deck.

F. Seams: Clean seam areas, overlap membrane roofing, and hot-air weld side and end laps of membrane roofing and sheet flashings according to manufacturer's written instructions to ensure a watertight seam installation.
1. Test lap edges with probe to verify seam weld continuity. Apply lap sealant to seal cut edges of sheet membrane.
2. Verify field strength of seams a minimum of twice daily and repair seam sample areas.
3. Repair tears, voids, and lapped seams in roofing that does not comply with requirements.

3.03 BASE FLASHING INSTALLATION

A. Install sheet flashings and preformed flashing accessories and adhere to substrates according to membrane roofing system manufacturer's written instructions.

B. Apply bonding adhesive to substrate and underside of sheet flashing at required rate and allow to partially dry. Do not apply to seam area of flashing.

C. Flash penetrations and field-formed inside and outside corners with cured or uncured sheet flashing.

E. Clean seam areas, overlap, and firmly roll sheet flashings into the adhesive. Hot-air weld side and end laps to ensure a watertight seam installation. Q. Terminate and seal top of sheet flashings.

3.04 DAILY SEAL:

A. Ensure that water does not flow beneath any completed sections of membrane system. This will include completion of all flashings, terminations, and daily seals. When possible, install.

B. Temporarily seal any loose membrane edge with manufacturer's water cutoff sealant. Exercise caution to ensure that membrane is not temporarily sealed in such a manner as to promote water migration below the membrane or impede drainage.

C. Install daily night seals by extending the roof membrane beyond the insulation and sealing to existing roof deck surface.

D. When work is resumed, remove and dispose of membrane that has become contaminated

that may prevent proper installation of new roof system before resuming installation.

3.05 WALKWAY INSTALLATION

A. Flexible Walkways: Install walkway products in locations indicated. Heat weld to substrate or adhere walkway products to substrate with compatible adhesive according to roofing system manufacturer's written instructions.

3.06 FIELD QUALITY CONTROL

A. Final Roof Inspection: Arrange for roofing system manufacturer's technical personnel to inspect roofing installation on completion.

B. Repair or remove and replace components of membrane roofing system where inspections indicate that they do not comply with specified requirements.

3.07 CLEANING

A. Upon completion of installation of roof system, flashings, and sheet metal, clean surfaces of roof membrane and membrane flashings by power washing methods. Remove debris, dirt, adhesives, sealants, surface contaminants, or materials that cause surface discoloration from surfaces.

B. Remove all work related dirt, debris, bitumen, drippage, spills, etc. from finishes of building or building grounds.

END OF SECTION 07 54 22

SECTION 07 62 00 - SHEET METAL FLASHING AND TRIM

PART 1 - GENERAL

1.01 SUMMARY

A. This Section includes sheet metal roof-edge trim and flashing not covered in pre-engineered metal building Section.

B. Submittals: Product Data, Shop Drawings, and Samples for each item specified.

PART 2 - PRODUCTS

A. Aluminium-Coated (Galvalume) Steel Sheet: ASTM A 792 Grade 50 (A 792M-AZ50); structural quality, satin finish, milloils, chemicals and residue removed.

B. Miscellaneous Materials and Accessories: As follows:
1. Fasteners: Noncorrosive metal. Match finish of exposed heads with material being fastened.
2. Asphalt Mastic: SSPC-Paint 12, asbestos free, solvent type.
3. Roofing Cement: ASTM D 4586, Type I, asbestos free, asphalt based.
4. Mastic Sealant: Polyisobutylene; nonhardening, nonskinning, nondrying, nonmigrating sealant.
5. Elastomeric Sealant: As specified in Division 7 Section "Joint Sealants."
6. Clips, Straps, Anchoring Devices, and Similar Accessories: Compatible with material being installed.

C. Fabricate sheet metal flashing and trim to comply with recommendations of SMACNA's "Architectural Sheet Metal Manual" that apply to the design, dimensions, metal, and other characteristics of the item indicated.

D. Coil-Coated Galvalume Finish: 2-coat fluoropolymer Hylar 5000 or Kynar 500.
1. Color and Gloss: As selected by Architect.

PART 3 - EXECUTION

3.01 INSTALLATION

A. Installation: Comply with manufacturer's instructions and SMACNA's "Architectural Sheet Metal Manual" allow for thermal expansion; set true to line and level as indicated. Install Work with laps, joints, and seams permanently watertight and weatherproof; conceal fasteners where possible.
1. Roof-Edge Flashings: Secure metal flashings at roof edges according to FM Loss Prevention Data Sheet 1-49 for specified wind zone.

B. Expansion Provisions: Provide for thermal expansion of exposed sheet metal Work. Space

movement joints at maximum of 10 feet (3 m) with no joints allowed within 24 inches (610 mm) of corner or intersection. Where lapped or bayonet-type expansion provisions in Work cannot be used or would not be sufficiently weatherproof and waterproof, form expansion joints of intermeshing hooked flanges, not less than 1 inch (25 mm) deep, filled with mastic sealant (concealed within joints).

C. Sealed Joints: Form nonexpansion, but movable, joints in metal to accommodate elastomeric sealant to comply with SMACNA standards. Fill joint with sealant and form metal to completely conceal sealant.

D. Seams: Fabricate nonmoving seams in sheet metal with flat-lock seams. Tin edges to be seamed, form seams, and solder.

E. Separations: Separate noncompatible metals or corrosive substrates with a coating of asphalt mastic or other permanent separation as recommended by manufacturer.

F. Counterflashings: Coordinate installation with installation of assemblies to be protected by counterflashing. Install counterflashings in reglets or receivers. Secure in a waterproof manner by means of snap-in installation and sealant, lead wedges and sealant, interlocking folded seam, or blind rivets and sealant. Lap counterflashing joints a minimum of 2 inches (50 mm) and bed with sealant.

END OF SECTION 07 62 00

SECTION 07 71 23 – MANUFACTURED GUTTERS AND DOWNSPOUTS

PART 1 - GENERAL

1.1 SUMMARY

A. Section includes pie-finished sheet metal gutters and downspouts.

B. Related Sections:

1. Section 07 62 00 - Sheet Metal Flashing and Tinn.
2. Section 07 90 00 - Joint Protection.

1.2 REFERENCES

A. American Architectural Manufacturers Association:

1. AAMA 611 - Voluntary Specification for Anodized Architectural Aluminum.
2. AAMA 2603 – Voluntary Specification, Performance Requirements and Test Procedures for Pigmented Organic Coatings on Aluminum Extrusions and Panels.
3. AAMA 2604 - Voluntary specification, Performance Requirements and Test Procedures for High Performance Organic Coatings on Aluminum Extrusions and Panels.
4. AAMA 2605 - Voluntary Specification, Performance Requirements and Test Procedures for Superior Performing Organic Coatings on Aluminum Extrusions and Panels.

B. ASTM International:

1. ASTM A653/A653M - Standard Specification for Steel Sheet, Zinc-Coated (Galvanized) or Zinc-L on Alloy-Coated (Galvannealed) by the Hot-Dip Process.
2. ASTM A666 - Standard Specification for Austenitic Stainless Steel Sheet, Surp. Plate, and Flat Ba.
3. ASTM B 32 - Standard Specification for Solder Metal.
4. ASTM B 209 - Standard Specification for Aluminum and Aluminum-Alloy Sheet and Plate.
5. ASTM B 370 – Standard Specification for Copper Sheet and Std ip for Building Construction.
6. Federal Specification Unit:
   a. FS TT-C-494 - Coating Compound, Bituminous, Solvent Type, Acid Resistant

C. Sheet Metal and Air Conditioning Conti actors:

1. SMACNA - Architectural Sheet Metal Manual

1.3 DESIGN REQUIREMENTS

A. Conform to applicable code for size and method of rain water discharge.

1.4 SUBMITTALS

A. Section 01 33 00 - Submittal Procedures: Submittal procedures.

B. Shop Drawings (Submittals for Record): Provide drawings to indicate profiles, quantities, and details.

C. Samples (Submittals for Review): Provide samples for confirmation of color and finish.

1.5 QUALITY ASSURANCE

A. Per for in Work in accordance with SMACNA Manual.

1.6 DELIVERY, STORAGE, AND HANDLING

A. Section 01 60 00 - Product Requirements: Product storage and handling requirements.

B. Stack material to prevent twisting, bending, and abrasion, and to provide ventilation. Slope to prevent contact with materials during storage capable of causing discoloration, staining, or damage.

1.7 COORDINATION

A. Section 01 30 00 - Administrative Requirements: Coordination and project conditions.

B. Coordinate Work with downspout discharge pipe inlet.

1.8 WARRANTY

A. Section 01 70 00 - Execution and Closeout Requirements: Product want an ties and product bonds.

B. Furnish 5-year manufacture warranty for gutted and downspout finishes.

PART 2 – PRODUCTS

2.1 GUTTERS AND DOWNSPOUTS

A. Manufactures:

1. Bet get Building Products Corp.
2. Klauer Manufacturing Co.
3. Oboyke, Inc.
4. Substitutions: Section 01 60 00 - Product Requirements.

B. Product Description:

1. Gutters: Sheet metal; Rectangular style profile.
2. Downspout Boots and Shoes: Plastic.

2.2 COMPONENTS

A. Pie-Finished Galvanized Steel Sheet: ASTM A653/A653M, G90 zinc coating; 0.02-inch 24 gage core steel, shop pie-coated with acrylic coating; color as selected ft om manufacturer’s standards.

2.3 ACCESSORIES

A. Anchors and Supports: Profiled to suit gutters and downspouts.

1. Anchoring Devices: Type recommended by fabrication.
2. Gutted Supports: Straps
3. Downspout Supports: Straps

B. Fastened: Same material and finish as gutters and downspouts, with soft neoprene washers.

C. Primer: Galvanized ii on type.

D. Protective Backing Paint: FS TT-C-494, bituminous.

2.4 FABRICATION

A. For in gutters and downspouts of profiles and sizes indicated.

B. Fabricate with required connection pieces.

C. For in sections to shape indicated on Drawings, square, and accurate in size, in maximum possible lengths, free of distortion or defects detrimental to appearance or performance. Allow for expansion at joints.

D. Hem exposed edges of metal.

E. Fabricate gutted and downspout accessories; solder water tight.

2.5 FACTORY FINISHING

A. Acrylic polyester coating: Baked enamel system conforming to AAMA 2603.

B. Pt inner Coat: Finish concealed side of metal sheets with pi inner compatible with finish system, as recommended by finish system manufacturer.

PART 3 EXECUTION

3.1 EXAMINATION

A. Section 01 30 00 - Administrative Requirements: Coordination and project conditions.

B. Verify surfaces are ready to receive gutters and downspouts.

3.2 PREPARATION

A. Paint concealed metal surfaces and surfaces in contact with dissimilar metals with protective backing paint to a minimum drying film thickness of 15 mil.

3.3 INSTALLATION

A. Slope gutters 1/4 inch per foot minimum.

B. Sodder metal joints for full metal surface contact. After soldering, wash metal clean with neutralizing solution and rinse with water.

C. Connect downspouts to downspout boots and shoes at 8 inches above grade. Seal connection water tight.

END OF SECTION 07 71 23

SECTION 07 84 13 - FIRESTOPPING

PART 1 – GENERAL

1.01 SUMMARY

A. This Section includes through-penetration firestop systems for penetrations through fire-resistance-rated assemblies, including both empty openings and openings containing penetrating items.

B. Performance Requirements: Provide through-penetration firestop systems that are produced and installed to resist spread of fire according to requirements indicated, resist passage of smoke and other gases, and maintain original fire-resistance rating of assembly penetrated.
   1. F-Rated Systems: Provide through-penetration firestop systems with F-ratings indicated, as determined per ASTM E 814, but not less than that equaling or exceeding fire-resistance rating of constructions penetrated.
   2. T-Rated Systems: For the following conditions, provide through-penetration firestop systems with T-ratings indicated, as well as F-ratings, as determined per ASTM E 814, where systems protect penetrating items exposed to potential contact with adjacent materials in occupiable floor areas:
      a. Penetrations located outside wall cavities.
      b. Penetrations located outside fire-resistive shaft enclosures.
      c. Penetrations located in construction containing fire-protection-rated openings.
      d. Penetrating items larger than 4-inch- (100-mm-) diameter nominal pipe or 16 sq. in. (100 sq. cm) in overall cross-sectional area.
   3. For through-penetration firestop systems exposed to view, traffic, moisture, and physical damage, provide products that after curing do not deteriorate when exposed to these conditions both during and after construction.
      a. For piping penetrations for plumbing and wet-pipe sprinkler systems, provide moisture-resistant through-penetration firestop systems.
      b. For penetrations involving insulated piping, provide through-penetration firestop systems not requiring removal of insulation.
   4. For through-penetration firestop systems exposed to view, provide products with flame-spread ratings of less than 25 and smoke-developed ratings of less than 450, as determined per ASTM E 84.

C. Submittals:
   1. Product Data for each type of product specified.
   2. Shop Drawings: For each through-penetration firestop system, show each kind of construction condition penetrated, relationships to adjoining construction, and kind of penetrating item. Include firestop design designation of testing and inspecting agency acceptable to authorities having jurisdiction.
   3. Product Certificates: Signed by manufacturers of through-penetration firestop system products certifying that products furnished comply with requirements.
   4. Product Test Reports: From a qualified testing agency indicating through-penetration firestop system complies with requirements, based on comprehensive testing of current products.

D. Fire-Test-Response Characteristics: Provide through-penetration firestop systems that comply with the following requirements and those specified in "Performance Requirements" Paragraph:
   1. Firestopping tests are performed by a qualified testing and inspecting agency. A qualified testing and inspecting agency is UL, ITS, or another agency performing testing and follow-up inspection services for firestop systems acceptable to authorities having jurisdiction.
   2. Through-penetration firestop systems are identical to those tested per ASTM E 814 and bear classification marking of qualified testing and inspecting agency.

PART 2 – PRODUCTS

2.01 MATERIALS

A. Products: Subject to compliance with requirements, provide one of the through-penetration firestop systems indicated for each application on Drawings.

B. Through-penetration Firestop Systems: Provide through-penetration firestop systems that are compatible with one another, with the substrates forming openings, and with the items, if any, penetrating through-penetration firestop systems, under conditions of service and application, complying with performance requirements, as demonstrated by through-penetration firestop system manufacturer based on testing and field experience.

C. Accessories: Provide components for each through-penetration firestop system that are needed to install fill materials and to comply with "Performance Requirements" Paragraph. Use only components specified by through-penetration firestop system manufacturer and approved by the qualified testing and inspecting agency for firestop systems indicated. Accessories include, but are not limited to, the following items:
   1. Permanent forming/damming/backing materials.
   2. Temporary forming materials.
   3. Substrate primers.
   4. Collars.
   5. Steel sleeves.

PART 3 – EXECUTION

3.01 INSTALLATION

A. General: Install through-penetration firestop systems to comply with "Performance Requirements" Paragraph and firestop system manufacturer's written installation instructions and published drawings for products and applications indicated.

B. Install forming / damming / backing materials and other accessories of types required to support fill materials during their application and in the position needed to produce cross-sectional shapes and depths required to achieve fire ratings indicated.

C. If required by authorities having jurisdiction, identify through-penetration firestop systems with pressure-sensitive, self-adhesive, preprinted vinyl labels. Attach labels permanently to surfaces of penetrated construction on both sides of each firestop system installation where labels will be visible to anyone seeking to remove penetrating items or firestop systems. Include the following information on labels:

1. The words: "Warning--Through-Penetration Firestop System--Do Not Disturb. Notify Building Management of Any Damage."
2. Contractor's name, address, and phone number.
3. Through-penetration firestop system designation of applicable testing and inspecting agency.
4. Date of installation.
5. Through-penetration firestop system manufacturer's name.
6. Installer's name.

D. Fire rated partitions shall be identified as required by Authority Having Jurisdiction but at a minimum stenciled 15 feet from end of wall section and spaced 30 feet in Red Paint (SW 6871 “Positive Red”). Lettering to be stenciled not less than 3 inches and minimum 3/8” stroke.
   1. Stencil to read – “1 HOUR FIRE RATED ASSEMBLY – PROTECT ALL OPENINGS AND PENETRATIONS”

END OF SECTION 07 84 13

SECTION 07 92 00 - JOINT SEALANTS

PART 1 – GENERAL

1.01 SUMMARY

A. Provide sealants at intersection of building components.

1.02 SUBMITTALS

A. Submit for review samples, product data, and installation instructions.

B. Submit certification that materials are compatible with other materials in the joint system, or, if not compatible, recommendation and certification of other products that can be so certified.

1.03 QUALITY ASSURANCE

A. Comply with governing codes and regulations. Provide products of acceptable manufacturers which have been in satisfactory use in similar service for three years. Use experienced installers. Deliver, handle, and store materials in accordance with manufacturer's instructions.

PART 2 – PRODUCTS

2.01 MATERIALS

A. Joints designed for expansion and movement conditions at site:
1. Exterior joints on vertical surfaces: Non-sag two-part polyurethane, modified; Tremco Dymeric or equal acceptable to the Architect.
2. Horizontal paving joints: Self-leveling polyurethane; Tremco THC 900 or equal acceptable to the Architect.
3. Interior joints: Acrylic latex; Sherwin Williams 950A.
4. Seam sealant for small metal-to metal joints; Tremco Seam Sealer or equal acceptable to the Architect.
5. Pre-compressed expanding sealant tape; Emseal PC-SA or equal acceptable to the Architect.
6. Acoustical Sealant: U.S. Gypsum Acoustical Sealant or equal acceptable by the Architect.
7. Pavement joint filler: Cork joint filler, resilient and non-extruding, ASTM D1752, TYPE 2, or AASHTO M153, TYPE 2.
8. Primers, bond breakers, and backer rods compatible with sealant and adjacent surfaces. Backer rods: closed-cell extruded polymer foam.
9. Fire-retardant sealant: Non-shrinking, non-migrating polyisobutylene/ polybutene sealant, 3M Barrier Caulk, CP-25 or equal acceptable to the Architect.
10. Acrylic Glazing Sealant: Tremco Mono or equal acceptable to the Architect.
11. Bearing pads: Continuous Neoprene bearing pads of width and thickness to match existing at steel-framed concrete lift-out panels over transformer vault; with associated compatible cements and sealants, if any, required for watertight installation.
12. Neoprene tubing and gaskets: Where shown, provide continuous neoprene extrusions of shape or diameter and wall thickness appropriate for the application.
13. Compressible fire-retardant joint filter: USG "Thermafiber" mineral fiber blanket fire safe material.

PART 3 – EXECUTION

3.01 INSTALLATION

A. Examine substrate; report unsatisfactory conditions in writing. Beginning work means acceptance of substrates.

B. Provide sealants in colors selected by Architect from manufacturer's standard colors.

C. Provide multiple masonry veneer control joint sealant colors matching adjacent masonry. Do not match mortar color. Change sealant color as adjacent masonry color changes. Coordinate with Architect where multi-masonry colors exist.

D. Install materials and systems in accordance with manufacturer's instructions and reviewed submittals. Install materials and systems in proper relation with adjacent construction and with uniform smooth appearance. Coordinate with work of other sections. Clean and prime joints, and install bond breakers, backer rods and sealant as recommended by manufacturers.

E. Depth shall equal width up to 1/2" wide; depth shall equal 1/2 width for joints over 1/2" wide, except fill joints completely with fire-retardant products.

F. Cure and protect sealants as directed by manufacturers. Replace or restore damaged sealants. Clean adjacent surfaces to remove spillage and smears.

G. Clean other work damaged or soiled by work of this Section.

END OF SECTION 07 92 00

SECTION 08 11 13 - HOLLOW METAL DOORS AND FRAMES

PART 1 – GENERAL

1.01 SECTION INCLUDES

A. Provide items shown on the drawings and specified, including, but not limited to the following:
   1. Standard steel doors
   2. Steel frames for doors, sidelites, transoms, and windows.
   3. Louvers and vision lites in steel doors, if shown or required.
   4. Sound rated steel doors.

1.02 RELATED WORK

A. Section 04 20 00, Unit Masonry

B. Section 05 40 00, Cold-Formed Metal Framing

C. Section 05 50 00, Metal Fabrications

D. Section 08 14 23.16, Plastic Laminate Faced Wood Doors

E. Section 08 71 00, Finish Hardware

F. Section 08 80 00, Glazed Systems: Glazing in doors, sidelites, transoms, and windows.

G. Section 09 91 00, Painting

1.03 REFERENCES

A. American National Standards Institute (ANSI)
   1. A115.IG, Installation Guide for Doors and Hardware
   2. A224.1, Test Procedure and Acceptance Criteria for Prime Painted Steel Surfaces for Steel Doors & Frames.
   3. A250.8, Recommended Specifications for Standard Steel Doors and Frames. (Formerly SDI-100)
   4. A250.11, Recommended Erection Instructions for Steel Frames (Formerly SDI- 105).

B. ASTM International (ASTM)
   1. A653, Standard Specification for Steel Sheet, Zinc-Coated (Galvanized) or Zinc- Iron Alloy-Coated (Galvannealed) by the Hot-Dip Process
   2. A924, Standard Specification for General Requirements for Steel Sheet, Metallic- Coated by the Hot-Dip Process
   3. A1008, Standard Specification for Steel, Sheet, Cold-Rolled, Carbon, Structural, High-Strength Low-Alloy and High-Strength Low-Alloy with Improved Formability
   4. A1011, Standard Specification for Steel, Sheet and Strip, Hot-Rolled, Carbon, Structural, High-Strength Low-Alloy and High-Strength Low-Alloy with Improved Formability
   5. C1363 - Standard Test Method for the Thermal Performance of Building Assemblies by Means of a Hot Box Apparatus
   6. E413 - Standard Classification for Rating Sound Insulation

7. E2074, Standard Test Method for Fire Tests of Door Assemblies (Formerly A152)

C. Federal Specification (Fed Spec)
1. Fed Spec C578 Bead Fusion Test

D. Hollow Metal Manufacturers Association (HMMA)
1. HMMA 802 - Manufacturing of Hollow Metal Doors and Frames.
2. HMMA 810 - Hollow Metal Doors.
3. HMMA 830 - Hardware Preparation and Locations for Hollow Metal Doors and Frames.
4. HMMA 840 - Installation and Storage of Hollow Metal Doors and Frames.
5. HMMA 850 - Fire Rated Hollow Metal Doors & Frames.
6. HMMA 890 - Technical Summary of Hollow Metal by HMMA

E. National Fire Protection Association (NFPA)
1. 80, Fire Doors and Fire Windows
2. 252, Fire Tests of Door Assemblies

F. Steel Door Institute
1. Technical Data Series

G. Underwriters Laboratories Inc. (UL)
1. Building Materials Directory
2. Listing and Labeling
3. 10B and 10C, Fire Tests of Door Assemblies
4. 1784, Air Leakage Tests of Door Assemblies

H. Intertek Testing, Services (Warnock Hersey, Inc. (WHI))
1. Listing and Labeling

1.04 SUBMITTALS

A. Product Data:
1. Manufacturer's standard details and catalog data demonstrating compliance with specifications and referenced standards.
2. Manufacturer's installation instructions.

B. Shop Drawings:
1. Indicate complete schedule in detail for each steel door and frame using the same reference number for details and openings as those on the Contract Drawings. If any door is not by the steel door manufacturer only the door opening number should be shown along with the type of door (wood, plastic laminate faced, etc.).
2. Show details of construction, installation, connections, anchors, hardware reinforcement, hardware preparation, louvers, and floor and threshold clearances.

C. Samples:
1. 12-inch x 12-inch sample of a fire-rated and non-rated door, cut from corner of door, showing door construction.
2. 12-inch x 12-inch sample of each type of door louver specified or required, showing louver construction.
3. 6-inch long sample of a fire-rated, non-rated frame, and each type of glass stop specified or required, showing corner and construction.

D. Certificates:
1. Manufacturer's certification that oversized openings are in compliance with specifications.

1.05 QUALITY ASSURANCE

A. Manufacturer Qualifications: If other than a manufacturer listed under Paragraph 2.1 is proposed for use on the Project, it shall be a company specializing in the manufacturer of steel doors and frames of the type specified for this Project with a minimum of five (5) year experience.

B. All steel doors and frames shall be by a single manufacturer.

1.06 PRE-INSTALLATION CONFERENCE

A. Refer to Section 01 31 00, Project Management and Coordination.

1.07 COORDINATION

A. Coordinate the Work of this Section with work in which hollow metal work is installed.

B. Coordinate hardware installation with opening construction. Finish hardware is specified in Section 08 71 00, Finish Hardware

C. Coordinate doors, frames, and windows with glazing specified in Section 08 80 00, Glazed Systems.

D. Coordinate doors and frames with painting specified in Section 09 91 00, Painting.

1.08 DELIVERY, STORAGE AND HANDLING

A. Deliver and store products in accordance with manufacturer's instructions, and as follows:
1. In manufacturer's original, clearly labeled, undamaged containers or wrappers.
2. Containers or wrappers shall list the name of the manufacturer and product.

B. Deliver materials to allow for minimum storage time at the project site. Coordinate delivery with the scheduled time of installation.

C. Protect products from moisture, construction traffic, and damage.
1. Store under cover in a clean, dry place, protected from weather and abuse.
2. Store in a manner that will prevent rust or damage.
3. Store doors in a vertical position, spaced with blocking to permit air circulation.
4. Do not use non-vented plastic or canvas shelters.
5. Should containers or wrappers become wet, remove immediately.

1.09 WARRANTY

A. Warrant the work specified herein for one (1) year against becoming unserviceable or causing an objectionable appearance resulting from either defective or non-conforming materials and workmanship.

B. Defects shall include, but not be limited to:
   1. Use of incorrect materials in opening
   2. Incorrect labeled components installed within opening.
   3. Noisy, rough or difficult operation
   4. Failure to meet specified quality assurance requirements.

PART 2 – PRODUCTS

2.01 APPROVED MANUFACTURERS

A. Manufacturers listed below whose products meet or exceed the specifications are approved for use on the Project. Other manufacturers must comply with Paragraph 1.5, A, Manufacturer Qualifications, must manufacture equivalent products to those specified and comply with requirements of Division 1 regarding substitutions to be considered.
   1. Amweld Building Products, Inc., Garrettsville, OH; (330) 527-5122
   2. American Door Products, Houston, TX; (713) 681-8047 (Pearland Industries, Inc.)
   3. CECO Door Products, Brentwood, TN; (615) 661-5030
   4. Curries Company, Mason City, IA; (515) 423-1334
   5. Deansteel Mfg. Co., San Antonio, TX; (615) 210-226-8271
   6. Door Pro Systems, Inc., Houston, TX; (713) 462-0860
   7. P-W Metal Products, Inc., Garland, TX; (214) 487-0454
   8. Republic Builders Products Company, McKenzie, TN; (800) 733-3667
   9. Rocky Mountain Metals, Inc., Raton, NM; (505) 445-2756
   10. Steelcraft Mfg. Co., Cincinnati, OH; (513) 745-6400

2.02 GENERAL MATERIALS

A. Steel requirements, all frames to be manufactured of commercial quality, stretcher leveled flatness, cold rolled steel per ASTM-A1008 general requirements. Internal reinforcing may be manufactured of hot rolled pickled and oiled steel per ASTM-A1011.

B. Exterior doors/frames and interior frames where shown on drawings or required in damp, moist, humid, and wet areas, i.e., toilets, locker rooms, showers, etc., to be manufactured of commercial quality, stretcher leveled flatness, cold rolled steel and galvannealed to 'A-60' minimum coating weight standard per ASTM-A653 and A924, with coating weight of not less than 0.60 ounce per square foot (0.30 ounce per square foot per side).

2.03 FRAME FABRICATION

A. Minimum Gauges:
   1. Interior Openings:
      a. 4-feet 0-inches or Less in Width: 16 gauge
      b. Over 4-feet 0-inches in Width: 14 gauge
   2. Exterior Openings: 14 gauge

B. Design and Construction
   1. Frames shall be custom made, welded units with integral trim of sizes and shapes shown on approved shop drawings. Hinge jambs that butt adjacent 90 degree walls shall have at least 4-inch wide frame face to assure the door trim will not strike the wall prior to the door opening at least 90 degrees. Frame profile shall match wall thickness where practical, i.e., 4-3/4 inch at 4-inch CMU, 6¾-inch at 6-inch CMU, and 8¾-inch at 8-inch CMU. At

masonry wall openings, fabricate frames to suit masonry opening with 2-inch head member.

2. Frames shall be strong and rigid, neat in appearance, square, true and free of defects, warp and buckle. Molded members shall be clean cut, straight and of uniform profile throughout their length.
3. Jamb depths, trim, profile and backbends shall be as shown on approved shop drawings.
4. Corner joints, including face and inside corners, shall have contact edges closed tight, with trim faces mitered and continuously welded, and stops butted. The use of gussets shall not be permitted. Face of frame shall be ground smooth. Knockdown (KD) frames are not permitted.
5. Minimum depth of stops shall be 5/8 inch, except at fire windows where minimum depth of stops shall be 3/4 inch.
6. Frames for multiple openings shall have mullion and rail members which are closed tubular shapes having no visible seams or joints. Joints between faces of abutting members shall be securely welded and finished smooth. Mullions shall be key locked removable type. Keys shall be master keyed to Owner's keying system.
7. Hardware Reinforcements:
    a. Frames shall be mortised, reinforced, drilled and tapped at factory for fully template mortised hardware in accordance with approved hardware schedule and templates provided by Section 08 71 00, Finish Hardware. Where surface-mounted hardware is to be applied, frames shall have reinforcing plates only.
    b. Minimum thickness of hardware reinforcing plates shall be as follows:
        1) Hinge and Pivot Reinforcements (1-1/4 inch x 10 inch minimum size): 7 gauge
        2) Strike Reinforcements: 12 gauge
        3) Flush Bolt Reinforcements: 12 gauge
        4) Closer Reinforcements: 12 gauge
        5) Reinforcements for Surface-Mounted Hardware, Hold-Open Arms, Surface Panic Devices: 12 gauge
8. Floor Anchors: Minimum 14 gauge, securely welded inside each jamb, with holes for floor anchorage.
9. Jamb Anchors:
    a. Frames for installation in masonry walls shall be provided with adjustable jamb anchors of the T-Strap type. Anchors shall be not less than 16 gauge steel. The number of anchors provided at each jamb shall be as follows:
        1) Frames up to 7 feet-6 inch height - Three (3) anchors
        2) Frames 7 feet-6 inch to 8 feet-0 inch height - Four (4) anchors
        3) Frames over 8 feet-0 inch height - One (1) anchor for each 2-feet or fraction thereof in height.
    b. Frames for installation in wood or metal stud partitions shall be provided with steel anchors of suitable approved design, not less than 16 gauge thickness, securely welded inside each jamb as follows:
        1) Frames up to 7-feet 6-inch height - Four (4) anchors
        2) Frames 7-feet 6-inch to 8-feet 0-inch height - Five (5) anchors
        3) Frames over 8-feet 0-inch height - Four (4) anchors plus one (1) additional for each 2-feet or fraction thereof over 8-feet 0-inches.
    c. Frames to be anchored to previously placed concrete, masonry or structural steel shall be provided with anchors of suitable design as shown on approved shop drawings.
10. Dust Cover Boxes: Shall be of not less than 26 gauge steel and shall be provided at all mortised hardware items. 8-inch CMU walls with face brick shall have dual offset jamb anchors.

11. Steel Spreader: Shall be provided on all frames, temporarily attached to bottoms of both jambs for bracing during shipping and handling.
12. Loose Glazing Stops: Shall be of cold rolled steel, not less than 20 gauge, butted at corner joints and secured to the frame with countersunk cadmium or zinc-plated screws. Loose stops at exterior frames shall be placed on the exterior side of the frames, unless otherwise shown.
13. At sound rated door openings and at masonry openings, coat inside of frame profile with bituminous coating to minimum thickness of 1/16 inch.

C. Frame Color: Field painted under Section 09 91 00, Painting, to match face of door.

2.04 DOOR FABRICATION

A. Minimum Gauges:
1. Interior Doors: 0.047 inch or 18 gauge
2. Exterior Doors: 0.059 inch or 16 gauge

B. Design and Construction:
1. Types: Doors shall be custom fabricated, of types and sizes shown on approved shop drawings, and shall be fully welded seamless construction with no visible seams or joints on faces or vertical edges.
2. Thickness: Shall be 1¾-inch, unless specifically noted or shown otherwise.
3. Fabrication:
   a. Doors shall be strong, rigid and neat in appearance, free from warpage and buckle.
   b. Corner bends shall be true and straight and of minimum radius for gage of metal used.
   c. Provide 22 gauge steel stiffeners spaced a maximum 6-inches on center and extending full height of door.
   d. Fill interior with noncombustible fiberglass insulation. Use mineral board filler as required for labeled doors.
   e. Faces shall be joined at vertical edges of door by a continuous weld extending full height of door. Welds shall be ground, filled and dressed smooth to provide a smooth flush surface.
   f. Top and bottom edges of doors shall be closed with a continuous recessed steel channel not less than 16 gauge, extending full width of door and spot weld to both faces. Exterior doors shall have an additional flush closing
   g. Doors within wet or humid areas shall have a top cap and solid foam interior core to prevent internal moisture accumulation.
   h. Edge profile shall be provided on both vertical edges of door as follows:
      1) Single-Acting Swing Doors: Beveled 1/8-inch in 2-inches.
   i. Hardware Reinforcements:
      1) Doors shall be mortised, reinforced, drilled and tapped at factory for fully template hardware, in accordance with the approved hardware schedule and templates provided by Section 08 71 00, Painting. Where surface-mounted hardware is to be applied, doors shall have reinforcing plates only.
      2) Minimum gauges for hardware reinforcing plates shall be as follows:
   a. Hinge & Pivot Reinforcements: 7 gauge
   b. Reinforcements for Lock Face, Flush Bolts, Concealed Holders, Concealed or Surface-Mounted Closers: 12 gauge

4. Glass Moldings and Stops: Loose stops shall be not less than 20 gauge steel, with butt corner joints, secured to frame opening by countersunk screws. Snap-on attachments will not be acceptable.
5. Louvers: Shall be inverted "V" blade, sightproof type, unless noted otherwise.
6. Edge Clearances:
   a. Between Door and Frame at Head and Jambs: 1/8-inch
   b. At Door Sills with No Threshold: 5/8-inch to 3/4-inch above finished floor
   c. At Door Sills with Threshold: As required to suit threshold
   d. Between Meeting Edges of Double Doors: 1/8-inch

C. Finish:

1. Shop Paint Steel (whether galvanized or ungalvanized) Stops and Accessories as follows:
   a. Clean surfaces free of mill scale, rust, oil, grease, dirt and other foreign matter.
   b. Chemically treat surfaces and apply one (1) coat of an approved baked-on rust-inhibitive primer paint to provide a minimum 0.5 mil dry film thickness.
2. Field painted under Section 09 91 00, Painting.

D. Sound Rated Door: STC of 32, measured in accordance with ASTM E413.

PART 3 – EXECUTION

3.01 INSTALLATION

A. Separate dissimilar metals. Protect against galvanic action.

B. Frames:
1. Anchorage and Connections: Secure to adjacent construction. Where practical, interior door frames shall be flush with the pull side wall to minimize or eliminate the reveal and allow full 180 degree door swing.
2. Install frames in accordance with manufacturer’s instructions and install labeled frames in accordance with NFPA 80.
3. Frame Spreader Bars: Leave intact until frames are set perfectly square and plumb and anchors are securely attached.
4. Remove hardware, with the exception of prime-coated items, tag box, and reinstall after finish paint work is completed. Do not remove or paint over labels on labeled frames.

C. Doors:
1. Install hardware in accordance with hardware manufacturer's templates and instructions.
2. Install doors in accordance with manufacturer’s instructions and install labeled doors in accordance with NFPA 80.
3. Adjust operable parts for correct function.
4. Remove hardware, with the exception of prime-coated items, tag, box, and reinstall after finish paint work is completed. Do not remove or paint over labels on labeled doors.

3.02 ADJUST AND CLEAN

A. Adjust doors for proper operation, free from binding or other defects.

B. Clean and restore soiled surfaces.

C. Remove packaging, scraps and debris, and leave site in clean condition.

END OF SECTION 08 11 13

SECTION 08 14 23 - PLASTIC-LAMINATE-FACED WOOD DOORS

PART 1 – GENERAL

1.01 RELATED WORK

A. Section 08 11 13, Hollow Metal Doors and Frame, for door frames.

B. Section 08 71 00, Finish Hardware

C. Section 08 80 00, Glazed Systems: Vision glazing types for factory glazing.

D. Section 09 91 00, Painting, for painting of glass stops to match door frames.

1.02 REFERENCES

A. Architectural Woodwork Institute (AWI)

B. National Fire Protection Association (NFPA)
1. 80, Fire Doors and Fire Windows
2. 252, Fire Tests of Door Assemblies

C. Underwriters Laboratories (UL)
1. Building Materials Directory
2. Listing and Labeling
3. 10 (c), Fire Tests of Door Assemblies - Positive Pressure

D. Intertek Testing, Services (Warnock Hersey, Inc. (WHI))
1. Certification Listings for Fire Doors

1.03 SUBMITTALS

A. Product Data:
1. Manufacturer's specifications and other data needed to prove compliance with specified requirements.
2. Manufacturer's installation instructions.

B. Shop Drawings:
1. Show or schedule location, size, thickness, elevation, details of construction, location and extent of hardware blocking, fire rating, and other pertinent data for each door required.
2. Include schedule of hardware preparation required for each door.
3. Indicate requirements for veneer matching.

C. Samples: Plastic laminate in colors and patterns for Architect's selection.

1.04 QUALITY ASSURANCE

A. Perform Work in accordance with AWI Quality Standards, Custom Grade A.

1.05 PRE-INSTALLATION CONFERENCE

A. Refer to Section 01 31 00, Project Management and Coordination.

1.06 DELIVERY, STORAGE AND HANDLING

A. Deliver to site, store, protect, and handle doors in accordance with AWI Quality Standards and manufacturer's instructions. Accept doors on site in manufacturer's standard packaging. HVAC systems shall be operating and balanced prior to arrival of doors. Acceptable humidity shall be no less than 25 percent nor greater than 55 percent.

B. Storage:
1. Store doors in a clean and dry location protected from weather and abuse.
2. Stabilize moisture content prior to installation.

C. Mark each door on the top or in the top hinge with opening numbers corresponding to approved shop drawings.

1.07 WARRANTY

A. Provide for lifetime replacing, including cost of rehanging and refinishing, at no cost to Owner, wood doors exhibiting defects in materials or workmanship including, but not limited to the following:
1. Warp in excess of 1/4 inch as defined by AWI.
2. Warp or twist to a degree that door will not operate properly.
3. Delamination of face.
4. Telegraphing or show through of stiles, rails, or core greater than 0.01 inch in any 3-inch area.

PART 2 – PRODUCTS

2.01 APPROVED MANUFACTURERS

A. Manufacturers listed or named in the specifications who produce equivalent products to those specified are approved for use on the Project. Other manufacturers must have a minimum of 5-years experience manufacturing equivalent products to those specified and comply with requirements of Division 1 regarding substitutions to be considered.
1. Doors:
   a. American Door Products (VT Industries)
   b. Eggers Industries
   c. Ideal Architectural Door & Plywood
   d. Marshfield Doors Systems, Inc.
   e. Oshkosh Architectural Door Company
2. Plastic Laminate:
   a. Formica Corp.
   b. Nevamar, International Paper, Decorative Products Division
   c. Wilsonart International

2.02 MATERIALS

A. Flush Interior Non-Rated Wood Doors:

1. General: 3-ply AWI PC-HPDL-3 High Pressure Decorative Laminate (HPDL), Bonded Particle Core, stile and rails abrasively planed as an assembly prior to laminating, factory machine and fit.
2. Thickness: 1-3/4 inch.
3. Core: 32 lbs per cubic foot particleboard, 1LD2 in accordance with ANSI A208.1
4. Stile: LSL, 1-3/8 inch, bonded to core
5. Rail: LSL, bonded to core, 1-1/8 inch minimum, 5 inch head rail for closer reinforcement.

B. Mineral Core:
1. Meet applicable requirements of Paragraph A above.
2. Core: Asbestos-free, incombustible mineral sections - 45, 60, or 90-minute fire-rated, positive pressure Category A.
3. Stiles and Rails: Manufacturers thickness to achieve rating.

C. Accessories:
1. Glazing: Factory glaze with glass as indicated. Verify compatibility of glazing system with positive pressure requirements where applicable.
2. Glass Stops: Glass stops, if any, shall be wood to match door. Stops prepared for countersink style tamper proof screws. Size for 6-inch by 36-inch vision glass, unless noted otherwise. Color will be approved by Architect.
3. Adhesive: Type 1, hot pressed
4. Hardware Blocking: Provide structural composite lumber or solid lumber as required. Coordinate with hardware as scheduled.
5. Plastic Laminate: 0.050-inch thick, as selected by Architect from manufacturer's full range of colors.
6. Seal top, bottom and cut surface of openings at factory with two (2) coats of varnish.
7. Vertical door edges shall be factory painted to match door face. Factory shall supply matching paint and edges shall be touched-up in field.

PART 3 – EXECUTION

3.01 INSTALLATION

A. Doors and hardware installed under Section 06 10 00, Rough Carpentry. Follow manufacturer's printed instructions. Coordinate work with door opening construction, and door and frame hardware installation.

B. Clearances:
1. Head and Jambs: 1/8-inch maximum.
2. Sill: 1/2-inch typically, except provide 1/4-inch clearance from top surface of carpeting.

C. Verify that frames comply with indicated requirements for type, size, location and swing characteristics and that the frames are installed plumb, level and parallel. Reject doors with defects that are not repairable.

D. Coordinate hardware installation for proper door operation. Adjust locks and latches to engage snugly without forcing. Align hardware to function without squeaking, binding, or racking. Mortise as required for automatic door bottoms.

E. Protect doors from damage and replace doors that are damaged. Verify that tops and bottoms of doors have been sealed prior to installation, as required for warranty.

3.02 CLEANING AND REPAIRING

A. Clean doors in accordance with manufacturer's instructions.

B. Repair or replace damaged doors at no expense to Owner.

END OF SECTION 08 14 23

SECTION 08 31 13 – ACCESS DOORS

PART 1 - GENERAL

1.01 SUMMARY

A. Access doors in gypsum board, masonry partitions, and plaster/stucco soffits, where shown or required.

1.02 SUBMITTALS

A. Product Data
   1. Manufacturer's literature, including schedules, charts, and illustrations to indicate the performance, fabrication, procedures, product variations, and accessories.
   2 . Manufacturer's installation instructions.

PART 2 - PRODUCTS

2.01 ACCEPTABLE MANUFACTURERS

A. Manufacturers listed whose products meet or exceed the specifications are approved for use the Project. Other manufacturers must have a minimum of five (5) years experience manufacturing access doors meeting or exceeding the specifications and comply with Division 1 requirements regarding substitutions in order to be considered.
   1. Acudor products, Inc., Cedar Grove, NJ
   2. Babcock-Davis (Cierra Products), Brooklyn Park, MN
   3. Bar-co, Alfab, Inc., Enterprise, AL
   4. J.L. Industries, Incorporated, Bloomington, MN
   5. Karp Associates, Inc. Maspeth, NY
   6. Larsen's Manufacturing Company, Minneapolis, MN
   7. Milcor LP, Holland, OH
   8. Nystrom Building Products Co., Inc., Minneapolis, MN
   9. The Williams Brothers Corporation of American, Front Royal, VA

B. Specifications are based on products of the Babcock-Davis, Brooklyn Park, MN; (888) 412-3726.

2.02 PRODUCTS

A. General: The following access panel types are for selection as required whether or not indicated on drawings, unless indicated elsewhere in Divisions 22-26. The contractor shall evaluate the specific requirements and provide the appropriate system based on the condition, as all types may not be required on the project. The inclusion of any of the listed access panel types does not necessarily imply that the condition exists in the scope of the work.

B. Standard type flush steel door for exterior masonry construction:
   1. Size: 2-feet 0-inches x 3-feet 0-inches unless otherwise noted in drawings or specifications.
   2. Hinges: Stainless steel concealed continuous piano type hinges.
   3. Frames: 6063-T5 extruded aluminum frame. Mill finish.
   4. Doors: 20 gauge galvanized steel. Phosphate dipped and prime coated for filed

painting per Section 09 91 00.
5. Latch and Lock: Two (2) dual acting handles with exterior lock.
6. Gasketing: Extruded santoprene
7. Insulation: 2-inch thick fiberglass
8. Approved Product: Model "B-XT", or architect approved equal.

C. Standard type flush steel door for wallboard and masonry construction:
1 . Size: 2-feet 0-inches x 3-feet 0-inches unless otherwise noted in drawings or specifications.
   a. Provide 12-inch x 12-inch access panels at all motorized overhead coiling doors, grilles, and coiling counter doors that are located within non-removable ceilings for access to motors for repairs and maintenance of electric operators.
2. Hinges: Concealed continuous piano type hinges.
3. Finish: Phosphate dipped and prime coated for field painting per Section 09 91 00.
4. Frames: 16 gauge galvanized steel with 22 gauge galvanized wallboard corner bead.
5. Doors: 14 gauge galvanized steel.
6. Lock: Flush screw driver operated cam.
7. Approved Product: Model "B-NW", or Architect approved equal.

D. Standard type flush steel door for plaster/stucco soffit construction:
1. Size: As shown on drawings.
2. Hinges: Concealed continuous piano type hinges.
3. Finish: Phosphate dipped and prime coated for field painting per Section 09 91 00.
4. Frames: 16 gauge galvanized steel with 22 gauge galvanized plaster casing bead.
5. Doors: 14 gauge galvanized steel.
6. Lock: Flush screw driver operated cam.
7. Approved Product: Model "B-NP", or Architect approved equal

E. Fire rated flush steel door for wallboard construction:
1. Listing: UL listed 'B' label up to 1½- hours in walls and Warnock-Hershey listed up to 3 hours in ceilings.
2. Size: As shown on the drawings.
3. Hinges: Concealed pin hinge.
4. Finish: Phosphate dipped and prime coated for field painting per Section 09 91 00.
5. Frames: 16 gauge galvanized steel with 22 gauge galvanized wallboard corner bead.
6. Doors: 20 gauge galvanized steel.
7. Lock: Knurled knob/key operated latch bolt.
8. Approved Product: Model "B-IW", or Architect approved equal.

F. Insulated access panel for valve box in exterior masonry wall:
1. Size: 12-inches x 12-inches, or as required for application.
2 . Door: 0.060 6063-T5 extruded aluminum.
3. Frame: 0.060 6063-T5 extruded aluminum.
4. Hinge: Stainless steel concealed piano hinge.
5. Latch: Hex head cam latch operable with standard alien wrench.
6. Flange: 0.080 6063-T5 extruded aluminum.
7. Finish: Paint grip.
8. Insulation: two (2) inch thick fiberglass.
9. Gasket: Extruded Sanoprene.
10. Approved Product: Model "B-XT", or Architect approved equal.

PART 3 – EXECUTION

3.01 INSTALLATION

A. Located and provide panels to the trade that is constructing the material being penetrated.

3.02 LOCATIONS

A. Provide where required by code and where needed to service and maintain equipment.

B. If not shown on the drawings, consult the Architect before locating the finished spaces.

END OF SECTION 08 31 13

SECTION 08 35 13 – FOUR FOLD DOORS

PART 1 - GENERAL

1.01 RELATED DOCUMENT:

A. Drawing and general provisions of contract, including general and supplementary conditions and division 1 specification section, apply to this section.

1.02 WORK INCLUDED:

A. Provide all labor, equipment, materials, and services required to execute and complete all items of work in connection with Furnishing and Installing the Four Fold Doors described herein. All work shall be in accordance with the specifications and drawings.

B. RELATED SECTIONS INCLUDING THE FOLLOWING:
1. Division 9 Section “Painting” for field-applied paint finish.
2. Division 16 Section “Conductors and Cables” for electrical service and connections for powered operators and accessories.
3. Division 16 Section “Disconnect Switches and Circuit Breakers” for disconnect switches and circuit breakers for powered operators.

1.03 DEFINITIONS

A. Operation Cycle: One complete cycle of a door begins with the door in the closed position. The door is then moved to the open position and back to the closed position.

1.04 PERFORMANCE REQUIREMENTS

A. Structural Performance: Provide four fold doors capable of withstanding the effects of gravity loads and the following loads and stresses without evidencing permanent deformation of door components:
1. Wind Load: Uniform pressure (velocity pressure) of 120 mph or 37lbf/sq. ft. acting. Inward and outward.

B. Operation-Cycle Requirements: Design four fold door components and operator to operate for not less than 100,000 cycles.

1.05 GUARANTEE

A. Provide to the Owner a written guarantee, warranting the doors against any defects or materials and/or workmanship for the new door for a period of one year. With proper maintenance, commencing from the date of final acceptance of the project. Motors shall be guaranteed for a period of two years. State that all door and control work that becomes defective during the guarantee period shall be repaired promptly, to the requirements of these Specifications and at no cost to the Owner.

1.06 QUALITY ASSURANCE

A. Installation work shall be only carried out by the unit manufacturer or by an approved installation specialist approved by the unit manufacturer.

B. Source Limitations: Obtain four fold doors through one source from a single manufacturer.
   1. Obtain operators and controls from the four fold door manufacturer.

1.07 REQUIREMENTS OF REGULATORY AGENCIES

A. Equipment and installation shall comply with local, state, and federal laws and other mandatory requirements. Be responsible to insure an installation which is in compliance with such laws and regulations and all changes or alternations required by the authorized inspector or the authority having jurisdiction to be made without increase of subcontract price. Systems shall bear labeling for electrical equipment form the following standards:
   1. Underwriters Laboratory 508 Electrical standards.

1.08 PRODUCT DELIVERY, STORAGE AND HANDLING

A. Deliver materials in sequence to meet the installation schedule and arrange ahead for off-the-ground, covered storage locations. Only materials scheduled to be erected within 24 hours may be stored on site. Other materials will have to be stored off site.

B. Handle components with care. Protect against damage, dirt, disfigurement and weather.

C. Protect other work resulting from work of this Section. Replace work, which cannot be satisfactorily repaired or restored at no additional cost to the Owner.

1.09 SUBMITTALS

A. Submit detailed shop drawings of all work, and list the location in the building for each door. Clearly show and describe in detail, detailed door assemblies, and adjacent construction, including elevations, sections, and details of door, track, hardware, and operating components, dimensions, finished and relationship of door, frames, track, hardware and operating components to adjacent construction.

B. Submit printed operation instructions and maintenance data for the doors as follows:
   1. Wiring diagrams: “as built” straight line wiring and schematic diagrams showing electrical connections and control circuitry.
   2. Instructions showing operation.
   3. Lubrication chart indicating lubrication points and type of lubricant recommended for equipment.

PART 2 - PRODUCTS

2.01 MANUFACTURERS AND PRODUCTS

A. Manufacturer: Subject to compliance with requirements. Provide products as manufactured by Door Engineering and Manufacturing (800) 959-1352, or approval equal by the Architect and Owner.

B. Basis of Design Model No. FF700

C. Doors shall be of steel construction, and of four fold type as indicated on contract drawings.

2.02 DOOR DESIGNS

A. Design doors to withstand horizontal wind loads in closed position of 120 mph or 37 pounds per square foot positive and negative wind load. Maximum deflection under full design load shall be 1/120 of the span.

B. Design steel frame surround (jamb and header) to mount by-folding doors. Steel plate to encompass hinges and to be fastened to withstand horizontal wind loads and loads applied from doors and door movement. Paint frames as directed by Architect.

2.03 MATERIALS

A. Provide electricity operated insulated with safety controls and provision for manual operation in case of power failure.

2.04 DOOR MATERIAL AND CONSTRUCTION

A. Stiles and rails shall be of structural steel tubing, not smaller than 4”x3”x 3/16” with all joints welded and ground smooth. Bracing shall consist of horizontal and vertical tubular sections, to adequately stiffen the door panels.

B. Door leaves shall be faced on the exterior side with 14-gauge sheet steel welded to stiles, rails, and bracing members from the inside. There shall be no exposed welds on exterior panels. All exterior doors shall be fully insulated with fiberglass thermal insulation, full thickness of panel: door shall be covered on the inside with 14-gauge sheet steel welded to stiles, rails and bracing members. All interior welds are to be ground smooth.

C. Door lites shall be configured as shown on drawings.

D. Operating Hardware:
   1. All hardware shall be heavy duty, industrial type. Hardware shall include guide tracks, brackets, trolleys, center guide jamb and fold hinges, bolts, nuts and all fasteners etc. Guide track shall be formed from 3/16” steel plate. Trolleys to include horizontal and vertical rollers fitted with anti friction bearings.
   2. Jamb & Fold Hinges are fitted with “Timken” thrust bearings and needle roller radial bearings. The hinge pintel shall not be less than 1 ¼” diameter solid steel. All hinges are equipped with grease fittings.
   3. Doors with motor-operators shall have fail-safe safety edges on the leading edges of both leading leaves.

E. Weather stripping shall be provided and installed along the bottom of watch leaf and at vertical joints of leaves at centerline, to provide a substantially weather tight installation. Weather strip material shall be cloth inserted neoprene adjustable and readily replaceable.

F. Vision panels shall be provided in the door leaves of the type, size, and location as indicated on the drawings.

2.05 DOOR FINISHES

A. Sand blasted and Factory Applied Exterior grade POWDERCOAT, color as selected by customer using “RAL” standard.

2.06 OPERATOR

A. Four Fold door shall be operated by an overhead mounted electro-mechanical drive unit, designed for heavy duty operation. Operator consists of a single electric geared brake motor, and rotating drive arm. The door shall be operated with connecting rods attached to the rotating drive arm on the operator and to control arms attached to the jamb door sections and to the door lintel. The connecting rods shall be positive drive, keeping the door under firm control at all times. The connecting rods shall be fitted with spherical bearings and control arms shall be fitted with permanently lubricated ball bearings.

Operator shall open and close door with smooth acceleration and deceleration, easily and quietly without jarring under all conditions of wind pressure. Operator shall be adjustable to allow door to clear the opening. Operator shall automatically lock the door in the closed position. Operator shall be equipped with disconnect mechanism to convert to freewheeling mode for manual operation. Motor, brake, and open and close limit switched are to factory mounted and pre-wired to a terminal block in a NEMA 12 enclosure mounted on door operator. All materials necessary for pre-wired assembly shall conform to J.I.C. electrical standards for equipment and connections. The door contractor shall furnish and install the electric door operator including the motor, with “open-close” limit switches, hand chain disconnect switched, solenoid, brake, all pre-wired to a terminal box mounted adjacent to the motor.

B. Motor shall be 220/440 volt, 3 phase, 60 cycle, totally enclosed, ball bearing, continuous duty and of capacity sufficient to operate the door at specified speed without exceeding a temperature rise of 55 degrees Celsius. Braking device to be operated automatically by a solenoid and be adjustable to suit the requirements of the door.

C. Comply with NFPA 70 and NEC

D. Electric Controls: Controls shall be furnished by the door manufacturer and shall be built in accordance with the latest NEMA/NEC standards. The control panel shall bear U.L. Label. (Per UL 508). Control circuits shall not exceed a nominal 110 volts.

1. Controls shall include Variable Frequency drive factory wired with overload and under voltage protection and equipped with mechanical an electrical interlocks, and with the control transformer, necessary relays, timers, etc.
2. Enclosure shall be NEMA 12 with Fusible disconnect. All control components shall be mounted inside the enclosure with a wiring diagram placed inside the enclosure in a pocket.
3. Push buttons for operating station shall be momentary pressure three-button station marked “OPEN, CLOSE, and STOP”. Push button enclosure shall be NEMA4.
4. Limit switches shall be provided to stop the travel of the door in its fully open or fully closed positions.
5. Photo Eyes: Door to be equipped with a minimum of one set of transmitter/receiver style photo eyes to prevent automatic door closing when vehicle is passing.

6. Radio Control: Provide (2) radio receiver and (4) transmitters per door.

2.07 REVERSING FAIL SAFE ASFETY EDGE

A. Door manufacturer shall provide and install a rubber-encased, reverse action safety mechanism on the electrically-operated four-fold doors leading edges. The system is continuously energized and operates through the electrical system to stop the closing travel of the door on contact with an obstruction, providing an instantaneous reversal of the door travel to the full open position. Failure of any component prevents closing of door. A multi-conductor cord from an electrical junction box on the lead door leaf is provided for the safety edge. The safety edge system shall be catalog #IDI-FSSE-2K as manufactured by International Door, Inc.

2.08 WIRING

A. Door Manufacturer shall supply controls only. Electrical contractor shall install controls and furnish and install conduits and wiring,

PART 3 - EXECUTION

3.01 INSTALLATION

A. Installation of the four - doors shall be by the manufacturer or a duly authorized agent who is qualified to do this installation. The four- door installer shall be responsible for mounting the door guides and hanging the door panels plumb and true with weather-stripping. The door installer will make the final adjustments of the limit switched to ensure proper operation of the doors.

B. The door manufacturer shall have total responsibility for the installation of the doors.

C. Koil Kords or S.O. Cords: The Fail Safe Safety Edge shall be wired with koil kords or S.O. cords. Koil Kords or S.O. Cords shall be furnished by door manufacturer.

3.02 ADJUSTING

A. Test and adjust controls and safeties. Replace damaged and malfunctioning controls and equipment.

B. Any repairs that required an account of faulty materials, workmanship, design or door construction shall be made at no additional charge to the Owner.

3.03 DEMONSTRATION

A. Startup Services: Engage a factory-authorized service representative to perform startup services and to train Owner's maintenance personnel as specified below:
1. Train Owner's maintenance personnel on procedures and schedules related to startup and shutdown, troubleshooting, servicing preventive maintenance and procedures for testing and resetting release devices.

2. Review data in the maintenance manuals. Refer to Division 1 Section “Contract Closeout”.
3. Schedule training with Owner with at least 7 days advance notice.

END OF SECTION 08 35 13

SECTION 08 36 00 - SECTIONAL OVERHEAD DOORS

PART 1 - GENERAL

1.1 SECTION INCLUDES

A. Sectional overhead doors of the following types:
   1. Ribbed steel doors, thermally-broken, polyurethane insulated. (Model 3724)
   2. Electric door operators

1.2 RELATED SECTIONS

A. Section 05500 - Metal Fabrications: Steel channel opening frame.

B. Section 06100 - Rough Carpentry: Rough wood framing and blocking for door opening.

C. Section 08710 - Door Hardware: Lock cylinders.

D. Section 11150 - Parking Control Equipment: Remote door control.

E. Division 16 Sections: Electrical service and connections for powered operators.

1.3 REFERENCES

A. ASTM A 653/A 653M - Specification for Steel Sheet, Zinc-Coated (Galvanized) or Zinc-Iron Alloy-Coated (Galvannealed) by the Hot-Dip Process.

B. ASTM A 924/A 924M - Specification for General Requirements for Steel Sheet, Metallic-Coated by the Hot-Dip Process.

C. ASTM B 209/209M - Specification for Aluminum and Aluminum-Alloy Sheet and Plate.

D. ASTM B 221/221M - Specification for Aluminum and Aluminum-Alloy Extruded Bars, Rods, Wire, Profiles, and Tubes.

1.4 SUBMITTALS

A. Submit under provisions of Section 01300.

B. Manufacturer's data sheets on each product to be used, including:
   1. Preparation instructions and recommendations.
   2. Storage and handling requirements and recommendations.
   3. Installation methods.
   4. Operation and maintenance data.
   5. Nameplate data and ratings for motors.

C. Shop Drawings: Include opening dimensions and required tolerances, connection details, anchorage spacing, hardware locations, and installation details.

D. Selection Samples: For each finish specified, two complete sets of color chips representing manufacturer's full range of available colors and patterns.

E. Verification Samples: For each finish specified, two samples, minimum size 6 inches (150 mm) square, representing actual product, color, and patterns

1.5 WIND PERFORMANCE REQUIREMENTS

A. Design doors to withstand positive and negative wind loads as calculated in accordance with applicable building code.
1. Design Wind Load: 32 lb/sf
2. Safety Factor: 1.5 times design wind load

1.6 QUALITY ASSURANCE

A. Manufacturer Qualifications: Company specializing in manufacturing the types of doors specified in this section, with not less than ten years of documented experience

B. Installer Qualifications: Company specializing in installing the types of products specified in this section, with minimum of five years of documented experience, and approved by the door manufacturer

1.7 WARRANTY

A. Finish Warranty: Provide manufacturer's standard finish warranty against rust through.
1. Warranty period: 10 years

B. Delamination Warranty: Provide manufacturer's standard warranty against delamination.
1. Warranty period: 10 years

PART 2 PRODUCTS

2.1 MANUFACTURERS

A. Acceptable Manufacturer: Clopay Building Products Company, which is located at: 8585 Duke Blvd. ASD; Mason, OH 45040-3101; Toll Free Tel: 800-526-4301 prompt #3; Fax: 888-434-3193; Email: CIA@clopay.com Web: www.clopaycommercial.com

B. Substitutions: Submit qualifications prior to bid date for substitutions

C. Requests for substitutions will be considered in accordance with Section 01 25 13

2.2 LIGHT RIBBED STEEL DOORS, THERMALLY-BROKEN, POLYURETHANE INSULATED

A. Door Construction:

1. Panels: Foamed in place Polyurethane core construction between exterior and interior steel skins.
2. Steel Skins: Formed from roll formed commercial or drawing quality steel sheet, hot-dip galvanized per ASTM A 924/A 924M and ASTM A 653/A 653M, pre-painted with primer and baked-on polyester topcoat; sections formed to create weather tight tongue-in-groove meeting joint.
3. Reinforcing: Galvanized and primed steel reinforcement located under each hinge location, pre-punched for hinge attachment.
4. Handle: High impact polymer step plate/lift handle on bottom panel section.

B. Premium Duty 2-inches (51 mm) Door: Clopay Model 3724.
1. Maximum Door Size: 32ft, 2 inches (9.8 m) wide by 26 ft (7.9 m) high
    a. Reference drawings for door dimensions
2. Overall Panel Thickness: 2-inches (51 mm).
3. Steel Skin Thickness: Minimum 24 gauge 0.022 inch (0.56 mm) exterior; minimum 28 gauge 0.015 inch (0.38 mm) interior.
4. End Stiles: Galvanized steel end stiles, engineered for easy hardware attachment through pre-punched holes. Minimum 18 gauge, 0.045 inch (1.14 mm) thick for single end hinge style and 16 gauge .056 inch (1.42 mm) minimum for double end hinge style.
5. Astragal: U-shaped flexible PVC in retainer of full-length 0.055-inch (1.4 mm) rigid PVC.
6. Thermal Resistance (R-value): 18.4 deg F hr sq ft/Btu (3.0 (K sq m)/W); calculated door section R-value in accordance with DASMA TDS-163.
7. Windows: Full vision aluminum section, pre-painted to match door finish.
    a. Glazing: 1/2-inch (12 mm) insulated tempered glass.
8. Finish: Interior stucco embossed texture with shallow U ribbed pattern, white interior color. Exterior stucco embossed with light ribbed pattern, white exterior color.
9. Locking: Inside spring loaded slide bolt lock on end stile that engages slot in track.
    a. Provide two inside slide lock.
10. Weatherstripping: Provide complete perimeter seals. Provide flexible top seal, flexible jamb seal and U shaped bottom seal.
11. Tracks: Vertical tracks minimum 0.061-inch (1.55 mm) galvanized steel tapered and mounted for wedge type closing. Horizontal tracks minimum 0.075-inch (1.91 mm) galvanized steel, reinforced with minimum 0.0897-inch (2.28 mm) galvanized steel angles as required:
    a. Provide standard lift tracks with 15-inches (381 mm) radius track as indicated.
12. Spring Counterbalance: Torsion spring counterbalance mechanism sized to weight of the door, with a helically wound, oil tempered torsion spring mounted on a steel shaft; cable drum of die cast aluminum with high strength galvanized aircraft cable with minimum 7 to 1 safety factor.
    a. High Cycle Spring: 100,000 cycles.

2.3 ELECTRIC DOOR OPERATORS

A. General: Provide electric door operator provided by door manufacturer for door with operational life specified complete with electric motor and factory pre-wired motor controls, starter, gear-reduction unit, clutch, remote-control stations, control

devices, integral gearing for locking door, and accessories required for proper operation. Comply with NFPA 70.

1. Solenoid-operated brake

B. Disconnect Device: Provide hand-operated disconnect or mechanism for emergency manual operation while disconnecting motor, without affecting timing of limit switch. Mount disconnect and operator, so they are accessible from floor level. Include interlock device to automatically prevent motor from operating when emergency operator is engaged.

C. Design operator so motor may be removed without disturbing limit switch adjustment and without affecting emergency auxiliary operator.

D. Provide control equipment complying with NEMA ICS1, NEMA ICS 2, and NEMA ICS 6, with NFPA 70 Class 2 control circuit, maximum 24-V, AC or DC.

E. Electric Motors: Provide high-starting torque, reversible, continuous-duty, Class A insulated, electric motor, complying with NEMA MG 1, with overload protection, sized to start, accelerate, and operate door in either direction, from any position, at not less than 2/3 fps (0.2 m/s) and not more than 1 fps (.03m/s), without exceeding nameplate ratings or considering service factor.

1. Type: Jackshaft.
2. HP:
    a. 3/4hp (559 W).
3. Power Characteristics:
    a. 220 V.
    b. 3-phase.
4. Service Factor:
    a. NEMA 9 waterproof.
5. Coordinate wiring requirements and electrical characteristics of motors with building electrical system.

F. Remote Control Station: Provide momentary contact, 3-button control station with push - button controls labeled "Open", "Close" and "Stop" adjacent to each door and at local gang of switches.

G. Provide interior units, fully guarded, surface mounted, heavy-duty type, with general-purpose NEMA ICS 6 enclosure in one of the following types:

1. Enclosure Type: Type 4.

H. Obstruction Detection Device: Provide each motorized door with indicated external automatic safety sensor able to protect full width of door opening. Activation of sensor immediately stops and reverses downward door travel.

1. Sensor Edge: Provide each motorized door with an automatic safety sensing edge, located within astragal or weather stripping mounted to bottom bar. Contact with sensor immediately stops and reverses downward door travel. Connect to control circuit using manufacturer's standard take-up reel or self-coiling cord. Sensing edge shall be operated by:
    a. Electric Fail safe.
2. Photo-electric control: Provide each motorized door with (2) photo-electric devices that will stop and reverse the downward door travel if the light beam is broken or blocked. Coordinate with Owner for mounting heights. Device

shall be:

a. NEMA Type 4.

I. Limit Switches: Provide adjustable switches, interlocked with motor controls and set to automatically stop door at fully opened and fully closed positions.

J. Radio Controls: Provide 3 button radio transmitter to provide remote open, close, stop functionality.

1. Provide external antenna and coaxial wiring to receiver to enhance radio control reception.
2. Provide 2 controls per motor

K. Provide auxiliary chain hoist: for emergency, manual operation while disconnecting motor, without affecting timing of limit switch. Mount disconnect and operator so they are accessible from floor level. Include interlock device to automatically prevent motor from operating when emergency operator is engaged.

PART 3 EXECUTION

3.1 EXAMINATION

A. Examine wall and overhead areas, including opening framing and blocking, with installer present, for compliance with requirements for installation tolerances, clearances, and other conditions affecting performance of Work in this Section.

1. Proceed with installation only after unsatisfactory conditions have been corrected.

B. If substrate preparation is the responsibility of another installer, notify Architect of unsatisfactory preparation before proceeding.

3.2 PREPARATION

A. Prepare surfaces using the methods recommended by the manufacturer for achieving the best result for the substrate under the project conditions.

3.3 INSTALLATION

A. Install overhead doors and track in accordance with approved shop drawings and the manufacturer's printed instructions.

3.4 PROTECTION

A. Protect installed products until completion of project.

B. Touch-up, repair or replace damaged products before Substantial Completion.

END OF SECTION 08 36 00

SECTION 08 71 00 - DOOR HARDWARE

PART 1 - GENERAL

1.1 SUMMARY

A. Section Includes**:**
1. Door hardware.
2. Storefront and entrance door hardware.
3. Battery-powered electronic credential access control locks and panic hardware level trim.
4. Card Access control system.
5. Cylinders for doors fabricated with locking hardware.

B. Related Divisions**:**
1. Division 06 – door hardware installation
2. Division 07 – sealant at exterior thresholds
3. Division 08 – metal doors and frames, interior aluminum frames, wood doors, integrated security systems, specialty doors, storefront and glazed curtainwall systems.
4. Division 10 – operable partitions
5. Division 21 – fire and life safety systems
6. Division 28 – security access systems

C. Specific Omissions**:** Hardware for the following is specified or indicated elsewhere.
1. Windows.
2. Cabinets, including open wall shelving and locks.
3. Signs, except where scheduled.
4. Toilet accessories, including grab bars.
5. Installation.
6. Rough hardware.
7. Conduit, junction boxes & wiring.
8. Folding partitions, except cylinders where detailed. Sliding aluminum doors, except cylinders where detailed.
9. Access doors and panels, except cylinders where detailed.
10. Corner Guards.
11. Welded steel gates and supports.

1.2 REFERENCES:

A. Use date of standard in effect as of Bid date.
1. American National Standards Institute – ANSI 156.18 – Materials and Finishes.
   a. ICC/ANSI A117.1 - 2009 – Specifications for making buildings and facilities usable by physically handicapped people.
   b. ANSI A156.18 Materials and Finishes
2. ADAAG – Americans with Disabilities Act Accessibility Guidelines of 2010
3. BHMA – Builders Hardware Manufacturers Association
4. DHI – Door and Hardware Institute
5. NFPA – National Fire Protection Association
   a. NFPA 80 – Fire Doors and Windows

b. NFPA 105 – Smoke and Draft Control Door Assemblies
c. NFPA 252 – Fire Tests of Door Assemblies

6. UL – Underwriters Laboratories
   a. UL10C – Positive Pressure Fire Tests of Door Assemblies.
   b. UL 305 – Panic Hardware
7. WHI – Warnock Hersey Incorporated
8. Local applicable codes
9. SDI – Steel Door Institute
10. WI – Woodwork Institute
11. AWI – Architectural Woodwork Institute
12. NAAMM – National Association of Architectural Metal Manufacturers

D. Abbreviations
   1. Manufacturers**:** see table at 2.1.A of this section
   2. Finishes**:** see 2.7 of this section.

1.3 SUBMITTALS & SUBSTITUTIONS

A. SUBMITTALS**:** Submit six copies of schedule per Section 01330. Only submittals printed one sided will be accepted and reviewed. Organize vertically formatted schedule into "Hardware Sets" with index of doors and headings, indicating complete designations of every item required for each door or opening. Minimum 10pt font size. Include following information**:**
   1. Type, style, function, size, quantity and finish of hardware items.
   2. Use BHMA Finish codes per ANSI A156.18.
   3. Name, part number and manufacturer of each item.
   4. Fastenings and other pertinent information.
   5. Location of hardware set coordinated with floor plans and door schedule.
   6. Explanation of abbreviations, symbols, and codes contained in schedule.
   7. Mounting locations for hardware.
   8. Door and frame sizes, materials and degrees of swing.
   9. List of manufacturers used and their nearest representative with address and phone number.
   10. Catalog cuts.
   11. Point-to-point wiring diagrams.
   12. Manufacturer's technical data and installation instructions for electronic hardware.

B. Bid and submit manufacturer's updated/improved item if scheduled item is discontinued.

C. Deviations**:** Highlight, encircle or otherwise identify deviations from "Schedule of Finish Hardware" on submittal with notations clearly designating those portions as deviating from this section.

D. If discrepancy between drawings and scheduled material in this section, bid the more expensive of the two choices, note the discrepancy in the submittal and request direction from Architect for resolution.

E. Substitutions per Division 1. Include product data and indicate benefit to the Project. Furnish operating samples on request.

F. Items listed with no substitute manufacturers have been requested by Owner to meet existing standard.

G. Furnish as-built/as-installed schedule with closeout documents, including keying schedule, riser and point-to-point wiring diagrams, manufacturers' installation, adjustment and maintenance information, and supplier's final inspection report.

1.4 QUALITY ASSURANCE:

A. Qualifications:

1. Hardware supplier**:** direct factory contract supplier who employs a certified architectural hardware consultant (AHC), available at reasonable times during course of work for project hardware consultation to Owner, Architect and Contractor.
   a. Responsible for detailing, scheduling and ordering of finish hardware. Detailing implies that the submitted schedule of hardware is correct and complete for the intended function and performance of the openings.

B. Hardware**:** Free of defects, blemishes and excessive play. Obtain each kind of hardware (latch and locksets, exit devices, hinges and closers) from one manufacturer.

C. Exit Doors**:** Operable from inside with single motion without the use of a key or special knowledge or effort.

D. Fire-Rated Openings**:** NFPA 80 compliant. Hardware UL10C Standard 7-2 (positive pressure) compliant for given type/size opening and degree of label. Provide proper latching hardware, non-flaming door closers, approved-bearing hinges, and resilient seals. Coordinate with wood door section for required intumescent seals. Furnish openings complete.

E. Furnish hardware items required to complete the work in accordance with specified performance level and design intent, complying with manufacturers' instructions and code requirements.

1.5 DELIVERY, STORAGE AND HANDLING:

A. Delivery**:** coordinate delivery to appropriate locations (shop or field).
1. Permanent keys and cores**:** secured delivery direct to Owner's representative.

B. Acceptance at Site**:** Items individually packaged in manufacturers' original containers, complete with proper fasteners and related pieces. Clearly mark packages to indicate contents, locations in hardware schedule and door numbers.

C. Storage**:** Provide securely locked storage area for hardware, protect from moisture, sunlight, paint, chemicals, dust, excessive heat and cold, etc.

1.6 PROJECT CONDITIONS AND COORDINATION:

A. Where exact types of hardware specified are not adaptable to finished shape or size of members requiring hardware, provide suitable types having as nearly as practical the same operation and quality as type specified, subject to Architect's approval.

B. Coordination**:** Coordinate hardware with other work. Furnish hardware items of proper design for use on doors and frames of the thickness, profile, swing, security and similar requirements indicated, as necessary for proper installation and function, regardless of omissions or conflicts in the information on the Contract Documents. Furnish related trades with the following information**:**
1. Location of embedded and attached items to concrete.
2. Location of wall-mounted hardware, including wall stops.
3. Location of finish floor materials and floor-mounted hardware.
4. At masonry construction, coordinate with the anchoring and hollow metal supplier prior to frame installation by placing a strip of insulation, wood, or foam, on the back of the hollow metal frame behind the rabbet section for continuous hinges, as well as at rim panic hardware strike locations, silencers, coordinators, and door closer arm locations. When the frame is grouted in place, the backing will allow drilling and tapping without dulling or breaking the installer's bits.
5. Locations for conduit and raceways as needed for electrical, electronic and electro-pneumatic hardware items. Fire/life-safety system interfacing. Point-to-point wiring diagrams plus riser diagrams to related trades.
6. Coordinate: flush top rails of doors at outswinging exteriors, and throughout where adhesive-mounted seals occur.
7. Manufacturers' templates to door and frame fabricators.

C. Check Shop Drawings for doors and entrances to confirm that adequate provisions will be made for proper hardware installation.

D. Environmental considerations**:** segregate unused recyclable paper and paper product packaging, uninstalled metals, and plastics, and have these sent to a recycling center.

1.7 WARRANTY:

A. Part of respective manufacturers' regular terms of sale. Provide manufacturers' written warranties**:**

1.	Extra Heavy Duty Cylindrical Lock**:**	Ten Years
2.	Exit Devices**:**	Three years mechanical One year electrical
3.	Closers**:**	Ten years mechanical
4.	Hinges**:**	Ten years

1.8 COMMISSIONING:

A. Conduct these tests prior to request for certificate of substantial completion**:**
1. With installer present, test door hardware operation with climate control system and stairwell pressurization system both at rest and while in full operation.

2. With installer, access control contractor and electrical contractor present, test electrical, electronic and electro-pneumatic hardware systems for satisfactory operation.
3. With installer and electrical contractor present, test hardware interfaced with fire/life-safety system for proper operation and release.

PART 2 - PRODUCTS

2.1 MANUFACTURERS:

A. Manufacturers and their abbreviations used in this schedule**:**

GLY	Glynn-Johnson Hardware
IVE	H. B. Ives
KNC	K. N. Crowder
LCN	LCN Closers
SCE	Schlage Electronics
SCH	Schlage Lock Company
VON	Von Duprin
ZER	Zero International

2.2 HINGING METHODS:

A. Drawings typically depict doors at 90 degrees, doors will actually swing to maximum allowable. Use wide-throw conventional or continuous hinges as needed up to 8 inches in width to allow door to stand parallel to wall for true 180-degree opening. Advise architect if 8-inch width is insufficient.

B. Conform to manufacturer's published hinge selection standard for door dimensions, weight and frequency, and to hinge selection as scheduled. Where manufacturer's standard exceeds the scheduled product, furnish the heavier of the two choices, notify Architect of deviation from scheduled hardware.

C. Conventional Hinges**:** Steel or stainless steel pins and concealed bearings. Hinge open widths minimum, but of sufficient throw to permit maximum door swing.
1. Outswinging exterior doors**:** non-ferrous with non-removable (NRP) pins and secuirty studs.
2. Non-ferrous material exteriors and at doors subject to corrosive atmospheric conditions.

D. Continuous Hinges**:**
1. Geared-type aluminum.
   a. Use wide-throw units where needed for maximum degree of swing, advise architect if commonly available hinges are insufficient.
   b. If units are used at storefront openings, color-coordinate hinge finish with storefront color. Custom anodizing and custom powdercoat finishes subject to Architect approval.

2.2 LOCKSETS:

A. Extra Heavy Duty Cylindrical Locks and Latches: as scheduled.
1. Chassis: cylindrical design, corrosion-resistant plated cold-rolled steel, through-bolted.
2. Locking Spindle: stainless steel, integrated spring and spindle design.
3. Latch Retractors: forged steel. Balance of inner parts: corrosion-resistant plated steel, or stainless steel.
4. Latchbolt: solid steel.
5. Backset: 2.75 inches typically, more or less as needed to accommodate frame, door or other hardware.
6. Lever Trim: accessible design, independent operation, spring-cage supported, minimum 2.00 inches clearance from lever mid-point to door face.
7. Electric operation: Manufacturer-installed continuous duty solenoid.
8. Strikes: 16 gage curved steel, bronze or brass with 1.00 inch deep box construction, lips of sufficient length to clear trim and protect clothing.
9. Scheduled Lock Series and Design: Schlage ND series, SPA design.
10. Certifications:
    a. ANSI A156.2, 1994, Series 4000, Grade 1.
    b. UL listed for A label and lesser class single doors up to 4 feet x 8 feet.
11. Accepted substitutions: None.

2.3 EXIT DEVICES / PANIC HARDWARE

A. General features:
1. Independent lab-tested 1,000,000 cycles.
2. Push-through push-pad design. No exposed push-pad fasteners, no exposed cavities when operated. Return stroke fluid dampeners and rubber bottoming dampeners, plus anti-rattle devices.
3. Deadlocking latchbolts, 0.75 inch projection.
4. End caps: impact-resistant, flush-mounted. No raised edges or lips to catch carts or other equipment.
5. No exposed screws to show through glass doors.
6. Non-handed basic device design with center case interchangeable with all functions, no extra parts required to effect change of function.
7. Releasable in normal operation with 15-pound maximum operating force, and with 32-pound maximum pressure under 250-pound load to the door.

B. Specific features:
1. Non-Fire Rated Devices: cylinder dogging.
2. Lever Trim: breakaway type, forged brass or bronze escutcheon min. 0.130 inch thickness, compression spring drive, match lockset lever design.
3. Rod and latch guards with sloped full-width kickplates for doors fitted with surface vertical rod devices with bottom latches.
4. Fire-Labeled Devices: UL label indicating “Fire Exit Hardware”. Vertical rod devices less bottom rod (LBR) unless otherwise scheduled.
5. Inpact recessed devices: 1.25 inch projection when push-pad is depressed. Sloped metal end caps to deflect carts, etc. No pinch points to catch skin between touchbar and door.
6. Delayed Egress Devices: Function achieved within single exit device component, including latch, delayed locking device, request-to-exit switch, nuisance alarm, remote alarm, key

switch, indicator lamp, relay, internal horn, door position input, external inhibit input plus fire alarm input. NFPA 101 "Special Locking Arrangement" compliant.

7. Electrically Operated Devices**:** Single manufacturer source for electric latch retraction devices, electrically controlled trim, power transfers, power supplies, monitoring switches and controls.
8. Exit Device meeting this specification: Von Duprin 33A/99
9. Accepted substitutions: None.

2.4 CLOSERS

A. Surface Closers**:**

1. Full rack-and-pinion type cylinder with removable non-ferrous cover and cast iron body. Double heat-treated pinion shaft, single piece forged piston, chrome-silicon steel spring.
2. ISO 2000 certified. Units stamped with date-of-manufacture code.
3. Non-sized, non-handed, and adjustable. Place closer inside building, stairs, and rooms.
4. Plates, brackets and special templating when needed for interface with particular header, door and wall conditions and neighboring hardware.
5. Separate adjusting valves for closing speed, latching speed and backcheck, fourth valve for delayed action where scheduled.
6. Extra-duty arms (EDA) solid forged steel main arms and factory assembled heavy-duty forged forearms for parallel arm closers with parallel arm units at doors scheduled with parallel arm units.
7. Exterior door closers**:** tested to 100 hours of ASTM B117 salt spray test, furnish data on request.
8. Exterior doors**:** seasonal adjustments not required for temperatures from 120 degrees F to -30 degrees F, furnish checking fluid data on request.
9. Non-flaming fluid, will not fuel door or floor covering fires.
10. Pressure Relief Valves (PRV) not permitted.
11. Closer meeting this specification: LCN 4040XP
12. Accepted substitutions**: None.**

2.5 OTHER HARDWARE

A. Automatic Flush Bolts**:** Low operating force design.

B. Overhead Stops**:** Non-plastic mechanisms and finished metal end caps. Field-changeable hold-open, friction and stop-only functions.

C. Kick Plates**:** Four beveled edges, .050 inches minimum thickness, height and width as scheduled. Sheet-metal screws of bronze or stainless steel to match other hardware.

D. Door Stops**:** Provide stops to protect walls, casework or other hardware.

1. Unless otherwise noted in Hardware Sets, provide floor type with appropriate fasteners. Where floor type cannot be used, provide wall type. If neither can be used, provide overhead type.

E. Locate overhead stops for maximum possible opening. Consult with Owner for furniture locations. Minimum**:** 90deg stop / 95deg deadstop. Note degree of opening in submittal.

D. Seals**:** Adhesive type at head & jambs. Inelastic, rigid back, not subject to stretching. Self-compensating for warp, thermal bow, door settling, and out-of-plumb. Adhesive warranted for life of installation.
1. Proposed substitutions**:** submit for approval.

F. Thresholds**:** As scheduled and per details. Substitute products**:** certify that the products equal or exceed specified material's thickness. Proposed substitutions**:** submit for approval.
1. Saddle thresholds**:** 0.200 inches minimum thickness.

G. Exteriors**:** Seal perimeter to exclude water and vermin. Use sealant complying with requirements in Division 7 "Thermal and Moisture Protection". Minimum 0.25 inch diameter fasteners and lead expansion shield anchors, or Red-Head #SFS-1420 (or approved equivalent) Flat Head Sleeve Anchors (SS/FHSL).

H. Fire-rated openings, 3-hour duration**:** Thresholds, where scheduled, to extend full jamb depth.

I. Plastic plugs with wood or sheet metal screws are not an acceptable substitute for specified fastening methods.

J. Fasteners**:** Generally, exposed screws to be Phillips or Robertson drive. Pinned TORX drive at high security areas. Flat head sleeve anchors (FHSL) may be slotted drive. Sheet metal and wood screws**:** full-thread. Sleeve nuts**:** full length to prevent door compression.

K. Through-bolts**:** Verify with Architect. Coordinate with wood doors; ensure provision of proper blocking to support wood screws for mounting panic hardware and door closers. Coordinate with metal doors and frames; ensure provision of proper reinforcement to support machine screws for mounting panic hardware and door closers.
1. Exception**:** surface-mounted overhead stops, holders, and friction stays.

L. Silencers**:** Interior hollow metal frames, 3 for single doors, 4 for pairs of doors. Leave no unfilled/uncovered pre-punched silencer holes. Intent**:** door bears against silencers, seals make minimal contact with minimal compression – only enough to effect a seal.

2.6 FINISH:

A. Generally**:** BHMA 626 Satin Chromium Steel OR BHMA 630 Satin Stainless Steel.
1. Areas using BHMA 626: furnish push-plates, pulls and protection plates of BHMA 630, Satin Stainless Steel, unless otherwise scheduled.

B. Door closers**:** factory powder coated to match other hardware, unless otherwise noted.

1. Provide satin-chrome plated arms, tracks and covers where scheduled bright metallic powder coat (MTLPC) not available.

C. Finish designators used in appended hardware schedule**:**

ANSI	US	Description	Base Metal
600	USP	Primed For Painting	Steel
626	US26D	Satin Chromium Plated Over Nickel	Brass, Bronze
626AM	US26D	Satin Chromium Plated Over Nickel With Antimicrobial Coating	Brass, Bronze
628	US28	Satin Aluminum, Clear Anodized	Aluminum
630	US32D	Satin Stainless Steel	Stain. Steel 300 Ser
652	US26D	Satin Chromium Plated Over Nickel	Steel
689	US28	Aluminum Painted	Any
AL	US28	Aluminum Mill Finish	Aluminum
BLK		Black	Any
BRN		Dark Brown	Any
CL		Clear Anodized	Aluminum
GRY		Grey	Any

D. Seal color to be as selected by Architect.

2.7 KEYING REQUIREMENTS:

A. Key System**:** Schlage keyway, full size interchangeable core. For estimate use factory GMK charge. Initiate and conduct meeting(s) with Owner and Supplier representatives to determine system requirements and keybow styles. Furnish Owner's written approval of the system; do not order keys or cylinders without written confirmation of actual requirements from the Owner. Owner will receive permanent cores. Contractor will install permanent cores.

B. Keys
1. New factory registered master key system.

C. Construction keying**:** furnish temporary keyed-alike cores. Remove at substantial completion and install permanent cores in Owner's presence. Demonstrate that construction key no longer operates.

D. Furnish 10 construction keys.

E. Furnish 2 construction control keys.

G. Key Cylinders**:** furnish 6-pin solid brass construction.

H. Cylinder cores**:** furnish keyed at factory of lock manufacturer where permanent records are maintained. Locks and cylinders same manufacturer.

I. Permanent keys**:** use secured shipment direct from point of origination to Owner.
   1. For estimate**:** 2 keys per lockset, 5 master keys per group, 5 grand-master keys, 3 control keys.

J. For estimate**:** VKC stamping plus “DO NOT DUPLICATE”.

K. Bitting List**:** use secured shipment direct from point of origination to Owner upon completion.

PART 3 - EXECUTION

3.1 ACCEPTABLE INSTALLERS:

A. Can read and understand manufacturers’ templates, suppliers’ hardware schedule and printed installation instructions. Can readily distinguish drywall screws from manufacturers’ furnished fasteners. Available to meet with manufacturers’ representatives and related trades to discuss installation of hardware.

3.2 PREPARATION:

A. Ensure that walls and frames are square and plumb before hardware installation. Make corrections before commencing hardware installation. Installation denotes acceptance of wall/frame condition.

B. Locate hardware per SDI-100 and applicable building, fire, life-safety, accessibility, and security codes.
   1. Notify Architect of code conflicts before ordering material.
   2. Locate latching hardware between 34 inches to 44 inches above the finished floor, per California Building Code, Section 1008.1.9.2 and 1133B.2.5.2.
   3. Locate panic hardware between 36 inches to 44 inches above the finished floor.
   4. Where new hardware is to be installed near existing doors/hardware scheduled to remain, match locations of existing hardware.

C. Overhead stops**:** before installing, determine proposed locations of furniture items, fixtures, and other items to be protected by the overhead stop's action.

3.3 INSTALLATION

A. Install hardware per manufacturer’s instructions and recommendations. Do not install surface-mounted items until finishes have been completed on substrate. Set units level, plumb and true to line and location. Adjust and reinforce attachment substrate for proper installation and operation. Remove and reinstall or replace work deemed defective by Architect.
   1. Gaskets**:** install jamb-applied gaskets before closers, overhead stops, rim strikes, etc; fasten hardware over and through these seals. Install sweeps across bottoms of doors before astragals, cope sweeps around bottom pivots, trim astragals to tops of sweeps.

2. When hardware is to be attached to existing metal surface and insufficient reinforcement exists, use RivNuts, NutSerts or similar anchoring device for screws.
3. Use manufacturers' fasteners furnished with hardware items, or submit Request for Substitution with Architect.
4. Replace fasteners damaged by power-driven tools.

B. Locate floor stops no more that 4 inches from walls and not within paths of travel. See paragraph 2.2 regarding hinge widths, door should be well clear of point of wall reveal. Point of door contact no closer to the hinge edge than half the door width. Where situation is questionable or difficult, contact Architect for direction.

C. Core concrete for exterior door stop anchors. Set anchors in approved non-shrink grout.

D. Locate overhead stops for minimum 90 degrees at rest and for maximum allowable degree of swing.

E. Install closers inside building, stairs, and rooms as scheduled.

F. Drill pilot holes for fasteners in wood doors and/or frames.

G. Lubricate and adjust existing hardware scheduled to remain. Carefully remove and give to Owner items not scheduled for reuse.

3.4 ADJUSTING

A. Adjust and check for proper operation and function. Replace units, which cannot be adjusted to operate freely and smoothly.
1. Hardware damaged by improper installation or adjustment methods**:** repair or replace to Owner’s satisfaction.
2. Adjust doors to fully latch with no more than 1 pound of pressure.
3. Adjust delayed-action closers on fire-rated doors to fully close from fully-opened position in no more than 10 seconds.
4. Adjust door closers per 1.9 this section.

B. Fire-rated doors**:**
1. Wood doors**:** adjust to 0.125 inches clearance at heads, jambs, and meeting stiles.
2. Steel doors**:** adjust to 0.063 inches minimum to 0.188 inches maximum clearance at heads, jambs, and meeting stiles.
3. Adjust wood and steel doors to 0.75 inches maximum clearance (undercut) above threshold or finish floor material under door.

C. Adjust closers to meet ADA

D. Final inspection**:** Installer to provide letter to Owner that upon completion installer has visited the Project and has accomplished the following**:**
1. Has re-adjusted hardware.
2. Has evaluated maintenance procedures and recommend changes or additions and instructed Owner’s personnel.

3. Has identified items that have deteriorated or failed.
4. Has submitted written report identifying problems.

3.5 DEMONSTRATION:

A. Demonstrate mechanical hardware and electrical, electronic and pneumatic hardware sy stems, including adjustment and maintenance procedures.

3.6 PROTECTION/CLEANING:

A. Cover installed hardware, protect from paint, cleaning agents, weathering, carts/barrows, etc. Remove covering materials and clean hardware just prior to substantial completion.

B. Clean adjacent wall, frame and door surfaces soiled from installation / reinstallation process.

END OF SECTION 08 71 00

SECTION 08 74 00 – ACCESS CONTROL

PART 1 - GENERAL

1.01 SUMMARY

A. All work pertaining to Access Control System to be provided by Base Bid.

B. The work consists of providing and installing prescribed systems and equipment, in accordance with the Owner's directives and needs. The Contractor shall design, install, and configure systems to provide the exact function described herein and will be held to the operational criteria. Contractor shall be responsible for providing and installing a complete and fully operational system, with the intended features and capabilities, whether or not all required parts, components, systems or accessories are specified in the construction documents. Contractor shall provide all required parts, components, systems, materials and accessories needed for a complete and working system, without additional cost to the owner.

C. Furnish all labor, materials, tools, equipment, and services for all Access Control Equipment, as indicated, in accord with provisions of Contract Documents. Final terminations and system commissioning to be performed by a factory certified technician. Systems and the respective specification sections which are part of this section include:

D. Items include but are not limited to the following:
1. Reader Controller.
2. Reader Interface.
3. Power Supply.
4. Card Reader and Cards –Credentials.
5. Wiring, switches, and ancillary equipment.
6. Although such work is not specifically indicated, provide and install supplementary or miscellaneous items, appurtenances and devices incidental to, or necessary for, a sound, secure and complete installation.
7. Training on operation and software of the access control system per Section 3.7 of this specification section.

E. Intent of Access Control specification
1. The following specification shall be considered as coordinated with the general conditions, special conditions and the preamble of this and other related sections. It shall be the Security Contractor's responsibility to furnish all necessary systems and equipment, in accordance with the Owner's directives and needs.
2. Where items aren't definitely or correctly specified and are required for completion of the work, a written statement of such omission, error, or other discrepancy shall be sent to the Architect, prior to date specified for receipt of bids for clarification by addendum; or, furnish such items in the type and quality established by this specification, and appropriate to the service intended.
3. Adjustments to the Contract Sum will not be allowed for omissions not clarified prior to bid opening.

1.02 RELATED SECTIONS:

A. Division 26 – Electrical

B. Section 08 11 13: Hollow Metal Doors and Frames

C. Section 08 14 23.16: Wood Doors.

D. Section 08 80 00: Glazed Systems

E. Section 08 71 00: Door Hardware

1.03 REFERENCES

A. International Building Code, Current Edition

B. State and Local Codes including Authority Having Jurisdiction

C. UL - Underwriter's Laboratories

D. ADA – Americans with Disabilities Act

E. NFPA 70 National Electric Code

1.04 ABBREVIATIONS AND ACRONYMS

A. ACS: Access control system.

B. EACS: Embedded access control system.

C. LAN: Local area network.

D. LED: Light-emitting diode.

E. TCP/IP: Transport control protocol/Internet protocol incorporated into Microsoft Windows

F. UPS: Uninterruptible power supply.

1.05 DEFINITIONS

A. ABA Track: Magnetic stripe that is encoded on track 2, at 75-bpi density in binary-coded decimal format.

B. Proximity Readers and Credentials: Card and reader designed to validate when card is presented within the proximity of the card reader.

C. Proximity Credential to have 125 kHz compatible with XceedID, and HID card readers.Proximity Reader having 125 kHz with Wiegand interface and compatible for use with all industry leading credentials.

D. Smart Card: Contactless credential having MIFARE DESFire EV1 technology.

Designed to add additional layers of security protection having 128-bit diversified key encryption. Data storage having 2k, 4k, 8k bite and memory of 16k, 32k, and 64k.

E. Key pad: For the validation of a pre-programmed personal identification number or "PIN".

F. Credential: Data assigned to an entity and used to identify that entity.

G. Toggle: Double swiping a credential to change the state of a door.

H. Pass-Through: The ability assigned to a person's credential that allows them to access a door even if in lockdown state.

I. Lockdown: The ability assigned to a credential that allows the person using this credential to place a door into lockdown state.

J. RS-485: A TIA/EIA standard for multipoint communications.

K. Wiegand: Patented magnetic principle that uses specially treated wires embedded in the credential card.

L. Workstation: A PC with internet access that is connected to the network and can access the controller

M. NVR: network video recorder that resides on IP network and can be accessed by any PC

N. IP camera: cameras that transmit video over IP network.

1.06 SUBMITTALS

A. Submit data consisting of shop drawings and catalog cuts complete with technical data necessary to evaluate the material and equipment. Include dimension, wiring and block diagrams, performance data, ratings, control sequences, and other descriptive data necessary to describe the item proposed and its operating characteristics. Include a complete technical specification for the submitted equipment, noting differences and adherence to all Division 16 sections.

B. Submit shop drawings and product data in accordance with Division 1 and this Section.

1. Coordinate with other trades in submittal of shop drawings.
2. Shop drawings shall detail space conditions and shall be subject to final review by the Architect.
3. Provide an operational narrative of each component/system. See Section 08710 Door Hardware for operational description.
4. Submit to Owner a complete listing of proposed devices, indicating interconnection equipment locations and specifying terminal/connecter termination locations. Submit a complete set of proposed drawings, identifying equipment locations, types of cabling, numbers of conductors, raceway locations, and termination points of each conductor.
5. Cable Requirements
   a. Twisted, shielded, plenum-rated type cable shall be used.

b. All exposed wiring shall be in ridged conduit and wire mold.
c. All cables shall be fastened to the structure at least every 10 feet where not in conduit.

6. The approval of shop drawings or samples does not relieve the Security Contractor of responsibility for any deviation from the requirements of the Contract Documents, unless the Security Contractor has informed the Architect in writing of such deviation at the time of submission, has noted the deviation on the shop drawings, and the Architect has given written approval of the specific deviation. The Architect's approval also does not relieve the Security Contractor from responsibility for errors or omissions in the shop drawings or samples.
7. Coordinate equipment submittals with construction schedules.
8. Do not purchase or install equipment requiring submittal until the review process is complete.

C. Qualification Data: For system supplier. Compliance with this Section shall include letters of certification Certifications shall be submitted for approval with and be incorporated with submittal. Submittals will not be considered without the certifications.

D. Closeout submittals Warranty Documentation provide copies of manufacturers warranties for all system components and applicable equipment. Include statement of labor warranty from the manufacturer, Security Contractor, and/or 3rd party entity.

E. Record Documentation.
1. Submit a copy of a signed agreement between the Security Contractor and the Owner stipulation that the license of all software and operation systems residing on the server and workstations shall become the sole property of the Owner.
2. Submit to Owner upon completion of Work, all passwords used to access all aspects of the operating system software and database utilized by the system. Documentation shall include the name and position of anyone who has knowledge or record of these passwords.

F. Extra Stock Materials: Furnish materials described below that match products installed and that are packaged with protective covering for storage and identified with labels describing contents.
1. Fuses of all kinds, power and electronic, equal to 10 percent of amount installed for each size used, but no fewer than three units.
2. Substantial Design Closeout Documentation
3. Operation and Maintenance Manual Data: Submit data in accordance with Division 1 and this Section for all equipment specified in this Section. Include complete set of supplier's operating instructions, installation instructions, and troubleshooting guide. Include final listing of doors, locations and normal status in MS Excel format.
4. Prior to Substantial Completion, provide schematic drawings depicting type and location of interface equipment/components, number of cables and conductors, raceway locations, types of connectors, circuit requirements and type and dimensions of enclosures.

G. Tools
1. The Security Contractor shall provide documentation of any specialized tools required by the End User in order to perform routine maintenance.

2. Commissioning Reports: Security Contractor shall provide documentation of both the Final Test Acceptance and Start Up Testing as per Part 3, 3.07.

1.07 QUALITY ASSURANCE

A. Requirements of Regulatory Agencies:
1. Furnish security equipment to comply with the requirements of laws, codes, ordinances, and regulations of the governmental authorities having jurisdiction where such requirements exceed the requirements of the Specifications.
2. Furnish security equipment to comply with the requirements of American National Standards for Making Buildings and Facilities Accessible to and Usable by Physically Handicapped People (ICC/ANSI A117.1), the governmental authority having jurisdiction and to comply with Americans with Disabilities Act.

B. System supplier to be certified by the equipment manufacturer as capable of installing and supporting and servicing the products to be furnished. Certification shall be submitted on the equipment manufacturer's letterhead.

C. Contractor qualifications:
1. Company that is trained, authorized, and certified to install the specified products.
2. Company with a minimum of 5 (five) years system design, engineering supervision, and installation experience in the access control industry.
3. The contractor will maintain a fully staffed local office within 50 miles of the work site. The service center will be staffed by factory trained technicians and must be adequately equipped to provide emergency phone service within twenty four (24) hours on a twenty-four (24) hour, 365 days per year basis, whether or not the owner purchases a maintenance contract with the contractor.
4. Within the local service center, the contractor must maintain an inventory of spare parts and other items critical to system operation and as necessary to meet the emergency service requirements.
5. The contractor must have in-house engineering and project management capability consistent with the requirements of this project. The contractor shall provide a project manager who is actively in the project. This person shall be the same individual throughout the course of the project and shall be the person responsible for the scheduling of the system programming, preparation of the Operation and Maintenance Manuals, Training Programs, documentation and system testing, maintenance of Drawings and the coordination of all subcontract labor. The owner reserves the right to approve the contractor's Project Manager.
6. The contractor must participate in a drug-free workplace program.

D. Testing Agency: Electrical Components, Devices, and Accessories: Listed and labeled as defined in NFPA 70, Article 100, by a testing agency acceptable to authorities having jurisdiction, and marked for intended use.

E. Pre-Installation Conference: Prior to installation arrange conference between supplier, and related trades to review materials, procedures, and coordinating related work.

F. Sequencing: The work shall be performed in the following sequence:
1. Installation of Access Controllers & Modules.
2. Installation of new devices and new readers.
3. Installation of site control equipment.

4. Commissioning of the new system components.

G. The Authorized Dealer will provide pricing for both 1 year warranty from date of purchase.

1.08 PRODUCT DELIVERY, STORAGE AND HANDLING

A. Acceptance: Upon delivery to the site, Contractor shall inspect all products and materials for any damage. Acceptance of the units constitutes that the inspection has occurred and no damaged or unacceptable products were found, and any damage or unacceptable products would be the responsibility of the Contractor.

B. Product Storage and Handling Requirements
1. Central Station, Workstations, and Controllers:
a. Store in temperature and humidity controlled environment in original manufacturer's sealed containers. Maintain ambient temperature between 50 and 85 deg F (10 and 30 deg C), and not more than 80 percent relative humidity, non-condensing.
b. Open each container; verify contents against packing list, and file copy of packing list, complete with container identification for inclusion in operation and maintenance data.
c. Save original manufacturer's containers and packing materials and deliver as directed under provisions covering extra materials.

1.09 PROJECT CONDITIONS

A. Maintain environmental conditions (temperature, humidity and ventilation) within limits recommended by manufacturer for optimum results. Do not install products under environmental conditions outside manufacturer’s absolute limits.

1.10 COORDINATION

A. Coordinate work of this Section with other directly affected Sections.

B. Conduit and raceways as needed for electrical hardware items. Fire/life-safety system interfacing. Point-to-point wiring diagrams plus riser diagrams to related trades.

1.11 WARRANTY

A. All components shall be supplied with a one- (1) year warranty against defects in materials and workmanship, commencing with substantial completion of the project.

B. During system warranty period, system updates via modem or mailings are to be made available to owner at no charge to owner

.

C. During warranty period, provide twenty-four (24) hour toll-free technical support.

PART 2 - PRODUCTS

2.01 MANUFACTURERS

A. Access Control System Hardware/Firmware/Software:
   1. Schlage Security Management System as manufactured by Schlage Electronics.

2.02 SYSTEM CAPABILITIES

A. The access control system software shall serve as a database manager, controlling badge data, access rights, time schedules, multiple operation modes, elevator control, visitor sign-in/sign-out and access privileges and alarm point information. Database changes shall be updated or downloaded automatically from the system server to the field panels. The system server shall determine which changes are to be downloaded to which field panels.

B. All databases should have the ability to add, delete, report, view and edit information.

C. The system shall provide storage of all system transactions in a retrievable file.

D. Log all events by time and date.

E. The software shall use drop-down menus for all previously entered system-required data.

F. The system shall offer 'lock-down' capability in which the user can lock (or change the state of) all doors simultaneously with one single mouse click.

G. The system shall provide mode of system operation that requires the operator to enter a response to an event when acknowledging it.

H. The system shall provide a hierarchical structure of alarm set up and acknowledgement that allows acknowledged alarms to be automatically cleared.

I. The system shall provide a mode of operation where unacknowledged alarms can be re-routed to different groups of workstations.

J. The system shall provide a mode of operation that does not allow the operator to clear an alarm prior to being restored to normal.

K. The system shall provide ability to manually operate the system doors. The manual functions include the ability to Lock, Un-Lock, Shunt, Un-Shunt and Return to Time Zone.

2.03 SYSTEM PROGRAMMING

A. The contractor shall furnish and install all hardware, software, devices and components to meet the performance and functional requirements described in these contract documents. Include all items required, whether or not individually specified, to ensure a completely operational integrated Security Protection system. The contractor must complete all database entry, and provide the owner with training on cardholder entry, as well as all system programming. No additional costs shall be allowed to make the system operational or to meet specifications.

2.04 SYSTEM ARCHITECTURE:

A. System Description:
1. Primary function is to regulate access through specific portals to Secured areas.
2. Shall utilize card technology as its primary access device.
3. Surge Protection Components must be protected from voltage surges originating externally to equipment housing and entering through power, communication, signal, control, or sensing leads. Must also include surge protection for external wiring of each conductor-entry connection to components.
4. Power: Any special power treatment required, such as filtering or spike elimination that may be required for proper operation and protection of the ACS, shall be provided with the system. Step down power supply with battery backup of at least 4 hours.
5. Backup Power: ACS equipment power shall be supplied from a UPS system, which shall be tied to emergency building power circuits. The UPS shall power the equipment including, but not limited to, the Embedded Controller, electronic locks and lock power supplies for a minimum of 4 hours.

2.05 SYSTEM SOFTWARE:

A. Software and Server Package
1. E-SENT-SFT-5 Enterprise 5 Client Software, Five (5) concurrent client license must be installed on a computer that meets the minimum requirements (see below).
2. Access Control & Alarm monitoring software includes in base package:
   a. Transaction & Alarm monitoring / routing
   b. Cardholder management (includes special access needs)
   c. Unlimited card holder capacity
   d. Unlimited card reader capacity
   e. Unlimited alarm capacity
   f. Unlimited operator capacity
   g. Manage online and off line locks/readers
   h. Portrait Capture and card production (printers not included)
   i. Video & Camera control via Schlage NVR & DVR's (not included)
   j. Guest Pass management and badge creation (printer not included)
   k. Complete Auditing/Reporting capabilities
   l. Auto scheduling of predefined reports
   m. Elevator Control
3. Unless otherwise specified by owner, server shall be provided by the Security Contractor. Minimum requirements are MS Windows 8 Operating System, network card, DVD/CD-RW, 17" flat screen monitor, 104-key keyboard and mouse.
4. Guest Pass Software: SGUEST-LIC
5. Enrollment Reader: SENROLL

2.06 SYSTEM HARDWARE:

A. Reader Controllers:

B. Reader Controller model's SSRC &. SRCNX-R – as manufactured by Schlage

Electronics.

1. The reader controllers shall be independently programmed, intelligent devices, which shall be able to make decisions and store transactions at the local level. The system shall provide reader controllers for one read head or up to 16 reader capacity, and field configurable by standard system software. Capable of being fully networked into (TCP/IP LAN/WAN) network connectivity. Downstream communication shall be done through RS-485. Enclosure to be lockable NEMA rated 20"x 20" x 4".
2. Downstream communication via RS-485 connects directly to the following devices:
   a. SRINX.
   b. SIONX-8.
   c. Schlage AD Series locks.
   d. Schlage wireless PIM-485
3. Scalable for the following:
   a. 1 door controller: SSRC
   b. 16 door controller: SRCNX-R
4. Specifications:
   a. Up to16 input device channels
   b. Up to 16 supervised or non-supervised inputs
   c. Up to 16 SP/DT relays
   d. Flashable Firmware
   e. 64 MB RAM for ID capability
   f. Power requirements 24 VAC @ 14 amps
   g. UL Listed for UL294
   h. CE marking
   i. RoHS compliant

C. Reader Interface:

1. Reader Interface model. SRINX – as manufactured by Schlage Electronics.
2. Each reader in the system shall have a dedicated reader interface panel able to connect to the controller via RS-485 protocol, able to support proximity, smart card, magnetic stripe, biometric, bar code, and Wiegand technologies. The reader interface panel shall have two form "C" SP/DP 1 amp relay outputs, four supervised or unsupervised contact inputs.
3. Specifications:
   a. Dimensions - 8 ¼"H x 7 ½"W x 3 ½"D
   b. Power input - 14-24 VDC
   c. Max. Current req. – 120 mA (without read head)
   d. Operating Temperature - 0° to 49° C or 32° to 120° F
   e. Cable spec. – 18 AWG 2 conductor stranded, shielded, twisted for data to SRCNX-R & 18 AWG 2 conductor stranded, shielded, twisted for power, & 18 AWG 6 conductor for read heads.
   f. Cable distance – with RS-485 4,000 ft.for data to SRCNX-R & 500 ft for power & 500 ft for read head.
   g. Operating humidity – 10% to 90% (non condensing)
   h. UL Listed for UL294.
   i. CE marking
   j. RoHS compliant

D. Smart Reader Controller:
1. Smart Reader Controller model. SSRC – as manufactured by Schlage Electronics.
2. Each smart reader controller shall operate on Linux operating system compatible with Schlage Security Management software version 5.3.5 and higher. It shall communicate via TCP/IP protocol and is able to be connected to a variety of different read head technologies. Controller to have 64 Mb flash memory and 64 Mb RAM with two form "C" SP/DT 1A relays and include four supervised or unsupervised input contacts for connection of request to exit or door position switches. It shall be capable of being fully networked and includes tamperproof switch within the enclosure. Requires UL listed 294 power supply for operation. Controller shall have selectable jumper for connection with Clock/data, and Wiegand or serial (RS232 or RS485).
3. Downstream communication via RS-485 with option for RS-232 and connects directly to the following devices:
   a. One reader.
   b. Eight AD300 hardwired locks.
   c. One PIM400-485-SMS to support sixteen AD400 wireless locks.
4. Specifications:
   a. Dimensions - 8 ¼"H x 7 ½"W x 3 ½"D
   b. Power input – 20 - 32 VDC powered locally.
   c. Max. Current req. – 100 mA (without read head)
   d. Operating Temperature - 0° to 49° C or 32° to 120° F
   e. Cable spec. – Network protocol 10 BaseT ethernet.& 18 AWG 2 conductor stranded, shielded, twisted for power, & 18 AWG 6 conductor for read heads &18 AWG 2 conductor (RS485) for AD series devices
   f. Cable distance –500 ft for power & 500 ft for read head & up to 4000 ft in total for RS 485 for AD series devices
   g. Operating humidity – 10% to 90% (non condensing)
   h. UL Listed for UL294.

E. Expansion Board:
1. Expansion Board model. SIONX-8 – as manufactured by Schlage Electronics.
2. Each expansion board shall have eight SP/DT relay outputs and communicates directly to any SRCNX or SSRC via RS485 protocal. It shall have 16Kb flash memory and 1Kb RAM with two serial ports for ether RS232 or RS485. The board shall be equipped with eight supervised or unsupervised contact inputs and eight form "C" SP/DT 1 A relay outputs.
3. Specifications:
   a. Dimensions - 8 ¼"H x 7 ½"W x 3 ½"D
   b. Power input – 14 - 24 VDC powered locally.
   c. Max. Current req. – 100 mA
   d. Operating Temperature - 0° to 49° C or 32° to 120° F
   e. Cable spec. – 18awg/2 conductor, stranded, shielded, and twisted (RS485 data only)
   f. Cable distance – with RS-485 4,000 ft.or data to SRCNX-R & 500 ft for power
   g. UL Listed for UL294.
   h. CE marking
   i. RoHS compliant

2.07 POWER SUPPLIES:

A. SBB-3APS as mfg. by Schlage Electronics.
1. Having LED's indicators show good AC power and DC on.
2. Electronic power limited short circuit protection.
3. Thermal regulator for preventing overheating.
4. Output ON/OFF service switch.
5. No switch over or voltage drop when input power fails.
6. Specification:
   a. Power input – 85-260VAC
   b. Power output – 24VDC @ 3A
   c. Enclosure dimension – 14.0" x 9.0" x 3.5"
   d. Operating temperature - 14° to 95°F (-20° to 35°C)
   e. UL listed for UL294 access control and more.

B. SBB-5APS as mfg. by Schlage Electronics,
1. Having LED's indicators show good AC power and DC on.
2. Electronic power limited short circuit protection.
3. Thermal regulator for preventing overheating.
4. Output ON/OFF service switch.
5. No switch over or voltage drop when input power fails.
6. Specifications:
   a. Power input – 85-264VAC
   b. Power output – 24VDC @ 5A
   c. Enclosure dimension – 14.0" x 14.0" x 4.75"
   d. Operating temperature - 14° to 95°F (-20° to 35°C)
   e. UL listed for UL294 access control and more.

C. SBB-20APS as mfg. by Schlage Electronics,
1. Having LED's indicate AC power and DC on.
2. Electronic power limited short circuit protection.
3. Thermal regulator for preventing overheating.
4. Output ON/OFF service switch.
5. No switch over or voltage drop when input power fails.
6. Specifications:
   a. Power input – 90VAC-132VAC
   b. Power output – 24VDC @ 10A and 12VDC @ 20A
   c. Enclosure dimension – 14.0" x 14.0" x 4.75"
   d. Operating temperature - 14° to 95°F (-20° to 35°C)
   e. UL listed for UL294 access control and more.
   f. CE marking

2.08 CARD READERS

A. Multi-Technology and Proximity Readers: Readers available in wall mount, mullion mount, and with or without keypad. They shall be 125 kHz prox. and 13.56 MHz contactless readers compatible with all ISO 15693 and ISC 14443 standards. Having a LED red/green visual indicator with audio feedback. Reader shall be made of PBT polymer in charcoal and black colors. Able to support other technologies.

B. Multi-Tech/Proximity Card Reader: - SXF1100 series as mfg. by Schlage Electronics.
1. Specifications:
   a. Power supply – Linear DC
   b. Voltage range – 6-16 VDC
   c. Max. current req. – Average 95mA DC, Peak 254 mA DC.
   d. Cable spec – 18 AWD 6 conductor stranded/shielded.
   e. System interface – Wiegand.
   f. Cable distance – Wiegand output 500 ft.
   g. Operating temperature - -31F to 151F
   h. Enclosure dimension – 5.8” x 1.72” x 1.14”
   i. Operating temperature - 14° to 95°F
   j. UL listed for UL294 access control and more.
   k. FCC certification USA and Canada.

C. Multi-Tech/Proximity Card Reader: - SXF1500 series as mfg. by Schlage Electronics.
1. Specifications:
   a. Power supply – Linear DC
   b. Voltage range – 5-16 VDC
   c. Max. current req. – Average 110mA DC, Peak 160mA DC.
   d. Cable spec – 18 AWD 6 conductor stranded/shielded.
   e. System interface – Wiegand.
   f. Cable distance – Wiegand output 500 ft.
   g. Operating temperature - -31F to 151F
   h. Enclosure dimension – 5.1” x 3.25” x .76”
   i. Operating temperature - 14° to 95°F
   j. UL listed for UL294 access control and more.
   k. FCC certification USA and Canada.

D. Multi-Tech/Proximity Card Reader: – SXF2110 series as mfg. by Schlage Electronics.
1. Specifications:
   a. Power supply – Linear DC
   b. Voltage range – 8-16 VDC
   c. Max. current req. – Average 120mA DC, Peak 215mA DC.
   d. Cable spec – 18 AWD 6 conductor stranded/shielded.
   e. System interface – Wiegand.
   f. Cable distance – Wiegand output 500 ft.
   g. Operating temperature - -31F to 151F
   h. Enclosure dimension – 5.85” x 4.5” x 1.45”
   i. Operating temperature - 14° to 95°F
   j. UL listed for UL294 access control and more.
   k. FCC certification USA and Canada.

E. Smart Card Technology: Readers available in wall mount, mullion mount, and with or without keypad. They shall be 125 kHz prox. and 13.56 MHz contactless readers compatible with all ISO 14443 standards. Having a LED red/green visual indicator with audio feedback. Reader shall be made of PBT polymer in charcoal and black colors. Able to support other technologies.

F. Smart Card Reader – SXF1060MF as mfg. by Schlage Electronics.
1. Specifications:

a. Power supply – Linear DC
b. Voltage range – 5-16 VDC
c. Max. current req. – Average 50mA DC, Peak 80mA DC.
d. Cable spec – 18 AWD 6 conductor stranded/shielded.
e. System interface – Wiegand.
f. Cable distance – Wiegand output 500 ft.
g. Operating temperature - -31F to 151F
h. Enclosure dimension – 4.5” x 1.72” x 1.0”
i. Operating temperature - 31° to 151°F
j. UL listed for UL294 access control and more.
k. FCC certification USA and Canada.

G. Smart Card Reader – SXF1560MF as mfg. by Schlage Electronics.
1. Specifications:
a. Power supply – Linear DC
b. Voltage range – 5-16 VDC
c. Max. current req. – Average 110mA DC, Peak 160mA DC.
d. Cable spec – 18 AWD 6 conductor stranded/shielded.
e. System interface – Wiegand.
f. Cable distance – Wiegand output 500 ft.
g. Operating temperature - -31F to 151F
h. Enclosure dimension – 5.1” x 3.25” x 0.76”
i. Operating temperature - 31° to 151°F
j. UL listed for UL294 access control and more.
k. FCC certification USA and Canada.

H. Smart Card Reader – SXF2200MF as mfg. by Schlage Electronics.
1. Specifications:
a. Power supply – Linear DC
b. Voltage range – 5-16 VDC
c. Max. current req. – Average 70mA DC, Peak 105mA DC.
d. Cable spec –18 AWD 6 conductor stranded/shielded.
e. System interface – Wiegand (standard) RS-485.
f. Cable distance – Wiegand output 500 ft.
g. Operating temperature - -31F to 151F
h. Enclosure dimension – 6.10” x 4.55” x 1.27”
i. Operating temperature - 31° to 151°F
j. UL listed for UL294 access control and more.
k. FCC certification USA and Canada.

2.09 CREDENTIALS:

A. Multi-Tech/Proximity Credentials: They shall be 125 kHz prox. and 13.56 MHz contactless credentials compatible with all ISO 14443 standards.
1. Multi-Tech/Proximity Card Credentials – SXF7510 as mfg. by Schlage Electronics.

B. Smart Card credentials: They shall be 125 kHz prox. and 13.56 MHz contactless credentials compatible with all ISO 14443 standards.
1. Smart Card Credentials – SXF8520 as mfg. by Schlage Electronics.

PART 3 - EXECUTION

3.01 SITE VERIFICATION OF CONDITIONS:

A. Examine pathway elements intended for cables. Check raceways, cable trays, and other elements for compliance with space allocations, installation tolerances, hazards to cable installation, and other conditions affecting installation.

B. Examine roughing-in for LAN and control cable conduit systems to PCs, Controllers, card readers, and other cable-connected devices to verify actual locations of conduit and back boxes before device installation.

C. Proceed with installation only after unsatisfactory conditions have been corrected.

3.02 PREPARATION

A. Furnish any inserts required for building into concrete, masonry, and other work, to support and attach work of this section. Furnish in ample time to comply with schedule of work into which inserts are built.

B. Verify that power and outlets are in correct locations.

C. Verify that building structure is properly prepared for mounting, attachment and support of equipment.

D. Prior to installation of systems components and devices, verify all required preparations have been properly performed and that substrates are acceptable for installation.

E. Verify all rough-ins and field dimensions.

F. Report in writing to the Architect any prevailing conditions that will adversely affect satisfactory execution of Work in this Section.
   1. Architect reserves the right to review proposed methods of construction/installation, reject proposed methods, and have the installation done in a satisfactory method at the Contractor's cost.

3.03 INSTALLATION OF SYSTEM

A. Install work in accordance with manufacturer's recommendations, instructions and final Shop Drawings. All control panels and power supplies should be installed so as to allow easy access for service in the future

B. Anchor components securely in place, plumb, level, and accurately aligned. Provide separators and isolators to prevent corrosion and electrolytic deterioration.

C. For card readers that are located in equipment traffic areas, and that are exposed to damage due to collision or impact from forklifts, or manually moved carts, carriers, or other equipment used by the Owner, provide protective bollards, railings, coverings etc. to ensure that all card readers installed are properly protected from such damage.

D. Provide fastenings, plates, and other incidental items required for complete and operational installation.

E. Provide required electrical work in accordance with code requirements.

3.04 SYSTEM SOFTWARE

A. Develop, install, and test software and databases for the complete and proper operation of systems involved. Assign software license to Owner and assign secured IP address to / or supplied by Owner

3.05 SYSTEM PROGRAMMING

A. The Contractor shall work with the owner to ensure that the new components will be properly programmed into the existing system.

B. Coordination required is as follows;
1. Personal/staff information.
2. Access time for all personal /staff.
3. Definitions of openings for staff access.
4. Holiday definition.
5. Special access privileges.
6. Lock down conditions.

3.06 SITE QUALITY CONTROL

A. The Contractor shall develop a Final Test and Acceptance (FTA) Plan. The plan shall identify each new system component provided in the work, intent of test, method or methods of test and expected results. Each component listed in the plan shall include space for test part signatures, brief comments, time of test and pass/fail check boxes. The FTA plan shall be submitted to the owner's representative 30 days prior to the scheduled final test.

B. Provide manufacturer's supervision of final testing of each system.
1. On-Site Testing: Manufacturer trained and authorized Systems Integrator shall functionally test each component in the system after installation to verify proper operation and confirm that the wiring and dressing conform to the wiring documentation.

C. Each system shall test free from interference, opens, grounds, and short circuits.

D. Start-up Test (Burn-In)
1. Following completion of the Final Test, the system shall undergo a thirty (30) day Operational Demonstration Test (ODT) or Burn-In period. This operational demonstration period shall start when all specified systems and equipment have been installed and "Substantial Completion" is reached, with only a moderate number of punch list items remaining.
2. During this period, the system shall be operated under a normal facility traffic load for no less than 30 days. If any item or system fails during the ODT, the 30-day

burn-in period shall be suspended for that item until repaired or replaced. Once repaired or replaced, the burn-in period shall recommence.

3. Final system acceptance of the entire project will be withheld until after successful completion of this operational demonstration period for all systems and components.
4. System will not be considered substantially complete until the following activities have been successfully completed:
   a. Acceptance of all submittals.
   b. Delivery of final documentation
   c. Successful Final Test and Inspection
   d. Successful Operational Demonstration Test
   e. Successful training and demonstration, including operation of systems using the manuals.
   f. Purging of Contractor User privileges and return of all key card media.

3.07 OWNER PERSONNEL TRAINING

A. On Site Operator training: instruct operating staff in proper operation, including hands-on training.
   1. Minimum of eight (8) man-hours covering the operations for each system installed.
   2. Training sessions shall be provided to supervisors, staff utilizing systems and equipment provided under this section, maintenance personnel and any other personnel designated by the owner. Security Contractor should prepare to provide operator training for up to ten (10) personnel.
   3. Security contractor shall be prepared to provide training sessions on all work shifts, including day, evening and night shifts.

B. On Site Administrator training: instruct owner-designated security system administrators for each system installed.
   1. Minimum of eight (8) man-hours of training for each owner-designated individual.
   2. Training to cover all administrative and management functions, features and controls for each system.

C. Refresher training: provide a 90-day refresher training session to operators and administrators.
   1. Minimum of four (4) hours of training for each owner-designated individual.
   2. Training shall cover summaries of all operator and administrator training topics and shall include greater detail on subject areas or operations not yet mastered by operators or administrators.

D. Review in detail all information in the operations and maintenance manuals for each system provided.

E. Prior to administering the above training, the contractor(s) shall prepare an outline of the training, identifying the goals and expectations of the course and detailing what students are expected to learn.

F. Training courses shall be videotaped for subsequent training use by the Owner.

3.08 CLEANING AND WASTE MANAGEMENT

A. Cleaning and Touchup: Immediately after installation, including the completion of wiring and testing, clean all work and touchup all damaged factory finishes.

3.09 PROTECTION

A. Maintain strict security during the installation of equipment and software. Rooms housing the control station, and workstations that have been powered up shall be locked and secured during periods when a qualified operator in the employ of Contractor is not present.

B. Protection: Provide protective covers, fenders, and barriers as necessary to maintain Work of this Section in same condition as installed until time of Substantial Completion.

3.10 LIFE CYCLE ACTIVITIES

A. Operation and Use: Provide, in writing, Operation and Use procedures for each system component. Such procedures shall be written in order to conform to the manufacturer's recommendations for maximum life cycle.

B. Maintenance: Provide, in writing, Maintenance procedures for each system component. Such procedures shall be written in order to conform to the manufacturer's recommendations for maximum life cycle.

END OF SECTION 08 74 00

SECTION 08 80 00 - GLAZED SYSTEMS

PART 1 – GENERAL

1.01 SECTION INCLUDES

A. Exterior and interior glass

B. Glazing Sealant

C. Aluminum framing systems.

D. Aluminum and glass entry doors.

E. Glazing of hollow metal doors.

F. Glazing of wood doors.

G. Glazing of plastic laminate faced wood doors.

1.02 RELATED WORK

A. Section 08 11 13, Hollow Metal Doors and Frames

B. Section 08 14 23.16, Plastic-Laminate-Faced Wood Doors

C. Section 08 71 00, Finish Hardware

D. Section 07 92 00, Building Sealants

1.03 REFERENCES

A. American Architectural Manufacturers Association
1. AAMA CW-10, Care and Handling of Architectural Aluminum from Shop to Site
2. AAMA/NWWDA 101/I.S.2, Voluntary Specifications for Aluminum, Vinyl (PVC) and Wood Windows and Glass Doors.
3. AAMA 611, Voluntary Specification for Anodized Architectural Aluminum

B. American National Standards Institute (ANSI)
1. Z97.1, Safety Performance Specification
2. Z97.1, Safety Glass Code

C. ASTM International (ASTM)
1. A167, Standard Specification for Stainless and Heat-Resisting Chromium-Nickel Steel Plate, Sheet, and Strip
2. B209, Standard Specification for Aluminum and Aluminum-Alloy Sheet and Plate
3. B210, Standard Specification for Aluminum and Aluminum-Alloy Drawn Seamless Tubes

4. B221, Standard Specification for Aluminum and Aluminum-Alloy Extruded Bars, Rods, Wire, Profiles, and Tubes
5. B308, Standard Specification for Aluminum-Alloy 6061-T6 Standard Structural Profiles
6. C509, Standard Specification for Cellular Elastomeric Preformed Gasket and Sealing Material
7. C1036, Standard Specification for Flat Glass
8. E283, Standard Test Method for Determining the Rate of Air Leakage Through Exterior Windows, Curtain Walls, and Doors Under Specified Pressure Differences Across the Specimen
9. E330, Standard Test Method for Structural Performance of Exterior Windows, Curtain Walls, and Doors by Uniform Static Air Pressure Difference
10. E331, Standard Test Method for Water Penetration of Exterior Windows, Curtain Walls, and Doors by Uniform Static Air Pressure Difference
11. E547, Standard Test Method for Water Penetration of Exterior Windows, Curtain Walls, and Doors by Cyclic Static Air Pressure Differential

D. American Welding Society (AWS)

E. Federal Specification (FS)
1. DD-G-001403 B
2. T-G-410, Sash putty
3. TT-C-494, Bituminous Paint
4. TT-S-00230, Sealing Compound: Synthetic Rubber Base and TT-S-00203C
5. TT-S-001657, Sealing Compound: Butyl Rubber Base
6. SS-C-153, Mastic Bulk Compound

F. Flat Glass Marketing Association (FGMA)
1. Glazing Sealing Systems Manual
2. Glazing Manual

1.04 SUBMITTALS

A. Shop Drawings: Complete shop drawings by manufacturer indicating elevations, sections, substrates, fasteners, finishes, hardware and installation details.

B. Manufacturer's specifications and other data needed to prove compliance with specified requirements, and manufacturer's installation instructions.

C. Engineer’s calculations of performance requirements.

D. Product Data: Manufacturer's specifications and test reports from an AAMA-accredited laboratory.

E. Samples: Showing color
1. Samples of each type of glass (12 inches x 12 inches minimum)
2. In place sample of sealant at frame perimeter for Architect's approval. Architect will select colors from manufacturer’s full available colors.
3. Samples of framing finish and fastener types for Architect’s approval. Architect will select finishes and colors from those available from manufacturer.

F. Certification of Installation:
1. Provide written certification stating that materials provided meet the specified requirements.
2. Include the following specific information indicating their compliance with referenced standards.
a. Thermal movement
b. Structural properties
c. Water penetration
d. Air leakage
e. Finishes on aluminum surfaces

G. Coordination:
1. Copy Owner's hardware consultant on shop drawings for coordination.

1.05 QUALITY ASSURANCE

A. Use adequate numbers of skilled workmen who are thoroughly trained and experienced in the necessary crafts and who are completely familiar with the specified requirements and the methods needed for proper performance of the work of this Section.

B. In addition to complying with pertinent codes and regulations of governmental agencies having jurisdiction, comply with pertinent recommendations contained in the above referenced Flat Glass Marketing Association publications.

C. Furnish a valid AAMA “Notice of Product Certification” indicating that the windows for the project conform to AAMA/NWWDA 101/I.S.2-97.

1.06 PRE-INSTALLATION CONFERENCE

A. Refer to Section 01 31 00, Project Management and Coordination.

1.07 DELIVERY, STORAGE, AND HANDLING

A. Handle and protect windows and accessories in accordance with AAMA CW-10-97 until project completion

1.08 WARRANTY

A. Warrant the work specified herein for (2) years, against becoming unserviceable or causing an objectionable appearance resulting from either defective or nonconforming materials and workmanship.

B. Defects shall include, but not be limited to, the following:
1. Faulty, improper or inadequate attachment or installation.
2. Chipped edges, broken, or scratched glass.
3. Defective finish of molding
4. Distortion or waves.

PART 2 – PRODUCTS

2.01 ACCEPTABLE MANUFACTURERS

A. Manufacturers listed whose product meet or exceed the specifications are approved for use on the Project. Other manufacturers must have a minimum of five (5) years experience manufacturing products meeting or exceeding the specifications and comply with Division 1 requirements regarding substitutions to be considered.

1. Glass:
   a. AGC Flat Glass North America, Kingsport Tenn. (423) 229-7200
   b. Guardian Industries Corp., Corsicana, TX; (800) 527-2511
   c. Oldcastle Glass Houston, Houston, TX; (866) 653-2278
   d. Pilkington, Toledo, OH; (419) 247-4721
   e. PPG Industries, Inc., Pittsburgh, PA; (412) 434-2858
   f. Viracon, Owatonna, MN; (800) 533-2080
2. Aluminum Framing System, and Doors:
   a. EFCO Corp., Monett, MO; (800) 221-4169
   b. Kawneer Co., Inc., Jonesboro, GA; (770) 478-8841 (Basis of Specification)
   c. Tajima Corp USA, Los Angeles, CA; (818) 547-4595
   d. TRACO Windows, Cranberry Township, PA (888-887-5945)
   e. Tubelite Storefronts & Entrances, Reed City, MI; (800) 866-2227
   f. United States Aluminum, Waxahachie, TX; (800) 627-6440
   g. Vistawall Architectural Products (Oldcastle Glass), Terrell, TX; (972) 551-6100
   h. Wikk Industries, Inc., Greendale, WI; (414) 421-9490
   i. YKK AP America, Inc., Grand Prairie, TX; (972) 206-2554
3. Aluminum Window Manufacturers:
   a. EFCO Corp., Monett, MO; (800) 221-4169
   b. Kawneer Co., Inc., Jonesboro, GA; (770) 478-8841
   c. TRACO Windows, Cranberry Township, PA. (888) 887-5945
   d. Vistawall Architectural Products (Oldcastle Glass), Terrell, TX; (972) 551-6100
   e. Any of the above manufacturers accepted for Aluminum Storefronts who produce aluminum windows as specified.

2.02 PERFORMANCE SPECIFICATIONS

A. Requirements apply simultaneously through the most adverse conditions of each exterior application.

1. Windloads: Design system to withstand positive and negative windloads normal to the plane of the wall in excess of 20 psf.
2. Thermal Movement: Provide for noiseless expansion and contraction of all materials and assemblies due to temperature changes in a range between 10 degrees F and 180 degrees F without detriment to appearance or performance.
3. Water Infiltration: Drain water entering at joints and condensation occurring within the wall construction to the exterior face of the wall. Allow no uncontrolled water other than condensation on the interior face of the wall.

4. Air Infiltration: Limit air leakage to maximum 0.06 cfm per square foot of wall projected area. (Storefront at 8 lb./sq.ft.)

B. Aluminum Window Requirements Conformance to specifications in AAMA/NWWDA 101/I.S.2 when tests are performed on the prescribed 8'0" x 5’0” minimum test size with the following test results:
1. Air Infiltration: Maximum .07 cfm/square foot when tested per ASTM E 283 at a static air pressure difference of 1.57 psf.
2. Water Penetration: No uncontrolled water leakage when tested per ASTM E 547 and ASTM E 331 at a static air pressure difference of 10 psf

3. Uniform Structural: Window to be operable, and maximum .4% permanent deformation per member when tested per ASTM E 330 at a static air pressure difference of 67.5 psf.

2.03 MATERIALS

A. Aluminum:
1. Aluminum Alloys: Comply with the standards and designations of the Aluminum Association and the following ASTM Standards:
   a. Sheet and Plate: ASTM B209
   b. Extruded Bars, Rods, Shapes, and Tubes: ASTM B221.
   c. Bars, Rods, and Wire: ASTM B211
   d. Standard Structural Shapes: ASTM B308
   e. Drawn Seamless Tube: ASTM B210
   f. Extruded Structural Pipe and Tubes: ASTM B429
   g. Welding Rods and Bare Electrodes: AWS Code
2. Aluminum Finish: Anodized.
   a. Quality Standard: Conforming to AAMA 2604 for applied finishes or AAMA 661 for anodized finishes.
   b. Pretreatment: Five-stage; zinc chromate conversion coating.
   c. Application: Electrostatic spray and oven bake by approved applicator.
   d. Coating Quantity: Minimum one primer coat and one-color coat.
   e. Dry Film Thickness: Minimum 1.2 mils on exposed surfaces, except inside corners and channels.

B. Steel:
1. Carbon Steel: Refer to the Structural Steel Section. Provide structural reinforcement as required.
2. Stainless Steel Fasteners: ASTM A167, type 302/304 No. 4 satin finish where exposed.
3. Metals used for shims shall be galvanized steel (ASTM A36 or ASTM A283) where noted as steel and stainless steel (300 Series) where noted as stainless steel. Do not use aluminum or plastic shims unless approved by the Architect.
4. Exposed Cladding, Trim and Panels: Provide cladding elements with formed edge flanges and backside stiffener members as required to maintain such flatness that when measured at room temperature the maximum slope of the surface at any point, measured from the nominal plane of the surface in its final installed position shall not exceed 1.25 degrees.

5. Metal Protection: Materials used as permanent or temporary protection for metals shall conform with the following standards:
   a. Bituminous Paint: FS TT-C-494 or MIL-P-6883A.
   b. Mastic Bulk Compound: FS SS-C-153, Type I or Type II.
   c. Preformed Mastic Tape: NAAMM Specifications for Non-Shrinking, Non- Resilient Performed Sealing Compound
   d. Zinc Rich Paint: MIL-P-38 336.

C. Glazing Materials at Hollow Metal Frames:
1. General: Use glazing compounds and preformed glazing sealants approved for the application and, except as otherwise specified, conforming to Glazing Materials portion of FGMA Glazing Manual.
2. Sealant:
   a. One (1) part acrylic polymer sealant conforming to FS TT-S-00230 or silicone, FS TT-S-0023-C. Use for glazing of all fixed glass. Include primer as recommended by manufacturer.
   b. Color: To match frame.
   c. All sealants shall be compatible with adjacent material per manufacturer's instruction.
3. Setting Blocks: Hard rubber or clean grain softwood.
4. Back-up Material: Foamed polyethylene or polystyrene rodstock, sizes as required by joint condition, and compatible with sealant.
5. Glazing Tape: DAP #1202 or as approved.
6. Glazing Gaskets: Extruded neoprene, free of porosity, surface defects, dimensional irregularities and conforming to physical properties of ASTM C509.
7. Use of metal sash putty will not be permitted, but compound conforming to FS TG- 410 will be permitted. The use of nonskinning compounds, nonresilient type preformed sealers, and preformed impregnated type gasket will not be permitted.

D. Glazing Materials at Aluminum Framing:
1. Glazing Gaskets: Extruded neoprene (Color: Black) sized to fit the frame.
2. Sealant: Comply with Federal Spec. TT-S-00230

E. Concealed Reinforcement Materials:
1. Steel:
   a. Carbon Steel: Refer to the structural steel section. Provide structural reinforcement as required.
   b. Metal Protection: Materials used as permanent or temporary protection for metals shall conform with the following standards:
      1) Bituminous Paint: FS TT-C-494 or MIL-P-6883A.
      2) Mastic Bulk Compound: FS SS-C-153, Type I or Type II.
      3) Preformed Mastic Tape: NAAMM Specifications for Non-Shrinking, Non-Resilient Performed Sealing Compound
      4) Zinc Rich Paint: MIL-P-38 336.

F. Glass:
1. General:
   a. Glass shall meet the requirements of ASTM C1036.

b. Float Glass: Care shall be taken to minimize the tong marks and, unless indicated otherwise on the drawings, the tong marks shall occur at the bottom of the glass (after installation).
c. All glass shall be heat strengthened unless noted otherwise.
d. Color of tinted glass shall be as selected by Architect.
e. Safety Glazing: Subject to compliance with requirements, obtain safety glazing products permanently marked on each individual glass lite with certification label of manufacturer acceptable to authorities having jurisdiction. Safety glazing shall conform to ANSI Z97.1, Safety Performance Specification, and ANSI Z97.1, Safety Glass Code, and IBC 2406.1 as applicable.

2. Glass Types: (As shown or required)
a. Type GL1: 1/4 inch thick glazing quality, clear, tempered float glass.
b. Type GL2: Tempered Fire Rated Glass (clear): Fire protected, glazing assembly safety rated and tested in accordance with NFPA 80; thickness as required to provide specified rating; STR – 28 STC; SHGC 0.82; Glazing shall be clear, colorless and free from unusual distortion; Fire Rating as indicated on drawings. 'FireLite' Plus or approved equal.
c. Type GL3/GL4: 1" Insulating glass unit comprised of an exterior sheet of 1/4 inch thick glass and an inner sheet of impact-resistant laminated glass constructed of two sheets of 1/8 inch thick glass separated by a 0.030 inch thick PVB interlayer. Comply with ASTM C 1172 for kinds of laminated glass indicated and other requirements specified.
1) All glass sheets tempered for Type GL4.
2) Interlayer: Interlayer material as indicated below, clear or in colors, and of thickness indicated with a proven record of no tendency to bubbly, discolor, or lose physical and mechanical properties after laminating glass lites and installation.
a. Interlayer Material: Polyvinyl butyral sheets.

G. Aluminum and Glass Entrance Doors: Kawneer Co., Inc., "Wide Stile" Standard Entrance or equivalent product from list of approved manufacturers.
1. Doors: Shall be 1-23/32 inch thick, consisting of 6 inch vertical stile, 6 inch mid rail, 6" top rail and 12 inch bottom rail aluminum tubular sections with 0.125 inch thick nominal wall thickness.
2. Connections:
a. Provide bolted and welded connections, fit to a hairline joint.
b. Provide reinforcing at bolted attachments. Tapped aluminum is not permitted.
c. Provide concealed screws, nuts, bolts, and anchors, except hardware screws on butt of door, of non-corrosive metal.
3. Glass in Door: Refer to Door and Window Schedule. Deliver doors to job pre-glazed.
4. Glazing Gaskets: Use manufacturers recommended gaskets for flush glazing (Color: Black).
5. Mullion Stabilizer: Provide as required at double acting doors with removable mullion.
6. Hardware: Refer to Section 08 71 00, Finish Hardware.

H. Aluminum Storefront / Entrance Framing System: Kawneer Co., Inc., "TRIFAB VG 451 (VersaGlaze)", typically; or equivalent product from list of approved manufacturers:
1. Size 2 inch by 4-1/2 inch flush glazed type (typical).
2. Provide mullion reinforcement, if necessary, to achieve structural requirements.
3. Glass Pockets: Shall be sized to accept specified glass.
4. Provide sill receptors with end dams. (At all sill conditions.)

I. Aluminum Curtain Wall System: Kawneer Co., Inc., 1600 Wall System 1 Series or equivalent product from list of approved manufacturers:
1. Structural Properties:
   a. Limit the dead load deflection of horizontal members supporting glass to 1/175 of the clear span with a 1/8 inch maximum deflection.
   b. Limit the deflection of any member in a direction parallel to the plane of the wall and of any corner mullion in both parallel and perpendicular directions to a maximum of 25 percent of the glass bite dimension and maintain a minimum of 1/8 inch clearance between the member and the edge of the glass, panel, or other component.
   c. Limit the wind load deflection of any member to 1/240 plus 1/4 inch of the clear span, based on "pinned" ends.
   d. Limit the wind load deflection of corner mullions to the span as specified above, with the specified pressure acting on one face of the building with no pressure acting on the adjacent face, or 1/2 the specified pressure acting on one face of the building with 1/2 the specified suction acting on the adjacent face, whichever is the greatest.
   e. No wall element shall sustain permanent deflection of glass breakage under maximum design load.
   f. The panels and their connections shall accommodate movements of the structure resulting from lateral forces. Provide connections with sufficient ductility to preclude brittle failure, at or near, welds.
   g. Framing Sizes: 2 inches x 6 inches where indicated on the drawings or increased sizes to accommodate loading.

PART 3 – EXECUTION

3.01 PREPARATION

A. Obtain hardware templates from finish hardware supplier.

3.02 SURFACE CONDITIONS

A. Examine the areas and conditions under which Work of this Section will be performed. Correct conditions detrimental to timely and proper completion of the Work. Do not proceed until unsatisfactory conditions are corrected.

B. Clean glazing channels, stops, and rabbets to receive the glazing materials, making free from obstructions and deleterious substances which might impair the work.

1. Remove protective coatings which fail in adhesion or interfere with bond of sealants.
2. Comply with manufacturers' instructions for final wiping of surfaces immediately prior to application of primer and glazing compounds or tapes.
3. Prime surfaces to receive glazing compounds in accordance with manufacturer's recommendations.

3.03 INSTALLATION

A. Inspect each piece of glass immediately prior to start of installation.
   1. Do not install items which are improperly sized, have damaged edges, or are scratched, abraded, or damaged in any other manner.
   2. Do not remove labels from glass until so directed by the Architect.
   3. Install glass so distortion waves, if present, run in the horizontal direction.

B. Locate setting blocks at sills one quarter of the width of the glass in from each end of the glass, unless otherwise recommended by the glass manufacturer.
   1. Use blocks of proper size to support the glass in accordance with the manufacturer's recommendations.
   2. Provide spacers for all glass sizes larger than 50 united inches, to separate glass from stops; except where continuous glazing gaskets or felts are provided.
      a. Locate spacers no more than 24 inches apart, and no closer than 12 inches to a corner.
      b. Place spacers opposite on another.
      c. Make bite of spacer on glass 1/4 inch or more.

C. Set glass in a manner which produces the greatest possible degree of uniformity in appearance.

D. Do not use two (2) different glazing materials in the same joint system unless the joint use is approved in advance by the Architect.

E. Mask, or otherwise protect, surfaces adjacent to installation or sealants.

F. Install all glass, gasket, and aluminum framing in accordance with manufacturer's printed instructions. Installed windows units shall conform to AAMA 502 minimum requirements for air and water infiltration.

G. Caulk joints where indicated to meet performance specifications using materials specified in Sealants section. Follow sealant manufacturer’s printed instructions for the installation of his product.

H. Erection Tolerances:
   1. Maximum Deviation from Vertical: 1/8 inch in any story and 1/4 inch in any 45 foot run.
   2. Maximum Deviation from Horizontal: 1/8 inch in any 30 foot run.
   3. Maximum Deviation from True Alignment: 1/32 inch for any two (2) abutting units. Allow no edge projections.
   4. Maximum Joint Gap: 1/32 inch.

5. Maximum Openings Between Movable Glazing Stop and Adjacent Member: 1/32 inch.

3.04 PROTECTION AND ADJUSTMENTS

A. Protect glass from breakage after installation by promptly installing streamers or ribbons suitably attached to the framing and held free from glass. Do not apply warning markings, streamers, ribbons, or other items directly to the glass except as specifically directed by the Architect.

B. Adjust windows as necessary for smooth and weather tight operation and leave windows clean and free of construction debris.

END OF SECTION 08 80 00

SECTION 08 91 00 - METAL LOUVERS

PART 1 – GENERAL

1.01 SUMMARY

A. Section Includes: Fixed wall louvers and accessories.

1.02 PERFORMANCE REQUIREMENTS

A. Structural Requirements: Design louvers to safely withstand dead load and live loads prescribed by governing building code.

B. Thermal Movement: Design to accommodate expansion and contraction resulting from normal air temperature range of zero to 120 degrees F, solar heat gain, and nighttime re-radiation without buckling, undue stress on structural elements, reduction of performance, or other detrimental effects.

1.03 SUBMITTALS

A. Product Data.

B. Shop Drawings: Show elevations, field measurements (if applicable), reinforcement, anchorages, and expansion provisions.

C. Samples for Selection of Coated Finishes: Coating manufacturer's color selection data.

D. Samples for Verification of Coated Finishes: For each type and color of coated finish, submit 12-inch-long sections of extrusions or formed sections and 6-inch-square sheets.

1.04 PROJECT CONDITIONS

A. Field Measurements: Where conditions permit, take field measurements and determine actual installed positions of louvers before beginning louver fabrication.

1.05 WARRANTY

A. Warranty: Submit written warranty signed by the manufacturer guaranteeing fluoropolymer finish for 20 years after substantial completion, without reducing or otherwise limiting any other rights to correction which the Owner may have under the Contract Documents. Failure includes cracking, peeling, blistering, chalking, and fading in excess of 3 NBS points.

PART 2 – PRODUCTS

2.01 MANUFACTURERS

A. Wall Louvers: Products of the following manufacturers, provided they comply with requirements of the contract documents, will be among those considered acceptable:
1. Airline Products Company.
2. Airolite Company.

3. All-Lite Metal Company.
4. Construction Specialties, Inc.
5. Reliable Products/Hart & Cooley, Inc.
6. Ruskin

2.02 MATERIALS

A. Aluminum Extrusions: ASTM B 221, manufacturer's standard alloy and temper for application and finish required.

B. Fasteners:
1. For Aluminum Members: Aluminum, stainless steel, or galvanized steel.
2. For Steel or Galvanized Steel Members: Stainless steel or galvanized steel.
3. For Stainless Steel Members: Stainless steel.
4. Finish exposed-to-view fastener heads to match adjacent surface.

C. Anchors and Inserts: Hot-dip galvanized steel or nonferrous metal.

D. Bituminous Paint: SSPC-Paint 12; cold-applied asphalt mastic.

2.03 FIXED WALL LOUVERS

A. Louvers: Drainable blade, standard mullion type.
1. Depth: 4-inches.
2. Fabricate blades and frame from extruded aluminum; minimum thickness: 0.125 inch.
3. Performance requirements:
a. Minimum free area: 45 percent.
b. Design air velocity: 500 feet per minute.
c. Maximum static pressure drop at design velocity: 0.18 inch water.
1) Velocity at which water penetration begins: Greater than design velocity.
4. Finish: Kynar 500.
5. Accessories: Insect screens, subsill flashing.

2.04 WALL LOUVER ACCESSORIES

A. Screens: Removable type; provide screens for indicated exterior louvers.
1. Frame: Fabricate from same material used for louver. Miter and reinforce frame corners.

a. Fabricate frame from extruded or formed metal. Provide insert or driven spline for mesh attachment. Frame must be capable of being rewired.
2. Insect screen mesh: 18 by 16 mesh, 0.011 inch aluminum wire.
3. Position screen on inner louver face; attach using machine screws located 3 inches from corner and 12 inches on center between corners.

2.05 FABRICATION

A. Provide complete, shop-fabricated units, unless unit size dictates shipment in pieces; mark each component as required for proper field assembly.

B. Minimize the necessity for field assembly and field modifications. Coordinate shop drawings, field measurements, and shop fabrication.

C. Fabricate frames to indicated profiles with features and clearances to suit installation conditions.

1. Include integral sills of finish and construction to match louver. At locations indicated or where required to prevent drainage infiltration, provide sill extensions or subsill flashings of same finish and material as louver.
2. Provide clearance or recesses as required to accommodate sealant between louver and adjacent construction.

D. Provide shop-welded joints between framing components, and between framing components and fixed louver blades, unless otherwise indicated or where field assembly is unavoidable.

E. Provide uniform spacing between blades, including gap between blades and exposed face of head and sill members.

F. Provide vertical mullions of type indicated.

2.06 FINISHES

A. Finish: High-Performance Organic Coating.

1. Fluoropolymer Two-Coat Coating System: Manufacturer's standard two-coat, thermocured system consisting of specially formulated inhibitive primer and fluoropolymer color topcoat containing not less than 70 percent polyvinylidene fluoride resin by weight; complying with AAMA 605.2.

PART 3 – EXECUTION

3.01 EXAMINATION

A. Verify that substrates and openings to receive louvers are rigidly set, at proper lines and elevation, properly sized, and ready to receive louvers.

B. Do not proceed with installation until conditions detrimental to proper installation have been corrected.

3.02 PREPARATION

A. Coat contact surfaces of dissimilar metals with one or more coats of bituminous paint. The following metals are not considered dissimilar: Aluminum, stainless steel, and zinc.

B. Apply one 15-mil dry film thickness coat of bituminous isolation coating to metal surfaces, other than galvanized steel, which will be in contact with cementitious materials.

3.03 INSTALLATION

A. Install louvers in accordance with manufacturer's instructions and shop drawings.

B. Coordinate louver installation with adjacent elements of building envelope to ensure watertight construction.

C. Set units and flashings in proper location, plumb and true, free of warp or twist.

D. Fit joints tightly; where joint sealers are to be installed, make joints of sizes required.

3.04 CLEANING

A. Remove protective material from prefinished surfaces immediately after installation.

B. Wash exposed surfaces using mild detergent; thoroughly clean inside corners.

C. Remove excess sealant by moderate use of mineral spirits or other solvent recommended by sealant manufacturer.

D. Touch up marred or abraded areas of finished elements. If satisfactory touch-up cannot be accomplished, remove and replace element.

END OF SECTION 08 91 00

SECTION 09 21 16 - GYPSUM BOARD ASSEMBLIES

PART 1 – GENERAL

1.01 SUMMARY

A. Provide gypsum drywall work including metal support systems.

1.02 SUBMITTALS

A. In accordance with Contract Conditions and Division 1, submit for review product data and manufacturer's load and deflection criteria annotated to show each stud gage and spacing proposed for required applications.

1.03 REFERENCE STANDARDS

A. Applicable ANSI, ASTM, Gypsum Association and UL Standards.

1.04 QUALITY ASSURANCE

A. Comply with governing codes and regulations. Provide products of acceptable manufacturers which have been in satisfactory use in similar service for three years. Use experienced installers. Deliver, handle, and store materials in accordance with manufacturer's instructions.

B. Tolerances:
1. For exposed work, maximum 1/16" difference in true plane at joints between adjacent boards before finishing. After finishing, joints shall be invisible. No gaps or voids between gypsum board units or between drywall and adjacent work, unless detailed otherwise. Maximum 1/8" in 10' deviation from true plane, plumb and level in finished work.
2. For concealed work (area separation partitions in attic), maximum difference in true plane at joints, 3/32"; bed and tape joints only.

C. Where fire ratings and U.L. design numbers are included, provide only systems which are identical to those tested in accordance with ASTM E 119 and to referenced designations in UL Fire Resistance Directory.

PART 2 – PRODUCTS

2.01 MATERIALS

A. Gypsum board: ASTM C 36, 5/8" type "X"; U.S. Gypsum, Gold Bond, Domtar or equal acceptable to Architect. Provide water-resistant type ("green board" for walls and ceilings in wet and damp areas (e.g. Clinic Shower). Provide other special types or thicknesses where indicated or required.

B. Drywall framing: Screw-type steel studs, ASTM C 645; use 20 or 25 gage as indicated on Drawings, or if not indicated, as recommended by manufacturer for height required, for maximum L/240 deflection; provide 7/8" metal furring channels where shown.

C. Use diagonal metal stud bracing to structure where required for stiffness.

D. Ceiling suspension and furring materials: Steel runners and galvanized hanger wire.

E. Joint reinforcement: ASTM C 475 paper tape and ready-mixed or job-mixed vinyl joint compound. Provide two-compound treatment, one compound for bedding, and a compatible compound for finishing.

F. Accessories: Galvanized steel runner track, slotted head track, J-beads, corner beads, casing beads, control joints, insulation stick-clips and other materials as required for a complete installation.

G. Sealant: U.S. Gypsum Acoustical Sealant or equal acceptable to Architect. Where required to meet fire resistance ratings, provide non-shrinking, non-migrating polyisobutylene/polybutene sealant.

H. Drywall system requirements:
1. Lateral loading: 5 psf.
2. Deflection limit: 1/240 of partition height.
3. Sound transmission class: 35 STC Minimum.

I. Acoustical Insulation: Mineral fiber batts; thickness as indicated. Refer to Specification Section 07 21 00 for additional information.

J. Blocking: Fire-retardant treated wood blocking in nominal 2" thickness.

PART 3 – EXECUTION

3.01 INSTALLATION

A. Comply with system manufacturer's instructions for product delivery, storage and handling and environmental conditions, and with installation instructions and recommendations. Protect steel stud materials and metal accessories from rusting.

B. Provide additional framing and blocking to support fixtures, equipment, accessories and all other work which is connected to gypsum drywall systems.

C. Comply with ASTM C840 and GA 216; except as otherwise indicated, extend fire-rated partitions to underside of deck above ceiling; extend chase walls at least 6" above ceilings; extend other partitions at least 3" above ceilings.

D. Install framing system studs at spacing(s) indicated on drawings. Provide additional studs at corners, tees, openings and control joints and elsewhere where required.

E. Use full length studs between runner tracks.

F. Friction fit studs to runner tracks by positioning and rotating into place. Provide positive attachment to runner tracks for studs located at partition corners and intersections, and studs adjacent to openings using 3/8" self-tapping screws or stud clinching tool on both flanges of studs.

G. Provide trim accessories of the sizes required for the applications shown and specified, fabricated from galvanized steel, and of the following types:
   1. Provide metal corner bead at external corners with smooth rigid nose and perforated and knurled flanges.

H. Provide fire-rated systems where indicated and where required by authorities having jurisdiction. Unless otherwise required to meet code or UL requirements, fill expansion joints and gaps at perimeter and penetrations with compressible fire-retardant filler, and seal with fire-retardant sealant.

I. Provide acoustical insulation where indicated on drawings in accordance with manufacturer's instructions.

J. Install boards perpendicular to framing members. Do not allow butt-to-butt joints and joints that do not fall over framing members.

K. Install trim and joint treatment in strict compliance with manufacturer's instructions and recommendations. Install trim in continuous lengths up to maximum lengths available to minimize intermediate joints between ends or corners. Sand and leave ready for finish painting.

L. Provide Fry Reglet F-molding where indicated on drawings.

M. All rated assemblies shall be labeled in accordance with Section 09 91 00.

N. All rated assemblies shall be labeled in accordance with 07 84 13.

END OF SECTION 09 21 16

SECTION 09 30 13 - CERAMIC TILE

PART 1 - GENERAL

1.01 SUMMARY: Furnish and install ceramic tile work.

1.02 REFERENCE STANDARDS: Comply with applicable portions of ASTM and ANSI Standards and the Tile Installation Handbook, 1993 edition, published by the Tile Council of America.

1.03 SUBMITTALS: In accordance with Division 1, submit for review samples, product data, mock-ups.

1.04 QUALITY ASSURANCE: Comply with governing codes and regulations. Provide products of acceptable manufacturers which have been in satisfactory use in similar service for three years. Use experienced installers. Deliver, handle, and store materials in accordance with manufacturer's instructions.

PART 2 - PRODUCTS

2.01 MATERIALS

A. Standard grade tile complying with ANSI 137.1-1980; impervious unglazed porcelain ceramic tile except as otherwise noted. Provide at least two percent extra tile in each color and pattern.

B. Floor tile: Unglazed porcelain ceramic tile.
1. As indicated on finish schedule

C. Wall tile: Unglazed porcelain ceramic tile.
1. As indicated on finish schedule

D. Accent Tile:
1. As indicated on finish schedule

E. Tile and grout colors:
1. As indicated on finish schedule

F. Mortar setting leveling/sloping beds, setting beds, bond coats etc.: Comply with applicable ANSI and TCA standards.

G. Grout:
1. Latex portland cement grout;
2. As indicated on finish schedule

H. Trim: Matching field tile composition, color, size, texture; shapes as required.

I. Base:
1. As indicated on finish schedule

J. Thresholds: Schluter – Reno-V edge protection with adjustable transition arm.

2.02 SETTING METHODS

A. Floors: Set in 1-1/2" plastic portland cement setting bed at floor drain locations, and thin set elsewhere. See drawings for locations.

B. Walls: Thin-set (TCA 122.87) latex-portland cement process. No organic adhesives shall be used.

C. Grout Joints, unless otherwise indicated:
1. Joints in each type of tile shall appear straight and uniform, without noticeable variations in width.
2. Ceramic tile: 3/32".

PART 3 - EXECUTION

3.01 INSTALLATION

A. Comply with applicable Tile Council of America and ANSI Standard Specifications for Installation. Comply with manufacturer's instructions and recommendations.

B. Lay tile in grid pattern as provided by Architect with alignment of floor, base, walls and trim grids. Layout to provide uniform joint widths and to minimize cutting; do not use less than 1/2 tile units.

C. Provide sealant joints where recommended by TCA and approved by Architect.

D. Grout and cure, clean and protect.

END OF SECTION 09 30 13

SECTION 09 51 00 - ACOUSTICAL CEILINGS

1.01 SECTION INCLUDES

A. Suspension system (Grid) and accessories required to complete work.

B. Acoustical lay-in panels, with hold down clips, spacing clips, moldings, and accessories required to complete work.

1.02 RELATED WORK

A. Section 09 21 16, Gypsum Board Assemblies: Wallboard used as fire protection over light fixtures.

B. Division 23, Heating, Ventilating and Air Conditioning (HVAC): Air diffusers and mechanical items penetrating ceiling.

C. Division 26, Electrical: Lighting and electrical items penetrating ceiling.

1.03 SUBMITTALS

A. Product Data:
1. Manufacturer's specifications and other data needed to prove compliance with specified requirements.
2. Manufacturer's installation instructions.

B. Samples:
1. 12-inch x 12-inch sample of each ceiling panel.
2. 12-inch long sample of each type grid and actual accessories.

1.04 INSTALLATION CONFERENCE

A. Refer to Section 01 31 00, Project Management and Coordination.

1.05 REFERENCES

A. ASTM International (ASTM)
1. A641, Zinc-Coated (Galvanized) Carbon Steel Wire
2. C423, Sound Absorption and Sound Absorption Coefficients by the Reverberation Room Method
3. C635, Metal Suspension Systems for Acoustical Tile and Lay-in Panel Ceilings
4. C636, Installation of Metal Suspension Systems for Acoustical Tile and Lay-in Panel Ceilings
5. E84, Test Method for Surface Burning Characteristics of Building Materials
6. E413, Standard Classification for Determination of Sound Transmission Class
7. E1264, Standard Classification for Acoustical Ceiling Products

B. Federal Specification (FS)
1. SS-S-118B, Sound Controlling (Acoustical) Tiles and Panels

C. Underwriters Laboratories (UL)
1. Assembly as specified or noted on drawings

1.06 COORDINATION

A. Coordinate Work of this Section with work under Division 23, Mechanical for location of dampers in diffusers and other mechanical items penetrating ceiling and Division 26, Electrical for location of light fixtures and other electrical items penetrating ceiling.

PART 2 – PRODUCTS

2.1 ACCEPTABLE MANUFACTURERS

A. Specifications are based on products of named manufacturers. Manufacturers listed whose product meets or exceeds the specifications may be used on the Project. Other manufacturers must have a minimum of five (5) years experience manufacturing products meeting or exceeding the specifications and comply with Division 1 requirements regarding substitutions to be considered.
1. Suspension System (Grid):
a. Armstrong World Industries, Inc. (Basis of Specification)
b. BPB Celotex
c. Chicago Metallic
d. USG Interiors,Inc.(Donn)
2. Acoustical Lay-in Panels:
a. Armstrong World Industries, Inc. (Basis of Specification)
b. BPB Celotex / Capaul
c. Conwed Designscape
d. USG Interiors, Inc.

2.2 MATERIALS

A. Suspension System (Grid): Typical.
1. Type: ASTM C635, intermediate duty; exposed T; components die cut and interlocking.
2. Materials: Commercial quality cold rolled steel with galvanized coating.
3. Exposed Grid Surface Width: 15/16 inch.
4. Fire Resistance Rating: One (1) or two (2) hour fire rated, where scheduled on drawings.
5. Grid Finish: White. Unless noted otherwise.
6. Accessories:
a. Perimeter moldings.
b. Approved Product/Manufacturer: “Prelude XL 15/16” or “Prelude XL Fire Guard 15/16” at rated areas as manufactured by Armstrong World Industries, Inc., or Architect approved equal.

B. Hanger Wire: Galvanized carbon steel in accordance with ASTM A641, soft temper, pre-stretched, with a yield stress load of at least three (3) times the design load, but not less than 12 gauge in diameter.

C. Lay-in Panels (Re: Room Finish Schedule for Locations):
1. Lay-in Acoustical Panels (Ultima 1911):
a. Material: Wet-formed mineral fiber.

b. Size: 24-inches x 24-inches x 3/4-inch thick.
c. Edge Detail: Beveled Tegular
d. NRC: 0.60 minimum in accordance with ASTM E1264.
e. CAC: 35 minimum in accordance with ASTM E1264.
f. Surface Finish: Factory applied white vinyl latex paint, white unless noted otherwise.
g. Fire Resistance: Class A.
h. Pattern: Smooth texture.
i. Approved Product / Manufacturer: "Ultima Lay-In" conforming to No. 1911 as manufactured by Armstrong World Industries, Inc., or Architect approved equal by approved manufacturers.

2. Lay-in Acoustical Panels (Antimicrobial):
a. Material: Wet-felted.
b. Size: 24-inches x 24-inches x 15/16-inch
c. Edge Detail: Beveled Tegular
d. NRC: 0.85 minimum in accordance with ASTM E1264.
e. CAC: 35 minimum in accordance with ASTM E1264.
f. Surface Finish: Scrubbable factory applied white vinyl plastic paint.
g. Fire Resistance: Class A.
h. Pattern: Smooth.
i. Approved Product / Manufacturer: "Calla" conforming to No. 2822 as manufactured by Armstrong World Industries, Inc., or Architect approved equal by approved manufacturers.

D. Accessories:
1. At all locations (whether detailed or not) where an acoustical lay-in ceiling abuts a gypsum board ceiling in the same plane, provide a "W" shaped reveal or "shadow" molding similar to USG #MS 174.

2.3 EXTRA STOCK

A. At completion of work, deliver and store at site as directed not less than three (3) unopened cartons of each acoustical ceiling material used on the Project.

PART 3 – EXECUTION

3.1 PREPARATION

A. Insure that walls are flat and wall corners square. Commencing work shall be construed as acceptance of preceding work performed by others as suitable to receive Work of this Section.

B. Insure that wall control joints are flat and will not cause wall mould to misalign at those locations.

C. Coordinate all locations of cut panels with Architect in field prior to commencing work.

D. Do not install any ceiling panel until all above plumbing work, ceiling inspections and corrections have been completed.

3.2 SUSPENDED CEILING SYSTEMS

A. Install ceiling systems by skilled workmen in accordance with manufacturer's printed instructions, the approved shop drawings and reflected ceiling plans. Exposed surfaces of acoustical units shall be level and flush, with all joints straight and true. Cutting and fitting around all items protruding through acoustical ceiling shall be done neatly. Edge moldings and runners shall have flush hairline joints, with all corners mitered.

B. Install main beam and cross tees in accordance with reflected ceiling plans. Suspend main beams from structure (but not bridging) above by means of 12 gauge galvanized wire, spaced at 4 feet-0 inches o.c. both directions, wrapped tightly at least three (3) full turns. Do not hang wire supports from metal deck unless directed to do so by Architect and/or Structural Engineer. Powder actuated devices in metal deck are not permitted. Join cross tees to main beam with a positive interlock. Pop rivets will not be permitted for field splices.

C. Align beams or tees with angle molding at corners unless authorized by Architect.

D. At perimeter areas, secure angle molding to vertical surfaces, ends of tees to rest on bottom flange of molding. Attachment of cross “T”s’ to wall angles with pop rivets will not be permitted. Hanger wire at 45 degree approximately 10-inches long may be used to tie the grid to the wall above the ceiling to prevent eventual disengagement of the two (2) components.

E. Install lay-in panels with accessories and hold down clips as shown or required.

END OF SECTION 09 51 00

SECTION 09 65 00 - RESILIENT FLOORING

PART 1 – GENERAL

1.01 SUMMARY

A. Provide resilient flooring and base.

1.02 SUBMITTALS

A. In accordance with Contract Conditions and Division 1, submit for review samples, product data, and extra stock.

1.03 QUALITY ASSURANCE

A. Comply with governing codes and regulations. Provide products of acceptable manufacturers which have been in satisfactory use in similar service for three years. Use experienced installers. Deliver, handle, and store materials in accordance with manufacturer's instructions.

PART 2 – PRODUCTS

2.01 MATERIALS

A. Luxury Vinyl Tile: Complies with requirements for ASTM F 1700 Standard Specification for Solid Vinyl Floor Tile, Class 1, Type A
   1. As indicated on finish schedule

B. Rubber Floor Tile: Interlocking rubber flooring tiles.
   1. Flexco 36” x 36” “Sports Flooring”, as standard of design.

C. 4” Rubber Cove Base: Roppe, as standard of design.
   1. Provide base in rolls, not short straight sections.

D. Resilient Rubber Stair Tread without Riser
   1. Roppe #98 Vantage w/raised circular pattern and nosing

E. Color and pattern: As selected from manufacturer's full line of colors and textures.

F. Adhesive: Waterproof; approved by manufacturer of product applied.

G. Architect may select from any one of the following alternate manufacturers for proper color coordination.
   1. Tandus Centiva
   2. Armstrong
   3. Flexco
   4. Azrock
   5. Dinoflex

PART 3 – EXECUTION

3.01 INSTALLATION

A. Comply with manufacturer's instructions and recommendations.

B. Comply with manufacturer’s instructions and recommendations regarding moisture content of surface scheduled to receive flooring.

C. Prepare surfaces by cleaning, leveling and priming. Level to 1/8" in 10' tolerance.

D. Install with tight, well-aligned joints. Install tile in ashlar pattern; lay out to prevent less than 1/2-tile units.

E. Clean, polish, and protect from damage. Replace damaged materials.

F. Deliver to Owner for extra stock all unused extra tile and base including at least 1 unopened box of tile and base.

END OF SECTION 09 65 00

SECTION 09 91 00 - PAINTING

PART 1 - GENERAL

1.01 SUMMARY

A. This Section includes surface preparation and field painting of exposed exterior and interior items and surfaces.
   1. Surface preparation, priming, and finish coats specified in this Section are in addition to shop priming and surface treatment specified in other Sections.

B. Paint exposed surfaces, except where the paint schedules indicate that a surface or material is not to be painted or is to remain natural. If the paint schedules do not specifically mention an item or a surface, paint the item or surface the same as similar adjacent materials or surfaces whether or not schedules indicate colors. If the schedules do not indicate color or finish, the Architect will select from standard colors and finishes available.

C. Do not paint prefinished items, concealed surfaces, finished metal surfaces, operating parts, and labels.
   1. Labels: Do not paint over Underwriters Laboratories (UL), Factory Mutual (FM), or other code-required labels or equipment name, identification, performance rating, or nomenclature plates.

D. Submittals: For each paint system specified, provide the following:
   1. Material List: Provide an inclusive list of required coating materials. Indicate each material and cross-reference specific coating, finish system, and application. Identify each material by manufacturer's catalog number and general classification.
   2. Manufacturer's Information: Provide manufacturer's technical information, including label analysis and instructions for handling, storing, and applying each coating material proposed for use.

E. Samples for Initial Selection: Manufacturer's color charts showing the full range of colors available for each type of finish-coat material indicated. After color selection, the Architect will furnish color chips for surfaces to be coated.

F. Samples for Verification: Of each color and material to be applied, with texture to simulate actual conditions, on representative Samples of the actual substrate.
   1. Provide stepped Samples, defining each separate coat, including block fillers and primers. Use representative colors when preparing Samples for review. Resubmit until required sheen, color, and texture are achieved.
   2. Provide a list of materials and applications for each coat of each sample. Label each sample for location and application.

G. Source Limitations: Obtain block fillers, primers, and undercoat materials for each coating system from the same manufacturer as the finish coats.

H. Benchmark Samples (Mockups): Provide a full-coat benchmark finish sample of each type of coating and substrate required on the Project. Comply with procedures specified in PDCA P5. Duplicate finish of approved prepared samples.

1. The Architect will select one room or surface to represent surfaces and conditions for each type of coating and substrate to be painted. After permanent lighting and other environmental services have been activated, apply coatings in this room or to each surface as specified.
2. After finishes are accepted, the Architect will use the room or surface to evaluate coating systems of a similar nature.

J. Deliver materials to the Project Site in manufacturer's original, unopened packages and containers bearing manufacturer's name and label.

K. Store materials not in use in tightly covered containers in a well-ventilated area at a minimum ambient temperature of 45 deg F (7 deg C). Maintain containers in clean condition, free of foreign materials and residue. Protect from freezing. Keep storage area neat and orderly. Remove oily rags and waste daily.

L. Project Conditions: Do not apply paint in snow, rain, fog, or mist; or when the relative humidity exceeds 85 percent; or at temperatures less than 5 deg F (3 deg C) above the dew point; or to damp or wet surfaces.

M. Extra Materials: Furnish extra paint materials from the same production run as the materials applied in the quantities described below. Package paint materials in unopened, factory-sealed containers for storage and identify with labels describing contents. Deliver extra materials to the Owner.
1. Quantity: Furnish the Owner with an additional 5 percent, but not less than 1 gal. (3.785 L) or 1 case, as appropriate, of each material and color applied.

PART 2 - PRODUCTS

2.01 MATERIAL

A. Material Compatibility: Provide block fillers, primers, undercoats, and finish-coat materials that are compatible with one another and the substrates indicated under conditions of service and application, as demonstrated by manufacturer based on testing and field experience.

B. Material Quality: Provide manufacturer's best-quality paint material of the various coating types specified. Paint-material containers not displaying manufacturer's product identification will not be acceptable.
1. Proprietary Names: Use of manufacturer's proprietary product names to designate colors or materials is not intended to imply that products named are required to be used to the exclusion of equivalent products of other manufacturers.

C. Colors: Provide custom colors of the finished paint systems to match the Architect's samples.
1. Verify sheen of all products with Architect.

PART 3 - EXECUTION

3.01 INSTALLATION

A. Examine substrates, areas, and conditions under which painting will be performed for compliance with paint application requirements. Do not begin to apply paint until unsatisfactory conditions have been corrected and surfaces receiving paint are thoroughly dry.

B. Coordination of Work: Review other Sections in which primers are provided to ensure compatibility of the total system for various substrates.

C. Preparation: Remove hardware and hardware accessories, plates, machined surfaces, lighting fixtures, and similar items already installed that are not to be painted. If removal is impractical or impossible because of the size or weight of the item, provide surface-applied protection before surface preparation and painting. After completing painting operations in each space or area, reinstall items removed using workers skilled in the trades involved.

D. Cleaning: Before applying paint or other surface treatments, clean the substrates of substances that could impair the bond of the various coatings. Remove oil and grease before cleaning. Schedule cleaning and painting so dust and other contaminants from the cleaning process will not fall on wet, newly painted surfaces.

E. Surface Preparation: Clean and prepare surfaces to be painted according to manufacturer's written instructions for each particular substrate condition.

1. Cementitious Materials: Remove efflorescence, chalk, dust, dirt, grease, oils, and release agents. Roughen as required to remove glaze. If hardeners or sealers have been used to improve curing, use mechanical methods of surface preparation. Use abrasive blast-cleaning methods if recommended by paint manufacturer.
    a. Determine alkalinity and moisture content of surfaces by performing appropriate tests. If surfaces are sufficiently alkaline to cause the finish paint to blister and burn, correct this condition. Do not paint surfaces where moisture content exceeds that permitted in manufacturer's written instructions.
2. Wood: Clean surfaces of dirt, oil, and other foreign substances with scrapers, mineral spirits, and sandpaper, as required. Sand surfaces exposed to view smooth and dust off.
    a. Scrape and clean small, dry, seasoned knots, and apply a thin coat of white shellac or other recommended knot sealer before applying primer. After priming, fill holes and imperfections in finish surfaces with putty or plastic wood filler. Sand smooth when dried.
    b. Prime, stain, or seal wood to be painted immediately on delivery. Prime edges, ends, faces, undersides, and backsides of wood, including cabinets, counters, cases, and paneling.
    c. Seal tops, bottoms, and cutouts of unprimed wood doors with a heavy coat of varnish or sealer immediately on delivery.
3. Ferrous Metals: Clean ungalvanized ferrous-metal surfaces that have not been shop coated; remove oil, grease, dirt, loose mill scale, and other foreign substances. Use solvent or mechanical cleaning methods that comply with the Steel Structures Painting Council's (SSPC) recommendations.
    a. Touch up bare areas and shop-applied prime coats that have been damaged. Wire-brush, clean with solvents recommended by paint manufacturer, and touch up with the same primer as the shop coat.

4. Galvanized Surfaces: Clean galvanized surfaces with nonpetroleum-based solvents so surface is free of oil and surface contaminants. Remove pretreatment from galvanized sheet metal fabricated from coil stock by mechanical methods.

F. Materials Preparation: Mix and prepare paint materials according to manufacturer's written instructions.
1. Stir material before application to produce a mixture of uniform density. Stir as required during application. Do not stir surface film into material. If necessary, remove surface film and strain material before using.
2. Use only thinners approved by paint manufacturer and only within recommended limits.

G. Application: Apply paint according to manufacturer's written instructions. Use applicators and techniques best suited for substrate and type of material being applied.
1. Paint colors, surface treatments, and finishes are indicated in the schedules.
2. Do not paint over dirt, rust, scale, grease, moisture, scuffed surfaces, or conditions detrimental to formation of a durable paint film.
3. Provide finish coats that are compatible with primers used.
4. The term "exposed surfaces" includes areas visible when permanent or built-in items are in place. Extend coatings in these areas, as required, to maintain the system integrity and provide desired protection.
5. Paint surfaces behind movable equipment and furniture the same as similar exposed surfaces. Before the final installation of equipment, paint surfaces behind permanently fixed equipment or furniture with prime coat only.
6. Paint back sides of access panels and removable or hinged covers to match exposed surfaces.
7. Finish exterior doors on tops, bottoms, and side edges the same as exterior faces.
8. Sand lightly between each succeeding enamel or varnish coat.
9. Label fire rated partitions as required by Authority Having Jurisdiction but at a minimum 15 feet from end of wall section and spaced 30 feet in Red Paint (SW 6871 “Positive Red”). Lettering to be stenciled not less than 3 inches and minimum 3/8” stroke.
   a. Stencil to read – “1 HOUR FIRE RATED ASSEMBLY – PROTECT ALL OPENINGS AND PENETRATIONS”

H. Scheduling Painting: Apply first coat to surfaces that have been cleaned, pretreated, or otherwise prepared for painting as soon as practicable after preparation and before subsequent surface deterioration.
1. The number of coats and the film thickness required are the same regardless of application method. Do not apply succeeding coats until the previous coat has cured as recommended by the manufacturer. If sanding is required to produce a smooth, even surface according to manufacturer's written instructions, sand between applications.
2. If undercoats, stains, or other conditions show through final coat of paint, apply additional coats until paint film is of uniform finish, color, and appearance. Give special attention to ensure edges, corners, crevices, welds, and exposed fasteners receive a dry film thickness equivalent to that of flat surfaces.
3. Allow sufficient time between successive coats to permit proper drying. Do not recoat surfaces until paint has dried to where it feels firm, does not deform or feel

sticky under moderate thumb pressure, and where application of another coat of paint does not cause the undercoat to lift or lose adhesion.

I. Application Procedures: Apply paints and coatings by brush, roller, spray, or other applicators according to manufacturer's written instructions.

J. Minimum Coating Thickness: Apply paint materials no thinner than manufacturer's recommended spreading rate. Provide the total dry film thickness of the entire system as recommended by the manufacturer.

K. Block Fillers: Apply block fillers to concrete masonry block at a rate to ensure complete coverage with pores filled.

L. Prime Coats: Before applying finish coats, apply a prime coat of material, as recommended by the manufacturer, to material that is required to be painted or finished and that has not been prime coated by others. Recoat primed and sealed surfaces where evidence of suction spots or unsealed areas in first coat appears, to ensure a finish coat with no burn through or other defects due to insufficient sealing.

M. Completed Work: Match approved samples for color, texture, and coverage. Remove, refinish, or repaint work not complying with requirements.

N. Field Quality Control: The Owner reserves the right to engage the services of an independent testing agency to sample the paint material being used. Samples of material delivered to the Project will be taken, identified, sealed, and certified in the presence of the Contractor.
1. The testing agency will perform appropriate tests as required by the Owner.
2. If tests show material being used does not comply with specified requirements, the Contractor shall remove noncomplying paint from the site, pay for testing, and repaint surfaces previously coated with the rejected paint. If necessary, the Contractor may be required to remove rejected paint from previously painted surfaces if, on repainting with specified paint, the 2 coatings are incompatible.

O. Cleanup: At the end of each workday, remove empty cans, rags, rubbish, and other discarded paint materials from the site.
1. After completing painting, clean glass and paint-spattered surfaces. Remove spattered paint by washing and scraping. Be careful not to scratch or damage adjacent finished surfaces.

P. Protect work of other trades, whether being painted or not, against damage by painting. Correct damage by cleaning, repairing or replacing, and repainting, as approved by Architect.

Q. Provide "Wet Paint" signs to protect newly painted finishes. Remove temporary protective wrappings provided by others to protect their work after completing painting operations.
1. At completion of construction activities of other trades, touch up and restore damaged or defaced painted surfaces. Comply with procedures specified in PDCA P1.

R. Paint Schedules: Provide the following paint systems for the various substrates indicated:

3.02 EXTERIOR PAINT SCHEDULE

A. Ferrous Metal: Provide the following finish systems over exterior ferrous metal. Primer is not required on shop-primed items.
1. Semigloss, Acrylic-Enamel Finish: 2 finish coats over a rust-inhibitive primer.
a. Primer: Rust-inhibitive metal primer applied at spreading rate recommended by the manufacturer to achieve a total dry film thickness of not less than 1.3 mils (0.033 mm).
1) Sherwin-Williams: B50Z Kem-Bond HS Universal Primer.
2) Glidden Professional: 4160 DevGuard
3) Moore: IronClad Retardo Rust-Inhibitive Paint #163.

b. First and Second Coats: Semigloss, exterior, acrylic-latex enamel applied at spreading rate recommended by the manufacturer to achieve a total dry film thickness of not less than 1.3 mils (0.033 mm).
1) Sherwin-Williams: A100A82 Exterior Latex
2) Glidden Professional: 2416V Ultra-Hide 150 Semi Gloss
3) Moore: MoorGlo Latex House & Trim Paint #096.

B. Zinc-Coated Metal: Provide the following finish systems over exterior zinc-coated (galvanized) metal surfaces:
1. Semigloss, Acrylic-Enamel Finish: 2 finish coats over a galvanized metal primer.
a. Primer: Galvanized metal primer applied at spreading rate recommended by the manufacturer to achieve a total dry film thickness of not less than 1.2 mils (0.031 mm).
1) Sherwin-Williams B66W1 DTM Acrylic Primer/Finish
2) Glidden Professional 4020 Devflex DTM Primer/Finish
3) Moore: IronClad Galvanized Metal Latex Primer #155.
b. First and Second Coats: Semigloss, exterior, acrylic-latex enamel applied at spreading rate recommended by the manufacturer to achieve a total dry film thickness of not less than 1.3 mils (0.033 mm)
1) Sherwin-Williams A100A82 Exterior Latex
2) Glidden Professional 2416V Ultra-Hide 150 Semi Gloss
3) Moore: MoorGlo Latex House & Trim Paint #096.

C. Aluminum: Provide the following finish systems over exterior aluminum surfaces:
1. Semigloss, Acrylic-Enamel Finish: 2 finish coats over a primer.
a. Primer: Rust-inhibitive, acrylic- or alkyd-based, metal primer, as recommended by the manufacturer for use over aluminum, applied at spreading rate recommended by the manufacturer to achieve a total dry film thickness of not less than 1.0 mils (0.025 mm).
1) Sherwin-Williams B71Y1 DTM Wash Primer
2) Glidden Professional 4020 Devflex DTM Primer/Finish
3) Moore: Primer not required.
b. First and Second Coats: Semigloss, exterior, acrylic-latex enamel applied at spreading rate recommended by the manufacturer to achieve a total dry film thickness of not less than 1.3 mils (0.033 mm).
1) Sherwin-William A100A82 Exterior Latex
2) Glidden Professional 2416V Ultra Hide 150 Semi Gloss
3) Moore: MoorGlo Latex House & Trim Paint #096.

3.03 INTERIOR PAINT SCHEDULE

A. Concrete Masonry Units: Provide the following finish systems over interior concrete masonry block units:
1. Semi gloss, Acrylic-Enamel Finish: 2 finish coats over a block filler.
a. Block Filler: High-performance, latex-based, block filler applied at spreading rate recommended by the manufacturer to achieve a total dry film thickness of not less than 5.0 mils (0.13 mm).
1) Sherwin-Williams B25W25 PrepRite Masonry Primer
2) Glidden Professional 3010 Concrete coatings Block Filler
3) Moore: Moorcraft Interior & Exterior Block Filler #173.
b. First and Second Coats: Semigloss, acrylic-latex, interior enamel applied at spreading rate recommended by the manufacturer to achieve a total dry film thickness of not less than 1.3 mils (0.033 mm).
1) Sherwin-Williams B31 ProClassic Waterbourne
2) Glidden Professional 1406N Ultra Hide 250 Semi Gloss
3) Moore: Moore's Regal AquaGlo Vinyl-Acrylic Latex Enamel #333.

B. Gypsum Board: Provide the following finish systems over interior gypsum board surfaces:
1. Flat Acrylic Finish: 2 finish coats over a primer.
a. Primer: Latex-based, interior primer applied at spreading rate recommended by the manufacturer to achieve a total dry film thickness of not less than 1.1mils (0.028m).
1) Sherwin-Williams B28W200 PreRite 200 Interior Latex Primer
2) Glidden Professional 1000 High Hide Primer
3) Moore: Regal First Coat Interior Latex Primer & Underbody #216.
b. First and Second Coats: Flat, acrylic-latex-based, interior paint applied at spreading rate recommended by the manufacturer to achieve a total dry film thickness of not less than 1.4 mils (0.035 mm).
1) Sherwin-Williams B30W200 ProMar 200 Interior Flat Latex
2) Glidden Professional 1210V Ultra-Hide 150
3) Moore: Regal Wall Satin #215.

2. Semi gloss, Acrylic-Enamel Finish: 2 finish coats over a primer.
a. Primer: Latex-based, interior primer applied at spreading rate recommended by the manufacturer to achieve a total dry film thickness of not less than 1.1 mils (0.028 mm).
1) Sherwin-Williams B28W200 PrepRite 200 Interior Latex Primer
2) Glidden Professional 1000 High Hide Primer
3) Moore: Regal First Coat Interior Latex Primer & Underbody #216.

b. First and Second Coats: Semigloss, acrylic-latex, interior enamel applied at spreading rate recommended by the manufacturer to achieve a total dry film thickness of not less than 1.3 mils (0.033 mm).
1) Sherwin-Williams B31 ProClassic Waterborne Semi-Gloss
2) Glidden Professional 1406N Ultra Hide 250
3) Moore: Moore's Regal AquaGlo Vinyl-Acrylic Latex Enamel #333.

C. Ferrous Metal: Provide the following finish systems over ferrous metal:
1. Semigloss, Acrylic-Enamel Finish: One finish coat over an enamel undercoater and a primer.

a. Primer: Quick-drying, rust-inhibitive, alkyd-based or epoxy-metal primer, as recommended by the manufacturer for this substrate, applied at spreading rate recommended by the manufacturer to achieve a total dry film thickness of not less than 1.5 mils (0.038 mm).
   1) Sherwin-Williams B66W1 DTM Acrylic Primer/Finish
   2) Glidden Professional 4020 Devflex DTM Primer/Finish
   3) Moore: IronClad Retardo Rust-Inhibitive Paint #163.

b. Undercoat: Alkyd, interior enamel undercoat or semigloss, acrylic-latex, interior enamel, as recommended by the manufacturer for this substrate, applied at spreading rate recommended by the manufacturer to achieve a total dry film thickness of not less than 1.3 mils (0.033 mm).
   1) Sherwin-Williams B31 ProClassic Waterborne Semi-Gloss
   2) Glidden Professional 1406N Ultra Hide 250
   3) Moore: Moore's Alkyd Enamel Underbody #217.

c. Finish Coat: Semigloss, acrylic-latex, interior enamel applied at spreading rate recommended by the manufacturer to achieve a total dry film thickness of not less than 1.3 mils (0.033 mm).
   1) Sherwin-Williams B31 ProClassic Waterborne Semi-Gloss
   2) Glidden Professional 1406N Ultra-Hide 250
   3) Moore: Moore's Regal AquaGlo Vinyl-Acrylic Latex Enamel #333.

D. Cotton or Canvas Covering over Insulation: Provide the following finish system on cotton or canvas insulation covering:
   1. Flat Acrylic Finish: 2 finish coats. Add fungicidal agent to render fabric mildewproof.
      a. First and Second Coats: Flat, latex-based, interior paint applied atspreading rate recommended by the manufacturer.
         1) Sherwin-Williams B30W200 ProMar 200 Flat Latex
         2) Glidden Professional 1210V Ultra-Hide 150
         3) Moore: Regal Wall Satin #215.

END OF SECTION 09 91 00

SECTION 10 14 00 - SIGNAGE AND GRAPHICS

PART 1 - GENERAL

1.01 SUMMARY

A. Section Includes: Signage included, as indicated on drawings and as directed by Architect.

1.02 SUBMITTALS: In accordance with Division 1, submit for review samples, product data, sign schedule.

1.03 QUALITY ASSURANCE: Comply with governing codes and regulations. Provide products of acceptable manufacturers which have been in satisfactory use in similar service for three years. Use experienced installers. Deliver, handle, and store materials in accordance with manufacturer's instructions.

PART 2 - PRODUCTS

2.01 MANUFACTURER:

A. ASI, Signmart
B. South Texas Graphics
C. Texas Marking Products
D. Sign International

2.02 MATERIALS

A. Interior signage: Engraved laminated plastic identification, instruction and/or warning signs with contrasting core; colors as selected by Architect from manufacturer's standard range.
   1. Mounting: Surface mount on walls adjacent to doors except as otherwise directed by Architect or indicated on drawings.

B. Exterior Signage:
   1. Building identification signage: Refer to drawings.
   2. Other exterior signs: Refer to drawings.

C. Plaque: Cast aluminum; 18" x 24". Typeface(s), edge detail, background texture, finish and layout as directed by Architect; include Facility name, date, names and titles of Owner, Architect and Contractor. Refer to drawings.

PART 3 - EXECUTION

3.01 INSTALLATION

A. Submit proof of all signage to Owner and Architect prior to fabrication and installation for approval.

B. Install materials and systems in accordance with manufacturer's instructions and approved submittals. Use concealed mounting methods. Install materials and systems in proper relation to adjacent construction and with uniform appearance. Coordinate with work of other sections.

C. Restore damaged finishes and test for proper operation. Clean and protect work from damage.

END OF SECTION 10 14 00

SECTION 10 26 00 – WALL AND DOOR PROTECTION

PART 1 - GENERAL

1.01 SUMMARY

A. This Section includes Corner Guards

1.02 SUBMITTALS

A. Comply with requirements of Section 01 33 00 Submittals.

B. Product data: Submit manufacturer's product data.

C. Shop drawing: Submit shop drawings showing components, dimensions, anchorage details.

D. Samples for selection and verification of product pattern and finish.

1.03 QUALITY ASSURANCE

A. Design and Performance Criterial
   1. Flammability Characteristics: High impact vinyl components.
      a. Class A Interior wall finish (NFPA 101 Life Safety) when tested in accordance with ASTM E84.
         i. Flame Spread: 25 or less
         ii. Smoke Developed: 450 or less
      b. Classification of HB when tested in accordance with ASTM D635.

   2. Stain Resistance: High impact vinyl components.
      a. Material to be tested for stain resistance to various chemical reagents in accordance with ASTM D543.

   3. Bacterial and Fungal Growth: High impact vinyl components.
      a. Material must not support bacteria or fungal growth when tested in accordance with ASTM G21 and ASTM G22
   4. Impact Resistance: High impact vinyl components.
      a. Extruded profiles shall resist damage from impact at apex of 90 degree corner when tested in accordance with applicable sections of ASTM F476.
      b. Izod impact strength ASTM D256 method A notched, 23.8 ft-lbs/in average with no break.
      c. Charpy impact strength ASTM D6110 notched, 26.1 ft-lbs/in average with

B. Single source responsibility: Provide all product systems components from a single source.

1.04 DELIVERY, STORAGE, AND HANDLING

A. Delivery: Deliver materials to site in manufacturer's original, unopened containers and packaging with labels clearly indicating manufacturer and material.

B. Storage: Store materials indoors in a clean, dry area protected from damage where temperature and humidity remain stable and within 40 degree F (4 degree C) to 100 degree F (38 degree C). Materials must be stored flat.

C. Handling: Protect materials during handling and installation to prevent damage

1.05 PROJECT CONDITIONS

A. Environmental conditions: Do NOT install wall surface protection systems until the installation area is enclosed and weatherproof, and until the ambient temperature within the building is maintained at not less than 70 degree F (21 degree C) for not less than 72 hours prior to installation.

B. Installation locations must be enclosed weatherproofed, and climate controlled prior to commencing installation.

1.04 WARRANTY

A. Submit supplier's written warranty against defects in material and workmanship.

PART 2 - PRODUCTS

2.01 MANUFACTURERS

A. Babcock-Davis, 9300 73rd Avenue North, Brooklyn Park, MN, 55428

2.02 MATERIALS

A. Corner Guards

1. Stainless Steel Corner Guards: Model BCGS [Surface mount] [Recess Mount] fabricated from one-piece, formed metal with formed edge, 90 degree or 135 degree turn to match wall.
   a. Material: [Type 304] [Type 430] Stainless Steel, 16 Gauge with rounded edges, Satin No. 4 finish
   b. Wing Size; as specified between 1 inch (25.4 mm) and 3 inches (76 mm)
   c. Corner Radius: 1/8 inch (3.175 mm)
   d. Mounting: [Adhesive] [pre-drilled with mounting screws]
   e. Option: embossed patterns available in Type 304

2. Stainless Steel Corner End Wall Guards: Model BCGS-EW Surface mount Fabricated from one-piece, formed metal with formed edge
   a. Material: [Type 304] [Type 430] Stainless Steel, 16 gauge with rounded edges, Satin No. 4 finish
   b. Wing Size; as specified between 1 inch (25.4 mm) and 3 inches (76 mm)
   c. End wall size: as specified
   d. Corner Radius: 1/8 inch (3.175 mm)
   e. Mounting: Adhesive

PART 3 - EXECUTION

3.01 EXAMINATION

A. Examine the substrates and conditions under which the work is to be performed and notify the Contractor in writing of conditions detrimental to the proper and timely completion of the work. Do not proceed with the installation until unsatisfactory conditions have been corrected.

3.02 PREPARATION

A. Surface preparation: Prior to installation, cean surface to remove dirt, debris and loose particles. Perform additional preparation procedures as required per the manufacturer's instructions.

3.03 INSTALLATION

A. Install the work of this section in strict accordance with manufacturer's written instructions.

3.04 CLEAN UP COMPLETION

A. Upon completion of the work, remove excess materials, debris and rubbish resulting from the installation and leave the area in a clean and orderly condition.

END OF SECTION 10 26 00

SECTION 10 28 13 - TOILET ACCESSORIES

PART 1 – GENERAL

1.1 SECTION INCLUDES

A. Toilet accessories; shower accessories; and utility room accessories.

1.2 RELATED SECTIONS

A. Section 04 20 00, Unit Masonry
B. Section 05 40 00, Cold-Formed Metal Framing
C. Section 09 21 16, Gypsum Board Assemblies
D. Section 09 30 13, Ceramic Tile
E. Section 10 21 13.13, Toilet Partitions
F. Division 26 - Electrical

1.3 SUBMITTALS

A. Product Data:
1. Manufacturer's specifications and technical data.
2. Manufacturer’s installation instructions.
3. Manufacturer’s operation and maintenance instructions of units specified.
4. Provide schedule of materials and installation locations.

B. Shop drawings: Indicate size, material and finish. Show locations, installation procedures. Include details of joints, attachments, fasteners, clearances, and mounting heights.

1.4 MINIMUM COMPLIANCE STANDARDS

A. Comply with ANSI A117.1 and Texas Accessibility Standards (TAS) and with referenced standards specified with each product or material.

1.5 QUALITY STANDARDS

A. Design, finish and keying of items shall be the same.

B. Furnish items from one (1) manufacturer only unless otherwise specified or directed by Architect.

1.6 PRE-INSTALLATION CONFERENCE

A. Refer to Section 01 31 00, Project Management and Coordination.

1.7 COORDINATION

A. Coordinate the Work with placement of internal wall reinforcement and reinforcement of toilet partitions to receive anchor attachments.

1.8 WARRANTY

A. Warrant the work specified herein for three (3) years, or provide manufacturer's standard warranty for specified products, against becoming unserviceable or causing an objectionable appearance resulting from either defective or non-conforming materials and workmanship.

B. Defects shall include, but not be limited to:
1. Delamination or deterioration of finish
2. Noisy, rough or difficult operation
3. Failure to meet specified quality assurance requirements.

PART 2 – PRODUCTS

2.1 MANUFACTURERS

A. Manufacturers listed whose products meet or exceeds the specifications are approved for use on the Project. Other manufacturers must have a minimum of five (5) years experience manufacturing products meeting or exceeding the specifications and comply with Division 1 requirements regarding substitutions to be considered.
1. American Specialties, Inc. (ASI)
2. Bobrick Washroom Equipment, Inc
3. Bradley Corp.

B. Specifications are based on products of Bobrick Washroom Equipment, Inc., (281) 362-7515.

2.2 COMPONENTS

A. Accessories - General: Shop assembled, free of dents and scratches and packaged complete with anchors and fittings, steel anchor plates, adapters, and anchor components for installation.
1. Grind welded joints smooth.
2. Fabricate units made of metal sheet of seamless sheets, with flat surfaces.

B. Stainless Steel:
1. Stainless Steel Sheet: ASTM A666 Type 302 or 304.
2. Stainless Steel Tubing: ASTM A269, stainless steel.
3. Finish: No. 4 satin, unless otherwise specified
4. Thickness: 22 US Stainless gauge minimum

C. Chromium Plating:
1. Method: Over nickel
2. Standard: ASTM C456, Type SC 2

D. Fasteners, Screws, and Bolts: Hot dip galvanized, tamper-proof.

E. Expansion Shields: Fiber, lead, or rubber as recommended by accessory manufacturer for component and substrate.

F. Backing: Concealed backing to comply with local codes and as required for substrate conditions; or manufacturers' standard mounting kits.

2.3 FINISHING

A. Stainless Steel: No. 4 satin brushed, typical on all accessories, unless otherwise noted.

B. Baked Enamel: Pre-treat to clean condition, apply one coat primer and minimum two coats vitreous enamel.

C. Chrome / Nickel Plating: Satin finish.

D. Shop Primed Ferrous Metals: Pre-treat and clean, spray apply one coat primer and bake.

E. Back paint components where contact is made with building finishes to prevent electrolysis.

PART 3 – EXECUTION

3.1 MOUNTING LOCATIONS

A. Comply with ADA and TAS requirements. Refer to drawings. When not shown, submit supplier's recommendations for locations and mounting height before proceeding.

B. Contractor shall be responsible for supplying all opening, blocking, and other components necessary for installation of all toilet accessories.

C. Use approved theft-resistant type fasteners.

3.2 SCHEDULE

A. As a quality standard, Model Numbers shown which are not Owner furnished are products of Bobrick Washroom Equipment, Inc. and Bradley Corporation.

RESTROOM ACCESSORIES:

1. Grab Bars: (At Typical Accessible Toilet Stalls)
   a. Size / Finish: 1-1/2 inch diameter Satin Finish Stainless Steel.
   b. Clearance: 1-1/2 inch between rail and wall.
   c. Model No.: B-6806.
   d. Mounting: Attach with concealed mounting. Mount parallel to floor.
   e. Location: One (1) 36 inch behind toilet, and one (1) 42 inch long bar at side of toilet, at each accessible stall. Refer to drawings.

2. Toilet Paper Dispenser:
   a. Mounting: Surface.
   b. Model No.: Bobrick Model No. B-6637
   c. Locations: One (1) at each water closet. Refer to drawings.

3. Paper Towel Dispenser:
   a. Mounting: Surface
   b. Model B-359
   c. Locations: One (1) at each hand lavatory. Refer to drawings

4. L-Shaped Phenolic Shower Seat:
   a. Mounting: Surface
   b. Model B-5181 (left) B-5171 (right)

c. One (1) at each accessible shower

5. Mirrors:
   a. Mounting: Surface.
   b. Model No.: B-2908-2448
   c. Size/Locations: 24 inches x 48 inches, unless shown otherwise. One (1) at each lavatory. Refer to drawings.

6. Mop and Broom Holder:
   a. Mounting: Surface
   b. Model No.: B-239 x 34
   c. Capacity: Four (4) hooks, three (3) mop holders.
   d. Location: One (1) above mop sink. Refer to drawings.

7. Robe Hook with Bumper:
   a. Mounting: Surface
   b. Model No: B- 6827
   c. Fabrication: Solid aluminum casting with satin finish with hard rubber bumper.

8. L-Shaped Stainless Steel Grab Bar:
   a. Mounting: Surface
   b. Model B-68137
   c. One (1) at each accessible shower.

9. Heavy Duty White Vinyl Shower Curtain, Rod, and Hooks
   a. Mounting: Surface
   b. Model: B-204-2, B-201-1, B-6827, B-204-2, B-207
   c. One (1) assembly at each shower. Refer to Drawings.

10. ADA Shower Threshold
   a. Supplier: Trademark Hardware
   b. Mounting: Surface
   c. Install (1) at each accessible shower. Reference drawings and field measure for size requirements.

END OF SECTION 10 28 13

SECTION 10 44 00 - FIRE EXTINGUISHERS AND CABINETS

PART 1 - GENERAL

1.01 SUMMARY

A. Work Included: Portable fire extinguishers and cabinets.

1.01 SUBMITTALS

A. Product Data: Manufacturer's data showing compliance with contract documents.

B. Samples: Finishes of cabinets, on actual or similar material.

C. Operating and Maintenance Data: Instruction manual complying with NFPA 10 requirements.

D. Certification: Installer shall submit written certification that the fire extinguishers installed comply with the contract documents and are fully and correctly charged.

1.02 QUALITY ASSURANCE

A. Provide only fire extinguishers which comply with NFPA 10.

B. Labels: Provide only fire extinguishers which are listed and labeled by Underwriters Laboratories Inc., or Factory Mutual System.

1.03 PROJECT CONDITIONS

A. Do not deliver or install extinguishers until just before substantial completion.

B. Do not use permanent fire extinguishers for construction period fire protection.

1.04 MAINTENANCE

A. Provide a maintenance contract to Owner for a period of 1 year after substantial completion.
   1. Include monthly and annual inspections in accordance with NFPA 10 and OSHA regulations.
   2. Submit reports of inspections to Owner.

PART 2 - PRODUCTS

2.01 FIRE EXTINGUISHERS

A. Manufacturers: Products of the following manufacturers, provided they comply with requirements of contract documents, will be among those considered acceptable:
   1. Fire extinguishers:
      a. Ansul Fire Protection/A Grinnell Company.
      b. General Fire Extinguisher Corporation.
      c. Walter Kidde, The Fire Extinguisher Co.

B. Fire Extinguishers:
   1. Rating: 2A:10B:C, 5 pounds capacity.
   2. Type: Multipurpose dry chemical (ammonium phosphate), stored pressure type. 'K' Type in kitchen
   3. Cabinet mounted unless noted otherwise.
   4. Aluminum cylinder.

2.02 CABINETS AND CABINET ACCESSORIES

A. Manufacturers: Products of the following manufacturers, provided they comply with requirements of contract documents, will be among those considered acceptable:
   1. Cabinets and accessories:
      a. J.L. Industries.
      b. Larsen's Manufacturing Company.
      c. Potter-Roemer Division/Smith Industries, Inc.

B. Cabinets:
   1. To house one extinguisher.
   2. Style: Fully recessed mounted, with trim concealed by door.
   3. Single flat door.
      a. Narrow vertical glazing panel.
         i. Acrylic sheet glazing.
         ii. Clear.
      b. Door material: Stainless Steel
      c. Lever handle, cam action latch
   4. Manufacturer's standard horizontal lettering identifying contents of cabinet.
      a. Letters silk screen painted, red.
   5. Box: Steel sheet, factory painted.
   6. Provide wall bracket for extinguisher, inside cabinet.

C. Hinges: Provide hinges for each door; concealed or continuous type; allow full 180 degree opening of door. Finish exposed hinges to match door.

D. Bracket Mounted: Provide bracket mounted extinguishers at apparatus bays.

PART 3 - EXECUTION

3.01 PREPARATION

A. Prepare openings for recessed cabinets.

3.02 INSTALLATION

A. Perform installation in accordance with the manufacturer's instructions except where more stringent requirements are shown or specified, and except where project conditions require extra precautions or provisions to ensure satisfactory performance of the work.

B. Locate extinguishers as directed by Architect.

C. Locate cabinets as directed by Architect.

D. Install cabinets at heights indicated.

E. Install extinguishers.

3.03 OWNER PERSONNEL INSTRUCTION

A. Instruct designated personnel of Owner in:
   1. Operation of extinguishers.
   2. Frequency of inspection and maintenance.
   3. Procedures for inspection and maintenance.
   4. Designation of inspection and maintenance entity.

END OF SECTION 10 44 00

SECTION 10 50 30 – TURNOUT GEAR LOCKERS WALL MOUNTED

PART 1 GENERAL

1.01.1 SUMMARY

A. Design, fabrication and installation of wall mounted turnout gear lockers as specified herein.

1.02 RELATED SECTIONS

A. Section 10: Metal Lockers

B. Sections of Division 16: electrical as applicable.

1.03 SUBMITTALS

A. Product Data: Submit manufacturer's product data and installation instructions.

B. Shop Drawings: Submit manufacturer's shop drawings for each individual run of lockers.

C. Samples: Submit manufacturer's standard color samples.

D. Owner's Manual: Provide maintenance manual at closeout.

E. Warranty: Submit manufacturer's standard warranty.

1.04 QUALITY ASSURANCE

A. Manufacturer shall have a minimum of five years experience in the direct manufacture of lockers.

B. Installer shall have experience in locker installation.

1.05 DELIVERY, STORAGE AND HANDLING

A. Delivery: Deliver materials to site in manufacturer's original, unopened containers with labels identifying product and manufacturer's name.

B. Storage: Store materials in a clean dry area.

C. Handling: Protect materials and finish during installation and handling to prevent damage.

PART 2 PRODUCTS

2.01 MANUFACTURER

A. Mid-Minnesota Wire (GearGrid Product Line), 670 SW 15th Street, Forest Lake, MN 55025. Toll-free 888-643-6694. Phone 651-464-4468. Fax 651-464-4780. Web site www.geargrid.com. Email sales@geargrid.com.

2.02 TURNOUT GEAR LOCKERS

A. Model: GEARGRID Wall Mounted Storage System

B. Locker Sizes:
1. Standard 20” Opening: Overall dimension-79” high x 21.25” wide x 20” deep. a. Clear Opening Width: 18.75”
2. Jumbo 24” Opening: Overall dimension-79” high x 25.25 wide x 20” deep.
3. Clear Opening Width: 22.75”

C. Construction: Units shall be welded at all applicable joints. Forming of metal shall be completed by standard cold-forming operations. Use of fasteners will only be required to allow for knockdown shipping, securing units to mounting surface and on applicable accessories.

D. Vertical Dividers:
1. Outer Frames: 1.25” O.D. x 16 gauge wall thickness ASTM A513 steel tubing.
2. Inner Grid: .25” diameter ASTM 510 cold drawn steel wire resistance welded to a 3” square pattern.

E. Back Panel:
1. Grid: .25” diameter ASTM 510 cold drawn steel wire resistance welded to a 3” square pattern.

F. Shelves: (1) Top, (1) Bottom. .25” diameter ASTM 510 cold drawn steel wire resistance welded and cold formed. Top shelf includes a 20 gauge steel bracket to accept a 2” x 16” name placard.

G. Apparel Hooks: (3) per opening. .25” diameter ASTM 510 cold drawn steel wire resistance welded and cold formed.

2.03 ACCESSORIES

A. Horizontal Hang Bar:
1. Tube: 1.25”O.D. x 16 gauge 304 stainless steel tubing.
2. Brackets: Attach to side mesh, powder coated.

B. Coat Drying Hanger:
1. .25” diameter 304 stainless steel wire cold formed and resistance welded.
2. Black vinyl coating on hook end.

C. Glove Drying Hanger:
1. .25” diameter 304 stainless steel wire cold formed and resistance welded.
2. Black vinyl coating on hook end.

D. Helmet Holder:
1. .25” diameter ASTM 510 cold drawn steel wire resistance welded.

E. Gear Box:
1. 6” x 6” x 12” long 6061 Aluminum with door one end.

2.04 FINISH

A. General: All system components excluding assembly and mounting hardware and stainless steel components are to receive the standard finish.

B. Standard Finish: Components to be cleaned using a phosphatized bath, clear water rinse and electro-statically coated with a durable TGIC powder coating.

C. Color: Red

Part 3 EXECUTION

3.01 EXAMINATION

A. Examine areas to receive lockers. Notify architect if areas are not acceptable.

B. Do not begin installation until unacceptable conditions have been corrected.

3.02 INSTALLATION

A. Install lockers in accordance with manufacturer's instructions.

B. Use manufacturer's hardware for assembly.

C. Anchor to mounting surface with proper hardware.

END OF SECTION 10 50 30

SECTION 10 73 16 - ALUMINUM CANOPIES

PART 1 - GENERAL

1.01 SUMMARY

A. Section Includes: Prefabricated aluminum canopies and walkway cover system.

B. Related Sections: Section 05 50 00 Metal Fabrications.

1.02 SYSTEM DESCRIPTION

A. Performance Requirements: Comply with requirements of governing Building Code. Design to withstand severe icing, hurricane winds, heavy hail and occasional foot traffic on the roof deck.

1.03 SUBMITTALS

A. Product Data: Submit written technical information and installation instructions which demonstrate that products comply with contract documents.

B. Shop Drawings: Submit shop drawings describing materials, fabrication, and installation, including layout plans, elevations, and large scale details. Include details of support, anchorage, and accessories. Upon request, submit structural design calculations, including foundations, bearing the seal of professional engineer licensed in Texas.

C. Samples: Submit manufacturer's full range of available finish material, color and texture samples for selection. For color verification, submit 6- by 6-inch samples of color selected.

D. Quality Control Submittals: Installer qualification statement; submit for information only.

E. Contract Closeout Submittals: Submit maintenance data.

F. Warranty: For information only, submit specimen copy of manufacturer's written warranty.

1.04 QUALITY ASSURANCE

A. Installer qualifications: A company with installation experience with units similar to those included in this section and authorized or licensed by manufacturer.

B. Preinstallation Conference: 2 weeks before start of installation, meet at the site with manufacturer's representative, Owner, and Architect to review installation, including adjacent construction, installation instructions and work of other trades directly adjacent to work of this Section.

1.05 DELIVERY, STORAGE, AND HANDLING

A. Follow manufacturer's directions for handling products and materials from factory to project site.

B. Packing and Shipping: Pack materials for delivery in manufacturer's standard coverings to protect products from damage during shipping and storage.

C. Storage and Protection: After delivery and before installation store panels on edge and above floor on blocking in a dry and ventilated area, protected from high humidity and temperature extremes.

1.06 COORDINATION

A. Provide coordination data to affected installers of related work. Include location template drawings for items supported by or anchored to substrate construction.

1.07 SEQUENCING AND SCHEDULING

A. Schedule installation to occur after substrate construction is complete to protect against damage from ongoing adjacent construction.

1.08 INSTALLATION WARRANTY

A. Submit a written warranty signed by the manufacturer and installer, guaranteeing to correct failures in product and workmanship which may occur during the warranty period, without reducing or otherwise limiting any other rights to correction which the Owner may have under the Contract Documents.

B. Warranty Period: 5 years, starting from date of substantial completion.

1.09 MAINTENANCE

A. Maintenance Instructions: For installed units, including instructions for cleaning exposed surfaces, repairing damaged components, and operating instructions.

B. Extra Materials:
1. Replacement surface finish material:
a. Supply 2 percent of the installed area of each type, color, and pattern of facing material.
b. Manufacture replacement materials at the same time as the materials to be installed.
c. Wrap replacement materials and label for identification to contents.

PART 2 - PRODUCTS

2.01 MANUFACTURERS

A. Products of the following manufacturers, provided they comply with requirements of the contract documents, will be among those considered acceptable:
1. Avadek Walkway Cover Systems & Canopies or approved equal.

2.02 MANUFACTURED UNITS

A. Walkway Cover System: Provide aluminum walkway cover system as indicated on drawings with integral gutter concealed in the beams and integral downspouts; connect to storm drainage system where indicated.

1. Construction: Alloy 6063 aluminum. Columns and beams shall be extruded members; weld and grind connections before finishing. Assemble to the greatest extent possible with concealed connections and fasteners. In no case shall pointed or threaded ends of fasteners be exposed.
2. Weight: As required to comply with specified performance requirements.
3. Finish: Color selected by Architect from manufacturer's full range.

B. Overhead Supported Canopy: Provide diagonal pipe brace supported aluminum canopy as indicated on drawings.
1. Construction: Alloy 6063 aluminum. Beams shall be extruded members; weld and grind connections before finishing. Assemble to the greatest extent possible with concealed connections and fasteners. In no case shall pointed or threaded ends of fasteners be exposed.
2. Weight: As required to comply with specified performance requirements.
3. Finish: Color selected by Architect from manufacturer's full range.

C. Cantilever Sunscreen Canopy: Provide cantilevered aluminum sunscreen canopy with shading louver blades as indicated on drawings.
1. Construction: Alloy 6063 aluminum. Beams shall be extruded members; weld and grind connections before finishing. Assemble to the greatest extent possible with concealed connections and fasteners. In no case shall pointed or threaded ends of fasteners be exposed.
2. Weight: As required to comply with specified performance requirements.
3. Finish: Color selected by Architect from manufacturer's full range.

PART 3 - EXECUTION

3.01 EXAMINATION

A. Review site at which work will be installed for installation conditions acceptable to manufacturer.

B. Correct unacceptable substrates and conditions before start of installation.

3.02 INSTALLATION

A. Complete substrate construction and adjacent finish surfaces, including painting, before start of installation.

B. Install products in accordance with manufacturer's written directions.

C. Install in configurations indicated on the drawings.

D. Correction of Defective Work: Replace broken, deformed, or otherwise damaged components.

E. Retrofit assemblies where indicated on drawings.

3.03 CLEANING

A. Clean installed work of this section and adjacent surfaces before final acceptance. Use cleaning materials and methods recommended by partition manufacturer.

B. Remove work debris from project site.

C. Protect against damage or dirt after installation and until date of substantial completion.

END OF SECTION 10 73 16

SECTION 10 75 00 - FLAGPOLES

PART 1 - GENERAL

1.01 SUMMARY

A. This Section includes aluminum flagpoles.

B. Submit Product Data for each type of flagpole required. Include installation instructions.

PART 2 - PRODUCTS

2.01 MANUFACTURERS

A. Manufacturers: Provide flagpoles by one of the following:
1. Baartol Co., Inc.
2. Concord Industries, Inc
3. Olympus Flag & Banner; EMC Div.
4. Approved equal.

2.02 MATERIALS

A. Pole Construction, General: Construct poles and ship to Project site in one piece, if possible. If more than one piece is necessary, provide snug-fitting, weathertight, hairline joints. Pole fittings shall accommodate the installation of (2) flags.

B. Aluminum Flagpoles: Fabricate from seamless, extruded tubing complying with ASTM B 241 (ASTM B 241M), alloy 6063, with a minimum wall thickness of 3/16 inch (4.8 mm). Heat treat after fabrication to comply with ASTM B 597, temper T6.
1. Provide 30 foot high cone-tapered aluminum flagpoles.
2. Finish: Class I, clear anodic finish (AA-M32C22A41).

C. Foundation Tube: Galvanized corrugated-steel foundation tube, 0.0635-inch (1.6-mm) minimum wall thickness with 3/16-inch (4.8-mm) steel bottom plate and support plate; 3/4-inch- (19-mm-) diameter, steel ground spike; and steel centering wedges all welded together and galvanized after assembly.

D. Fittings: Provide manufacturer's standard fittings to suit the size and type of flagpole indicated, including finial and halyard system with swivel snaps for attaching flag.
1. External Halyard: Ball-bearing, nonfouling, revolving truck assemblies of cast metal with continuous 5/16-inch- (8-mm-) diameter, braided polypropylene halyards and 9-inch (225-mm) cast-metal cleats with fasteners for dual flag installation. Finish exposed metal surfaces to match flagpole.

E. Flags: Fabricate from 2-ply 100% polyster
1. Provide (1) 5’x8’ United States of America flag in compliance with the General Services Administration Federal Specifications.
2. Provide (1) 5’x8’ State of Texas flag in compliance with the specifications adopted by the Texas House of Representatives.

PART 3 - EXECUTION

3.01 PREPARATION

A. Prepare in-ground flagpoles by painting below-grade portions with a heavy coat of bituminous paint.

B. Excavation: For foundation, excavate to neat clean lines in undisturbed soil. Remove loose soil and foreign matter from excavation and moisten earth before placing concrete.

C. Provide forms where required due to unstable soil conditions and for perimeter of flagpole base at grade. Secure forms, foundation tube, fiberglass sleeve, or anchor bolts in position, braced to prevent displacement during concreting.

D. Place concrete immediately after mixing. Compact concrete in place by using vibrators. Moist-cure exposed concrete for not less than 7 days or use a nonstaining curing compound.

E. Trowel exposed concrete surfaces to a smooth, dense finish, free of trowel marks, and uniform in texture and appearance. Provide positive slope for water runoff to base perimeter.

3.02 FLAGPOLE INSTALLATION

A. General: Install flagpole where shown and according to Shop Drawings and manufacturer's written instructions.

B. Foundation-Tube Installation: Install flagpole in foundation tube, seated on bottom plate between steel centering wedges. Plumb flagpole and install hardwood wedges to secure flagpole in place. Place and compact sand in foundation tube and remove hardwood wedges. Seal top of foundation tube with a 2-inch (50-mm) layer of elastomeric sealant and cover with flashing collar.

END OF SECTION 10 75 00

SECTION 10 99 00 - MISCELLANEOUS SPECIALTIES

PART 1 - GENERAL

1.01 SUMMARY

A. Section Includes: Flush-mount Corner guards.

B. Related Requirements: Sections 03 30 00 Concrete, 06 10 00 Rough Carpentry, 09 84 13 Acoustical Wall Panels and 09 91 00 Painting.

1.02 SUBMITTALS

A. Product Data: Submit written technical information and installation instructions which demonstrate that products comply with contract documents.

B. Shop Drawings: Submit shop drawings describing materials, fabrication, and installation. Include details of support, anchorage, and accessories.

C. Samples: Submit manufacturer's full range of available finish material, color and texture samples for selection.

D. Contract Closeout Submittals: Submit maintenance data.

1.03 QUALITY ASSURANCE

A. Installer qualifications: A company with installation experience with units similar to those included in this section and authorized or licensed by manufacturer.

1.04 DELIVERY, STORAGE, AND HANDLING

A. Follow manufacturer's directions for handling products and materials from factory to project site.

B. Packing and Shipping: Pack materials for delivery in manufacturer's standard coverings to protect products from damage during shipping and storage.

C. Storage and Protection: After delivery and before installation store panels on edge and above floor on blocking in a dry and ventilated area, protected from high humidity and temperature extremes.

1.05 COORDINATION

A. Provide coordination data to affected installers of related work. Include location template drawings for items supported by or anchored to substrate construction.

PART 2 - PRODUCTS

2.01 MATERIALS

A. Corner Guards, unless otherwise indicated:
   1. Typical at all drywall outside corners
   2. Extruded vinyl flush-mount corner guard 3”x3” 90 degree full height – reference drawings for ceiling heights
   3. Texture to have a pebblette texture

C. Accessories: Provide all mounting hardware, accessories and trim necessary for complete installation of miscellaneous specialties.

PART 3 - EXECUTION

3.01 EXAMINATION

A. Examine substrates on which work will be installed and other conditions affecting the work of this Section.

B. Correct unacceptable substrates and conditions before start of installation.

3.02 INSTALLATION

A. Complete substrate construction and adjacent finish surfaces, including painting, before start of installation.

B. Install products in accordance with manufacturer's written directions.

C. Install in configurations indicated on the drawings.

D. Corner Guards: Install at all interior gypsum drywall external corners.

E. Correction of Defective Work: Replace broken, chipped, deformed, or otherwise damaged components.

3.03 CLEANING

A. Clean installed work of this section and adjacent surfaces before final acceptance. Use cleaning materials and methods recommended by partition manufacturer.

B. Remove work debris from project site.

C. Protect against damage or dirt after installation and until date of substantial completion.

END OF SECTION 10 99 00

SECTION 11 23 00 – COMMERCIAL LAUNDRY EQUIPMENT

GENERAL

1.1 SECTION INCLUDES

A. Washer extractors.

1.2 RELATED SECTIONS

A. Section 03 30 00 - Cast-in-Place Concrete: Foundation bases for equipment.

B. Section 05 50 00 - Metal Fabrications: Steel equipment supports.

C. Division 15 Sections for supply and exhaust fans; exhaust ductwork; service roughing-ins; drain traps; valves, pipes, and fittings; and other materials required to complete commercial laundry equipment installation.

D. Division 16 Sections for wiring disconnect switches, and other electrical materials required to complete commercial laundry equipment installation.

1.3 REFERENCES

A. UL Certification: Provide electric equipment and components that are evaluated by UL for fire, and electric shock according to applicable safety standards and that are UL certified for compliance and labeled for intended use.

1.4 SUBMITTALS

A. Submit under provisions of Section 01 30 00.

B. Product Data: Manufacturer's data sheets on each product to be used, including:
   1. Preparation instructions and recommendations.
   2. Storage and handling requirements and recommendations.

C. Shop Drawings: Include plans, elevations, sections, roughing-in dimensions, fabrication details, utility service requirements, and attachments to other work.

D. Coordination Drawings: Indicate locations of laundry equipment and connections to utilities, and clearance requirements for equipment access and maintenance.

E. Operation and Maintenance Data: For laundry equipment to include in emergency, operation, and maintenance manuals. Include a schedule with the following:
   1. Designation indicated on Drawings.
   2. Manufacturer's name and model number.
   3. List of factory-authorized service agencies including their addresses and telephone numbers.

1.5 DELIVERY, STORAGE, AND HANDLING

A. Store equipment on site protected from weather, direct sunlight and temperature extremes. Do not remove packaging prior to storage.

B. Consult manufacturer if machines are to be stored for an extended period of time.

1.6 PROJECT CONDITIONS

A. Maintain environmental conditions (temperature, humidity, and ventilation) within limits recommended by manufacturer for optimum results. Do not install products under environmental conditions outside manufacturer's absolute limits.

1.7 WARRANTY

A. Washer Extractor Parts Only: Manufacturer's standard form in which manufacturer agrees to repair or replace any part of the equipment assembly that fails within specified warranty period.
1. Warranty Period: Three years from date of Substantial Completion.

B. Washer Extractor Parts Only, Mainframe, Cylinder Shaft Assembly, and Bearings Warranty: Manufacturer's standard form in which manufacturer agrees to repair or replace main frame, bearing, cylinder or cylinder shaft assembly that fails within specified warranty period.
1. Warranty Period: Five years from date of Substantial Completion.

PART 2 PRODUCTS

2.1 MANUFACTURERS

A. Acceptable Manufacturer: UniMac, which is located at: Shepard St. P. O. Box 990; Ripon, WI 54971-0990; Toll Free Tel: 800-587-5458; Fax: 920-748-1664; Email:request info (sales@alliancels.com); Web:www.unimac.com

B. Substitutions: Not permitted.

C. Requests for substitutions will be considered in accordance with provisions of Section 01 25 13.

2.2 MATERIALS

A. Washer Extractors - Stainless Steel: ASTM A 666, Type 304 with No. 4 finish (directional satin finish) on exposed surfaces.

2.3 UW SERIES HIGH PERFORMANCE WASHER EXTRACTOR MODELS AND COMPONENTS

A. Model No. UWN065T4V:
1. Dry Weight Capacity: 65 lb (30 kg).
2. Wash Cylinder Volume: 9.61 cu. ft. (272125 cu cm) minimum.
3. Number of Speeds: 9.
4. Number and Size of Water Inlet Connections: All 3/4 in (19 mm) NH male connectors.
5. Number and Size of Drain Outlets: 1 at 3 in (76 mm).
6. Drive Motor: 5 hp (3.7 kW).
7. G Force: 200/Medium.
8. Electrical Requirements: 208v-240v/60Hz/3phase.
9. Automatic chemical injection system with preprogrammed cycles with Citrosqueeze, pump, disinfectant.
10. Wall plaque.

PART 3 EXECUTION

3.1 EXAMINATION

A. Do not begin installation until substrates have been properly prepared.

B. If substrate preparation is the responsibility of another installer, notify Architect of unsatisfactory preparation before proceeding.

3.2 PREPARATION

A. Clean surfaces thoroughly prior to installation.

B. Prepare surfaces using the methods recommended by the manufacturer for achieving the best result for the substrate under the project conditions.

3.3 INSTALLATION

A. Install in accordance with manufacturer's instructions.

B. System Startup and Commissioning: Arrange for a local manufacturer's representative to inspect machines prior to startup and operation.

3.4 PROTECTION

A. Protect installed products until completion of project.

B. Touch-up, repair or replace damaged products before Substantial Completion.

END OF SECTION 11 23 00

SECTION 11 30 00 - RESIDENTIAL APPLIANCES

PART 1 – GENERAL

1.01 SECTION INCLUDES

A. Furnish and install the following owner provided appliances:
   1. Stove with Overhead Island Vent Hood
   2. Wall Oven with Microwave
   3. Dishwasher

1.02 SUBMITTALS

A. Product Data:
   1. Manufacturer's specifications and other data needed to prove compliance with specified requirements.
   2. Manufacturer's installation instructions.
   3. Manufacturer's operation and maintenance instructions.

B. Samples or color charts showing manufacturer's full range of colors.

PART 2 – PRODUCTS

2.01 APPLIANCE AND MANUFACTURERS

A. Natural Gas Range:
   1. Color: Stainless Steel
   2. Quantity: 1
   3. Approved Manufacturer: GE Appliances
   4. Model: JGP5036SLSS or equivalent

B. Range Hood:
   1. Color: Stainless Steel
   2. Quantity: 1
   3. Approved Manufacturer: GE Appliances
   4. Model: PV977NSS

C. Dishwasher:
   1. Color: Stainless Steel
   2. Quantity: 1
   3. Approved Manufacturer: GE Appliances
   4. Model: GLDT696JSS or equivalent

PART 3 – EXECUTION

3.01 EXAMINATION

A. Examine areas where appliances are to be installed to ensure proper opening sizes and that areas are ready to receive appliance installation.

B. Ensure that proper utilities are in place.

3.02 INSTALLATION

A. Install all appliances and equipment in accordance with manufacturer's printed instructions.

3.03 ADJUSTING AND CLEANING

A. Adjust appliances and equipment for proper operation.

B. Clean appliances and equipment of dirt, dust, fingerprints and markings detrimental to good appearance.

END OF SECTION 11 30 00

SECTION 12 21 00 - HORIZONTAL LOUVER BLINDS

PART 1 - GENERAL

1.01 SUMMARY

A. Section Includes: Horizontal louver blinds.

1.02 SUBMITTALS

A. Product Data: Manufacturer's specifications describing features, colors, options, accessories, for each type of unit. Include installation instructions and show how installation methods may differ for different openings and mounting substrates.

B. Shop Drawings:
1. Window blinds: Indicate special parts and installation conditions which are not shown or dimensioned in product data.
2. Show how this work adjoins other work.
3. Show layout of blind units, in elevation, including meeting edges and corners.

C. Schedule: Complete schedule with field measurements for each unit.

D. Samples:
1. For color selection: Color charts showing full range of colors and finishes available.
2. For color verification: Samples of actual components to be used; provide for all exposed materials.
3. For each window treatment type: One sample identical with actual product to be used except overall size may be smaller.

E. Certificates: For information only, submit manufacturer's written certification stating compliance with requirements for physical properties indicated.

F. Contract Closeout Submittals: Operation and maintenance data; include manufacturer's written operation and maintenance instructions.

G. Warranty: For information, include specimen of manufacturer's written warranty.

1.03 QUALITY ASSURANCE

A. Manufacturer qualifications: A company manufacturing all components of products specified in this section which have performed in a satisfactory manner for at least 3 years.

B. Installer qualifications: Company specializing in fabrication and installation of specified products, with at least 2 years of experience fabricating and installing similar products.

1.04 DELIVERY, STORAGE, AND HANDLING

A. Deliver materials in factory packages, marked with manufacturer and product name and location of installation.

B. Store materials in dry area maintained at building's operating temperature and humidity.

C. Follow manufacturer's instructions to prevent damage.

1.05 SEQUENCING AND SCHEDULING

A. Do not install window treatment until wet and dirty work is complete.

1.06 WARRANTY

A. Submit manufacturer's standard 2-year warranty, which shall not reduce or otherwise limit any other rights to correction which the Owner may have under the contract documents.

1.07 EXTRA MATERIALS

A. Furnish matching extra material packaged for long-term storage and labeled for easy identification.

B. Window Blinds: Provide 5 percent of the total quantity installed of each type and color.

PART 2 - PRODUCTS

2.01 HORIZONTAL LOUVER BLINDS

A. Horizontal Louver Blinds - General:
1. Comply with FS AA-V-00200.
2. Horizontal Blind Units: Complete with accessories, installation brackets, hardware, and fasteners; for each type, provide products of only one manufacturer.

B. Head Rail: Formed steel channel section, enclosing tilt and lift mechanisms; minimum 24 gage sheet; long edges returned or rolled; with reinforcing as required for rigidity.
1. Track size: 1 inch high by 1-1/2 inches wide.
2. Enclose all hardware required for blind operation in headrail.
3. Finish rails the same color as louvers.

C. Bottom Rail: Finish to match louvers.
1. Formed steel rail, designed not to twist or sag.
2. Curve top of rail to match louver radius.
3. Cap ends with plastic or metal caps; color to match rail.

D. Louvers: Aluminum, min. 0.008 inch thick, curved cross-section with smooth round corners.
1. Width: 1-inch (25 mm) nominal; size other parts to fit.
2. Design and space louvers to minimize light penetration when closed.

E. Ladders: Hold louvers at correct spacing and angle in all tilt positions; braided polyester cord ladder; verticals of 0.04 to 0.07 inch diameter; horizontals of not less than 2 threads braided into verticals; spaced to prevent long-term louver sag, but not over 24 inches apart and not over 7 inches from ends of louvers.

F. Tilt Mechanism: Hold louvers at any tilt angle despite normal building vibration; worm gear that disengages at limits of tilt with low friction tilter; provide drum at each ladder, linkage rod,

and grommets for ladder and operating cords. Tilt wand: Clear plastic, detachable; length as necessary to make operation convenient from floor level.

G. Lift Mechanism: Lift cords of nylon or polyester with pulls; cord lock that holds bottom rail securely at any level; cord separators.

H. Brackets: Design for easy removal and re-installation of blind.
1. Design to withstand dead weight and operating stresses.
2. Provide brackets at ends and at intervals recommended by manufacturer.
3. Include fasteners appropriate for substrate.

I. Accessories:
1. Valance: Two louvers in clear plastic frame; removable; match appearance of blind.
2. Hold-downs: Provide two brackets at lowest position of bottom rail, engaging hook or pin on bottom rail end caps.

J. Finish: All components factory-finished.
1. Steel: Baked-on enamel finish; prepared by galvanizing, and phosphatizing or priming.
2. Aluminum: Baked-on enamel finish; prepared by chemical conversion coating.
3. Concealed components: Corrosion-resistant finish.
4. Pattern/color: Selected by Architect, after contract award, from manufacturer's full range.
5. Exposed items other than louvers: Match color of rails.

K. Manufacturers: Products of the following manufacturers, provided they comply with requirements of the contract documents, will be among those considered acceptable:
1. Hunter Douglas, Inc./Window Covering Division.
2. Kirsch Company.
3. Levelor Corporation.
4. Springs Window Fashions (Bali/Graber).

2.02 FABRICATION

A. Fabricate to fit actual construction; take field measurements of openings before starting fabrication.

B. Use materials that are compatible, will not need to be lubricated, and which will not adversely affect adjacent materials.

C. Make blinds fill each opening completely, from jamb to jamb and from head to sill, with a single blind unit, unless multiple units are specifically indicated.

D. Horizontal Louver Blinds:
1. Space ladders in accordance with manufacturer's instructions.
2. Space louvers to positively overlap when closed.
3. Limit tilting to the following range:
   a. 60 degrees to 120 degrees.
4. Install tilt controls as directed by the Architect.
5. Install lift cords in locations directed by the Architect.

PART 3 - EXECUTION

3.01 EXAMINATION

A. Examine substrates at locations in which window blinds will be installed. Do not begin installation until conditions are correct.

3.02 INSTALLATION

A. Install blinds in accordance with manufacturer's installation instructions.

B. Set units in correct location, plumb, and level; allow clearance for window operating hardware.

C. Fasten securely to substrates.

D. Separate metal components from concrete and masonry using plastic tape or other suitable material.

E. Adjust each blind for proper operation; replace defective and damaged units.

F. Protect installed work.

END OF SECTION 12 21 00

SECTION 21 00 00 - FIRE PROTECTION

PART 1 - GENERAL

1.1 GENERAL REQUIREMENTS

A. The requirements of the General Conditions and Supplementary Conditions apply to all work herein.

B. The Basic Materials and Methods, Section 22 02 00, are included as a part of this Section as though written in full in this document.

1.2 SCOPE

The scope and work shall include providing treatment for MIC (Microbiologically Influenced Corrosion).

The Fire Protection Contractor shall provide the Owner with a periodic plan for the testing of the system's water.

1.3 WORK INCLUDED: Include the following Work in addition to items normally part of this Section: Stand Pipes, Fire Hose Valves, Siamese Connections, Test Header and Roof Manifolds.

1.4 REGULATORY CODES

A. WORK IN ACCORDANCE WITH:

1. NFPA 13 and 14.
2. Local municipal codes that have jurisdiction.

1.5 CERTIFICATE OF TESTING

A. Furnish Owner with test certificate certifying the system approved by:

1. Fire Marshall.
2. Insurance Services Officials.

PART 2 - PRODUCTS

2.1 STANDPIPE SYSTEM

A. VALVES:

1. GATE VALVES: Provide OS & Y gate valves with bronze seat and steel stem with iron body, flanged similar to Jenkins Figure "825A".
2. CHECK VALVES: Provide flanged, bronze mounted check valves similar to Jenkins Figure "629".
3. Valves shall be U.L. listed.

B. PIPING:

1. All piping associated with the standpipe system shall be schedule 40 black steel pipe with Victaulic couplings.
2. All fitting shall be cast iron rated for 300 psi and in accordance with NFPA 14.

C. PRODUCTS:

1. All Piping, fittings, equipment and valves shall be by a domestic manufacturer.

2.2 FIRE HOSE EQUIPMENT

A. APPROVED MANUFACTURERS: This specification is based on the first named, other listed below are approved.

1. Potter-Roemer, Inc.
2. Allen.
3. Elkhart.
4. Croker.

B. STANDPIPE HOSE VALVES: Potter-Roemer, Inc., 2-1/2" pressure regulating valve #4054 complete with brass cap, chain and visual indicator.

C. SIAMESE CONNECTIONS: shall be a Potter-Roemer #5761, polished chrome plated, equipped with chrome plated ball drip and with required lettering per N.F.P.A.

D. TEST HEADER: Potter-Roemer #5865 polished chrome plated on all exposed parts.

E. CONNECTION THREADS: Conforming to Fire Department requirements.

F. ROOF MANIFOLD: Potter-Roemer wall mounted or free standing rough chrome plated 3-way.

PART 3 - EXECUTION

3.1 DESIGN

A. The standpipe system shall conform to the requirement of NFPA.

B. The Contractor shall conform to the National Fire Protection Association's Fire Code No. 14, latest edition. It shall be the Contractor's responsibility to determine if any deficiency or deviations, such as an inadequate water supply, or any other item which would materially affect the acceptability of the system.

3.2 INSTALLATION

A. Install all items in accordance with applicable codes.

B. Run piping concealed above furred ceilings to minimize obstructions. Exact routing of piping shall be approved by Architect, and relocated as required at no additional cost to Owner.

3.3 REPLACEMENT

Upon receipt of written notice of failure of any part of the guaranteed equipment during the guaranteed period, the Contractor will replace the affected part or parts promptly at no additional cost.

3.4 TESTING

Upon completion of the installation, test the system and obtain approval of the local fire insurance rating organization having jurisdiction. Particular attention is called to the requirements of NFPA 14 pamphlet.

3.5 TRAINING

A. Owner's people shall be fully briefed in the normal start-up of the system, operation, normal and emergency shutdown, and maintenance of the system.

B. Routine maintenance, yearly maintenance, winterization, and spring start-up shall be fully discussed and documented.

C. Names of those instructed and dates, as well as a list of information handed over to the owner, shall be included in the final report.

END OF SECTION

SECTION 21 05 29 – HANGERS AND SUPPORTS FOR FIRE SUPPRESSION PIPING AND EQUIPMENT

PART 1 - GENERAL

1.1 WORK INCLUDED

A. Pipe, and equipment hangers, supports and associated anchors.

B. Sleeves and seals.

C. Flashing and sealing equipment and pipe stacks.

1.2 RELATED WORK

A. Section 21 00 00 – Fire Protection

B. Section 21 13 13 – Wet Pipe Sprinkler System.

C. Section 21 13 16 – Dry Pipe Sprinkler System.

1.3 REFERENCES

A. ANSI/ASME B31.1 - Power Piping.

B. NFPA 13 - Standard for the Installation of Sprinkler Systems.

C. NFPA 14 - Standard for the Installation of Standpipe and Hose Systems.

1.4 QUALITY ASSURANCE

A. Supports for Sprinkler Piping: In conformance with NFPA 13.

B. Supports for Standpipes: In conformance with NFPA 14.

1.5 SUBMITTALS

A. Submit shop drawings and product data under provisions of Division One.

B. Indicate hanger and support framing and attachment methods.

PART 2 - PRODUCTS

2.1 PIPE HANGERS AND SUPPORTS

A. Hangers for Pipe Sizes 1/2 to 1-1/2 Inch Malleable iron, adjustable swivel, split ring.

B. Hangers for Pipe Sizes 2 to 4 Inches Carbon steel, adjustable, clevis.

C. Hangers for Pipe Sizes 6 Inches and Over: Adjustable steel yoke, cast iron roll, double hanger.

D. Multiple or Trapeze Hangers: Steel channels with welded spacers and hanger rods; cast iron roll and stand for pipe sizes 6 inches and over.

E. Wall Support for Pipe Sizes to 3 Inches: Cast iron hook.

F. Wall Support for Pipe Sizes 4 Inches and Over: adjustable steel yoke and cast iron roll.

G. Vertical Support: Steel riser clamp.

H. Floor Support for Pipe Sizes to 4 Inches: Cast iron adjustable pipe saddle, locknut nipple, floor flange, and concrete pier or steel support.

I. Floor Support for Pipe Sizes 6 Inches and Over: Adjustable cast iron roll and stand, steel screws, and concrete pier or steel support.

J. Roof Pipe Supports and Hangers: Galvanized Steel Channel System as manufactured by Portable Pipe Hangers, Inc. or approved equal.

For pipes 2-1/2" and smaller – Type PP10 with roller
For pipes 3" through 8" – Type PS
For multiple pipes – Type PSE - Custom

K. For installation of protective shields refer to specification section 22 05 29 -3.03.

2.2 HANGER RODS

A. Galvanized Hanger Rods: Threaded both ends, threaded one end, or continuous threaded.

2.3 INSERTS

A. Inserts: Malleable iron case of galvanized steel shell and expander plug for threaded connection with lateral adjustment, top slot for reinforcing rods, lugs for attaching to forms; size inserts to suit threaded hanger rods.

2.4 FLASHING

A. Metal Flashing: 20 gage galvanized steel.

B. Lead Flashing: 4 lb./sq. ft. sheet lead for waterproofing; 1 lb./sq. ft. sheet lead for soundproofing.

C. Caps: Steel, 20 gage minimum; 16 gage at fire resistant elements.

D. Coordinate with roofing contractor/architect for type of flashing on metal roofs.

2.5 EQUIPMENT CURBS

A. Fabricate curbs of hot dipped galvanized steel.

2.6 SLEEVES

A. Sleeves for Pipes through Non-fire Rated Floors: Form with 18 gage galvanized steel, tack welded to form a uniform sleeve.

B. Sleeves for Pipes through Non-fire Rated Beams, Walls, Footings, and Potentially Wet Floors: Form with steel pipe, schedule 40.

C. Sleeves for Pipes through Fire Rated and Fire Resistive Floors and Walls, and Fireproofing: Prefabricated fire rated steel sleeves including seals, UL listed.

D. Fire Stopping Insulation: Glass fiber type, non-combustible, U.L. listed.

E. Caulk: Paintable 25-year acrylic sealant.

F. Pipe Alignment Guides: Factory fabricated, of cast semi-steel or heavy fabricated steel, consisting of bolted, two-section outer cylinder and base with two-section guiding spider that bolts tightly to pipe. Length of guides shall be as recommended by manufacturer to allow indicated travel.

2.7 FABRICATION

A. Size sleeves large enough to allow for movement due to expansion and contraction. Provide for continuous insulation wrapping.

B. Design hangers without disengagement of supported pipe.

C. Design roof supports without roof penetrations, flashing or damage to the roofing material.

2.8 FINISH

A. Prime coat exposed steel hangers and supports. Hangers and supports located in crawl spaces, pipe shafts, and suspended ceiling spaces are not considered exposed.

PART 3 - EXECUTION

3.1 INSERTS

A. Provide inserts for suspending hangers from reinforced concrete slabs and sides of reinforced concrete beams. Coordinate with structural engineer for placement of inserts.

B. Provide hooked rod to concrete reinforcement section for inserts carrying pipe over 4 inches.

C. Where concrete slabs form finished ceiling, provide inserts to be flush with slab surface.

D. Where inserts are omitted, drill through concrete slab from below and provide thru-bolt with recessed square steel plate and nut recessed into and grouted flush with slab. Verify with structural engineer prior to start of work.

3.2 PIPE HANGERS AND SUPPORTS

A. Support horizontal piping as follows:

PIPE SIZE	MAX. HANGER SPACING	HANGER DIAMETER
(Steel Pipe)		
1/2 to 1-1/4 inch	7’-0”	3/8"
1-1/2 to 3 inch	10'-0"	3/8"
4 to 6 inch	10'-0"	1/2"
8 to 10 inch	10'-0"	5/8"
12 to 14 inch	10'-0"	3/4"
15 inch and over	10'-0"	7/8"
(Copper Pipe)		
1/2 to 1-1/4 inch	5'-0"	3/8"

1-1/2 to 2-1/2 inch	8'-0"	3/8"
3 to 4 inch	10'-0"	3/8"
6 to 8 inch	10'-0"	1/2"
(PVC Pipe)		
1-1/2 to 4 inch	4'-0"	3/8"
6 to 8 inch	4'-0"	1/2"
10 and over	4'-0"	5/8"

B. Install hangers to provide minimum 1/2 inch space between finished covering and adjacent work.

C. Place a hanger within 12 inches of each horizontal elbow and at the vertical horizontal transition.

D. Use hangers with 1-1/2 inch minimum vertical adjustment.

E. Support horizontal cast iron pipe adjacent to each hub, with 5 feet maximum spacing between hangers.

F. Support vertical piping at every floor. Support vertical cast iron pipe at each floor at hub.

G. Where several pipes can be installed in parallel and at same elevation, provide multiple or trapeze hangers.

H. Support riser piping independently of connected horizontal piping.

I. Install hangers with nut at base and above hanger; tighten upper nut to hanger after final installation adjustments.

J. Portable pipe hanger systems shall be installed per manufactures instructions.

3.3 Insulated Piping: Comply with the following installation requirements.

A. Clamps: Attach galvanized clamps, including spacers (if any), to piping with clamps projecting through insulation; do not exceed pipe stresses allowed by ASME B31.9.

B. Saddles: Install galvanized protection saddles MSS Type 39 where insulation without vapor barrier is indicated. Fill interior voids with segments of insulation that match adjoining pipe insulation.

C. Shields: Install protective shields MSS Type 40 on cold and chilled water piping that has vapor barrier. Shields shall span an arc of 180 degrees and shall have dimensions in inches not less than the following:

NPS	LENGTH	THICKNESS
1/4 THROUGH 3-1/2	12	0.048
4	12	0.060
5 & 6	18	0.060
8 THROUGH 14	24	0.075
16 THROUGH 24	24	0.105

D. Piping 2” and larger provide galvanized sheet metal shields with calcium silicate at hangers/supports.

E. Insert material shall be at least as long as the protective shield.

F. Thermal Hanger Shields: Install where indicated, with insulation of same thickness as piping.

3.4 EQUIPMENT BASES AND SUPPORTS

A. Provide equipment bases of concrete.

B. Provide templates, anchor bolts, and accessories for mounting and anchoring equipment.

C. Construct support of steel members. Brace and fasten with flanges bolted to structure.

D. Provide rigid anchors for pipes after vibration isolation components are installed.

3.5 FLASHING

A. Provide flexible flashing and metal counter flashing where piping and ductwork penetrate weather or waterproofed walls, floors, and roofs.

B. Flash vent and soil pipes projecting 8 inches minimum above finished roof surface with lead worked one inch minimum into hub, 8 inches minimum clear on sides with 24 x 24 inches sheet size. For pipes through outside walls, turn flanges back into wall and caulk, metal counter flash and seal.

C. Flash floor drains in floors with topping over finished areas with lead, 10 inches clear on sides with minimum 36 x 36 inch sheet size. Fasten flashing to drain clamp device.

D. Seal floor shower mop sink and all other drains watertight to adjacent materials.

E. Provide curbs for mechanical roof installations 8 inches minimum high above roofing surface. Contact architect for all flashing details and roof construction. Seal penetrations watertight.

3.6 SLEEVES

A. Set sleeves in position in formwork. Provide reinforcing around sleeves.

B. Extend sleeves through floors minimum one inch above finished floor level. Caulk sleeves full depth with fire rated thermfiber and 3M caulking and provide floor plate.

C. Where piping penetrates floor, ceiling, or wall, close off space between pipe or duct and adjacent work with U.L. listed fire stopping insulation and caulk seal air tight. Provide close fitting metal collar or escutcheon covers at both sides of penetration.

D. Fire protection sleeves may be flush with floor of stairways.

END OF SECTION

SECTION 21 13 13 - WET PIPE SPRINKLER SYSTEM

PART 1 - GENERAL

1.1 GENERAL REQUIREMENTS

A. The requirements of the General Conditions and Supplementary Conditions apply to all work herein.

B. The Basic Materials and Methods, Section 22 02 00, are included as a part of this Section as though written in full in this document.

C. Refer to Section 21 00 00 for integral requirements.

1.2 SCOPE

A. Scope of the work shall include the furnishing and complete installation of the equipment covered by this Section, with all auxiliaries, ready for owner's use.

B. The scope and work shall include providing treatment for MIC (Microbiologically Influenced Corrosion).

C. The Fire Protection Contractor shall provide the Owner with a periodic plan for the testing of the system’s water.

1.3 REGULATORY CODES

A. Work in accordance with:

1. NFPA.
2. Local municipal codes that have jurisdiction.

B. Products in accordance with:

1. United Laboratories (UL) listed.
2. Factory Mutual (FM) approved.

1.4 CERTIFICATE OF TESTING

A. Furnish Owner with test certificate certifying the system approved by:

1. City Fire Marshall.
2. Insurance Services Officials

PART 2 - PRODUCTS

2.1 FIRE SPRINKLER SYSTEM

A. GENERAL:

1. Work Included:
   a. Design, coordination and installation of inside and outside piping, including sprinkler heads, valves, hangers and supports sleeves.
   b. The sprinkler system is a wet type and is designed to provide coverage for entire building. The Contract Drawings indicate the extent and general arrangement, and the various occupancy classifications.

c. Sprinkler heads are not shown.
d. The plans provide a preliminary layout with riser assembly location, flow switch locations, valve locations, and fire department Siamese connections. These are a guide for subsequent preparation of the Contractor's detailed working drawings.
e. Interface system with building fire and smoke alarm system.

2. Quality Assurance: Equipment and installation to meet requirements of NFPA Number 13, latest edition and local authority having jurisdiction. All components of the completed system shall be UL listed for the intended service.

2.2 SUBMITTALS:

A. Submit shop drawings in accordance with Section 22 02 00.

B. Submit preliminary layout showing only head locations for review by Architect/Engineer. Furnish additional heads which may be required for coordinated ceiling pattern without added cost, even though number of heads may exceed minimum code requirements.

C. Submit shop drawings of entire sprinkler system including hydraulic calculations to Architect/Engineer.

D. Provide Architect with six complete sets of final approved shop drawings before starting the installation. Include details of the sprinkler system showing sections, light fixtures, air conditioning, ducts, and a plan giving fire department connections, location of all exposed structures within twenty feet of this structure, and other equipment to be used. Drawings shall bear the stamp of review of the local fire insurance rating organization having jurisdiction.

E. Service Utility Diagram: Furnish Architect with an accurately marked print showing location of underground pipes and valves as installed upon completion of underground Work.

F. Provide a printed sheet giving brief instructions relative to all necessary aspects of sprinkler controls and emergency procedures next to sprinkler riser mains. Instruction sheet to be protected by glass or a transparent plastic cover.

G. Materials:

1. Piping:
a. All piping above grade shall be:
- schedule 10 black steel pipe with a rolled groove ends, joined with mechanical coupling and cut groove cast iron fittings for pipe 2-1/2” and greater.
- schedule 40 black steel threaded pipe and fittings for pipe 2” and smaller.

b. Acceptable manufacturer:
- American Tube
- Wheatland Tube
- Gem Sprinkler

c. Acceptable mechanical coupling manufacturer:
- Victaulic
- Grinnell
- Reliable
- Gruvlok

d. In all locations subject to corrosive conditions, ensure to provide a suitable epoxy (spray) coating to all exposed surfaces of pipe and

fittings. Such locations shall include, but not necessarily be limited to, the following: natatoriums, pool equipment rooms, chemical and metal process areas, and animal pens. All job-applied protective coatings shall be provided as approved and only after verification that the proper piping has been installed, per the markings along the length of the pipe.

2. Sprinkler Heads:
   a. Suspended Ceiling Type: Standard Concealed pendant type with white cover plate.
   b. Exposed Area Type: Standard upright type with brass finish.
   c. Sidewall Type: Chrome plated finish with matching escutcheon.
   d. Temperature rating on fusible links to suit specific hazard area with minimum margin or safety 50 degrees F.
   e. Sprinkler heads of the “O”-ring seal type are not acceptable.
   f. In all locations subject to corrosive conditions provide heads entirely constructed of stainless steel or heads with polyester coated finish and dipped in wax. Such locations shall include, but not necessarily be limited to, the following: natatoriums, pool equipment rooms, chemical and metal process areas, and animal pens.
   g. In all locations subject to occupant abuse or vandalism provide institutional type sprinkler heads with tamper-resistant construction and suitable “break-away” weight test documentation from the manufacturer. Such locations shall include, but not necessarily be limited to, the following: patient areas of institutional mental health occupancies, prisoner areas (cells, etc.) of correctional facilities – jails, prisons, juvenile detention facilities.
   h. Flexible type sprinkler head connection systems are not acceptable.
   i. Acceptable manufacturer:
      - Reliable
      - Grinnell
      - Viking
3. Sprinkler Alarm Valve:
   a. Provide approved automatic sprinkler valve with one or two pole (as required) flow detectors, pressure switch, outside water motor gong, outside electric gongs, and inside electric gong and circuit breaker.
   b. Acceptable manufacturer:
      - Reliable
      - Grinnell
      - Viking
4. Valves:
   a. 2” and smaller: bronze, rising stem, inside screw, solid wedge, U.L. listed valve.
   b. 2-1/2” and larger: iron body, bronze trim, rising stem, OS&Y, solid wedge, U.L. listed valve.
   c. Check valve: cast iron flanged body, bronze fitted, non-slam type.
   d. Install valves with stems upright or horizontal, not inverted.
   e. Acceptable manufacturer:
      - Nibco
      - Grinnell
      - Stockham
      - Victaulic
5. Fire Department Connection: Refer to Section 21 00 00.
6. Insulation:
   a. All piping and valves exposed to the weather or within building and exposed to the weather shall be insulated with Phenolic foam with ASJ and all joints sealed. Insulation density shall not be less than 1.5 pounds per cubic foot, and conductivity (K) not higher than 0.25 and 75°F mean

temperature difference, with factory applied all weather vapor barrier jacket.

b. All insulated pipe and valves subject to damage shall be protected with an aluminum jacket with sealed joints.

c. Refer to Section 22 07 19 for detailed specification.

7. Products:

a. All piping, fitting, equipment, sprinkler heads, and valves shall be by a domestic manufacturer.

PART 3 - EXECUTION

3.1 All equipment shall be installed in accordance with the manufacturer's recommendations and printed installation instructions.

3.2 All items required for a complete and proper installation are not necessarily indicated on the plans or in the specifications. Provide all items as required by NFPA and installed as per manufacturer's recommendations.

3.3 DESIGN

A. Design spacing of sprinkler heads and selection sizes shall conform to the requirement of NFPA 13 for the indicated occupancy.

B. Uniform discharge density design shall be based on hydraulic calculations utilizing the method outlined in NFPA 13. Density of discharge from sprinkler heads shall conform to NFPA 13.

C. Friction losses in pipe will be based on a value of "C" =120 in the Hazen - Williams formula.

D. Design and install the system so that no part will interfere with doors, windows, heating, plumbing, or electrical equipment. Do not locate sprinkler heads within 6 inches of lighting fixtures, HVAC diffusers and other obstructions. Sprinkler piping cannot penetrate ductwork or lighting fixtures.

E. The Contractor shall conform to the National Fire Protection Association's Fire Code No. 13, latest edition. Special attention shall be given to Article 1-9, working plans. It shall be the Registered Fire Protection Engineer's responsibility to determine if any deficiency or deviations, such as an inadequate water supply, or any other item which would materially affect the acceptability of the system.

3.4 INSTALLATION

A. Install all items in accordance with applicable codes.

B. Install piping so that mains and branches are not located directly underneath HVAC equipment or other items needing access.

C. All sprinkler heads shall be located as near the center of ceiling tiles as is practical (±1/2"). Location shall present a uniform pattern with all heads aligned when completely installed.

D. Run piping concealed above furred ceilings and in joists to minimize obstructions. Expose only heads. Exact routing of piping shall be approved by Architect or relocated as required at no additional cost to Owner.

E. Wire guards on all pendant or upright sprinklers heads in mechanical rooms, gymnasiums, athletic areas, wood and metal shops.

F. Protect sprinkler heads against mechanical injury with standard guards.

G. Locate outside alarms on wall of building adjacent to siamese fire department connection.

H. Provide on wall near sprinkler valve, cabinet containing four extra sprinkler heads of each type and wrench suitable for each head type.

I. Provide 1 inch diameter nipple and 1 inch x 1/2 inch reducing fitting for each upright head.

J. Painting shall be as follows:

1. Exposed sprinkler riser, alarm valve and all related piping shall be painted red.
2. Exposed sprinkler piping in finished areas shall be painted as directed by Architect.

3.5 REPLACEMENT

Upon receipt of written notice of failure of any part of the guaranteed equipment during the guaranteed period, the Contractor will replace the affected part or parts promptly at no additional cost.

3.6 TESTING

A. Prior to testing, the entire sprinkler system shall be thoroughly flushed clean.

B. Upon completion of the installation and flushing, test the system and obtain approval of the local fire insurance rating organization having jurisdiction. Particular attention is called to the requirements of NFPA 13 pamphlet.

3.7 TRAINING

A. Owner's people shall be fully briefed in the normal start-up of the system, operation, normal and emergency shutdown, and maintenance of the system.

B. Routine maintenance, yearly maintenance, winterization, and spring start-up shall be fully discussed and documented.

C. Names of those instructed and dates, as well as a list of information handed over to the owner, shall be included in the final report.

END OF SECTION

SECTION 21 30 00 - FIRE PUMPS

PART 1 - GENERAL

1.1 SECTION INCLUDES

A. Fire pump package.

B. Fire pump electric motor.

C. Electric jockey pump.

D. Controllers.

1.2 RELATED SECTIONS

A. Section 21 00 00 – Fire Protection

B. Section 21 13 13 – Wet Pipe Sprinkler System.

C. Section 22 10 00 - Plumbing Piping and Pumps.

D. Section 23 05 13 – Common Motor Requirements for Plumbing Equipment.

E. Section 22 05 29 – Hangers and Support for Plumbing Piping and Equipment.

F. Section 22 07 16 – Plumbing Equipment Insulation.

G. Section 22 07 19 – Plumbing Piping Insulation.

H. Section 26 05 19 – Wire, Cable, and Related Materials.

1.3 REFERENCES

A. Factory Mutual System (FM) - Approval Guide.

B. NEMA MG-1 - Motors and Generators.

C. NEMA 250 - Enclosures for Electrical Equipment (1000 Volt Maximum).

D. NFPA 20 - Installation of Centrifugal Fire Pumps.

E. UL - Fire Protection Equipment Directory.

F. UL 448 - Pumps for Fire Protection Service.

G. UL 778 - Motor Operated Water Pumps.

H. UL 1478 - Fire Pump Relief Valves.

1.4 SYSTEM DESCRIPTION

A. Electric motor driven horizontal fire pump with jockey pump and electric controllers.

B. The fire pumps shall be designed to deliver the capacities listed with suction condition as scheduled and a flow of 150% of rated capacity at a pressure not less than 65% of rated

head. The shut off head shall not exceed 120% of the rated head.

1.5 SUBMITTALS

A. Submit under provisions of Division One.

B. Shop Drawings: Indicate layout, general assembly, components, dimensions, weights, clearances, and methods of assembly.

C. Product Data: Provide manufacturers literature including general assembly, pump curves showing performance characteristics with pump and system, operating point indicated, NPSH curve, controls, wiring diagrams, and service connections.

D. Manufacturer's Installation Instruction: Indicate support details, connection requirements, and include start-up instructions for fire pump system.

E. Manufacturer's Certificate: Certify that fire pumps meet or exceed specified requirements at specified operating conditions.

F. Field Reports: Indicate summary of hydrostatic test and field acceptance tests performed in accordance with NFPA 20.

1.6 OPERATION AND MAINTENANCE DATA

A. Submit under provisions of Division One.

B. Operation Data: Include manufacturers' instructions, start-up data, and trouble-shooting check lists for pumps, drivers, and controllers.

C. Maintenance Data: Include manufacturers' literature, cleaning procedures, replacement parts lists, and repair data for pumps, drivers and controllers.

1.7 QUALITY ASSURANCE

A. Perform work in accordance with NFPA 20.

B. Equipment and Components: Bear UL FM label or marking.

1.8 QUALIFICATIONS

A. Manufacturer: Company specializing in manufacturing the products specified in this Section with minimum five years documented experience.

B. Installer: Company specializing in performing the work of this Section with minimum five years documented experience.

1.9 REGULATORY REQUIREMENTS

A. Conform to NFPA 20 for installation and testing of fire pumps, drivers, and controllers.

B. Provide certificate of compliance from authority have jurisdiction indicating approval of field acceptance tests.

C. All materials and equipment used in the installation shall be as approved by the underwriters Laboratories, Inc. List of inspected Fire Protection Equipment and Materials, and the Factory Mutual Testing laboratories' List of Approved Equipment. Fire protection

devices and devices involved in fire hazards shall be the latest of the manufacturer.

1.10 DELIVERY, STORAGE, AND HANDLING

A. Delivery, store, protect and handle products to site under provisions of Division One.

B. Accept fire pumps and components on site in factory packing. Inspect for damage. Comply with manufacturers rigging and installation instructions.

C. Protect fire pumps and components from physical damage including effects of weather, water, and construction debris.

D. Provide temporary inlet and outlet caps, and maintain in place until installation.

1.11 MAINTENANCE SERVICE

A. Furnish service and maintenance of fire pump, driver, and controller for one year from date of Substantial Completion.

1.12 EXTRA MATERIALS

A. Furnish under provisions of Division One.

B. Provide one extra set of gaskets, screens, and seals for each pump type and model supplied.

PART 2 - PRODUCTS

2.1 MANUFACTURERS

A. Aurora Product

.

B. Peerless Product.

C. Fairbanks-Morse Product.

D. Substitutions: Under provisions of Division One.

2.2 HORIZONTAL BASE MOUNTED PUMPS

A. Type: UL 448 and UL 778, horizontal shaft, single stage, double suction, direct connected, horizontally split casing, for 250 psig maximum working pressure.

B. Casing: Cast iron, with suction and discharge gage ports, renewable bronze casing wearing rings, seal flush connection, drain plug, flanged suction and discharge.

C. Impeller: Bronze double suction fully enclosed, balanced and keyed to shaft.

D. Bearings: Grease lubricated ball bearings, replaceable without opening casing.

E. Shaft: Alloy steel with replaceable bronze shaft sleeve.

F. Seal: Packing gland with minimum four rings graphite impregnated packing and bronze lantern rings, 230 degrees F (110 degrees C) maximum continuous operating temperature.

G. Drive: Flexible coupling with coupling guard.

H. Baseplate: Cast iron or fabricated steel with integral drain rim.

2.3 FIRE PUMP ACCESSORIES

A. Eccentric suction reducer and OS&Y gate or butterfly valve on suction side of pump.

B. Concentric increaser and check valve in pump discharge and OS&Y gate or butterfly valve on system side of check valve.

C. Fire pump/surge tank bypass fitted with OS&Y gate or butterfly valves and RPZ double check valve backflow preventer.

D. Main relief valve, UL 1478, and enclosed type waste cone.

E. Suction pressure gage, 4 1/2 inch diameter dial with snubber, valve cock and lever handle.

F. Discharge pressure gage mounted on board attached to pump, with snubber, valve cock and lever handle.

G. Casing 3/4 inch relief valve.

H. Float operated 3/4 inch automatic air release valve.

I. Hose valve manifold with 2 1/2 inch hose gate valves with caps and chains.

2.4 ELECTRIC MOTOR DRIVE

A. Motor: Squirrel cage induction type; in open drip proof NEMA MG-1 enclosure, 1750 rpm. Refer to Section 26 29 13.

B. Controller: Limited service type with soft start reduced voltage starter in a ANSI/NEMA 4 enclosure. Provide the following:

1. Disconnect Switch: Externally operable, quick break type.
2. Circuit Breaker: Trips in each phase calibrated at least to 300% of the motor full-load current, 100,000 amperes interrupting capacity.
3. Motor Starter: Energized automatically through pressure switch or manually by externally operable handle.
4. Pressure Switch: Set to cut in at pressure required to maintain 100 psig at top of building riser.
5. Automatic Transfer Switch.
6. Running Period Timer: Keeps motor in operation when started automatically, for a minimum of seven minutes.
7. Pilot Lamp: Indicates circuit breaker closed and power available.
8. Ammeter test link and voltmeter test studs.
9. Alarm Relay: Energizes alarm to indicate circuit breaker open or power failure.
10. Remote start switch relay.
11. Manual Selector Station: On enclosure marked "Automatic" and "Non-Automatic."
12. Controller shall be rated for service entrance and shall include a neutral bar.
13. Acceptable manufacturers of fire pump/jockey pump controllers:
    a. Firetrol
    b. Metron
    c. Master

2.5 PRESSURE BOOSTER (JOCKEY) PUMP

A. Electrically operated, horizontal close-coupled type with standard open drip-proof horizontal motor.

B. Each pump shall be multi-stage bronze fitted turbine type with bronze impeller, stainless steel shaft, and grease-lubricated ball bearings, similar and approved equal to Aurora Series 110.

C. The fire system jockey pump shall be furnished with a factory-mounted bypass relief valve complete with piping. Set relief pressure above the design total dynamic head as required to prevent motor overload and damage to the system.

D. Control by automatic jockey pump controller with full voltage starter and minimum run timer to start pump on pressure drop in system and stay in operation for minimum period of time. Fire pump shall start automatically on further pressure drop or on jockey pump failure.

E. The jockey pump control panel enclosure shall be NEMA Type 1 wall-mounted, factory assembled, wired, and tested and shall be finished with a baked enamel coating. Panel shall include at least the following equipment:

1. One non-fused disconnect switch mounted on panel door.
2. One combination magnetic motor controller.
3. One hand-off-automatic selector switch mounted on panel door.
4. 120 volt control power transformer and fused disconnect switch as required to operate switches and controls in the panel.

PART 3 - EXECUTION

3.1 INSTALLATION

A. Install in accordance with manufacturer's instructions.

B. Install diesel engine drive to NFPA 37.

C. Provide access space around pumps for service. Provide no less than minimum as recommended by manufacturer.

D. Decrease from line size with long radius reducing elbows or reducers. Support piping adjacent to pump such that no weight is carried on pump casings. For base mounted pumps, provide supports under elbows on pump suction and discharge. Refer to Section 21 00 00.

E. Provide drains for bases and seals, piped to and discharging into floor drains.

F. Mount unit on vibration isolators. Refer to Section 22 05 29.

G. Provide piping for fuel supply and return connected to motor. Provide piping to and from exhaust silencer with thimble at wall or roof penetrations. Refer to Section 22 10 00.

H. Insulate piping associated with pump, pump casing and exhaust silencer. Refer to Section 22 07 19 and Section 22 07 16.

I. Provide for connection to electrical service. Refer to Section 26 05 19.

J. Lubricate pumps before start-up.

K. Check, align, and certify base mounted pumps by qualified millwright prior to start-up.

3.2 FIELD QUALITY CONTROL

A. Perform field inspection and testing under provisions of Division One.

B. Perform hydrostatic flow test on entire system in accordance with NFPA 20.

C. Require test to be witnessed by Fire Marshal, Owner's insurance underwriter and Architect/Engineer.

END OF SECTION

SECTION 21 41 00 – STORAGE TANKS FOR FIRE-SUPPRESSION WATER

PART 1 - GENERAL

1.1 GENERAL REQUIREMENTS

A. The requirements of the General Conditions and Supplementary Conditions apply to all work herein.

B. The Basic Materials and Methods, Section 22 02 00, are included as a part of this Section as though written in full in this document.

1.2 SCOPE

A. Scope of the work shall include the furnishing and complete installation of the equipment covered by this Section, with all auxiliaries, ready for owner's use.

B. The scope and work shall include, but not necessarily be limited to, the following: water tank for private fire protection, fill valves, level alarm systems, and associated piping and wiring.

1.3 RELATED WORK

A. Section 21 00 00 – Fire Protection.

B. Section 21 02 01 – Coordination Drawings.

C. Section 21 05 29 – Hangers and Supports for Fire Suppression Piping and Equipment.

D. Section 21 13 13 – Wet Pipe Sprinkler System.

E. Section 21 30 00 – Fire Pumps.

F. Section 22 05 48 – Vibration and Seismic Controls for Plumbing Piping and Equipment.

G. Section 26 05 19 – Wire, Cable and Related Materials.

1.4 REFERENCES

A. ASTM A36 – Standard Specification for Carbon Structural Steel

B. ASME Section IX – Welding, Brazing, and Fusing Qualifications

C. NFPA 13 – Standard for the Installation of Sprinkler Systems

D. NFPA 14 – Standard for the Installation of Standpipe and Hose Systems

E. NFPA 20 – Standard for the Installation of Stationary Pumps for Fire Protection

F. NFPA 22 – Standard for Water Tanks for Private Fire Protection

G. NFPA 70 - National Electrical Code

H. NSF/ANSI 61 – Drinking Water System Components – Health Effects

1.5 QUALITY ASSURANCE

A. Manufacturer: For each product specified, provide components by the same manufacturer throughout.

B. Perform work in accordance with NFPA 22 and authorities having jurisdiction.

C. Welding Materials and Procedures: Conform to ASME Code and applicable state labor regulations.

D. Welders Certification: In accordance with ASME Section IX.

E. Ensure products and installation of specified products are in conformance with recommendations and requirements of the following organizations:

1. National Fire Protection Association (NFPA).
2. National Sanitation Foundation (NSF).
3. American Society of Mechanical Engineers (ASME).
4. National Electrical Manufacturers' Association (NEMA).
5. Underwriters Laboratories (UL).

1.6 QUALIFICATIONS

A. Fabricator/Installer: Company specializing in performing the work of this section with a minimum of 5 years of documented experience building tanks of 3,500 gallons or larger. A list of installations of such tanks shall be furnished as required by the Engineer.

1.7 SUBMITTALS

A. Submit under provisions of Division One.

B. Shop Drawings:

1. Include tank interior and exterior dimensions, actual water storage capacity in gallons, sizes of and dimensioned locations of all tappings, drains, and openings, and required maintenance/access clearances on all sides and above.
2. Include interior and exterior finishes and lining methods, anchors, attachments, lifting points, weight of complete (empty) tank.

C. Product Data:

1. Shop drawings shall be submitted for review prior to fabrication of any of the water supply tanks and/or accessories.
2. Dimensioned tank fabrication plans, including construction details, all penetrations and accessories, and specification on tank fabrication, penetration and finishing.
3. Cut sheets for tank fill valves, emergency block valves, level controls, accessories, and alarms showing all features.
4. Material and coating specifications.
5. Drawing of alarm/control panel, with information including front panel elevation, nameplate text, component list and wiring diagram.
6. Drawing for the tank(s) shall be certified by a Structural Engineer, registered in the State of Texas and shall bear his seal and signature.

D. Manufacturer's Installation Instructions: Indicate assembly and support requirements.

1.8 OPERATION AND MAINTENANCE DATA

A. Submit under provisions of Division One.

B. Include operation, maintenance, and inspection data, replacement part numbers and availability, and service depot location and telephone number.

C. For tanks specified with the McCrory-500 epoxy interior lining system, the required Certificate of Compliance from the manufacturer/applicator MUST be provided. Any such Operating and Maintenance Manual submission lacking this Certificate of Compliance will be deemed incomplete, unacceptable, and will be rejected.

1.9 DELIVERY, STORAGE, AND HANDLING

A. Deliver to, store, protect and handle products on site under provisions of Division One.

B. Provide temporary inlet and outlet caps. Maintain caps in place until installation.

1.10 WARRANTY

A. Provide five year warranty under provisions of Division One.

PART 2 - PRODUCTS

2.1 FABRICATED STEEL WATER TANK FOR PRIVATE FIRE PROTECTION

A. Each tank shall be of the size, capacity, and configuration as shown on the Drawings, constructed in accordance with American Welding Society specifications, with structural design in accordance with AISC latest issue, and shall comply with NFPA 22 prevailing edition and be in accordance with the local Building Code as amended by the City. All welders shall be certified under Section IX of ASME Boiler and Pressure Vessel Code, latest edition.

B. Provide a permanent affixed metal nameplate listing: the name and full contact information for the fabricator, the date of fabrication, and a unique identifying serial number for the tank.

C. Each tank shall be equipped with a tight vermin-proof cover including flexible covers for fill valve float rod opening and float rod. Each tank shall be vented with a return bend vent pipe having an area not less than one half of the area of the overflow riser. The vent opening and overflow riser shall be covered with a non-corrodible metallic screen with openings no larger than #100 mesh.

D. Each tank shall include the following and such other items as detailed on the Drawings:

1. Top – 1/4" steel plate minimum, ASTM A36.
2. Sides – 1/4" steel plate minimum, ASTM A36.
3. Bottom – 1/4" steel plate minimum, ASTM A36.
4. Welded steel stiffeners as required.
5. 24"x 24" manway with gasketed galvanized steel cover, accessibly located in top of tank.
6. 24"x 24" manway with bolted and gasketed galvanized steel cover, accessibly located in sidewall of tank.
7. Affixed stainless steel ladder on the interior of tank and no less than one (1) galvanized steel ladder on the tank exterior. Provide additional ladder(s) if and as required for full access.
8. 150 psi ANSI flanges and 3000 psi forged steel half couplings.

9. Fire pump suction opening complete with 1/4" steel vortex plate, sized and located in accordance with NFPA 20 or prevailing City code, whichever is more stringent.
10. Split flange float access openings for fill valve floats.
11. Stilling wells for floats and electrodes (as required per alarm system provider).
12. Water level gauge consisting of two one half inch angle valves with ball checks, 1/4" needle drain valve with physically protected 5/8” site glass. For outdoor tank installations, in lieu of water level gauge provide an aluminum construction liquid level indicator board with gradations in feet and inches, stainless steel float, galvanized steel housing assembly and stainless steel guide wire. Shand & Jurs model 92302 or equivalent.
13. For outdoor tank installations, top of tank shall be sloped at no less than 1/4 inch per foot to provide drainage and prevent accumulation of rainwater. Additionally, provide secured weather resistant protective boot or shielding against dirt-debris-insects at each float rod penetration, without interfering with valve operation.

2.2 TANK PROTECTIVE COATINGS

A. Application procedures shall conform to the standards of craftsmanship in the Steel Structures Painting Manual, Volume 1, Good Painting Practice. These techniques include, but are not necessarily limited to, multiple passes of the spray gun, with each pass overlapped 50%, and "Cross Hatching" successive coats of paint.

B. Materials shall be thinned only with the manufacturer's recommended thinners, and shall be thinned only the amount required to adjust the viscosity for temperature variations, proper atomization and flow-out.

C. All coats of paint for the interior surfaces shall be from the same manufacturer.

D. Each coat shall be allowed to cure in accordance with manufacturer’s instructions.

E. INTERIOR SURFACE PROTECTIVE COATING SYSTEMS (ANSI/NSF Standard 61 listed for potable water)

1. Surface Preparation: Per SSPC-SP10 (63) near white blast clean, with 2 to 3 mils surface profile.
2. One prime coat of AMERLOCK 2 high-solids Epoxy (ivory) 4-8 mils.
3. Second coat of AMERLOCK 2 (white) 4-8 mils, final dry film thickness of 8-16 mils.
4. Surface Preparation: After fabrication and prior to applying interior tank coating, inside of tank shall be thoroughly cleaned and abrasive blasted on all interior surfaces including ceiling, floor, walls, manways, and nipples to NASE #2 near white surface to obtain a minimum surface profile of 2 mils.
5. Inside and top of tank coating will be two (2) coats to a minimum 15 to 18 mil dry film thickness to all surfaces including interior of nozzles and to the top of the tank. Tank coating systems shall be manufactured and installed by McCrory Engineering, Inc. and a certificate of compliance stating that the lining was installed in accordance with the specifications shall be provided by the manufacturer/applicator. McCrory Engineering, Inc. warranty for McCrory-500 is six (6) years utilizing the McCrory Engineering Preventative Maintenance program of inspections of the application in year 2 and year 4 following the application.

F. EXTERIOR SURFACE PROTECTIVE COATING SYSTEMS

1. Surface Preparation: Per SSPC-SP10 (63) near white blast clean, with 2 to 3 mils

surface profile.

2. Paint the outside of the tank, except top and bottom, with a shop coat, 2-3 mils dry film thickness of Amercoat 185H lead and chromate free, rust inhibitive metal primer (red oxide). One coat of 16 mils dry film thickness Amercoat 78HB coal tar epoxy shall be applied to the bottom and top of the tank.
3. After the tank has been erected at the site, another coat of primer and a final coat of finish paint (of a color chosen by the Architect or Owner) shall be applied under another Division. All primers and paint coating shall be approved by the authorities having jurisdiction for use in potable water systems.
4. Set the bottom of the tank in a coat of mastic that completely covers the area under the tank. The thickness shall be as recommended by the manufacturer to form a monolithic, highly impermeable membrane system compatible with the material of the tank. Mastic shall be Amercoat 78HB coal tar epoxy.
5. Paint the outside of the tank, except top and bottom, with two (2) coats of Amercoat 385 multi-purpose epoxy (8-12 mils dry film thickness) with one (1) coat of Amercoat 450H polyurethane topcoat (2-5 mils dry film thickness) of color **as selected by Architect/Owner**. Two (2) coats of Amercoat 78HB quick dry coal tar (8-10 mils per coat) shall be applied to the bottom of the tank.
6. Set the bottom of the tank in a coat of mastic that completely covers the area under the tank. The thickness shall be as recommended by the manufacturer to form a monolithic, highly impermeable membrane system compatible with the material of the tank. Mastic shall be Amercoat 78HB coal tar epoxy.

2.3 FILL VALVES (FLOAT OPERATED)

A. Fill valve sizes shall be as indicated on the Drawings, be suitable for the indicated flow rate, and each valve shall be capable of re-filling the tank at a minimum rate of 150% of the associated fire pump capacity, per NFPA 20.

B. Fill valves shall be manufactured by Cla-Val, non-modulating, pilot-controlled, float operated valves, with bronze trim, and flanged end connections. Provide minimum 150 psi pressure class, complete with –X46A flow clean strainer, brass float rod of required length, and stainless steel float.

1. Valves 6” and smaller shall be Cla-Val No. 124-01 series, angle pattern.
2. Valves larger than 6” shall be Cla-Val No. 124-02 series, globe pattern.
3. Valves 3” and smaller shall be provided with closing speed control.

2.4 EMERGENCY BLOCK VALVES (SOLENOID OPERATED)

A. Whether indicated on the Drawings or not, for each indoor tank installation where the tank overflow line cannot be gravity routed to the outdoors beyond the building envelope, an emergency block valve shall be provided.

B. Each emergency block valve shall be dedicated solely to fire protection service and shall be sized for the full capacity (flow rate) of the service.

C. Each emergency block valve shall be accessibly provided upstream of the associated fill valves it serves.

D. Each emergency block valve shall be configured to be controlled by the water level alarm system. On high water level a signal shall close the valve and sound the alarm. Valve shall automatically re-open when water level recedes below the high water level.

E. Emergency block valves shall be manufactured by Cla-Val, on-off fast-acting solenoid type, normally open, drip-tight shutoff, full port globe pattern, with bronze trim and flanged

end connections. Provide minimum 150 psi pressure class, complete with –X46A flow clean strainer and –CK2 isolation valve.

14. Valves 3” and smaller shall be Cla-Val No. 136-01 series.
15. Valves 4” and larger shall be Cla-Val No. 136-03 series.

2.5 WATER LEVEL ALARM SYSTEM

A. General Requirements: Contractor shall provide an integrated electrode level monitoring and alarm system as manufactured by Cougar Controls for the tank. The system shall be completely wired and tested prior to shipment. All equipment shall be new. Complete electrical diagrams, dimensional drawing and functional systems description shall be provided to the Engineer for approval.

B. Control System Requirements: The work included in this section shall consist of furnishing all level control relays, terminals, controls, level sensing equipment, alarms, electrode fittings and electrodes, and all other apparatus and accessories specified or necessary for complete electrical control systems. These systems shall be the unit responsibility of one supplier.

C. The UL listed level monitoring and alarm control panel shall be a NEMA Type 4X fiberglass enclosure, Cougar Controls CCXXLC series and shall include the following:

1. Four Liquid Level relays similar to Warrick Series 16 control.
2. “Power On” light.
3. Audible alarm bell with silencing pushbutton.
4. High & Low level alarm lights with nameplates.
5. Auxiliary alarm contacts for remote alarm device.
6. Numbered terminal strip for field connections to electrodes and remote alarm devices.
7. Electrode Fittings & Electrodes.

D. Each tank shall have a Warrick Wire Suspended Electrode Fitting Series 3G or equivalent.

E. Provide required amount of Warrick type 3Z1A Electrode Suspension Wire and type 3W2 SS Wire Suspended Electrodes for each tank. Provide two system reference electrodes, one high level and one low level.

F. Electrode set and arrangement of electrodes from top of tank down for each tank:
No. 1 - High Level Alarm
No. 2 - High Level Reference
No. 3 - Low Water Alarm
No. 4 - Low Level Reference

G. Control System Instructions: A Representative of the control system manufacturer shall be present for a minimum of one day to supervise the final adjustment of the control systems after installation is completed and to instruct the operating personnel in the use of this equipment. The manufacturer shall maintain a local service organization and spare parts available from local stock.

H. Where two tanks are used in unison, a panel with selector switch must be used to avoid duplication of signals and to select control for operating tank when companion tank is down for maintenance

PART 3 - EXECUTION

3.1 INSTALLATION

A. Install tanks in accordance with manufacturer's instructions and to NSF/ASNSI, UL, and NFPA 20 and 22 requirements.

B. Coordinate with piping and related work to achieve a fully operating and compliant system.

C. Provide steel pipe support for tanks, independent of building structural framing members.

D. Clean and flush tank after installation. Seal until pipe connections are made.

E. For outdoor tank installations provide a complete system of electric, self-regulating type, freeze protection heat tracing, insulation, and aluminum jacketing for all exposed water piping, valves, and appurtenances.

3.2 TANK FINISH

A. The engineer shall be advised when blasting is to be accomplished so that he may make arrangements with the tank supplier to inspect the tank(s) immediately after blasting is completed.

B. Inspection of interior coating shall commence only after the coating has sufficiently cured, usually one to five days. Consult the coating manufacturer for specific curing schedule.

C. Film thickness shall be checked with a non-destructive, magnetic pull-off type gauge such as a Mikrotest Model DFG-100 or electronic thickness gauge. The National Bureau of Standards certified thickness calibration plates shall be used to verify accuracy of the thickness gauge.

D. Interior surfaces shall be holiday tested using a 67½" volt DC, 80,000 ohm Tinker-Rasor wet sponge holiday detector, or equal, and shall be furnished by the contractor.

E. Provide written certification to the Architect/Engineer that such tests were performed and successful results obtained.

END OF SECTION

SECTION 22 02 00 - BASIC MATERIALS AND METHODS

PART 1 - GENERAL

1.1 GENERAL REQUIREMENTS

A. The requirements of the General Conditions and Supplementary Conditions apply to all Work herein.

B. The Contract Drawings indicate the extent and general arrangement of the systems. If any departure from the Contract Drawings is deemed necessary by the Contractor, details of such departure and the reasons therefore shall be submitted to the Architect/Engineer for approval as soon as reasonably practicable. No such departures shall be made without the prior written approval of the Architect/Engineer.

C. Notwithstanding any reference in the Specifications to any article, device, product, material, fixture, form or type of construction by name, make or catalog number, such reference shall not be construed as limiting competition; and the Contractor, in such cases, may at his option use any article, device, product, material, fixture, form or type of construction which in the judgment of the Architect/Engineer, expressed in writing, is equal to that specified.

1.2 SCOPE OF WORK

A. The Work included under this Contract consists of the furnishing and installation of all equipment and material necessary and required to form the complete and functioning systems in all of their various phases, all as shown on the accompanying Drawings and/or described in these Specifications. The Contractor shall review all pertinent Drawings, including those of other contracts, prior to commencement of Work.

B. This Division requires the furnishing and installing of all items as specified herein, indicated on the Drawings, or reasonably inferred as necessary for safe and proper operation; including every article, device or accessory (whether or not specifically called for by item) reasonably necessary to facilitate each system's functioning as indicated by the design and the equipment specified. Elements of the work include, but are not limited to: materials, labor, supervision, transportation, storage, equipment, utilities, all required permits, licenses and inspections. All work performed under this Section shall be in accordance with the Project Manual, Drawings and Specifications and is subject to the terms and conditions of the Contract.

C. The approximate locations of Plumbing and Fire Protection items are indicated on the Drawings. These Drawings are not intended to give complete and accurate details with regards to location of outlets, apparatus, etc. Exact locations are to be determined by actual measurements at the building/job-site, and will in all cases be subject to the Review of the Owner or Engineer, who reserves the right to make any reasonable changes in the locations indicated without additional cost to the Owner.

D. Items specifically mentioned in the Specifications but not shown on the Drawings and/or items shown on Drawings but not specifically mentioned in the Specifications shall be installed by the Contractor under the appropriate section of work as if they were both specified and shown.

E. All discrepancies between the Contract Documents and actual job-site conditions shall be reported to the Owner or Engineer so that they will be resolved prior to bidding. Where this cannot be done at least seven (7) working days prior to bid; the greater or more

costly of the discrepancy shall be bid. All labor and materials required to perform the work described shall be included as part of this Contract.

F. It is the intention of this Section of the specifications to outline minimum requirements to furnish the Owner with a turn-key and fully operating system in cooperation with other trades.

G. It is the intent of the above "Scope" to give the Contractor a general outline of the extent of the Work involved; however, it is not intended to include each and every item required for the Work. Anything omitted from the "Scope" but shown on the Drawings, or specified elsewhere, or necessary for complete and functioning plumbing systems shall be considered a part of the overall "Scope".

H. The Contractor shall rough-in fixtures and equipment furnished by others from rough-in and placement drawings furnished by others. The Contractor shall make final connection to fixtures and equipment furnished by others.

I. The Contractor shall participate in the Commissioning process as required; including, but not necessarily limited to: meeting attendance, completion of checklists, and participation in functional testing.

1.3 SCHEMATIC NATURE OF CONTRACT DOCUMENTS

A. The contract documents are schematic in nature in that they are only to establish scope and a minimum level of quality. They are not to be used as actual working construction drawings. The actual working construction drawings shall be the reviewed Shop Drawings.

B. All piping, fixture, or equipment locations as indicated on the documents do not indicate every transition, offset, or exact location. All transitions, offsets, clearances and exact locations shall be established by actual field measurements, coordination with the structural, architectural and reflected ceiling plans, and other trades. Submit Shop Drawings for review.

C. All transitions, offsets and relocations as required by actual field conditions shall be performed by the Contractor at no additional cost to the owner.

D. Additional coordination with Electrical Subcontractor may be required to allow adequate clearances of electrical equipment, fixtures, and associated appurtenances. Contractor to notify Architect and Engineer of unresolved clearances, conflicts, or equipment locations.

1.4 SITE VISIT AND FAMILIARIZATION

A. Before submitting a bid, it will be necessary for each Contractor whose work is involved to visit the site and ascertain for himself the conditions to be met therein in installing his work and make due provision for same in his bid. It will be assumed that this Contractor in submitting his bid has visited the premises and that his bid covers all work necessary to properly install the piping, fixtures and equipment shown. Failure on the part of the Contractor to comply with this requirement shall not be considered justification for the omission or faulty installation of any work covered by these Specifications and Drawings.

B. Understand the existing utilities from which services will be supplied; verify locations of utility services, and determine requirements for connections.

C. Determine in advance that equipment and materials proposed for installation fit into the confines indicated.

1.5 WORK SPECIFIED IN OTHER SECTIONS

A. Finish painting is specified. Prime and protective painting is included in the work of this Division.

B. Owner and General Contractor furnished equipment shall be properly connected to plumbing systems.

C. Furnishing and installing all required plumbing equipment, control relays and electrical interlock devices, conduit, wire and junction boxes are included in the Work of this Division.

1.6 PERMITS, TESTS, INSPECTIONS

A. Arrange and pay for all permits, fees, tests, and all inspections as required by governmental authorities.

1.7 DATE OF FINAL ACCEPTANCE

A. The date of final acceptance shall be the date of Owner occupancy, or the date all punch list items have been completed, or the date final payment has been received. Refer to Division 01 for additional requirements.

B. The date of final acceptance shall be documented in writing and signed by the Architect, Owner and Contractor.

1.8 DELIVERY, STORAGE, AND HANDLING

A. Deliver products to the project properly identified with names, model numbers, types, grades, compliance labels, and other information needed for identification.

B. Deliver products to the project at such times as the project is ready to receive the equipment, pipe or valves - properly protected from incidental damage and weather damage.

C. Damaged equipment, valves or pipe shall be promptly removed from the site and new, undamaged equipment, valves and pipe shall be provided in its place promptly with no additional charge to the Owner.

1.9 NOISE AND VIBRATION

A. The plumbing systems and the component parts thereof shall be guaranteed to operate without objectionable noise and vibration.

B. Provide foundations, supports and isolators as specified or indicated, properly adjusted to prevent transmission of vibration to the building structure, piping and other items.

C. Carefully fabricate pipe and fittings with smooth interior finish to prevent turbulence and generation or regeneration of noise.

D. All equipment shall be selected to operate with minimum of noise and vibration. If, in the opinion of the Architect/Engineer, objectionable noise or vibration is produced or transmitted to or through the building structure by equipment, piping or other parts of the Work, the Contractor shall rectify such conditions without extra cost to the Owner.

1.10 APPLICABLE CODES

A. Obtain all required permits and inspections for all work required by the Contract Documents and pay all required fees in connection thereof.

B. Arrange with the serving utility companies for the connection, relocation, and upgrade of all required utilities and pay all charges, meter charges, connection fees and inspection fees, if required.

C. Comply with all applicable codes, specifications, local ordinances, industry standards, utility company regulations and the applicable requirements of the following nationally accepted codes and standards, including, but not necessarily limited to:

1. American Standards Association, ASA.
2. American Society of Heating, Refrigerating, and Air-Conditioning Engineers, Inc., ASHRAE.
3. American Society of Mechanical Engineers, ASME.
4. American Society of Plumbing Engineers, ASPE.
5. American Society of Testing Materials, ASTM.
6. American Water Works Association, AWWA.
7. National Bureau of Standards, NBS.
8. National Fire Protection Association, NFPA.
9. UL, LLC (formerly Underwriters Laboratories).
10. FM Global.
11. International Energy Conservation Code, IECC.
12. International Fire Code.
13. International Gas Code.

D. Where differences exist between the Contract Documents and applicable state or city building codes, state and local ordinances, industry standards, utility company regulations and the applicable requirements of the above listed nationally accepted codes and standards, the more stringent or costly application shall govern. Promptly notify the Architect/Engineer in writing of all differences.

E. When directed in writing by the Architect/Engineer, remove all work installed that does not comply with the Contract Documents and applicable state or city building codes, state and local ordinances, industry standards, utility company regulations and the applicable requirements of the above listed nationally accepted codes and standards. Correct the deficiencies and complete the work at no additional cost to the Owner.

1.11 DEFINITIONS AND SYMBOLS

A. General Explanation: A substantial amount of construction and Specification language constitutes definitions for terms found in other Contract Documents, including Drawings which must be recognized as diagrammatic and schematic in nature and not completely descriptive of requirements indicated thereon. Certain terms used in Contract Documents are defined generally in this article, unless defined otherwise in Division 01.

B. Definitions and explanations of this Section are not necessarily either complete or exclusive, but are general for work to the extent not stated more explicitly in another provision of the Contract Documents.

C. Indicated: The term "Indicated" is a cross-reference to details, notes or schedules on the Drawings, to other paragraphs or schedules in the Specifications and to similar means of recording requirements in Contract Documents. Where such terms as "Shown", "Noted", "Scheduled", "Specified" and "Detailed" are used in lieu of "Indicated", it is for the

purpose of helping the reader locate cross-reference material, and no limitation of location is intended except as specifically shown.

D. Directed: Where not otherwise explained, terms such as "Directed", "Requested", "Accepted", and "Permitted" mean by the Architect or Engineer. However, no such implied meaning will be interpreted to extend the Architect's or Engineer's responsibility into the Contractor's area of construction supervision.

E. Reviewed: Where used in conjunction with the Engineer's response to submittals, requests for information, applications, inquiries, reports and claims by the Contractor the meaning of the term "Reviewed" will be held to limitations of Architect's and Engineer's responsibilities and duties as specified in the General and Supplemental Conditions. In no case will "Reviewed" by Engineer be interpreted as a release of the Contractor from responsibility to fulfill the terms and requirements of the Contract Documents.

F. Furnish: Except as otherwise defined in greater detail, the term "Furnish" is used to mean supply and deliver new to the project site, ready for unloading, unpacking, assembly, installation, etc., as applicable in each instance.

G. Install: Except as otherwise defined in greater detail, the term "Install" is used to describe operations at the project site including unloading, unpacking, assembly, erection, placing, anchoring, applying, working to dimension, finishing, curing, protection, cleaning and similar operations, as applicable in each instance.

H. Provide: Except as otherwise defined in greater detail, the term "Provide" is used to mean "Furnish and Install", complete and ready for intended use, as applicable in each instance.

I. Installer: Entity (person or firm) engaged by the Contractor or its Subcontractor for performance of a particular unit of work at the project site, including unloading, unpacking, assembly, erection, placing, anchoring, applying, working to dimension, finishing, curing, protection, cleaning and similar operations, as applicable in each instance. It is a general requirement that such entities (Installers) be expert in the operations they are engaged to perform.

J. Imperative Language: Used generally in Specifications. Except as otherwise indicated, requirements expressed imperatively are to be performed by the Contractor. For clarity of reading at certain locations, contrasting subjective language is used to describe responsibilities that must be fulfilled indirectly by the Contractor, or when so noted by other identified installers or entities.

K. Minimum Quality/Quantity: In every instance, the quality level or quantity shown or specified is intended as minimum quality level or quantity of work to be performed or provided. Except as otherwise specifically indicated, the actual work may either comply exactly with that minimum (within specified tolerances), or may exceed that minimum within reasonable tolerance limits. In complying with requirements, indicated or scheduled numeric values are either minimums or maximums as noted or as appropriate for the context of the requirements. Refer instances of uncertainty to Owner or Engineer via a request for information (RFI) for decision before proceeding.

L. Abbreviations and Symbols: The language of Specifications and other Contract Documents including Drawings is of an abbreviated type in certain instances, and implies words and meanings which will be appropriately interpreted. Actual word abbreviations of a self-explanatory nature have been included in text of Specifications and Drawings. Specific abbreviations and symbols have been established, principally for lengthy technical terminology and primarily in conjunction with coordination of Specification

requirements with notations on Drawings and in Schedules. These are frequently defined in Section at first instance of use or on a Legend and Symbol Drawing. Trade and industry association names and titles of generally recognized industry standards are frequently abbreviated. Singular words will be interpreted as plural and plural words will be interpreted as singular where applicable and where full context of Contract Documents so indicate. Except as otherwise indicated, graphic symbols and abbreviations used on Drawings and in Specifications are those recognized in construction industry for indicated purposes. Where not otherwise noted symbols and abbreviations are defined by 2009 ASHRAE Fundamentals Handbook, chapter 34 "Abbreviations and Symbols", ASME and ASPE published standards.

1.12 DRAWINGS AND SPECIFICATIONS

A. These Specifications are intended to supplement the Drawings. It will not be the province of the Specifications to mention any part of the work which the Drawings are competent to fully explain in every particular and such omission shall not to relieve the Contractor from carrying out portions indicated on the Drawings only.

B. Should items be required by these Specifications and not indicated on the Drawings, they are to be supplied even if of such nature that they could have been indicated thereon. In case of disagreement between Drawings and Specifications, or within either Drawings or Specifications, the better quality or greater quantity of work shall be estimated and the matter referred to the Architect or Engineer for review with a request for information and clarification at least seven (7) working days prior to bid opening date for issuance of an addendum.

C. The listing of product manufacturers, materials and methods in the various sections of the Specifications, and indicated on the Drawings, is intended to establish a standard of quality only. It is not the intention of the Owner or Engineer to discriminate against any product, material or method that is equal to the standards as indicated and/or specified, nor is it intended to preclude open, competitive bidding. The fact that a specific manufacturer is listed as an acceptable manufacturer should not be interpreted to mean that the manufacturers' standard product will meet the requirements of the project design, Drawings, Specifications and space constraints.

D. The Architect or Engineer and Owner shall be the sole judge of quality and equivalence of equipment, materials and methods.

E. Products by other reliable manufacturers, other materials, and other methods, will be accepted as outlined, provided they have equal capacity, construction, and performance. However, under no circumstances shall any substitution by made without the written permission of the Architect or Engineer and Owner. **Request for prior approval must be made in writing at least ten (10) days prior to the bid date without fail.**

F. Wherever a definite product, material or method is specified and there is not a statement that another product, material or method will be acceptable, it is the intention of the Owner or Engineer that the specified product, material or method is the only one that shall be used without prior approval.

G. Wherever a definite material or manufacturer's product is specified and the Specification states that products of similar design and equal construction from the specified list of manufacturers may be substituted, it is the intention of the Owner or Engineer that products of manufacturers that are specified are the only products that will be acceptable and that products of other manufacturers will not be considered for substitution without approval.

H. Wherever a definite product, material or method is specified and there is a statement that "OR EQUAL" product, material or method will be acceptable, it is the intention of the Owner or Engineer that the specified product, material or method or an "OR EQUAL" product, material or method may be used if it complies with the specifications and is submitted for review to the Engineer as outline herein.

I. Where permission to use substituted or alternative equipment on the project is granted by the Owner or Engineer in writing, it shall be the responsibility of the Contractor or Subcontractor involved to verify that the equipment will fit in the space available which includes allowances for all required Code and maintenance clearances, and to coordinate all equipment structural support, plumbing and electrical requirements and provisions with the Mechanical and Plumbing Design Documents and all other trades, including Division 26.

J. Changes in architectural, structural, electrical, mechanical, and plumbing requirements for the substitution shall be the responsibility of the bidder wishing to make the substitution. This shall include the cost of redesign by the affected designer(s). Any additional cost incurred by affected Subcontractors shall be the responsibility of this bidder and not the Owner.

K. If any request for a substitution of product, material or method is rejected, the Contractor will automatically be required to furnish the product, material or method named in the Specifications. Repetitive requests for substitutions will not be considered.

L. The Owner or Engineer will investigate all requests for substitutions when submitted in accordance with above and if accepted, will issue a written acceptance allowing the substitutions.

M. Where equipment other than that used in the design as specified or shown on the Drawings is substituted (either from an approved manufacturers list or by submittal review), it shall be the responsibility of the substituting Contractor to coordinate space requirements, building provisions and connection requirements with his trades and all other trades and pay all additional costs to other trades, the Owner, the Architect or Engineer, if any, due to the substitutions.

1.13 SUBMITTALS

A. Coordinate with Division 01 for submittal timetable requirements, unless noted otherwise within thirty (30) days after the Contract is awarded. The Contractor shall submit an electronic copy of a complete set of Shop Drawings and complete data covering each item of equipment or material. The submittal of each item requiring a submittal must be received by the Architect or Engineer within the above thirty (30) day period. The Architect or Engineer shall not be responsible for any delays or costs incurred due to excessive Shop Drawing review time for submittals received after the thirty (30) day time limit. The Architect and Engineer will retain a copy of all Shop Drawings for their files. All literature pertaining to items subject to Shop Drawing submittal shall be submitted at one time. Submittals shall be placed in one electronic file in PDF 8.0 format and bookmarked for individual specification sections. Individual electronic files of submittals for individual specifications shall not be permitted. Each submittal shall include the following items:

1. A cover sheet with the names and addresses of the Project, Architect, MEP Engineer, General Contractor and the Subcontractor making the submittal. The cover sheet shall also contain the section number covering the item or items submitted and the item nomenclature or description.
2. An index page with a listing of all data included in the Submittal.

3. A list of variations page with a listing all variations, including unfurnished or additional required accessories, items or other features, between the submitted equipment and the specified equipment. If there are no variations, then this page shall state "NO VARIATIONS". Where variations affect the work of other Contractors, then the Contractor shall certify on this page that these variations have been fully coordinated with the affected Contractors and that all expenses associated with the variations will be paid by the submitting Contractor. This page will be signed by the submitting Contractor.
4. Equipment information including manufacturer's name and designation, size, performance and capacity data as applicable. All applicable Listings, Labels, Approvals and Standards shall be clearly indicated.
5. Dimensional data and scaled drawings as applicable to show that the submitted equipment will fit the space available with all required Code and maintenance clearances clearly indicated and labeled at a minimum scale of 1/4" = 1'-0", as required to demonstrate that the alternate or substituted product will fit in the space available.
6. Identification of each item of material or equipment matching that indicated on the Drawings.
7. Sufficient pictorial, descriptive and diagrammatic data on each item to show its conformance with the Drawings and Specifications. Any options or special requirements or accessories shall be so indicated. All applicable information shall be clearly indicated with arrows or another approved method.
8. Additional information as required in other Sections of this Division.
9. Certification by the General Contractor and Subcontractor that the material submitted is in accordance with the Drawings and Specifications, signed and dated in long hand. Submittals that do not comply with the above requirements shall be returned to the Contractor and shall be marked "REVISE AND RESUBMIT".

B. Refer to Division 00 and Division 01 for additional information on Shop Drawings and submittals.

C. Equipment and materials submittals and Shop Drawings will be reviewed for compliance with design concept only. It will be assumed that the submitting Contractor has verified that all items submitted can be installed in the space allotted. Review of Shop Drawings and submittals shall not be considered as a verification or guarantee of measurements or building conditions.

D. Where Shop Drawings and submittals are marked "REVIEWED", the review of the submittal does not indicate that submittals have been checked in detail nor does it in any way relieve the Contractor from his responsibility to furnish material and perform work as required by the Contract Documents.

E. Shop Drawings shall be reviewed and returned to the Contractor with one of the following categories indicated:

1. REVIEWED: Contractor need take no further submittal action, shall include this submittal in the O&M manual and may order the equipment submitted on.
2. REVIEWED AS NOTED: Contractor shall submit a letter verifying that required exceptions to the submittal have been received and complied with including additional accessories or coordination action as noted, and shall include this submittal and compliance letter in the O&M manual. The Contractor may order the equipment submitted on at the time of the returned submittal providing the Contractor complies with the exceptions noted.
3. NOT APPROVED: Contractor shall resubmit new submittal on material, equipment or method of installation when the alternate or substitute is not

approved, the Contractor will automatically be required to furnish the product, material or method named in the Specifications and/or Drawings. Contractor shall not order equipment that is not approved. Repetitive requests for substitutions will not be considered.

4. REVISE AND RESUBMIT: Contractor shall resubmit new submittal on material, equipment or method of installation when the alternate or substitute is marked revise and resubmit, the Contractor will automatically be required to furnish the product, material or method named in the Specifications and/or provide as noted on previous Shop Drawings. Contractor shall not order equipment marked revise and resubmit. Repetitive requests for substitutions will not be considered.
5. CONTRACTOR'S CERTIFICATION REQUIRED: Contractor shall resubmit submittal on material, equipment or method of installation. The Contractor's stamp is required stating the submittal meets all conditions of the contract documents. The stamp shall be signed by the General Contractor. The submittal will not be reviewed if the stamp is not placed and signed on all Shop Drawings.
6. MANUFACTURER NOT AS SPECIFIED: Contractor shall resubmit new submittal on material, equipment or method of installation when the alternate or substitute is marked manufacturer not as specified, the Contractor will automatically be required to furnish the product, material or method named in the specifications. Contractor shall not order equipment where submittal is marked manufacturer not as specified. Repetitive requests for substitutions will not be considered.

F. Materials and equipment which are purchased or installed without Shop Drawing review shall be at the risk of the Contractor and the cost for removal and replacement of such materials and equipment and related work which is judged unsatisfactory by the Owner or Engineer for any reason shall be at the expense of the Contractor. The responsible Contractor shall remove the material and equipment noted above and replace with specified equipment or material at his own expense when directed in writing by the Architect or Engineer.

G. Shop Drawing Submittals shall be complete and checked prior to submission to the Engineer for review.

H. Submittals are required for, but not necessarily limited to, the following items:

1. Basic Materials.
2. Plumbing Fixtures and Valves.
3. Supports and Carriers.
4. Floor Drains, Roof Drains, and Cleanouts.
5. Interceptors/Traps (All Types).
6. Water Heaters and Boilers.
7. Expansion Tanks.
8. Water Softeners.
9. Water Treatment Equipment.
10. Water Filters.
11. Domestic Water Booster Pumps.
12. Fire Pumps and Jockey Pumps.
13. Storm, Sanitary, and Wastewater Pumps and Ejectors.
14. Fire Pump and Jockey Pump Controllers.
15. Domestic Water and Fire Protection Break Tanks.
16. Backflow Preventers.
17. Plumbing Piping.
18. Piping, Vessel, and Equipment Insulation.
19. Air Compressors and Air Dryers.
20. Expansion Fittings and Devices.

21. Variable Frequency Drives.
22. Noise and Vibration Controls.
23. Pipe and Equipment Hangers and Supports.
24. Plumbing Specialties.
25. Test, Adjust and Balance Reports.
26. Testing, Adjusting and Balancing Contractor Qualifications.
27. Coordination Drawings.

I. Refer to other Division 22 sections for additional Shop Drawing and submittal requirements. Provide samples of actual materials and/or equipment to be used on the Project upon request of the Owner or Engineer.

1.14 COORDINATION DRAWINGS

A. Prepare coordination drawings to a scale of 1/4"=1'-0" or larger; detailing major elements, components, and systems of plumbing equipment and materials in relationship with other systems, installations, and building components. Indicate locations where space is limited for installation and access and where sequencing and coordination of installations are of importance to the efficient flow of the Work, including (but not necessarily limited to) the following:

1. Indicate the proposed locations of pipe, equipment, and other materials. Include the following:
   a. Wall locations and types.
   b. Clearances for installing and maintaining insulation.
   c. Locations of light fixtures and sprinkler heads.
   d. Clearances for servicing and maintaining equipment, including tube removal and space for equipment disassembly required for periodic maintenance.
   e. Equipment connections and support details.
   f. Exterior wall and foundation penetrations.
   g. Routing of storm, sanitary sewer piping and plumbing piping.
   h. Fire-rated wall and floor penetrations.
   i. Sizes and location of required concrete pads and bases.
   j. Valve stem movement.
   k. Structural floor, wall and roof opening sizes and details.
2. Indicate scheduling, sequencing, movement, and positioning of large equipment into the building during construction.
3. Prepare floor plans, elevations, and details to indicate penetrations in floors, walls, and ceilings and their relationship to other penetrations and installations.

B. This Contractor shall be responsible for coordination of all items that will affect the installation of the work of this Division. This coordination shall include, but not be limited to: voltage, ampacity, capacity, electrical and piping connections, space requirements, sequence of construction, building requirements and special conditions.

C. By submitting Shop Drawings on the project, this Contractor is indicating that all necessary coordination has been completed and that the systems, products and equipment submitted can be installed in the building and will operate as specified and intended, in full coordination with all other Contractors and Subcontractors.

1.15 RECORD DOCUMENTS

A. Prepare Record Documents in accordance with the requirements of Division 00 and Division 01, in addition to the requirements specified in Division 22.

B. The Contractor shall maintain a separate set of clearly and legibly marked Record Drawings on the job site to record all changes and modifications, including, but not limited to the following: work details, alterations to meet site conditions, and changes made by "Change Order" notices. Mark the drawings with colored pencil(s). These shall be available for review by the Owner, Architect or Engineer during the entire construction stage.

C. The Record Drawings shall be updated concurrently as construction progresses, and in no case less frequently than a daily basis. They shall indicate accurate dimensions for all buried or concealed work; precise locations of all concealed pipe; locations of all valves, controls and operable devices; and any deviations from the work shown on the Construction Documents. All dimensions shall include at least two dimensions to permanent structure points.

D. Record Drawings shall indicate, at a minimum, the following installed conditions:

1. Mains and branches of piping systems, with valves and control devices located and numbered, unions located, and with items requiring maintenance located (i.e., traps, strainers, expansion fittings, tanks, etc.). Valve location diagrams, complete with valve tag chart. Indicate actual inverts and horizontal locations of underground piping.
2. Equipment locations (exposed and concealed), dimensioned from prominent building lines.
3. Approved substitutions, Contract Modifications, and actual equipment and materials installed.
4. Contract Modifications, actual equipment and materials installed.

E. Engage the services of a Land Surveyor or Professional Engineer registered in the state in which the project is located as specified herein to record the locations and invert elevations of underground installations.

F. If the Contractor does not keep an accurate set of Record Documents, the pay request may be altered or delayed at the request of the Architect. Delivery of Record Documents is a condition of final acceptance. Record Drawings shall be furnished in addition to Shop Drawings.

G. Upon completion of the Work, the Contractor shall submit three (3) full size sets of Record Drawing prints to the Architect or Engineer for review prior to scheduling the final inspection at the completion of the work. The drawings shall have the name(s) and seal(s) of the Engineer(s) removed or blanked out and shall be clearly marked and signed on each sheet as follows:

CERTIFIED RECORD DRAWINGS

DATE:

(NAME OF GENERAL CONTRACTOR)

BY:_____
(SIGNATURE)

(NAME OF SUBCONTRACTOR)

BY:_____
(SIGNATURE)

1.16 CERTIFICATIONS AND TEST REPORTS

A. Submit a detailed schedule for completion and testing of each system indicating scheduled dates for completion of system installation and outlining tests to be performed and scheduled dates for each test. This detailed completion and test schedule shall be submittal at least ninety (90) days before the projected Project completion date.

B. Test result reporting forms shall be submitted for review no later than the date of the detailed schedule submitted.

C. Submit four (4) copies of all certifications and test reports to the Architect or Engineer for review adequately in advance of completion of the Work to allow for remedial action as required to correct deficiencies discovered in equipment and systems.

D. Certifications and test reports to be submitted shall include, but not be limited to those items outlined in other Sections of Division 22.

1.17 OPERATIONS AND MAINTENANCE MANUALS

A. Prepare Operations and Maintenance manuals in accordance with the requirements of Division 01 and Division 22. In addition to the requirements of other Sections, this shall include the following information for fixtures, specialties, and equipment items:

1. Identifying names, name tags designations and locations for all equipment.
2. Valve tag lists with valve number, type, color coding, location and function.
3. Reviewed Shop Drawing submittals with exceptions noted compliance letter.
4. Fabrication drawings.
5. Equipment and device bulletins and data sheets clearly highlighted to show equipment installed on the project and including performance curves and data as applicable, i.e., description of function, normal operating characteristics and limitations, performance curves, engineering data and tests, and complete nomenclature and model numbers of replacement parts.
6. Manufacturer's printed operating procedures to include start-up, break-in, and routine and normal operating instructions; regulation, control, stopping, shutdown, and emergency instructions; and summer and winter operating instructions.
7. Maintenance procedures for routine preventative maintenance and troubleshooting; disassembly, repair, and reassembly; aligning and adjusting instructions.
8. Servicing instructions and lubrication charts and schedules.
9. Equipment and motor name plate data.
10. Wiring diagrams.
11. Exploded parts views and parts lists for all equipment and devices.
12. Color coding charts for all painted equipment and conduit.
13. Location and listing of all spare parts and special keys and tools furnished to the Owner.
14. Furnish recommended lubrication schedule for all required lubrication points with listing of type and approximate amount of lubricant required.

B. Coordinate with Division 01 for Operations and Maintenance manual requirements. Unless noted otherwise, bind together in “D ring” style three-ring binders (National model no. 79-883 or equivalent). Binders shall be large enough to allow ¼” of spare capacity. Include three (3) sets with all approved Shop Drawing submittals, fabrication drawings, bulletins, maintenance instructions, operating instructions and parts exploded views and lists for each and every piece of equipment furnished under this Specification. All sections shall be typed and indexed into sections with tabbed insertable dividers, labeled

for easy reference. Utilize the individual specification section numbers shown in the Plumbing Specifications as an organization guideline. Bulletins containing information about equipment that is not installed on the project shall be properly marked up or stripped and reassembled. All pertinent information required by the Owner for proper operation and maintenance of equipment supplied by Division 22 shall be clearly and legibly set forth in memoranda that shall, likewise, be bound with bulletins.

C. In addition to the bound “hard-copy” Operation and Maintenance manuals referenced above, provide an identical electronic copy in searchable PDF format, with all sections bookmarked within the file for easy reference. Provide a USB flash drive with the final manual to the Owner.

D. Operating and Maintenance Manuals shall be turned over to the Owner or Engineer for review a minimum of fourteen (14) working days prior to the beginning of the operator training period.

E. **Operating and Maintenance Manuals which the Engineer deems incomplete, poorly organized, or otherwise unacceptable will be rejected in writing**. The Contractor will subsequently be required to again turn over Operating and Maintenance Manuals, with all deficiencies corrected, until deemed acceptable by the Engineer.

1.18 OPERATOR TRAINING

A. The Contractor shall furnish the services of factory trained specialists to instruct the Owner's operating personnel. The Owner's operator training shall include a minimum of 12 hours of on- site training in three (3) shifts of four (4) hours each.

B. Before proceeding with the instruction of Owner’s Personnel, prepare a typed outline in triplicate, listing the subjects that will be covered in this instruction, and submit the outline for review by the Owner. At the conclusion of the instruction period, obtain the signature of each person being instructed on each copy of the reviewed outline to signify that he or she has a proper understanding of the operation and maintenance of the systems and then resubmit the signed outlines.

C. Refer to other Sections of Division 22 for additional Operator Training requirements.

1.19 FINAL COMPLETION

A. At the completion of the work, all equipment, operable appurtenances, and systems shall be tested. All faulty equipment and material shall be repaired or replaced. Refer to other Sections of Division 22 for additional requirements.

B. Clean and adjust all fixtures, flushometers, valves and operable devices. Replace faulty or otherwise damaged parts immediately prior to final acceptance.

C. Touch up and/or refinish any scratched equipment and devices immediately prior to final acceptance. This shall be acceptable **only for minor superficial scratches**, the determination of which rests solely on the judgment of the Architect or Engineer.

1.20 CONTRACTOR'S GUARANTEE

A. Use of the Plumbing systems to provide temporary service during the construction period shall not be allowed without written permission from the Owner, and, if granted, shall not be cause for the warranty period to start, except as defined below.

B. Contractor shall guarantee to keep the entire installation in repair and perfect working order for a period of one (1) year after its completion and final acceptance, and shall furnish free of additional cost to the Owner all materials and labor necessary to comply with the above guarantee throughout the year beginning from the date of issue of Substantial Completion, Beneficial Occupancy by the Owner, or the Certificate of Final Payment as agreed upon by all parties.

C. This guarantee shall not include cleaning or changing filters except as required by testing, adjusting and balancing.

D. All air compressors shall have parts and labor guarantees for a period of not less than five (5) years beyond the date of final acceptance.

E. Refer to other Sections of Division 22 for additional guarantee or warranty requirements.

1.21 TRANSFER OF ELECTRONIC FILES

A. Project documents are not intended or represented to be suitable for re-use by Architect/Owner or others on extensions of this project or on any other project. Any such re-use or modification without written verification or adaptation by Engineer, as appropriate for the specific purpose intended, will be at Architect/Owner's risk and without liability or legal exposure to Engineer or its consultants from all claims, damages, losses and expense, including attorney's fees arising out of or resulting thereof.

B. Because data stored in electric media format can deteriorate or be modified inadvertently, or otherwise without authorization of the data's creator, the party receiving the electronic files agrees that it will perform acceptance tests or procedures within sixty (60) days of receipt, after which time the receiving party shall be deemed to have accepted the data thus transferred to be acceptable. Any errors detected within the sixty (60) day acceptance period will be corrected by the party delivering the electronic files. Engineer is not responsible for maintaining documents stored in electronic media format after acceptance by the Architect/Owner.

C. When transferring documents in electronic media format, Engineer makes no representations as to the long-term compatibility, usability or readability of documents resulting from the use of software application packages, operating systems, or computer hardware differing from those used by Engineer at the beginning of the Project.

D. Any re-use or modifications will be Contractor's sole risk and without liability or legal exposure to Architect, Engineer or any consultant.

E. The Texas Board of Architectural Examiners (TBAE) has stated that it is in violation of Texas law for persons other than the Architect of record to revise the Architectural drawings without the Architect's written consent.

1. It is agreed that "MEP" hard copy or computer-generated documents will not be issued to any other party except directly to the Architect/Owner. The Contract Documents are contractually copyrighted and cannot be used for any other project or purpose except as specifically indicated in AIA B-141 Standard Form of Agreement Between Architect and Owner.
2. If the client, Architect/Owner, or developer of the project requires electronic media for "record purposes", then an AutoCAD based compact disc ("CD") will be prepared. The "CD" will be submitted with all title block references intact and will be formatted in a "plot" format to permit the end user to only view and plot the drawings. Revisions will not be permitted in this configuration.

F. At the Architect/Owner's request, Engineer will prepare one "CD" of electronic media to assist the Contractor in the preparation of submittals. The Engineer will prepare and submit the "CD" to the Architect/Owner for distribution to the Contractor.

1. The "CD" will be prepared and all title blocks, names and dates will be removed. The "CD" will be prepared in a ".dwg" format to permit the end user to revise the drawings.

PART 2 - PRODUCTS

2.1 MATERIALS

A. Provide materials and equipment manufactured by a domestic United States manufacturer and assembled in the United States for all local and Federal Government projects. These materials and equipment shall comply with "Buy American Act."

B. Access Doors: Provide access doors as required for access to equipment, valves, controls, cleanouts and other apparatus where concealed. Access doors shall have concealed hinges and screw driver cam locks unless indicated otherwise.

C. All access panels located in wet areas such as toilet rooms, locker rooms, shower rooms, natatoriums, kitchens, and any other wet areas shall be constructed of stainless steel.

D. Access doors shall be as follows:

1. Plastic Surfaces: Milcor Style K.
2. Ceramic Tile Surfaces: Milcor Style M.
3. Drywall Surfaces: Milcor Style DW.
4. Install panels only in locations approved by the Architect.

2.2 EQUIPMENT PADS

A. Provide four (4) inch high concrete pads for indoor floor mounted equipment. Pads shall conform to the shape of the equipment with a minimum extension of six (6) inches beyond the equipment. Top and sides of pads shall be troweled to a smooth finish, equivalent to the floor. External corners shall be bull-nosed to a 3/4" radius, unless shown otherwise.

B. Provide six (6) inch high concrete pads for all exterior mounted equipment. Pads shall conform to the shape of the equipment with a minimum extension of six (6) inches beyond the equipment. Provide a four (4) foot monolithic extension to the pad in front of the equipment for service when mounted on a non-finished area (i.e. landscape, gravel, clay, etc.) Top and sides of pads shall be troweled to a smooth finish. External corners shall be bull-nosed to a 3/4" radius, unless shown otherwise.

PART 3 - EXECUTION

3.1 ROUGH-IN

A. Verify final locations for rough-ins with field measurements and with the requirements of the actual equipment to be connected via reviewed submittals.

B. Refer to equipment specifications in other Divisions (10, 11, 12, 13, 21, 22, etc.) for additional rough-in requirements as necessary and provide accordingly.

3.2 PLUMBING INSTALLATIONS

A. General: Sequence, coordinate, and integrate the various elements of plumbing and fire systems, materials, and equipment. Comply with the following requirements:

1. Coordinate plumbing and fire protection systems, equipment, and materials installation with other building components.
2. Verify all dimensions by field measurements.
3. Arrange for chases, slots, leave-outs, and other openings in building components during progress of construction to allow for plumbing installations.
4. Coordinate the installation of required supporting devices, sleeves, and pathways to be set in poured-in-place concrete and other structural components, as they are constructed.
5. Sequence, coordinate, and integrate installations of plumbing materials and equipment for efficient flow of the Work. Give particular attention to large equipment requiring positioning prior to closing in the building.
6. Where mounting heights are not detailed or dimensioned, install systems, materials, and equipment to provide the maximum headroom possible.
7. Coordinate connection of plumbing and fire protection systems with exterior underground and overhead utilities and services. Comply with requirements of governing regulations, franchised service companies, and controlling agencies. Provide required connection for each service.
8. Install systems, materials, and equipment to conform with architectural action markings on submittal, including coordination drawings, to greatest extent possible. Conform to arrangements indicated by the Contract Documents, recognizing that portions of the Work are shown only in diagrammatic form. Where coordination requirements conflict with individual system requirements, resolve conflicts and submit proposed solution to the Architect for review.
9. Install systems, materials, and equipment level and plumb, parallel and perpendicular to other building systems and components, where installed exposed in finished spaces.
10. Install equipment to facilitate servicing, maintenance, and repair or replacement of equipment components. As much as practical, connect equipment for ease of disconnecting, with minimum of interference with other installations. Extend grease fittings to an accessible location and label.
11. Install access panels or doors where valves, operable devices, and equipment are concealed behind finished surfaces. Refer to Article 2.1 of this Section and to Architectural documents for specifications and locations.
12. Install systems, materials, and equipment giving right-of-way priority to systems required to be installed at a specified slope.
13. Provide roof curbs for all roof mounted equipment. Coordinate with roof construction for pitched roof. Provide roof curb to match roof slope. Refer to architectural drawings and details.
14. The equipment to be furnished under this Specification shall be essentially the standard product of the manufacturer. Where two or more units of the same class of equipment are required, these units shall be products of a single manufacturer; however, the component parts of the system need not be the product of the same manufacturer.
15. The architectural and structural features of the building and the space limitations shall be considered in selection of all equipment. No equipment shall be furnished which will not suit the arrangement and space limitations indicated.
16. Lubrication: Prior to start-up, check and properly lubricate all bearings as recommended by the manufacturer.
17. Where the word "Concealed" is used in these Specifications in connection with insulating, painting, piping, valves, etc., it shall be understood to mean hidden from sight as in chases, furred spaces or suspended ceilings. "Exposed" shall be understood to mean the opposite of concealed.

18. Identification of Plumbing Equipment:
    a. Plumbing equipment shall be identified by means of nameplates permanently attached to the equipment. Nameplates shall be engraved laminated plastic or etched metal. Shop Drawings shall include dimensions and lettering format for approval. Attachments shall be with escutcheon pins, self-tapping screws, or machine screws.
    b. Tags shall be attached to all valves, including control valves, with nonferrous chains. Tags shall be brass and at least 1-1/2 inches in diameter. Nameplate and tag symbols shall correspond to the identification symbols on the Record Drawings.

3.3 CUTTING AND PATCHING

A. Protection of Installed Work: During cutting and patching operations, protect adjacent installations.

B. Perform cutting, fitting, and patching of plumbing equipment and materials required to:

1. Uncover Work to provide for installation of ill-timed Work.
2. Remove and replace defective Work.
3. Remove and replace Work not conforming to requirements of the Contract Documents.
4. Remove samples of installed Work as specified for testing.
5. Install equipment and materials in existing structures.
6. Upon written instructions from the Engineer, uncover and restore Work to provide for Engineer/Owner's observation of concealed Work, without additional cost to the Owner.
7. Patch existing finished surfaces and building components using new materials matching existing materials and experienced Installers. Patch finished surfaces and building components using new materials specified for the original installation and experienced Installers; refer to the materials and methods required for the surface and building components being patched; Refer to Article 1.11 DEFINITIONS AND SYMBOLS for definition of "Installer."

C. Cut, remove and legally dispose of selected plumbing equipment, components, and materials as indicated, including but not limited to removal of plumbing piping, equipment, plumbing fixtures and trim, and other plumbing items made obsolete by the new Work.

D. Protect the structure, furnishings, finishes, and adjacent materials not indicated or scheduled to be removed.

E. Provide and maintain temporary partitions or dust barriers adequate to prevent the spread of dust and dirt to adjacent areas.

3.4 WORK SEQUENCE, TIMING, COORDINATION WITH OWNER, ARCHITECT AND ENGINEER

A. The Owner will cooperate with the Contractor, however, the following provisions must be observed:

1. A meeting will be held at the project site, prior to any construction, between the Owner's Representative, the General Contractor, the Subcontractors and the Architect/Engineer to discuss Contractor's employee parking space, access, storage of equipment or materials, and use of the Owner's facilities or utilities. The Owner's decisions regarding such matters shall be final.
2. During the construction of this project, normal facility activities will continue in existing buildings until renovated areas are completed. Plumbing, fire protection,

lighting, electrical, communications, heating, air conditioning, and ventilation systems will have to be maintained in service within the occupied spaces of the existing building.

B. Start-up for major plumbing and fire protection equipment shall be performed by a factory authorized technician. Such equipment shall include, but not necessarily be limited to, the following: domestic water boilers and packaged water heating systems, water softeners, ultra-pure water equipment systems, domestic water booster pumps, fire pumps, and break tank level alarm systems. Refer to other Sections of Divisions 21 and 22 for additional requirements.

3.5 DEMOLITION AND WORK WITHIN EXISTING BUILDINGS

A. In the preparation of these documents every effort has been made to show the approximate locations of, and connections to the existing piping, utilities, equipment and other apparatus related to this phase of the work. However, this Contractor shall be responsible for verifying all of the above information. This Contractor shall visit the existing site to inspect the facilities and related areas. This Contractor shall inspect and verify all details and requirements of all the Contract Documents, prior to the submission of a proposal. All discrepancies between the Contract Documents and actual job-site conditions shall be resolved by this Contractor, who shall produce drawings that shall be submitted to the Architect/Engineer for review. All labor and materials required to perform the work described shall be a part of this Contract.

B. All equipment and/or systems noted on the Drawings "To Remain" shall be inspected and tested on site to certify its working condition. A written report on the condition of all equipment to remain, including a copy of the test results and recommended remedial actions and costs shall be made by this Contractor to the Architect/Engineer for review.

C. All equipment and/or systems noted on the Drawings "To Be Removed" shall be removed including, associated pipe, supports, and hangers. Where pipe is to be capped for future or end of line use, it shall be properly tagged with its function or service appropriately identified. Where existing equipment is to be removed or relocated and has an electric motor or connection, the Electrical Contractor shall disconnect motor or connection, remove wiring to a safe point and this Contractor shall remove or relocate motor or connection along with the equipment.

D. Ensure existing piping and equipment to remain that is adjacent to and impacted by the scope of Work is properly supported, fastened, and secure.

E. During the construction and remodeling, portions of the Project shall remain in service. Construction equipment, material tools, extension cords, etc., shall be arranged so as to present minimum hazard or interruption to the occupants of the building. None of the construction work shall interfere with the proper operation of the existing facility or be so conducted as to cause harm or danger to persons on the premises. All fire exits, stairs or corridors required for proper access, circulation or exit shall remain clear of equipment, materials or debris. The General Contractor shall maintain barricades, other separations in corridors and other spaces where work is conducted.

F. Certain work during the demolition phase of construction may require overtime, night time, or weekend shifts or temporary evacuation of the occupants. Coordinate and schedule all proposed down time with the Owner at least seventy-two (72) hours in advance in writing.

G. Any salvageable equipment as determined by the Owner, shall be delivered to the Owner, and placed in storage at the location of his choice. All other debris shall be removed from the site immediately and disposed of lawfully.

H. Equipment, piping or other potential hazards to the working occupants of the building or the general public shall not be left overnight outside of the designated working or construction area.

I. Make every effort to minimize damage to the existing building and the Owner's property. Repair, patch or replace as required any damage that occurs as a result of work at the site. Care shall be taken to minimize interference with the Owner's activities during construction and to keep construction disrupted areas to a minimum. Coordinate with the Owner and other trades in scheduling and performance of the work.

J. Include in the contract price all rerouting of existing pipe, utilities, etc., and the reconnecting of the existing equipment and plumbing fixtures as necessitated by field conditions to allow the installation of the new systems regardless of whether or not such rerouting, reconnecting or relocating is shown on the Drawings. Provide all temporary pipe, utilities, controls, etc., as required to maintain heating, cooling, ventilation and plumbing services for the existing areas with a minimum of interruption.

K. All existing plumbing fixtures, pipe, utilities, materials, equipment, controls and appurtenances not included in the remodel or alteration areas are to remain in place.

L. Pipe, utilities, equipment and controls serving mechanical, plumbing and owner's equipment, etc., which is to remain but which is served by pipe, utilities, equipment and controls that are disturbed by the remodeling work, shall be reconnected in such a manner as to leave this equipment in proper operating condition.

M. No portion of the **fire protection systems** shall be turned off, modified or changed in any way without the express knowledge and written permission of the Owner’s representative in order to protect systems that shall remain in service.

N. It is the intention of this Section of the Specifications to outline minimum requirements to furnish the Owner with a turn-key and operating system in cooperation with other trades with a minimum of disruption or downtime.

O. Refer to Architectural Demolition and/or Alteration plans for actual locations of walls, ceiling, etc., being removed and/or remodeled.

END OF SECTION

SECTION 22 05 13 – COMMON MOTOR REQUIREMENTS FOR PLUMBING EQUIPMENT

PART 1 - GENERAL

1.1 GENERAL REQUIREMENTS

A. The requirements of the General Conditions and Supplementary Conditions apply to all work herein.

B. The Basic Materials and Methods, Section 22 02 00, are included as a part of this Section as though written in full in this document.

1.2 SCOPE

A. Scope of the Work shall include the furnishing and complete installation of the equipment covered by this Section, with all auxiliaries, ready for owner's use.

B. WORK SPECIFIED ELSEWHERE:

1. Painting.
2. Power control wiring to motors and equipment.

1.3 WARRANTY

Warrant the Work specified herein for one year and motors for five years beginning on the date of substantial completion against becoming unserviceable or causing an objectionable appearance resulting from either defective or nonconforming materials and workmanship.

1.4 SUBMITTALS

A. SHOP DRAWINGS: Indicate size material, and finish. Show locations and installation procedures. Include details of joints, attachments, and clearances.

B. PRODUCT DATA: Submit schedules, charts, literature, and illustrations to indicate the performance, fabrication procedures variations, and accessories.

C. MOTOR NAMEPLATE INFORMATION: Manufacturer's name, address, utility and operating data.

D. Refer to Division One for additional information.

1.5 DELIVERY AND STORAGE

A. DELIVERY: Deliver clearly labeled, undamaged materials in the manufacturers' unopened containers.

B. TIME AND COORDINATION: Deliver materials to allow for minimum storage time at the project site. Coordinate delivery with the scheduled time of installation.

C. STORAGE: Store materials in a clean, dry location, protected from weather and abuse.

PART 2 - PRODUCTS

2.1 ELECTRIC MOTORS

A. APPROVED MANUFACTURERS: Provide motors by a single manufacturer as much as

possible.

1. Baldor
2. Marathon
3. Siemens-Allis
4. General Electric
5. U.S. Motor

B. TEMPERATURE RATING: Provide insulation as follows:

1. CLASS B: 40 degrees C maximum.
2. CLASS F:
   a. Between 40 degrees C and 65 degrees C maximum.
   b. Totally enclosed motors.

C. STARTING CAPABILITY: As required for service indicated five starts minimum per hour.

D. PHASES AND CURRENT: Verify electrical service compatibility with motors to be used.

1. UP TO 1/2 HP: Provide permanent split, capacitor-start single phase with inherent overload protection.
2. 3/4 HP AND LARGER: Provide squirrel-cage induction polyphase motors.
3. Provide two separate windings on 2-speed polyphase motors.
4. Name plate voltage shall be the same as the circuit's normal voltage, serving the motor.

E. SERVICE FACTOR: 1.15 for polyphase; 1.35 for single phase.

F. FRAMES: U-frames 1.5 hp. and larger.

G. BEARINGS: Provide sealed re-greasable ball bearings; with top mounted zerc lubrication fittings and bottom side drains minimum average life 100,000 hours typically, and others as follows:

1. Design for thrust where applicable.
2. PERMANENTLY SEALED: Where not accessible for greasing.
3. SLEEVE-TYPE WITH OIL CUPS: Light duty fractional horsepower motors or polyphase requiring minimum noise level.

H. ENCLOSURE TYPE: Provide enclosures per applications as follows:

1. CONCEALED INDOOR: Open drip-proof (ODP).
2. EXPOSED INDOOR: Splash-proof.
3. OUTDOOR TYPICAL: Type III, totally enclosed fan-cooled (TEFC).
4. OUTDOOR WEATHER PROTECTED: Weather protected II (WPII).
5. HAZARDOUS LOCATIONS: Explosion-proof.

I. OVERLOAD PROTECTION: Built-in sensing device for stopping motor in all phase legs and signaling where indicated for fractional horse power motors.

J. NOISE RATING: "Quiet" except where otherwise indicated.

K. EFFICIENCY: Minimum full load efficiency listed in the following table, when tested in accordance with IEEE Test Procedure 112A, Method B, including stray load loss measure.

Motor Horsepower	NEMA Efficiency INDEX Letter	Minimum Efficiency %
	1800 RPM Synchronous Speed	
7.5-10	F	89.5
15-20	E	91.0
25-30	E	92.4
40	D	93.0
50	C	93.0
60	C	93.6
75	C	94.1
100-125	B	94.5
150-200	B	95.0
	1200 RPM Synchronous Speed	
3-5	G	87.5
7.5	G	89.5
10	F	89.5
15	F	90.2
20	E	90.2
25-30	E	91.7
40-50	D	93.0
60	D	93.6
75	C	93.6
100-125	C	94.1
150-200	B	95.0

2.2 MOTOR CONTROLLERS (STARTERS)

A. All motor controllers (for equipment furnished under Division 22) shall be furnished under Division 22 and installed under Division 26 unless otherwise noted on the plans.

1. Starters shall be provided for 3 phase motors 3/4 horsepower and greater.

B. Motor starters shall be furnished as follows.

1. GENERAL: Motor starters shall be Square D Company Class 8536 across-the-line magnetic type, full-voltage, non-reversing (FAVOR) starter. All starters shall be constructed and tested in accordance with the latest NEMA standards, sizes and horsepower. ICE sizes are not acceptable. Starters shall be mounted in a general purpose dead front, painted steel enclosure and surface-mounted. Provide size and number of poles as shown and required by equipment served. Provide two speed, two winding or two speed, single winding motor starter as required for two speed motors.
2. CONTACTS: Magnetic starter contacts shall be double break solid silver alloy. All contacts shall be replaceable without removing power wiring or removing starter from panel. The starter shall have straight-through wiring.
3. OPERATING COILS: Operating coils shall be 120 volts and shall be of molded construction. When the coil fails, the starter shall open and shall not lock in the closed position.
4. OVERLOAD RELAYS: Provide manual reset, trip-free Class 20 overload relays in each phase conductor in of all starters. Overload relays shall be melting alloy type with visual trip indication. All 3 phase and single phase starters shall have one overload relay in each underground conductor. Relay shall not be field adjustable from manual to automatic reset. Provide 6 overload relays for two

speed motor starters.

5. PILOT LIGHTS: Provide a red running pilot light for all motor starters. Pilot lights shall be mounted in the starter enclosure cover. Pilot lights shall be operated from an interlock on the motor starter and shall not be wired across the operating coil.
6. CONTROLS: Provide starters with HAND-OFF-AUTOMATIC switches. Coordinate additional motor starter controls with the requirements of Division 22. Motor starter controls shall be mounted in the starter enclosure cover.
7. CONTROL POWER TRANSFORMER: Provide a single-phase 480 volt control power transformer with each starter for 120 volt control power. Connect the primary side to the line side of the motor starter. The primary side shall be protected by a fuse for each conductor. The secondary side shall have one leg fused and one leg grounded. Arrange transformer terminals so that wiring to terminals will not be located above the transformer.
8. AUXILIARY CONTACTS: Each starter shall have one normally open and one normally closed convertible auxiliary contact in addition to the number of contacts required for the "holding interlock", remote monitoring, and control wiring. In addition, it shall be possible to field-install three more additional auxiliary contacts without removing existing wiring or removing the starter from its enclosure.
9. UNIT WIRING: Unit shall be completely pre-wired to terminals to eliminate any interior field wiring except for line and load power wiring and HVAC control wiring.
10. ENCLOSURES: All motor starter enclosures shall be NEMA 1, general purpose enclosures or NEMA-3R if mounted exposed to high moisture conditions. Provide NEMA 4X when located by cooling towers, fountains, or similar locations.
11. POWER MONITOR: Provide a square "D" 8430 MPS phase failure and under-voltage relay, base and wiring required for starters serving all 3 phase motors. Set the under-voltage setting according to minimum voltage required for the motor to operate within its range.

C. APPROVED MANUFACTURERS: Controller numbers are based on first named manufacturer. Provide one of the following manufacturers.

1. Siemens.
2. Square D.
3. General Electric.
4. Eaton.

2.3 COMBINATION MOTOR STARTERS

A. GENERAL: Combination motor starters shall consist of a magnetic starter and a fusible or non-fusible disconnect switch in a dead front, painted steel NEMA 1 enclosure unless otherwise noted and shall be surface-mounted. Size and number of poles shall as shown and required by equipment served. Combination motor starters shall be as specified for motor starters in Paragraph 2.1/B, except as modified herein.

B. DISCONNECT SWITCH: Disconnect switches shall be as specified in Division 26.

C. APPROVED MANUFACTURERS: Controller numbers are based on first named manufacturer. Provide one of the following manufacturers.

1. Siemens.
2. Square D.
3. General Electric.

PART 3 - EXECUTION

3.1 All equipment shall be installed in accordance with the manufacturers' recommendations and printed installation instructions.

3.2 All items required for a complete and proper installation are not necessarily indicated on the plans or in the specifications. Contractors' price shall include all items required as per manufacturers' requirements.

3.3 INSTALLATION

A. GENERAL: Install in a professional manner. Any part or parts not meeting this requirement shall be replaced or rebuilt without extra expense to Owner.

B. Install rotating equipment in static and dynamic balance.

C. Provide foundations, supports, and isolators properly adjusted to allow minimum vibration transmission within the building.

D. Correct objectionable noise or vibration transmission in order to operate equipment satisfactorily as determined by the Engineer.

END OF SECTION

SECTION 22 05 16 – EXPANSION FITTINGS AND LOOPS FOR PLUMBING PIPING

PART 1 - GENERAL

1.1 WORK INCLUDED

A. Flexible pipe connections.

B. Expansion joints and compensators

C. Pipe loops, offsets, and swing joints.

1.2 RELATED WORK

A. Section 22 05 29 – Hangers and Support for Plumbing Piping and Equipment.

B. Section 22 10 00 – Plumbing Piping.

1.3 PERFORMANCE REQUIREMENTS

A. Provide structural work and equipment required to control expansion and contraction of piping. Verify that anchors, guides, and expansion joints provided, adequately protect system.

B. Expansion Calculations:

1. Installation Temperature: 50 degrees F (10 degrees C).
2. Hot Water Heating: 210 degrees F (99 degrees C).
3. Domestic Hot Water: 140 degrees F (60 degrees C).
4. Safety Factor: 30 percent.

C. Pipe sizes indicated are to establish a minimum quality of compensator. Refer to manufacturers' literature for model series for different pipe sizes.

1.4 SUBMITTALS

A. Submit shop drawings under provisions of Division One.

B. Product Data:

1. Flexible Pipe Connectors: Indicate maximum temperature and pressure rating, face-to-face length, live length, hose wall thickness, hose convolutions per foot (meter) and per assembly, fundamental frequency of assembly, braid structure, and total number of wires in braid.
2. Expansion Joints: Indicate maximum temperature and pressure rating, and maximum expansion compensation.

C. Design Data: Indicate selection calculations.

D. Manufacturer's Installation Instructions: Indicate special procedures, and external controls.

1.5 PROJECT RECORD DOCUMENTS

A. Submit under provisions of Division One.

B. Record actual locations of flexible pipe connectors, expansion joints, anchor, and guides.

1.6 OPERATION AND MAINTENANCE DATA

A. Submit under provisions of Division One.

B. Maintenance Data: Include adjustment instructions.

1.7 QUALIFICATIONS

A. Manufacturer: Company specializing in manufacturing the products specified in this section with minimum five years documented experience.

B. Design expansion compensation system under direct supervision of a Professional Engineer experienced in design of this work and licensed in the state where the project is located.

1.8 DELIVERY, STORAGE, AND HANDLING

A. Deliver, store, project and handle products to site under provisions of Division One.

B. Accept expansion joints on site in factory packing with shipping bars and positioning devices intact. Inspect for damage.

C. Protect equipment from exposure by leaving factory coverings, pipe end protection, and packaging in place until installation.

1.9 WARRANTY

A. Provide five year warranty under provisions of Division One.

B. Warranty: Include coverage for leak free performance of packed expansion joints.

1.10 EXTRA MATERIALS

A. Furnish under provisions of Division One.

PART 2 - PRODUCTS

2.1 FLEXIBLE PIPE CONNECTORS

A. Steel Piping (Based on 2" Pipe):

1. Manufacturers:
   a. Amber/Booth Metal-Flex, Model Type SS-PM or FW
   b. Triplex, Model Flexonics Series 400M
   c. Mercer Rubber Company, Model BSS-EM (Mason Industries)
2. Inner Hose: Type 321, stainless steel, corrugated metal.
3. Exterior Sleeve: Type 321, single braided stainless steel.
4. Pressure Rating: 350 psig WOG and 70 degrees F. For 4 inch pipe - 200 psig WOG and 70 degrees F.
5. Joint: Schedule 40 steel, threaded with male nipple and hex boss each end and Union. Flanged joints for pipe sizes 2½ inch and larger.
6. Size: Use pipe sized units.
7. Maximum offset: 1/2 inch on each side of installed center line.
8. Application: Air handling units cooling and heating coils.

B. Copper Piping (Based on 2" Pipe):

1. Manufacturers:
   a. Amber/Booth Metal-Flex, Model Type BR-SM
   b. Triplex, Model Flexonics Series 300
   c. Mercer Rubber Company, Type BFF (Mason Industries)
2. Inner Hose: Corrugated Bronze
3. Exterior Sleeve: Braided bronze.
4. Pressure Rating: 250 psig WOG and 70 degrees F.
5. Joint: Threaded with male nipple and hex boss each end with Union. Flanged joints for pipe sizes 2½ inch and larger.
6. Size: Use pipe sized units.
7. Maximum offset: 1/2 inch on each side of installed center line.
8. Application: Air handling units cooling and heating coils.

2.2 EXPANSION JOINTS

A. Bellows Type (Based on 4" Pipe):

1. Manufacturers:
   a. Amber/Booth, Style EB
   b. Triplex, Model Resistoflex R6905
   c. Mercer Rubber Company, Style 803 or 805 (Mason Industries)
2. Body: Monel wire reinforced molded TFE teflon bellows, multiple arch.
3. Pressure Rating: 70 psig WSP and 250 degrees F (66 degrees C).
4. Maximum Compression: 1 inch.
5. Maximum Extension: 1 inch.
6. Maximum Offset: 1/2 inch.
7. Joint: ASA standard ductile iron flanges, integral molded gasket.
8. Size: Use pipe sized units.
9. Accessories: Control rod limit bolts.
10. Application: Steel piping 8 inch and under.

2.3 ACCESSORIES

A. Pipe Alignment Guides to Direct Axial Movement:

1. Manufacturers:
   a. Triplex, Model Flexonics
   b. Metraflex, Style II
2. Two piece welded steel with shop paint, bolted, with spider to fit standard pipe, frame with four mounting holes, clearance for minimum 1 inch thick insulation, minimum 3 inch travel.

PART 3 - EXECUTION

3.1 INSTALLATION

A. Install in accordance with manufacturer's instructions.

B. Construct spool pieces to exact size of flexible connection for future insertion.

C. Install flexible pipe connectors on pipes connected to equipment supported by vibration isolation. Provided line size flexible connectors.

D. Install flexible connectors at right angles to displacement. Install one end immediately

adjacent to isolated equipment and anchor other end. Install in horizontal plane unless indicated otherwise.

E. Provide miscellaneous metals to rigidly anchor pipe to building structure. Provide pipe guides so that movement takes place along axis of pipe only. Erect piping such that strain and weight is not on cast connections or apparatus.

F. Provide support and equipment required to control expansion and contraction of piping. Provide loops, pipe offsets, and swing joints, or expansion joints where required.

3.2 MANUFACTURER'S FIELD SERVICES

A. Prepare and start systems under provisions of Division One.

B. Provide inspection services by flexible pipe manufacturer's representative for final installing and certify installation is in accordance with manufacturer's recommendations and connectors are performing satisfactorily.

END OF SECTION

SECTION 22 05 29 – HANGERS AND SUPPORT FOR PLUMBING PIPING AND EQUIPMENT

PART 1 - GENERAL

1.1 WORK INCLUDED

A. Pipe, and equipment hangers, supports, and associated anchors.

B. Sleeves and seals.

C. Flashing and sealing equipment and pipe stacks.

1.2 RELATED WORK

A. Section 22 02 00 – Basic Materials and Methods

B. Section 22 07 19 – Plumbing Piping Insulation

C. Section 22 10 00 - Plumbing Piping

1.3 REFERENCES

A. ANSI/ASME B31.1 - Power Piping.

1.4 QUALITY ASSURANCE

A. Supports for Sprinkler Piping: In conformance with NFPA 13.

B. Supports for Standpipes: In conformance with NFPA 14.

1.5 SUBMITTALS

A. Submit shop drawings and product data under provisions of Division One.

B. Indicate hanger and support framing and attachment methods.

PART 2 - PRODUCTS

2.1 PIPE HANGERS AND SUPPORTS

A. Hangers for Pipe Sizes 1/2 to 1-1/2 Inch Malleable iron, adjustable swivel, split ring.

B. Hangers for Pipe Sizes 2 to 4 Inches Carbon steel, adjustable, clevis.

C. Hangers for Pipe Sizes 6 Inches and Over: Adjustable steel yoke, cast iron roll, double hanger.

D. Multiple or Trapeze Hangers: Steel channels with welded spacers and hanger rods; cast iron roll and stand for pipe sizes 6 inches and over.

E. Wall Support for Pipe Sizes to 3 Inches: Cast iron hook.

F. Wall Support for Pipe Sizes 4 Inches and Over: adjustable steel yoke and cast iron roll.

G. Vertical Support: Steel riser clamp.

H. Floor Support for Pipe Sizes to 4 Inches: Cast iron adjustable pipe saddle, locknut nipple, floor flange, and concrete pier or steel support.

I. Floor Support for Pipe Sizes 6 Inches and Over: Adjustable cast iron roll and stand, steel screws, and concrete pier or steel support.

J. Roof Pipe Supports and Hangers: Galvanized Steel Channel System as manufactured by Portable Pipe Hangers, Inc. or approved equal.

For pipes 2-1/2" and smaller – Type PP10 with roller
For pipes 3" through 8" – Type PS
For multiple pipes – Type PSE - Custom

K. Copper Pipe Support and Hangers: Electro-galvanized with thermoplastic elastomer cushions; Unistrut "Cush-A-Clamp" or equal. Hangers: Plastic coated; Unistrut or equal.

L. For installation of protective shields refer to specification section 22 07 19 -3.3.

M. Shields for Vertical Copper Pipe Risers: Sheet lead.

N. Pipe Rough-In Supports in Walls/Chases: Provide preformed plastic pipe supports, Sioux Chief "Pipe Titan" hold rite or equal.

2.2 HANGER RODS

A. Galvanized Hanger Rods: Threaded both ends, threaded one end, or continuous threaded.

2.3 INSERTS

A. Inserts: Malleable iron case of galvanized steel shell and expander plug for threaded connection with lateral adjustment, top slot for reinforcing rods, lugs for attaching to forms; size inserts to suit threaded hanger rods.

2.4 FLASHING

A. Metal Flashing: 20 gage galvanized steel.

B. Lead Flashing: 4 lb./sq. ft. sheet lead for waterproofing; 1 lb./sq. ft. sheet lead for soundproofing.

C. Caps: Steel, 20 gage minimum; 16 gage at fire resistant elements.

D. Coordinate with roofing contractor/architect for type of flashing on metal roofs.

2.5 EQUIPMENT CURBS

A. Fabricate curbs of hot dipped galvanized steel.

2.6 SLEEVES

A. Sleeves for Pipes Through Non-fire Rated Floors: Form with 18 gage galvanized steel, tack welded to form a uniform sleeve.

B. Sleeves for Pipes Through Non-fire Rated Beams, Walls, Footings, and Potentially Wet Floors: Form with steel pipe, schedule 40.

C. Sleeves for Pipes Through Fire Rated and Fire Resistive Floors and Walls, and Fireproofing: Prefabricated fire rated steel sleeves including seals, UL listed.

D. Fire Stopping Insulation: Glass fiber type, non-combustible, U.L. listed.

E. Caulk: Paintable 25-year acrylic sealant.

F. Pipe Alignment Guides: Factory fabricated, of cast semi-steel or heavy fabricated steel, consisting of bolted, two-section outer cylinder and base with two-section guiding spider that bolts tightly to pipe. Length of guides shall be as recommended by manufacturer to allow indicated travel.

2.7 FABRICATION

A. Size sleeves large enough to allow for movement due to expansion and contraction. Provide for continuous insulation wrapping.

B. Design hangers without disengagement of supported pipe.

C. Design roof supports without roof penetrations, flashing or damage to the roofing material.

2.8 FINISH

A. Prime coat exposed steel hangers and supports. Hangers and supports located in crawl spaces, pipe shafts, and suspended ceiling spaces are not considered exposed.

PART 3 - EXECUTION

3.1 INSERTS

A. Provide inserts for suspending hangers from reinforced concrete slabs and sides of reinforced concrete beams. Coordinate with structural engineer for placement of inserts.

B. Provide hooked rod to concrete reinforcement section for inserts carrying pipe over 4 inches.

C. Where concrete slabs form finished ceiling, provide inserts to be flush with slab surface.

D. Where inserts are omitted, drill through concrete slab from below and provide thru-bolt with recessed square steel plate and nut recessed into and grouted flush with slab. Verify with structural engineer prior to start of work.

3.2 PIPE HANGERS AND SUPPORTS

A. Support horizontal piping as follows:

PIPE SIZE	MAX. HANGER SPACING	HANGER DIAMETER
(Steel Pipe)		
1/2 to 1-1/4 inch	7’-0”	3/8"
1-1/2 to 3 inch	10'-0"	3/8"
4 to 6 inch	10'-0"	1/2"
8 to 10 inch	10'-0"	5/8"
12 to 14 inch	10'-0"	3/4"
15 inch and over	10'-0"	7/8"

(Copper Pipe)		
1/2 to 1-1/4 inch	5'-0"	3/8"
1-1/2 to 2-1/2 inch	8'-0"	3/8"
3 to 4 inch	10'-0"	3/8"
6 to 8 inch	10'-0"	1/2"
(Cast Iron)		
2 to 3 inch	5'-0"	3/8"
4 to 6 inch	10'-0"	1/2"
8 to 10 inch	10'-0"	5/8"
12 to 14 inch	10'-0"	3/4"
15 inch and over	10'-0"	7/8"
(PVC Pipe)		
1-1/2 to 4 inch	4'-0"	3/8"
6 to 8 inch	4'-0"	1/2"
10 and over	4'-0"	5/8"

B. Install hangers to provide minimum 1/2 inch space between finished covering and adjacent work.

C. Place a hanger within 12 inches of each horizontal elbow and at the vertical horizontal transition.

D. Use hangers with 1-1/2 inch minimum vertical adjustment.

E. Support horizontal cast iron pipe adjacent to each hub, with 5 feet maximum spacing between hangers.

F. Support vertical piping at every floor. Support vertical cast iron pipe at each floor at hub.

G. Where several pipes can be installed in parallel and at same elevation, provide multiple or trapeze hangers.

H. Support riser piping independently of connected horizontal piping.

I. Install hangers with nut at base and above hanger; tighten upper nut to hanger after final installation adjustments.

J. Portable pipe hanger systems shall be installed per manufactures instructions.

3.3 Insulated Piping: Comply with the following installation requirements.

A. Clamps: Attach galvanized clamps, including spacers (if any), to piping with clamps projecting through insulation; do not exceed pipe stresses allowed by ASME B31.9.

B. Saddles: Install galvanized protection saddles MSS Type 39 where insulation without vapor barrier is indicated. Fill interior voids with segments of insulation that match adjoining pipe insulation.

C. Shields: Install protective shields MSS Type 40 on cold and chilled water piping that has vapor barrier. Shields shall span an arc of 180 degrees and shall have dimensions in inches not less than the following:

NPS	LENGTH	THICKNESS
1/4 THROUGH 3-1/2	12	0.048

4	12	0.060
5 & 6	18	0.060
8 THROUGH 14	24	0.075
16 THROUGH 24	24	0.105

D. Piping 2” and larger provide galvanized sheet metal shields with calcium silicate at hangers/supports.

E. Insert material shall be at least as long as the protective shield.

F. Thermal Hanger Shields: Install where indicated, with insulation of same thickness as piping.

3.4 EQUIPMENT BASES AND SUPPORTS

A. Provide equipment bases of concrete.

B. Provide templates, anchor bolts, and accessories for mounting and anchoring equipment.

C. Construct support of steel members. Brace and fasten with flanges bolted to structure.

D. Provide rigid anchors for pipes after vibration isolation components are installed.

3.5 FLASHING

A. Provide flexible flashing and metal counter flashing where piping and ductwork penetrate weather or waterproofed walls, floors, and roofs.

B. Flash vent and soil pipes projecting 8 inches minimum above finished roof surface with lead worked one inch minimum into hub, 8 inches minimum clear on sides with 24 x 24 inches sheet size. For pipes through outside walls, turn flanges back into wall and caulk, metal counter flash and seal.

C. Flash floor drains in floors with topping over finished areas with lead, 10 inches clear on sides with minimum 36 x 36 inch sheet size. Fasten flashing to drain clamp device.

D. Seal floor shower mop sink and all other drains watertight to adjacent materials.

E. Provide curbs for mechanical roof installations 8 inches minimum high above roofing surface. Contact architect for all flashing details and roof construction. Seal penetrations watertight.

3.6 SLEEVES

A. Set sleeves in position in formwork. Provide reinforcing around sleeves.

B. Extend sleeves through floors minimum one inch above finished floor level. Caulk sleeves full depth with fire rated thermfiber and 3M caulking and provide floor plate.

C. Where piping penetrates floor, ceiling, or wall, close off space between pipe and adjacent work with U.L. listed fire stopping insulation and caulk seal air tight. Provide close fitting metal collar or escutcheon covers at both sides of penetration.

END OF SECTION

SECTION 22 05 48 – VIBRATION AND SEISMIC CONTROLS FOR PLUMBING PIPING

PART 1 - GENERAL

1.1 WORK INCLUDED

A. Vibration and sound control products.

1.2 RELATED DOCUMENTS

A. Drawings and general provisions of Contract including General and Supplementary Conditions and Division One specification sections, apply to work of this section

B. This section is Division-22 Basic Materials and Methods section, and is part of each Division-22 section making reference to vibration control products specified herein.

1.3 QUALITY ASSURANCE

A. Manufacturer's Qualifications: Firms regularly engaged in manufacture of vibration control products, of type, size, and capacity required, whose products have been in satisfactory use in similar service for not less than 5 years.

B. Vibration and sound control products shall conform to ASHRAE criteria for average noise criteria curves for all equipment at full load conditions.

C. Except as otherwise indicated, sound and vibration control products shall be provided by a single manufacturer.

1.4 SUBMITTALS

A. SHOP DRAWINGS: Indicate size, material, and finish. Show locations and installation procedures. Include details of joints, attachments, and clearances.

B. PRODUCT DATA: Submit schedules, charts, literature, and illustrations to indicate the performance, fabrication procedures, product variations, and accessories.

PART 2 - PRODUCTS

2.1 ACCEPTABLE MANUFACTURERS

A. Amber/Booth Company, Inc.

B. Mason Industries, Inc.

C. Noise Control, Inc.

2.2 GENERAL

A. Provide vibration isolation supports for equipment, piping and ductwork, to prevent transmission of vibration and noise to the building structures that may cause discomfort to the occupants.

B. Model numbers of Amber/Booth products are included for identification. Products of the additional manufacturers will be acceptable provided they comply with all of the requirements of this specification.

2.3 BASE MOUNTED PUMPS

A. Amber/Booth type SP-NR style E flexplate pad isolators consisting of two layers of 3/8'' thick alternate ribbed neoprene pad bonded to a 16 gage galvanized steel separator plate.

B. Pads shall be sized for approximately 40 PSI loading and 1/8'' deflection.

2.4 PIPING

A. Furnish line size flexible connectors at supply and return of pumps, amber/booth style 2800 single sphere EPDM construction, connector shall include 150 lb. cadmium plated carbon steel floating flanges.

2.5 CORROSION PROTECTION

A. All vibration isolators shall be designed and treated for resistance to corrosion.

B. Steel components: PVC coated or phosphated and painted with industrial grade enamel. Nuts, bolts, and washers: zinc-electroplated.

PART 3 - EXECUTION

3.1 All equipment shall be installed in accordance with the manufacturers recommendations and printed installation instructions.

3.2 All items required for a complete and proper installation are not necessarily indicated on the plans or in the specifications. Provide all items required as per manufacturers requirements.

3.3 The vibration isolation supplier shall certify in writing that he has inspected the installation and that all external isolation materials and devices are installed correctly and functioning properly.

END OF SECTION

SECTION 22 05 53 – IDENTIFICATION FOR PLUMBING PIPING AND EQUIPMENT

PART 1 - GENERAL

1.1 GENERAL REQUIREMENTS

A. The requirements of the General Conditions and Supplementary Conditions apply to all work herein.

B. The Basic Materials and Methods, Section 22 02 00, are included as a part of this Section as though written in full in this document.

1.2 SCOPE

A. The scope of the work shall include the furnishing and complete installation of the items covered by this Section, with all appurtenances, ready for owner's use.

B. Refer to Architectural Sections for any additional requirements.

1.3 RELATED WORK

A. Section 22 10 00 – Plumbing Piping

B. Section 22 07 19 – Plumbing Piping Insulation

1.4 REFERENCES

A. ANSI/ASME A13.1 – 2015 – Scheme for the Identification of Piping Systems

PART 2 - PRODUCTS

2.1 VALVE AND PIPE IDENTIFICATION

A. Valves:

1. All valves shall be identified with a 1-1/2" diameter brass disc wired onto the handle. The disc shall be stamped with 1/2" high depressed black filled identifying numbers. These numbers shall be numerically sequenced for all valves on the job.
2. The number and description indicating make, size, model number and service of each valve shall be listed in proper operational sequence, properly typewritten. Three copies to be turned over to Owner at completion.
3. Tags shall be fastened with approved meter seal and 4 ply 0.018 smooth copper wire. Tags and fastenings shall be manufactured by the Seton Nameplate Corporation or approved equal.
4. All valves shall be numbered serially with all valves of any one system and/or trade grouped together.

B. Pipe Marking:

1. All interior visible piping located in accessible spaces shall be provided with pipe markers. Accessible spaces shall include, but not necessarily be limited to, the following: above accessible ceilings, inside equipment rooms and utility spaces, in attic spaces, in crawl spaces, and in chase spaces, etc. viewable via access panels.
2. All exterior visible piping shall be provided with pipe markers.

3. Peel-off, self-adhesive, sticker type labels shall not be acceptable.
4. Pipe markers shall be manufactured with rigid vinyl PVC, printed with UV resistant ink, abrasion and chemical resistant, suited for indoor or outdoor use and for a service temperature of -40 degrees F to 160 degrees F.
   a. For pipes up to 6" provide cylindrically pre-coiled markers that snap into place without the need for tape or adhesives.
   b. For pipes 6" and larger provide flat snap-around markers installed using manufacturer's heavy-duty nylon ties or stainless steel strapping.
   c. Markers shall indicate the pipe service, include flow directional arrows, and meet ANSI/ASME A13.1-2015.
5. Acceptable manufacturers:
   a. Seton Setmark Pipe Markers
   b. Brimar Industries Pipemarker System 1 Pipe Markers
   c. Brady Corporation
6. Markers shall be provided after final insulating, painting, jacketing, etc. of piping and per manufacturer's installation instructions. Strapping (applies to large diameter markers only) shall be snug but shall not compromise any insulation. All such strapping shall also be cleanly trimmed of excess material.
7. Markers shall be provided in accordance with ANSI/ASME A13.1-2015 requirements. **Specific items indicated below are not intended as a substitute for this complete standard**. Markers shall be provided:
   a. On both sides of each floor or wall penetration.
   b. On each side of each tee.
   c. On each side of each valve and/or valve group.
   d. On each side of each piece of equipment.
   e. On straight pipe runs at equally spaced intervals not to exceed 50 feet.
   f. In congested areas, on each pipe at the point it enters and exits the area.
   g. At the point of connection to each piece of equipment and automatic control valve.
   h. Where they are readily visible to personnel from the point of normal approach.
   i. With letter height and length of color field according to the size of the pipe served.
   j. For **non-potable water** not less than once per room and at equally spaced intervals not to exceed 20 feet.
8. Color scheme of markers shall be as indicated below and otherwise in accordance with ANSI/ASME color recommendations. Legend color indicates color of legend text and flow directional arrow:

SYSTEM	LABEL COLOR	LEGEND	LEGEND COLOR
Sanitary Sewer	Green	Sanitary Sewer	White
	Green	Plumbing Vent	White
Storm Drain	Green	Storm Drain	White
	Green	Overflow	White
Domestic Water	Green	Domestic Cold Water	White
Domestic Hot Water	Green	Domestic Hot Water	White
Domestic Hot Water Return	Green	Domestic Hot Water Return	White
Fire Protection	Red	Fire Protection	White
	Red	Fire Sprinkler	White
Fuel Gas	Yellow	Natural Gas	Black
	Yellow	Propane Gas	Black
Diesel	Yellow	Diesel Oil	Black
Compressed Air	Blue	Compressed Air	White
Nitrogen	Orange	Nitrogen	Black

Carbon Dioxide	Orange	Carbon Dioxide	Black
Non-Potable Water	Yellow	Caution: Non-Potable Water, Do Not Drink	Black
Deionized Water	Green	Deionized Water	White
Reverse Osmosis Water	Green	R.O. Water	White
Acid Waste	Orange	Acid Waste	Black
		Acid Vent	Black

C. Pipe Painting:

1. All piping exposed to view shall be painted as indicated or as directed by the Architect in the field. Confirm all color selections with Architect prior to installation.
2. The entire fire protection piping system shall be painted red.
3. All piping located in mechanical rooms and exterior piping shall be painted as indicated below:

System	Color
Storm Sewer	White
Sanitary Sewer Waste and Vent	Light Gray
Domestic Cold Water	Dark Blue
Domestic Hot Water Supply and Return	Orange

PART 3 - EXECUTION

A. All labeling equipment shall be installed per manufacturer's printed installation instructions.

B. All items required for a complete and proper installation are not necessarily indicated on the plans or in the specifications. Contractor's price shall include all items as required per manufacturers' requirements.

C. All piping shall be cleaned of rust, dirt, oil and all other contaminants prior to painting. Install primer and a quality latex paint over all surfaces of pipe.

END OF SECTION

SECTION 22 07 19 – PLUMBING PIPING INSULATION

PART 1 - GENERAL

1.1 GENERAL REQUIREMENTS

A. The requirements of the General Conditions and Supplementary Conditions apply to all work herein.

B. The Basic Materials and Methods, Section 22 02 00, are included as a part of this Section as though written in full in this document.

1.2 SCOPE

A. Scope of the Work shall include the furnishing and complete installation of the equipment covered by this Section, with all auxiliaries, ready for owner's use.

B. Furnish and install piping insulation to:

1. Interior domestic hot water and hot water return piping.
2. Interior domestic cold water piping located in exterior walls and to a point no less than 8'-0" inside the building.
3. Exterior domestic cold water piping.
4. Drain bodies and associated piping.
5. Condensate drainage piping.
6. All pipes subject to freezing conditions shall be insulated.

C. Work specified elsewhere.

1. Painting.
2. Pipe hangers and supports.

D. For insulation purposes, piping is defined as the complete piping system including supplies and returns, pipes, valves, automatic control valve bodies, fittings, flanges, strainers, thermometer wells, unions, pressure reducing stations, and orifice assemblies.

1.3 WARRANTY

A. Warrant the Work specified herein for one year against becoming unserviceable or causing an objectionable appearance resulting from either defective or nonconforming materials or workmanship.

B. Defects shall include, but not be limited to, the following:

1. Mildewing.
2. Peeling, cracking, and blistering.
3. Condensation on exterior surfaces.

1.4 SUBMITTALS

A. SHOP DRAWINGS: Indicate size, material, and finish. Show locations and installation procedures. Include details of joints, attachments, and clearances.

B. PRODUCT DATA: Submit schedules, charts, literature, and illustrations to indicate the performance, fabrication procedures, project variations, and accessories.

1.5 DELIVERY AND STORAGE

A. DELIVERY: Deliver undamaged materials in the manufacturer's unopened containers. Containers shall be clearly labeled with the insulation's flame and smoke ratings.

PART 2 - PRODUCTS

2.1 It is the intent of these specifications to secure superior quality workmanship resulting in an absolutely satisfactory installation of insulation from the standpoint of both function and appearance. Particular attention shall be given to valves, fittings, pumps, etc., requiring low temperature insulation to insure full thickness of insulation and proper application of the vapor seal. All flaps of vapor barrier jackets and/or canvas covering must be neatly and securely smoothed and sealed down.

2.2 The type of insulation and its installation shall be in strict accordance with these specifications for each service, and the application technique shall be as recommended by the manufacturer. All insulation types, together with adhesives and finishes shall be submitted and approved prior to installation.

2.3 A sample quantity of each type of insulation and each type application shall be installed and approval secured prior to proceeding with the main body of the work. Condensation caused by improper installation of insulation shall be corrected by Installing Contractor. Any damage caused by condensation shall be made good at no cost to the Owner or Architect/Engineer.

2.4 All insulation shall have composite (insulation, jacket or facing, and adhesive used to adhere the facing or jacket to insulation) fire and smoke hazard as tested by Procedure ASTM E084, NFPA 255 and UL 723 not exceeding:

Flame Spread 25
Smoke Developed 50

2.5 Accessories, such as adhesives, mastics and cements shall have the same component ratings as listed above.

2.6 All products or their shipping cartons shall have a label affixed, indicating flame and smoke ratings do not exceed the above requirements.

2.7 APPROVED MANUFACTURERS

A. Calcium silicate materials shall be as manufactured by Johns Manville.

B. Glass fiber materials shall be as manufactured by Johns Manville or Owens-Corning and shall have the same thermal properties, density, fire rating, vapor barrier, etc., as the types specified herein, subject to review by the Engineer.

C. Adhesives shall be as manufactured by Childers, Foster, HB Fuller or Armstrong, and shall have the same adhesive properties, fire rating, vapor seal, etc., as the types specified herein, subject to review by the Engineer.

D. Armaflex elastomeric cellular thermal insulation by Armstrong.

E. Phenolic foam insulation shall be as manufactured by Kooltherm Insulation (Koolphen).

F. Metal jacketing and fitting covers shall be as manufactured by Childers or RPR Products, Inc.

2.8 MATERIALS

A. INTERIOR DOMESTIC WATER PIPE: provide fiberglass pipe insulation with all service jackets with self sealing lap joint.

B. EXTERIOR DOMESTIC WATER PIPE: Provide elastomeric cellular thermal, or preformed phenolic foam pipe insulation with secured aluminum jacketing.

C. DRAIN BODIES AND DOWNSPOUTS: Insulate underside of roof and overflow drain bodies, associated horizontal piping, including first turn down to vertical conductor. Insulate chilled water waste lines from drinking fountain to junction with main waste stacks. Insulate branch lines including traps and exposed underside of floor drains receiving cooling coil condensate, same as water piping where exposed to building occupant view. When concealed, insulation may be same as specified for external duct wrap.

D. CONDENSATE DRAINAGE PIPING: Fire resistant fiberglass insulation; insulation not required when piping is exposed on roof.

E. ALUMINUM OR STAINLESS STEEL JACKETING: Utilize strap-on type jacketing, banding, and accessories. Provide pre-formed fitting covers for all elbows and tees.

PART 3 - EXECUTION

3.1 All insulation shall be installed in accordance with the manufacturers' recommendations and printed installation instructions, including high density inserts at all hangers and pipe supports to prevent compression of insulation.

3.2 All items required for a complete and proper installation are not necessarily indicated on the plans or in the specifications. Provide all items required as per manufacturers requirements.

3.3 Pipes located outdoors or in tunnels shall be insulated same as concealed piping; and in addition shall have a jacket of 0.016 inch thick, smooth aluminum with longitudinal modified Pittsburg Z-Lock seam and 2 inch overlap. Jacketing shall be easily removed and replaced without damage. All butt joints shall be sealed with gray silicone. Galvanized banding is not acceptable.

3.4 All insulated piping located over driveways shall have an aluminum shield permanently banded over insulation to protect it from damage from car antennas.

3.5 WATER PIPE INSULATION INSTALLATION

A. The insulation shall be applied to clean, dry pipes with all joints firmly butted together. Where piping is interrupted by fittings, flanges, valves or hangers and at intervals not to exceed 25 feet on straight runs, an isolating seal shall be formed between the vapor barrier jacket and the bare pipe. The seal shall be by the applications of adhesive to the exposed insulation joint faces, carried continuously down to and along 4 inches of pipe and up to and along 2 inches of jacket.

B. Pipe fittings and valves shall be insulated with pre-molded or shop fabricated glass fiber covers finished with two brush coats of vapor barrier mastic reinforced with glass fabric.

C. All under lap surfaces shall be clean and free of dust, etc. before the SSL is sealed. These laps shall be firmly rubbed to insure a positive seal. A brush coat of vapor retarder shall be applied to all edges of the vapor barrier jacket.

D. At hangers and supports, provide a high density foam insulation insert that extends 2"

beyond the shield on each side and a protective shield/saddle to prevent compression/damage. Secure shield/saddle to insulation using mastic or strapping tape.

3.6 FIRE RATED INSULATION

A. All pipe penetrations through walls and concrete floors shall be fire rated by applying USG Thermafiber in the space between the concrete and the pipe.

B. The fire rating shall be additionally sealed by using 3M brand model CP 25 or 303 fire barrier caulk and putty.

C. All fire rating material shall be insulated in accordance with manufacturer's printed instructions.

PART 4 - SCHEDULES

4.1 LOW TEMPERATURE SURFACES		MINIMUM INSULATION THICKNESS BASED ON FIBERGLASS
A.	Exposed exterior domestic water pipe:	1½ inch
B.	Interior domestic cold water pipe:	1 inch
C.	Condensate drain lines:	¾ inch
D.	Drains receiving condensate:	1 inch
E.	Concealed piping from roof drains:	1½ inch blanket wrap
F.	Exposed piping from roof drains:	1 inch thick rigid with all service jacket

4.2 HIGH TEMPERATURE SURFACES		MINIMUM INSULATION THICKNESS
A.	Domestic Hot Water and Domestic Hot Water Return Piping	
1.	Pipe sizes 1-1/4 inch and smaller with Operating temperatures of 140°F or less	1 inch
2.	Pipe sizes 1-1/2 inch and larger with Operating temperatures of 140°F or less	1-1/2 inch
3.	Pipe sizes 1-1/4 inch and smaller with Operating temperatures greater than 140°F	1-1/2 inch
4.	Pipe sizes 1-1/2 inch and larger with Operating temperatures greater than 140°F	2 inch

END OF SECTION

SECTION 22 08 00 – COMMISSIONING OF PLUMBING SYSTEMS

PART 1 – GENERAL

1.1 RELATED DOCUMENTS

A. Drawings and general provisions of the Contract Documents, including General and Supplementary Conditions and Division 01 Specifications, apply to this section.

B. Related SECTIONS:

1. SECTION 01 91 00 - GENERAL COMMISSIONING REQUIREMENTS
2. SECTION 23 09 63 - ENERGY MANAGEMENT AND CONTROL SYSTEMS.

1.2 SUMMARY

A. The commissioning of the plumbing system and associated controls shall be performed by an impartial technical firm hired by the owner. The commissioning provider shall be certified under one or more of the following certifications:

1. CxA – Certified Commissioning Authority – ACG
2. CBCP – Certified Building Commissioning Professional – AEE
3. CCP – Certified Commissioning Professional – BCA
4. CPMP – Certified Process Management Professional – ASHRAE
5. BSC – Building System Commissioning Certification – NEBB

B. The commissioning provider (Commissioning authority) shall be responsible for leading the entire construction team through the commissioning process including, but not limited to, conducting the commissioning kick-off meeting, preparing the commissioning plan, preparing pre-functional checklists, preparing functional test scripts, participation in functional testing and preparation of required documentation and reports.

1.3 RESPONIBILITIES

A. Contractor: Responsibilities of the Contractor as related to the Commissioning Process include, but are not limited to the following:

1. Facilitate coordination of Commissioning work by Commissioning authority.
2. Attend Commissioning meetings or other meetings called by Commissioning authority to facilitate the Commissioning Process.
3. Review Functional Performance Test procedures for feasibility, safety, and impact on warranty, and provide Commissioning authority with written comment on same.
4. Provide all documentation relating to manufacturer's recommended performance testing of equipment and systems.
5. Provide Operations & Maintenance data to Commissioning authority for preparation of checklists and training manuals.
6. Provide As-built drawings and documentation to facilitate Testing.
7. Assure and facilitate participation and cooperation of Sub Contractors and equipment suppliers as required for the Commissioning Process.
8. Certify to Commissioning authority that installation work listed in Pre-Functional

Checklists has been completed.

9. Install systems and equipment in strict conformance with project specifications, manufacturer's recommended installation procedures, and Pre-Functional Checklists.
10. Provide data concerning performance, installation, and start-up of systems.
11. Provide copy of manufacturers filled-out start-up forms for equipment and systems.
12. Ensure systems have been started and fully checked for proper operation prior to arranging for Testing with Commissioning authority. Prepare and submit to Commissioning authority written certification that each piece of equipment and/or system has been started according to manufacturer's recommended procedure, and that system has been tested for compliance with operational requirements.
    a. Contractor shall carry out manufacturer's recommended start-up and testing procedures, regardless of whether or not they are specifically listed in Pre-Functional Checklists.
    b. Contractor is not relieved of obligation for systems/equipment demonstration where performance testing is required by specifications, but a Functional Performance Test is not specifically designated by Commissioning authority.
13. Coordinate with Commissioning authority to determine mutually acceptable date of Functional Performance Tests.
14. Provide qualified personnel to assist and participate in Commissioning.
15. Provide test instruments and communications devices, as prescribed by Commissioning authority, required for carrying out Testing of systems.
16. Proprietary test equipment required by the manufacturer, whether specified or not, shall be provided by the manufacturer of the equipment. Manufacturer shall provide the test equipment, demonstrate its use, and assist in the commissioning process. Proprietary test equipment shall become the property of the Owner upon completion of commissioning.
17. Ensure deficiencies found in the Commissioning Issues Log are corrected within the time schedule shown in the Commissioning Plan.
18. Provide Commissioning authority with all submittals, start-up instructions manuals, operating parameters, and other pertinent information related to Commissioning Process. This information shall be routed through Architect.
19. Prepare and submit to Commissioning authority proposed Training Program outline for each system.
20. Coordinate and provide training of Owner's personnel.
21. Prepare Operation & Maintenance Manuals and As-Built drawings in accordance with specifications; submit copy to Commissioning authority in addition to other contractually required submissions. Revise and resubmit manuals in accordance with Design Professionals and Commissioning authority comments.
22. Commissioning requires participation of this Division Subcontractors to ensure that systems are operating in manner consistent with Contract Documents. All costs associated with the participation of Contractor, Sub-Contractors, Design Professionals, and Equipment Vendors in the Commissioning Process shall be included as part of the Construction Contract.

B. Subcontractors and vendors shall prepare and submit to Commissioning authority proposed Startup procedures to demonstrate proper installation of systems, according to these specifications and checklists prepared by Commissioning authority

1.4 COMMISSIONING PLAN

A. Commissioning Process tasks and activities:

1. Commissioning kick-off meeting: Conducted by commissioning authority and attended by construction team and design team.
2. Pre-functional checklists: Prepared by the commissioning authority and filled out by subcontractors performing the work that is applicable.
3. Site visits to review installation of applicable systems and progress of checklist documentation performed and reported by commissioning authority.
4. Functional testing: Commissioning authority shall conduct functional testing with assistance of applicable subcontractors and document successful results as well as deficiencies (issues). Functional performance testing shall demonstrate the installation and operation of components, systems, and system-to-system interfacing in accordance with plans and specifications. Testing shall include all modes and sequence of operation, including under full-load, part-load and emergency conditions (including all alarms). Controls system shall be tested to document that control devices, components, equipment and systems are calibrated and adjusted and operate in accordance with the plans and specifications. Sequences shall be functionally tested to document they operate in accordance with plans and specifications.
5. Preliminary commissioning report: Commissioning authority shall issue a preliminary commissioning report to the owner that has results of the first round of functional testing including deficiencies discovered.
6. Systems manual: Commissioning authority shall compile the systems manual using submittal data provided by the general contractor and applicable subcontractors.
7. Final commissioning report: Commissioning authority shall issue final commissioning report documenting the entire process and final results of functional testing. Report shall include final testing and balancing report.

B. Equipment to be tested

1. Energy Management and Control System interface with applicable plumbing system equipment.
2. Service water heating systems (100%).
3. Service water circulation equipment (100%).
4. Domestic water booster pumps (100%).

C. Testing functions and conditions

1. Verify shutdown of systems when scheduled.
2. Calibration of sensors
3. Confirm functionality of all specified sequences of operations.
4. Verify the functionality of all alarms.

D. Performance criteria

1. Water temperatures shall be within tolerances specified in the contract documents.
2. Water heating system “recovery” rates shall be within specified time frame.

3. Booster pump shall maintain system pressure within specified tolerance.

PART 2 – PRODUCTS

2.1 NO PRODUCTS SUPPLIED

PART 3 – EXECUTION

3.1 GENERAL

A. This Division has startup responsibilities and are required to complete sub-systems so COMPLETE SYSTEMS are fully functional. Insuring they meet design requirements of Contract Documents. Commissioning procedures and testing do not relieve or lessen this responsibility or shift this responsibility, in whole or in part, to Commissioning Agent or Owner.

B. Coordinate with other Sub-Contractors and equipment vendors to set aside adequate time to address Pre-Functional Checklists, Functional Performance Tests, Operations & Maintenance Manual creation, Owner Training, and associated coordination meetings.

C. Commissioning authority will also conduct site inspections at critical times and issue Cx Field Reports with observations on installation deficiencies so that they may be issued by Architect as deemed appropriate.

3.2 WORK PRIOR TO COMMSSIONING

A. Complete all phases of the work so the systems can be started, adjusted, balanced, tested, and otherwise tested.

B. See pertinent specification sections in this Division, which outline responsibilities for start-up of equipment with obligations to complete systems, including all sub-systems so that they are fully functional.

C. Assist commissioning authority with all information pertaining to actual equipment and installation as required complete the full commissioning scope.

D. Contractor shall prepare startup procedures to demonstrate compliance with pre-functional checklists, and coordinate scheduling for completion of these checklists.

E. A minimum of 7 days prior to date of system startup, submit to Commissioning authority for review, detailed description of equipment start-up procedures which contractor proposes to perform to demonstrate conformance of systems to specifications and Checklists.

3.3 PARTICIPATION IN COMMISSIONING

A. Attend meetings related to the Commissioning Process; arrange for attendance by personnel and vendors directly involved in the project, prior to testing of their systems.

B. Provide skilled technicians to startup and test all systems, and place systems in complete and fully functioning service in accordance with Contract Documents.

C. Provide skilled technicians, experienced and familiar with systems being commissioned, to assist Commissioning authority in commissioning process.

3.4 WORK TO RESOLVE DEFICIENCIES

A. Complete corrective work in a timely manner to allow expeditious completion of Commissioning Process. If deadlines pass without resolution of identified problems, Owner reserves the right to obtain supplementary services and/or equipment to resolve the problem. Costs thus incurred will be Contractor's responsibility.

3.5 PRE-FUNCTIONAL CHECKLISTS (PFC)

A. Contractor shall complete Pre-Functional Checklists to validate compliance with Contract Documents installation and start-up requirements, for this Division's systems.

B. Refer to commissioning plan for detailed list of equipment to be commissioned.

3.6 FUNCTIONAL PERFORMANCE TESTING (FPT)

A. Contractor, in cooperation with Commissioning Agent, shall conduct Functional Performance Testing to validate compliance with Contract Documents.

B. Refer to commissioning plan for detailed list of equipment to be commissioned.

C. Assist Commissioning authority in Functional Testing by removing equipment covers, opening access panels, etc. Furnish ladders, flashlights, meters, gauges, or other inspection equipment as necessary.

3.7 TRAINING

A. The following requirements are in addition to Operations & Maintenance requirements specified elsewhere in this specifications manual.

B. Contractor shall be responsible for training coordination and scheduling, and ultimately to ensure that training is completed.

C. The training agenda (plan) shall include, at a minimum, the following elements:

1. Purpose of equipment.
2. Principle of how the equipment works.
3. Important parts and assemblies.
4. How the equipment achieves its purpose and necessary operating conditions.
5. Most likely failure modes, causes and corrections.
6. On site demonstration.

D. Commissioning authority shall be responsible for overseeing and approving content and adequacy of training of Owner personnel for all installed systems. Provide Commissioning authority with training plan two weeks before planned training.

3.8 OPERATIONS & MAINTENANCE MANUALS

A. The following requirements are in addition to Operations & Maintenance requirements specified elsewhere in this specifications manual.

B. Sub-Contractor shall compile and prepare documentation for equipment and systems specified in this Division, and shall deliver documentation to Contractor for inclusion in Operation & Maintenance Manuals, in accordance with requirements of Division 01, prior to training Owner personnel.

C. Provide Commissioning authority with a single, electronic copy of Operation & Maintenance Manuals for review. Commissioning authority copy of O&M manuals shall be submitted through Architect.

D. Operation and maintenance manuals shall include, service agency contact information, maintenance requirements, controls system settings and a narrative of how each system is intended to operate, including set points.

3.9 DOCUMENTATION

A. Commissioning authority shall provide documentation of process as follows:

1. Preliminary commissioning report including test procedures, results of testing, itemization of deficiencies, deferred tests and climatic conditions required for performance of deferred tests. Preliminary commissioning report shall be issued to owner to demonstrate the first pass of testing has occurred and to demonstrate compliance with applicable codes.

2. Final commissioning report shall include the final test and balance report, final results of functional testing, disposition of deficiencies discovered during testing, including the details of corrective measures used and functional testing procedures used for repeatability of testing in the future.

END OF SECTION

SECTION 22 10 00 - PLUMBING PIPING

PART 1 - GENERAL

1.1 GENERAL REQUIREMENTS

A. The requirements of the General Conditions and Supplementary Conditions apply to all work herein.

B. The Basic Materials and Methods, Section 22 02 00, are included as a part of this Section as though written in full in this document.

1.2 SCOPE

A. The scope of the work shall include the furnishing and complete installation of the piping covered by this Section, with all appurtenances, ready for the Owner's use.

B. Include the following work in addition to items normally part of this Section:

1. Pipe and pipe fittings:

a. Sanitary drainage piping system.

b. Domestic water piping system.

2. Adapters, Transitions, Unions, Couplings, Flanges, Connectors

3. Valves

4. Excavation, Bedding, and Backfill

1.3 RELATED WORK

A. Section 22 05 29 – Hangers and Support for Plumbing Piping and Equipment.

B. Section 22 05 48 – Vibration and Seismic Controls for Plumbing Piping.

C. Section 22 05 53 – Identification for Plumbing Piping and Equipment.

D. Section 22 07 19 – Plumbing Piping Insulation.

E. Section 22 11 16 – Domestic Water Piping – Cross-Linked Polyethylene (PEX)

F. Section 22 11 19 – Plumbing Specialties.

G. Section 22 30 00 – Plumbing Equipment.

H. Section 22 40 00 – Plumbing Fixtures.

1.4 REFERENCES

A. ASME – Boiler and Pressure Vessel Code.

B. ASME Section IX – Welding and Brazing Qualifications.

C. ASME B1.20.1 – Pipe Threads, General Purpose.

D. ASME B16.1 – Gray Iron Pipe Flanges and Flanged Fittings: Classes 25, 125, and 250.

E. ASME B16.3 - Malleable Iron Threaded Fittings: Classes 150 and 300.

F. ASME B16.4 – Gray Iron Threaded Fittings: Classes 125 and 250.

G. ASME B16.5 – Pipe Flanges and Flanged Fittings: NPS 1/2 through NPS 24 Metric/Inch Standard.

H. ASME B16.9 – Factory-Made Wrought Buttwelding Fittings

I. ASME B16.14 – Ferrous Pipe Plugs, Bushings, and Locknuts with Pipe Threads.

J. ASME B16.22 - Wrought Copper and Copper Alloy Solder-Joint Pressure Fittings.

K. ASME B16.23 – Cast Copper Alloy Solder Joint Drainage Fittings: DWV.

L. ASME B16.51 – Copper and Copper Alloy Press-Connect Pressure Fittings.

M. ASME B31.3 – Process Piping.

N. ASME B31.9 – Building Services Piping.

O. ASTM A47 – Standard Specification for Ferritic Malleable Iron Castings.

P. ASTM A53 – Standard Specification for Pipe, Steel, Black and Hot-Dipped, Zinc Coated, Welded and Seamless.

Q. ASTM A74 – Standard Specification for Cast Iron Soil Pipe and Fittings.

R. ASTM A126 – Standard Specification for Gray Iron Castings for Valves, Flanges, and Pipe Fittings.

S. ASTM A153 – Standard Specification for Zinc Coating (Hot-Dip) on Iron and Steel Hardware.

T. ASTM A197 – Standard Specification for Cupola Malleable Iron.

U. ASTM A312 – Standard Specification for Seamless, Welded, and Heavily Cold Worked Austenitic Stainless Steel Pipes

V. ASTM A395 – Standard Specification for Ferritic Ductile Iron Pressure-Retaining Castings for Use at Elevated Temperatures.

W. ASTM A403 – Standard Specification for Wrought Austenitic Stainless Steel Piping Fittings

X. ASTM A536 – Standard Specification for Ductile Iron Castings.

Y. ASTM A582 – Standard Specification for Free-Machining Stainless Steel Bars.

Z. ASTM B32 – Standard Specification for Solder Metal.

AA. ASTM B42 – Standard Specification for Seamless Copper Pipe, Standard Sizes.

BB. ASTM B43 – Standard Specification for Seamless Red Brass Pipe, Standard Sizes.

CC. ASTM B62 – Standard Specification for Composition Bronze or Ounce Metal Castings.

DD. ASTM B75 – Standard Specification for Seamless Copper Tube.

EE. ASTM B88 – Standard Specification for Seamless Copper Water Tube.

FF. ASTM B148 – Standard Specification for Aluminum-Bronze Sand Castings.

GG. ASTM B306 – Standard Specification for Copper Drainage Tube (DWV).

HH. ASTM B584 – Standard Specification for Copper Alloy Sand Castings for General Applications.

II. ASTM B828 – Standard Practice for Making Capillary Joints by Soldering of Copper and Copper Alloy Tube and Fittings.

JJ. ASTM C33/C33M – Standard Specification for Concrete Aggregates.

KK. ASTM C94 – Standard Specification for Ready-Mix Concrete.

LL. ASTM C150 – Standard Specification for Portland Cement.

MM. ASTM C564 – Standard Specification for Rubber Gaskets for Cast Iron Soil Pipe and Fittings.

NN. ASTM C1053 – Standard Specification for Borosilicate Glass Pipe and Fittings for Drain, Waste, and Vent (DWV) Applications.

OO. ASTM C1173 – Standard Specification for Flexible Transition Couplings for Underground Piping Systems.

PP. ASTM C1277 – Standard Specification for Shielded Couplings Joining Hubless Cast Iron Soil Pipe and Fittings.

QQ. ASTM C1540 – Standard Specification for Heavy Duty Shielded Couplings Joining Hubless Cast Iron Soil Pipe and Fittings.

RR. ASTM D635 – Standard Test Method for Rate of Burning and/or Extent and Time of Burning of Plastics in a Horizontal Position.

SS. ASTM D1784 – Standard Specification for Rigid Poly (Vinyl Chloride) (PVC) Compounds and Chlorinated Poly (Vinyl Chloride) (CPVC) Compounds.

TT. ASTM D1785 – Standard Specification for Poly (Vinyl Chloride) (PVC) Plastic Pipe, Schedules 40, 80, and 120.

UU. ASTM D2241 – Standard Specification for Poly (Vinyl Chloride) (PVC) Pressure-Rated Pipe (SDR Series).

VV. ASTM D2321 – Standard Practice for Underground Installation of Thermoplastic Pipe for Sewers and Other Gravity-Flow Applications.

WW. ASTM D2464 – Standard Specification for Threaded Poly (Vinyl Chloride) (PVC) Plastic Pipe Fittings, Schedule 80.

XX. ASTM D2466 – Standard Specification for Poly (Vinyl Chloride) (PVC) Plastic Pipe Fittings, Schedule 40.

YY. ASTM D2467 – Standard Specification for Poly (Vinyl Chloride) (PVC) Plastic Pipe Fittings, Schedule 80.

ZZ. ASTM D2564 – Standard Specification for Solvent Cements for Poly (Vinyl Chloride) (PVC) Plastic Piping Systems.

AAA. ASTM D2665 – Standard Specification for Poly (Vinyl Chloride) (PVC) Plastic Drain, Waste, and Vent Pipe and Fittings.

BBB. ASTM D2672 – Standard Specification for Joints for IPS PVC Pipe Using Solvent Cement.

CCC. ASTM D2729 – Standard Specification for Poly (Vinyl Chloride) (PVC) Sewer Pipe and Fittings.

DDD. ASTM D2774 – Standard Practice for Underground Installation of Thermoplastic Pressure Piping.

EEE. ASTM D2843 – Standard Test Method for Density of Smoke from the Burning or Decomposition of Plastics.

FFF. ASTM D2846 – Standard Specification for Chlorinated Poly (Vinyl Chloride) (CPVC) Plastic Hot and Cold Water Distribution Systems.

GGG. ASTM D2855 – Standard Practice for the Two-Step (Primer and Solvent Cement) Method of Joining Poly (Vinyl Chloride) (PVC) or Chlorinated Poly (Vinyl Chloride) (CPVC) Pipe and Piping Components with Tapered Sockets.

HHH. ASTM D3034 – Standard Specification for Type PSM Poly (Vinyl Chloride) (PVC) Sewer Pipe and Fittings.

III. ASTM D3139 – Standard Specification for Joints for Plastic Pressure Pipes Using Flexible Elastomeric Seals.

JJJ. ASTM D3212 – Standard Specification for Joints for Drain and Sewer Plastic Pipes Using Flexible Elastomeric Seals.

KKK. ASTM D3311 – Standard Specification for Drain, Waste, and Vent (DWV) Plastic Fittings Patterns.

LLL. ASTM D4976 – Standard Specification for Polyethylene Plastics Molding and Extrusion Materials.

MMM. ASTM D5926 – Standard Specification for Poly (Vinyl Chloride) (PVC) Gaskets for Drain, Waste, and Vent (DWV), Sewer, Sanitary, and Storm Plumbing Systems.

NNN. ASTM D6707 – Standard Specification for Circular-Knit Geotextile for Use in Subsurface Drainage Applications.

OOO. ASTM E84 – Standard Test Method for Surface Burning Characteristics of Building Materials.

PPP. ASTM F439 – Standard Specification for Chlorinated Poly (Vinyl Chloride) (CPVC) Plastic Pipe Fittings, Schedule 80.

QQQ. ASTM F441 – Standard Specification for Chlorinated Poly (Vinyl Chloride) (CPVC) Plastic Pipe, Schedules 40 and 80.

RRR. ASTM F477 – Standard Specification for Elastomeric Seals (Gaskets) for Joining Plastic Pipe.

SSS. ASTM F493 – Standard Specification for Solvent Cements for Chlorinated Poly (Vinyl Chloride) (CPVC) Plastic Pipe and Fittings.

TTT. ASTM F656 – Standard Specification for Primers for Use in Solvent Cement Joints of Poly (Vinyl Chloride) (PVC) Plastic Pipe and Fittings.

UUU. ASTM F913 – Standard Specification for Thermoplastic Elastomeric Seals (Gaskets) for Joining Plastic Pipe.

VVV. ASTM F1336 – Standard Specification for Poly (Vinyl Chloride) (PVC) Gasketed Sewer Fittings.

WWW. ASTM F1476 – Standard Specification for Performance of Gasketed Mechanical Couplings for Use in Piping Applications.

XXX. ASTM F1548 – Standard Specification for Performance of Fittings for Use with Gasketed Mechanical Couplings Used in Piping Applications.

YYY. AWS A5.8 – Specification for Filler Metals for Brazing and Braze Welding.

ZZZ. AWS 5.31 – Specification for Fluxes for Brazing and Braze Welding.

AAAA. AWWA C105 – Standard for Polyethylene Encasement for Ductile-Iron Pipe Systems.

BBBB. AWWA C111 – Rubber-Gasket Joints for Ductile Iron Pressure Pipe and Fittings.

CCCC. AWWA C209 – Standard for Cold-Applied Tape Coatings for the Exterior of Special Sections, Connections, and Fittings for Steel Water Pipelines.

DDDD. AWWA C219 – Bolted, Sleeve-Type Couplings for Plain-End Pipe.

EEEE. AWWA C509 – Resilient-Seated Gate Valves for Water Supply Service.

FFFF. AWWA C515 – Reduced-Wall, Resilient-Seated Gate Valves for Water Supply Services.

GGGG. AWWA C651 – Disinfecting Water Mains.

HHHH. CISPI 301 – Standard Specification for Hubless Cast Iron Soil Pipe and Fittings for Sanitary and Storm Drain, Waste, and Vent Piping Applications.

IIII. CISPI 310 – Specification for Coupling for Use in Connection with Hubless Cast Iron Soil Pipe and Fittings for Sanitary and Storm Drain, Waste, and Vent Piping Applications.

JJJJ. ASSE 1003 Performance Requirements for Water Pressure Reducing Valves for Domestic Water Distribution Systems.

KKKK. ASSE 1079 – Performance Requirements for Dielectric Pipe Unions.

LLLL. UL 94 Standard for Tests for Flammability of Plastic Materials for Parts in Devices and Appliances.

MMMM. UL 1285 Standard for Safety Pipe and Couplings, PVC and PVCO for Underground Fire Service.

NNNN. NSF/ANSI 61 – Drinking Water System Components – Health Effects.

OOOO. NSF/ANSI 372 – Drinking Water System Components – Lead Content.

PPPP. Federal Specifications and Standards DD-G-541B – Glass (Laboratory).

1.5 QUALITY ASSURANCE

A. Manufacturer: For each product specified, provide components by the same manufacturer throughout.

B. Valves: Manufacturer's name, size, and pressure rating shall be cast or marked on valve body or handle.

C. Piping shall be labeled along its entire length indicating size, class, material specification, manufacturer's name and **country of origin**.

D. Foreign pipe, fittings or valves are unacceptable.

E. All cast iron soil pipe and fittings shall be marked with the collective trademark of the Cast Iron Soil Pipe Institute (CISPI) and shall be listed by NSF International.

F. Welding Materials and Procedures: Conform to ASME Code and applicable state labor regulations.

G. Welders Certification: In accordance with ASME Section IX.

1.6 SUBMITTALS

A. Submit under provisions of Division One.

B. Submit product data under provisions of Division One.

C. Include pipe materials, pipe fittings, valves, and accessories. Provide manufacturer's catalog information, product certifications, and **country of origin**. Indicate valve data and ratings.

1.7 PROJECT RECORD DOCUMENTS

A. Submit under provisions of Division One.

B. Record actual locations of valves.

1.8 OPERATION AND MAINTENANCE DATA

A. Submit under provisions of Division One.

B. Maintenance Data: Include installation instructions, spare parts lists, exploded assembly views.

1.9 QUALIFICATIONS

A. Manufacturer: Company specializing in manufacturing the Products specified in this section with a minimum of 5 years documented experience and must be a domestic manufacturer.

B. Installer: Company specializing in performing the work of this section with a minimum of 5 years documented experience.

1.10 DELIVERY, STORAGE, AND HANDLING

A. DELIVERY: Deliver clearly labeled piping and valves to; and store, protect and handle products on site in accordance with the provisions of Division One.

B. TIMING AND COORDINATION: Arrange for delivery of materials to allow for minimum storage time at the project site. Coordinate with the scheduled time of installation.

C. ACCEPTANCE: Accept product on site in original factory packaging. Receive valves on site in shipping containers with labeling in place. Inspect for damage. Damaged valves shall not be acceptable.

D. STORAGE: Store materials in a clean, dry location, protected from weather and damage.

E. Provide temporary protective coating on cast iron and steel valves.

F. Provide temporary end caps and closures on piping and fittings. Maintain in place until installation.

G. Protect installed piping systems from entry of foreign materials by providing temporary covers, as completing sections of the work, and isolating parts of completed systems. Tape will not be allowed as an acceptable end cover.

1.11 EXTRA MATERIALS

A. Furnish under provisions of Division One.

1.12 REGULATORY REQUIREMENTS

A. Perform work in accordance with plumbing and building codes having jurisdiction.

B. **No PVC pipe or fittings, or similar un-rated material, will be allowed in any areas where pipe is to penetrate a fire rated assembly or is to be installed in a return air plenum unless the entire length of all such piping is encased within a minimum two (2) hour fire rated enclosure**.

C. Provide a water pressure regulating valve assembly at the service entry where incoming water supply pressure is greater than 70 psi.

PART 2 - PRODUCTS

2.1 SANITARY SOIL, WASTE AND VENT PIPING, BURIED WITHIN 5 FEET OF BUILDING, BELOW GRADE

A. Cast Iron Pipe: ASTM A74 service weight.

1. Fittings: Cast iron, ASTM A74 drainage pattern.

2. Joints: Hub and spigot, ASTM C564 neoprene, compression type gaskets or lead and oakum.
1. Acceptable manufacturers (all pipe and fittings shall be from a single manufacturer):
   a. Tyler Pipe
   b. Charlotte Pipe
   c. AB&I Foundry
2. Provide ASTM D4976 polyethylene protective wrap in tubular or sheet form, minimum 8 mil nominal thickness, in accordance with manufacturer's installation guidelines, for all piping.

2.2 SANITARY SOIL, WASTE AND VENT PIPING, WITHIN BUILDING, ABOVE GRADE

A. Cast Iron Pipe: CISPI 301 or ASTM A888, hubless.

1. Fittings: Cast iron, CISPI 301 or ASTM A888 drainage pattern.
2. Acceptable manufacturers (all pipe and fittings shall be from a single manufacturer):
   a. Tyler Pipe
   b. Charlotte Pipe
   c. AB&I Foundry

3. Joints: No hub, ASTM C564 neoprene gaskets with ASTM C1540 heavy duty wide bodied stainless steel clamp and solid shield assembly constructed of type 300 series stainless steel. Couplings shall have four clamps for pipe sizes up to and including 4" and shall have six clamps for pipe sizes larger than 4". Clamp assemblies shall conform to FM 1680 Class 1 where required by the administrative authority. Torque all clamps per manufacturer's recommendations.

B. Copper Tubing: ASTM B306, DWV, for sizes 2" and smaller.

1. Fittings: ASME B16.23 cast copper alloy solder joint drainage fittings (DWV), or ASME B16.29, wrought copper and wrought copper alloy solder joint drainage fittings (DWV).
2. Joints between copper pipe and fittings shall be made in accordance with ASTM B828 using ASTM B32 Alloy Grade Sn 50 solder (50-50 tin-lead).
3. Joints between copper and cast iron pipe shall be made by way of copper soldered to a brass ferrule and the ferrule joined to the cast iron hub by a compression or caulked joint.

C. Brass Pipe: ASTM B43, chrome plated

1. Fittings: ASME B16.23 cast bronze, chrome plated.
2. Joints: In accordance with ASTM B828 using ASTM B32 Alloy Grade Sn 50 solder (50-50 tin-lead) or as recommended by the manufacturer.
3. Applies to exposed piping applications (such as kitchens), wherever required by the prevailing code or by the Authority Having Jurisdiction.

2.1 DOMESTIC WATER PIPE, BURIED WITHIN 5 FEET OF BUILDING EDGE, BELOW GRADE

A. Copper Tubing: ASTM B88, Type K, soft annealed. Provide for pipe sizes up to and including 2-1/2".

1. Fittings: ASTM B16.22 wrought copper pressure fittings.
2. Joints shall be as follows:
   a. **No joints shall be permitted for pipe sizes 2" and smaller. All such piping must be run continuous below slab on grade and brought up**

to no less than 12" above the finished floor before any joint is provided.

b. For sizes larger than 2", joints between copper pipe and fittings shall be brazed and shall be made in accordance with all the applicable portions of ASTM B828, manufacturer's recommendations, and AWS requirements. Brazing filler metal shall be in accordance with AWS A5.8 and any required flux shall meet AWS A5.31, Type FB3-A or FB3-C.

3. Beginning at no closer than the 5'-0" mark from the building, all piping buried or in contact with concrete shall be provided with one of the following, which shall also extend to a minimum of 6" above the finished floor:
   a. AWWA C209 cold-applied, integrated primer type, elastomeric adhesive, laminate polymeric tape coating, minimum 35 mil nominal thickness, in accordance with manufacturer's installation guidelines. Chase Construction Products Tapecoat H35 or approved equivalent.
   b. Continuous polyethylene lining, minimum 60 mil nominal thickness.

B. Ductile Iron Pipe: Minimum pressure class 150, ANSI/AWWA C151/A21.51. Provide for pipe sizes 3" and larger.

1. Fittings: Standard ductile iron, ANSI/AWWA C110/A21.10.
2. Joints: Rubber-gasketed and bolted mechanical joints, ANSI/AWWA C111/A21.11. Installation shall be in accordance with ANSI/AWWA C600 and approved pipe lubricant shall be used for optimum gasket sealing and long-term performance.
3. Note: A single fitting may be installed below slab on grade to facilitate underground pipe entry up to above floor from an immediately adjacent exterior building wall.
4. Provide continuous polyethylene encasement for all piping buried or in contact with concrete in accordance with ANSI/AWWA C105/A21.5, beginning at no closer than the 5'-0" mark from the building and to a minimum of 6" above the finished floor.

C. Stainless Steel Pre-Fabricated In-Building Riser (acceptable for sizes 2" through 10")

1. Corrosion resistant Type 304 stainless steel construction single, extended 90 degree fitting.
2. UL listed, FM approved and NFPA 24 compliant.
3. Lead free and NSF/ANSI 61 (372) certified.
4. Acceptable manufacturers:
   a. Ames Fire & Waterworks Series IBR (4" through 10") and IBR2 (2", 2-1/2", and 3")
   b. Zurn Wilkins Model WBR (4" through 10")
5. Note: For this application, the inlet joint for larger diameter (4" through 10") piping (which **shall not** be located below a building slab or foundation) can be rubber gasketed push-on type, ANSI/AWWA C111/A21.11. Installation shall be in accordance with ANSI/AWWA C600.
6. Provide continuous polyethylene encasement for all piping buried or in contact with concrete in accordance with ANSI/AWWA C105/A21.5, beginning at no closer than the 5'-0" mark from the building and to a minimum of 6" above the finished floor.

2.2 DOMESTIC WATER PIPING, WITHIN BUILDING, BELOW GRADE

A. Copper Tubing: ASTM B88, Type K, soft annealed.

1. No joints allowed below slab, run tubing continuous.
2. Provide AWWA C209 cold-applied, integrated primer type, elastomeric adhesive, laminate polymeric tape coating, minimum 35 mil nominal thickness, in accordance with manufacturer's installation guidelines, for all piping buried or in contact with

concrete, to a minimum of 6" above finished floor. Chase Construction Products Tapecoat H35 or approved equivalent.

3. Applies to installations including services to island sinks and trap primer lines.

2.3 DOMESTIC WATER PIPING, WITHIN BUILDING, ABOVE GRADE

A. Copper Tubing: ASTM B88, Type L, hard drawn.

1. Fittings: ASME B16.18, cast bronze or ASTM B16.22 wrought copper alloy solder joint pressure fittings.
2. Joints between copper pipe and fittings shall be made in accordance with ASTM B828 using ASTM B32 Alloy HB lead-free solder.
3. Fittings and joints for pipe sizes 1/2" through 4" may be mechanical press-connect system joints with ASME B16.51 lead-free copper bodied fittings with integral ethylene-propylene diene monomer rubber (EPDM) sealing gaskets. All fittings, couplings, and adapters shall be the product of a single system manufacturer and only that manufacturer's approved press tools, kits, and jaws shall be used.
   a. EPDM o-rings shall be pre-installed and lubricated with ANSI/NSF 61 listed lubricant.
   b. All installers of copper press-connect fittings shall be trained by the fitting manufacturer's appointed representative and carry such credentials for the duration of the project.
   c. The fitting manufacturer's representative shall conduct periodic inspections of the installation and shall provide written reports of such inspections to the Contractor and Engineer, including any observed deviations from the manufacturer's recommended installation practices.
   d. Acceptable system manufacturers: Viega or pre-approved equal.
4. Fittings and joints for pipe sizes 2-1/2 inch and larger shall be rolled groove type for copper tubing with all tools, couplings, adapters, fittings, gaskets, and **valves** the product of a single system manufacturer.
   a. Fittings shall be cast bronze using lead-free alloys per ASTM B584 or copper wrought copper constructed to ASTM B75, compliant with NSF/ANSI 61 for potable water service applications, and meet ASTM F1548.
   b. Couplings shall be epoxy/enamel (rust-inhibiting) coated ductile iron housings conforming to ASTM A536.
   c. Gaskets shall be EPDM for potable water, meeting ASTM F1476, and NSF 61/NSF 372 certified for potable water service from 30 degrees to 180 degrees F.
   d. Acceptable system manufacturers: Victaulic, Grinnell, Anvil Gruvlok.

2.14 ADAPTERS, TRANSITIONS, UNIONS, COUPLINGS, FLANGES, CONNECTORS

A. (Non-Acid Waste) Drainage Applications:

1. Provide approved listed adapter and transition fittings appropriate to the specific pipe transition and in accordance with code requirements.
2. For dissimilar piping above ground, provide stainless steel shielded, molded elastomeric couplings and adapters meeting ASTM C564 and ASTM C1460. Applies to installations including cast iron to PVC transitions immediately adjacent to building slabs on grade.
3. For dissimilar underground piping not below building slab, provide shear resistant .012" thick 300 series stainless steel shielded, PVC gasketed flexible couplings and adapters meeting ASTM D5926 and ASTM C1173. For direct-bury applications, provide AWWA C209 cold-applied, integrated primer type, elastomeric adhesive, laminate polymeric tape coating, minimum 35 mil nominal

thickness, in accordance with manufacturer's installation guidelines, to completely wrap the shield, banding, and screws. Chase Construction Products Tapecoat H35 or approved equivalent.

4. Acceptable manufacturers:
   a. Anaco-Husky/Cremco
   b. Mission Rubber Company LLC
   a. Fernco, Inc.
   b. Fernco, Inc. Strong Back RC 1000 Series (underground piping, not below building slab; or readily accessible underground piping transitions in backwater valve pits, etc.)
5. Adapters, couplings, bushings for copper DWV pipe shall be cast bronze or wrought copper, ASME B16.23/B16.29.

B. Domestic Water Applications:

1. Provide joints between various materials with approved adapter and transition fittings appropriate to the specific pipe transition and in accordance with code requirements and the manufacturer's instructions.
2. For copper tube and pipe: adapters, bushings, plugs, caps, and couplings shall be wrought copper or cast bronze; flanges (minimum class 150) and unions shall be cast bronze. Provide with solder or threaded connections as necessary and as produced to applicable ASME standards B16.15, B16.18, B16.22, B16.24, B16.50, B1.20.1. All such appurtenances shall be for use in above ground potable water systems.
3. Above slab transitions for water service entries:
   a. 100% fusion bonded epoxy coated ASTM A536 cast ductile iron construction coupling with acrylonitrile butadiene rubber (NBR) gaskets and EPDM insulating boot for water service. 5/8 inch high strength stainless steel bolts and nuts. Coupling shall meet AWWA C219. Romac Industries, Inc. IC501 or pre-approved equivalent.
   b. 100% fusion bonded 14 mil epoxy coated coupling with ASTM A536 cast ductile iron rings. Complete with acrylonitrile butadiene rubber (NBR) gaskets and type 304 stainless steel bridge, spacers, nuts, and bolts. Coupling shall meet AWWA C219, NSF 61, and NSF 372. Krausz USA Hymax Grip Coupling Restraint or pre-approved equivalent.
4. Dielectric connections:
   a. For pipe sizes 2 inch and smaller, provide lead-free dielectric unions, rated to 180 F at 250 psi and compliant to ASSE 1079.
   b. For pipe sizes larger than 2 inches, provide lead-free dielectric flanged pipe fittings, rated to 180 F at 175 psi and meeting ASME B16.1.
   c. For grooved copper joining systems, provide grooved end dielectric transition fitting from system manufacturer, with virgin polypropylene internal lining, meeting NSF 61.

C. General:

1. Unions for ferrous pipe shall be ASTM B16.39 galvanized malleable iron, threaded, minimum pressure class 150.
2. Plugs and bushings for ferrous pipe shall be ASME B16.14 galvanized malleable iron, threaded.
3. Nipples for ferrous pipe shall be schedule 40, galvanized, ASTM A53 welded steel pipe nipples, threaded, meeting ASTM A733.
4. Couplings for ferrous pipe shall be galvanized steel, threaded, manufactured in accordance with ASTM A865.

5. Flanges for ferrous pipe shall be galvanized forged steel construction, either socket weld or slip-on weld type, minimum pressure class 150, manufactured to ASME B16.5.
6. Bolts, nuts, and gaskets for flanged connections shall be appropriate to the pipe material, fluid type, temperature, and pressure. 1/16" thick pre-formed neoprene, typical.
7. Provide flexible stainless steel connectors at pumps and other such equipment, in accordance with manufacturer's recommendations. Connectors shall have corrugated hose and braided 300 series stainless steel jacketing. Carbon steel flanged or grooved ends as appropriate. NSF 372 lead-free for all potable water applications. Metraflex Company or pre-approved equivalent.

2.15 GATE VALVES (IRON)

A. ASTM A126 cast iron bodied, class 125 gate valve with bolted bonnet, non-rising ASTM B16 brass stem and packing gland, solid wedge, cast iron hand-wheel. Bronze wedge for sizes up through 6" and cast iron wedge with bronze bushing and wedge face rings for sizes 8" and larger.

B. Basis of design:

1. NIBCO T-619 (threaded) for sizes 2" through 4".
2. NIBCO F-619 (flanged) for sizes 6" and larger.

C. Acceptable alternate manufacturers:

1. Apollo
2. Milwaukee

D. Applies to only to limited installations such as services from submersible pumps and ejectors. Not to be used for domestic water systems.

2.16 GATE VALVES (DUCTILE IRON)

A. Fusion bonded epoxy coated ASTM A536 ductile iron bodied, class 125 gate valve with bolted bonnet, non-rising Type 304 stainless steel stem, resilient wedge. End connections as suited for adjacent piping. Provide with square operating nut for extended handle operation or with hand-wheel as appropriate for depth of burial and access. Certified lead-free to NSF 61/NSF 372 and AWWA C509 & C515 compliant (3" and larger).

B. Basis of design:

1. NIBCO 619 series for sizes 2" through 12".

C. Applies to outdoor, buried below grade domestic water main installations beyond 5 feet from the building edge. Not to be used inside of buildings.

2.17 BALL VALVES

A. All bronze cast construction two-piece 600 psi body, blow-out proof stem, Teflon seated, lead-free, with stainless steel trim (including ball, stem, and valve handle). Threaded connections. Certified lead-free to NSF 61/NSF 372 and suited to 180 degrees F.

B. Basis of design (bronze valves):

1. NIBCO T-585-66-LF (full port) for all sizes up through 2".

2. NIBCO T-580-66-LF (conventional port) for sizes 2-1/2" and 3".

C. Valves 4" and larger shall be split body stainless steel construction, 275 psi cold working pressure, blow-out proof stem, PTFE seated, type 316 stainless steel trimmed, class 150, full port design with manual gear operator. NIBCO F-515-S6-F-66-FS.

D. Acceptable alternate manufacturers:

1. Apollo 77 CLF-A series (full port) for all sizes up through 2".
2. Milwaukee UPBA-400S (full port) for all sizes up through 2".
3. Apollo 77 CLF-A series (full port) for size 2-1/2" and Apollo 70LF-140 series (standard port) for 3".
4. Milwaukee UPBA-100S (standard port) for sizes 2-1/2" and 3".

E. Applies to domestic water system installations.

F. Provide valves complete with extended lever handles as required to accommodate insulation and full valve operation.

G. Provide valves complete with memory stop kit where used for balancing applications.

2.18 BUTTERFLY VALVES

A. ASTM A536 ductile iron bodied, (minimum) 200 psi lug type wafer style butterfly valve with ASTM A582 Type 400 series stainless steel stem, ASTM B148 aluminum bronze disc, and EPDM rubber seat/lining. Extended neck. Certified lead-free to NSF 61/NSF 372 and suited to 180 degrees F.

B. Basis of design:

1. NIBCO LD-2000-3 (lever handle operated) for sizes 2-1/2" through 4".
2. NIBCO LD-2000-5 (manual gear operated) for sizes 6" and larger.
3. Install between standard ASME (minimum) class 125 flanges in accordance with manufacturer's recommendations.

C. Acceptable alternate manufacturers:

1. Apollo
2. Milwaukee ML233E (lever handle operated) and ML333E (manual gear operated).

D. Applies to domestic water system installations.

2.19 BUTTERFLY VALVES (GROOVED)

A. Grooved end, lead-free, copper alloy bodied, 300 psi butterfly valve with EPDM encapsulated ductile iron or aluminum bronze disc, EPDM seat/seal, stainless steel stem and trim, and extended neck. ANSI/NSF 61 certified for potable water systems. Lever handle operated for sizes 2-1/2" through 4" and manual gear operated with handwheel for sizes 6" and larger.

B. Acceptable manufacturers:

1. Victaulic 608N (cast brass body with aluminum bronze construction disc).
2. Grinnell B680 (ASTM B584 bronze bodied).
3. Anvil Gruvlok Series 6700 CTS (ASTM B584 bronze bodied).

C. Applies only to domestic water system installations employing grooved copper joining systems, as specified elsewhere in this section. Manufacturers shall only be acceptable where their grooved systems are provided.

2.20 CHECK VALVES (BRONZE)

A. ASTM B62/ASTM B584 bronze body and disc, minimum 200 psi (cold working pressure) Y-pattern horizontal swing type check valve with removable bronze bonnet, Type 300 series stainless steel nuts and hinge pin, and PTFE disc seat. Threaded connections. Certified lead-free to NSF 61/NSF 372 and suited to 180 degrees F.

B. ASTM A126 cast iron bodied, (minimum) class 125 globe style spring loaded (silent) check valve with ASTM B584 bronze disc and seat. Flanged connections. Certified lead-free to NSF 61/NSF 372 and suited to 200 degrees F.

C. Basis of design:

1. NIBCO T-413-Y-LF (Y-pattern swing type) for sizes up through 2”.
2. NIBCO F-910-B-LF (globe style spring loaded type) for sizes 2-1/2” and larger.

D. Acceptable alternate manufacturers:

1. Apollo (for sizes up through 2”)

E. Applies to domestic water system installations including associated pump discharge lines. Valves shall be suited for installation in both horizontal lines and vertical lines with upward flow, in accordance with manufacturer’s recommendations.

2.21 CHECK VALVES (IRON)

A. ASTM A126 cast iron bodied, (minimum) class 125 conventional horizontal swing type check valve with bronze, cast or ductile iron disc. 200 psi cold working pressure. Threaded or flanged connections.

B. Basis of design:

a. NIBCO T-918-B (threaded connections) for sizes 2” through 4”.
b. NIBCO F-918-B (flanged connections) for sizes 6” and larger.

C. Acceptable alternate manufacturers:

a. Apollo (flanged in all sizes)
b. Milwaukee F-2974A (flanged in all sizes)

D. Applies only to limited installations such as services from submersible pumps and ejectors. Not to be used for domestic water systems.

2.22 PRESSURE REGULATING VALVES (PRV’s)

A. ASTM B62/ASTM B584 bronze bodied direct acting, ASSE 1003 single diaphragm type pressure regulating valve with removable bronze bonnet, in-line stainless steel strainer and spring, and FDA approved EPDM seat disc and Buna-N diaphragm. Threaded connections. Certified lead-free to NSF 61/NSF 372 and suited to 180 degrees F.

B. NSF 61 epoxy coated ductile iron bodied pilot-operated globe style pressure regulating valve assembly. Complete with low-flow bypass and stainless steel, bronze, and copper

trim and fittings. NSF 61 EPDM seat disc and diaphragm. Threaded or flanged connections. Suited to 180 degrees F.

C. Basis of design:

1. Apollo PRH-T-Y-LF (36HLF series) for direct acting valves, sizes up through 3”.
2. Apollo A127-LF series for pilot operated valves, sizes 1-1/4” through 4”.

D. Acceptable alternate manufacturers:

1. Cla-Val
2. Victaulic (pilot-operated valves)

E. PRV’s shall automatically reduce inlet pressure to a steady lower downstream pressure, regardless of changing flow rate. Provide complete with inlet strainer, inlet and outlet pressure gauges, isolation valves, and unions. Provide bypass line around assembly with normally closed valve.

2.23 BALANCING VALVES

A. Self-contained, fully automatic thermally actuated balancing valve shall continuously adjust flow to maintain the desired domestic hot water temperature within the branch line, regardless of system operating pressure. Valve shall modulate between open and closed position within a 10 degrees F range. Valve body and all internal components shall be constructed of stainless steel with major components constructed of Type 303 stainless. Rated for 200 psi maximum working pressure and no less than 250 degrees F maximum working temperature. Lead-free and ANSI/NSF 61 compliant. Threaded connections.

B. Basis of design:

1. ThermOmegaTech Circuit Solver, sizes 1/2" through 2”. Provide a union and ball type shutoff valve on both sides of the balancing valve.
2. ThermOmegaTech Circuit Solver with integrated union (CSU) assembly, sizes 1/2" and 3/4". Balancing valve assembly shall come complete with union body and ball type shutoff valves on both sides.

C. Applies to circulated domestic hot water system installations including multi-branch parallel piping circuits and single-loop piping circuits.

1. Provide balancing valve at end of **each** domestic hot water supply line (after last fixture served) just prior to the hot water return line, as indicated on Drawings and in accordance with manufacturer’s installation recommendations.
2. Provide a pipe tee or elbow with bushing as appropriate, 3/4" threaded thermowell, and bi-metal adjustable angle 3 inch dial thermometer upstream of each balancing valve. Thermowell stem length and thermometer temperature probe length to be suited for pipe size, insulation thickness, and to ensure clearance for maintenance access and easy viewing of thermometer. Trerice bimetal/sensor, threaded-stepped shank thermowell (style 76) of lead-free brass (PBF) material. Trerice Model B836 thermometer with 300 stainless steel case and stem, hermetically sealed, double strength glass windowed, aluminum white-faced dial, complete with external reset and 0 to 200 degrees F range. Thermowell and thermometer face to be oriented upright for readability.

PART 3 - EXECUTION

3.1 EXCAVATION, BEDDING AND BACKFILL

A. This section shall apply for the excavation, bedding, and backfill of all buried piping unless specifically noted otherwise. All work shall be coordinated with any job site subsurface drainage/dewatering and adjusted accordingly.

B. Establish elevations of buried piping outside the building to ensure the following:

1. Not less than 2 feet of cover, or not less than maximum depth of frost penetration, whichever is the greater.
2. For water lines intended for fire protection service, the depth of cover shall be:
   a. Not less than 2'-6" in those locations where frost is not a factor.
   b. Not less than 1'-0" below the frost line for the locality.
   c. Not less than 3'-0" for piping under driveways.
   d. Not less than 1'-0" below the bottom of the building foundation/footers.
   e. In full compliance with the requirements of NFPA 13 and NFPA 24.

C. Excavation:

1. Excavate trenches for underground piping to the required depths.
2. The bottom of the trench or excavation shall be cut to a uniform grade.
3. Should rock be encountered, excavate 6 inches below grade, fill with bedding material and tamp to existing density.
4. Coordinate alignment of pipe trenches to avoid obstructions. Ensure that proposed routing of pipe will not interfere with building foundation before any trenching has begun. Should conflicts occur, contact Architect/Engineer before proceeding.
5. Should any sleeving of the building foundation be required, this shall be provided as directed by the structural engineer of record AND in accordance with the prevailing code, but in no case shall the sleeve be any less than two (2) pipe sizes greater than the pipe it serves.

D. Bedding and Backfill:

1. Backfill shall not be placed until the piping has been inspected, tested and approved. Complete backfill to the surface of natural ground or to the lines and grades indicated on drawings. **Provide 6 inch stabilized sand bed with 4 inch stabilized sand cover around each pipe**. Provide select fill up to finished surface or grade, unless indicated otherwise by project geotechnical report or specified otherwise in Division 02.
2. Compacting Backfill: Place material in uniform layers of 8 inches maximum, loose measure and compact to not less than 95% of maximum soil density as determined by ASTM D-698 Standard Proctor.
3. Restoration: Compact backfill, where trenching or excavation is required in improved areas such as pavements, walks and similar areas, to a condition equal to the adjacent undisturbed earth and restore surface of the area to the condition existing prior to trenching or excavating operation.
4. A clay fill "trench plug" extending 3 feet inside the building line and 5 feet outside the building line shall be placed to completely surround utility lines passing beneath the foundation and grade beam. The materials shall consist of on-site soils with a plasticity index (PI) between 30 and 40 percent compacted to at least 95 percent of the Standard Proctor and maximum dry density as determined by ASTM D-698.

E. Cement Stabilized Sand:

1. Materials:
   a. Cement shall be Type I Portland cement conforming to ASTM C150.

b. Sand shall be clean, durable sand meeting grading requirements for fine aggregates of ASTM C33 and free of organic matter and deleterious substances.
c. Water shall be potable and free of oils, acids, alkalis, organic matter, or other deleterious substances, meeting requirements of ASTM C94.

2. Mixture:
a. Product shall consist of not less than 1.5 sacks of Portland cement per ton of dry sand.
b. Mixture shall contain sufficient water to hydrate the cement and be thoroughly mixed in a pugmill type mixer.

F. For water lines (including In-Building Risers) intended for fire protection service, provide joint restraints by way of concrete thrust blocks in accordance with the requirements of NFPA 13 and NFPA 24.

G. Aggressive Soil Conditions: Soil shall be considered aggressive and protection of buried metallic piping shall be provided as specified if any of the following situations exist:

1. Conditions are identified as such by the project geotechnical report or project geotechnical engineer.
2. The soil environment is a landfill area, swamp, marsh, polluted river bottom, cinder bed, or has alkaline soils.
3. A score of ten or higher is tallied when applying the soil assessment tool detailed in Appendix A of AWWA C105. An excerpt of this evaluation procedure is provided below for reference but is not intended as a substitute for the complete and latest Standard:

Numerical Corrosivity Scale

Soil Parameter	Assigned Points
Resistivity (ohm-cm)	
<700	10
700 – 1,000	8
1,000 – 1,200	5
1,200 – 1,500	2
1,500 – 2,000	1
>2,000	0
pH	
0 – 2	5
2 – 4	3
4 – 6.5	0
6.5 – 7.5	0
7.5 – 8.5	0
>8.5	3
Redox Potential (mV)	
>100	0
50 – 100	3.5
0 – 50	4
<0	5
Sulfides	

Positive	3.5
Trace	2
Negative	0
Moisture	
Poor drainage continuously wet	2
Fair drainage generally moist	1
Good drainage generally dry	0

3.2 INSTALLATION

A. General requirements for piping:

1. Ream pipe and tube ends. Remove burrs. Bevel plain end ferrous pipe.
2. Remove any scale, oil and dirt, on inside and outside, before assembly.
3. Prepare piping connections to equipment with flanges or unions.
4. Confirm pipe placement, depth/elevation, and flow lines prior to any installation.

B. General requirements for valves:

1. Install valves with stems upright or horizontal, not inverted.
2. Valves shall be line-sized unless specifically noted otherwise.
3. Provide clearance for installation of insulation and access to valves and operable fittings. Valves installed beyond reasonable reach shall be provided with a chain operator.
4. Provide access doors where valves and operable fittings are not otherwise accessible. Access doors shall be of approved types set in locations pre-approved by submittal to the Architect.
5. Gate valves installed below grade shall be covered with an adjustable cast iron roadway box extended to grade. Cover shall be cast iron with 'water' cast on top of cover and shall be set flush to finished paving or 2" above finished earthen grade. Box shall be supported from undisturbed soil or concrete base and shall not introduce any stress to piping under all traffic conditions.

C. Install all materials in accordance with the manufacturer's published instructions.

D. All exposed sewer and water pipe in toilet rooms or other finished areas of the building shall be chrome plated.

E. Provide non-conducting dielectric connections wherever joining dissimilar metals.

F. Route piping in an orderly manner, parallel and perpendicular to building column grid lines, unless indicated otherwise on drawings, and maintain gradients.

G. Install piping to conserve building space and not conflict with other trades or interfere with intended use of space.

H. Group piping whenever practical at common elevations.

I. Install piping to allow for expansion and contraction without stressing pipe, joints, or connected equipment.

J. Where pipe support members are welded to structural building framing, scrape, brush clean, and apply one coat of zinc rich primer to welding.

K. Provide encasement for and support for utility meters in accordance with the requirements of utility companies.

L. Prepare pipe, fittings, supports, and accessories not pre-finished, ready for finish painting.

M. Maintain uniformity in the installation of piping materials and joining methods. Do not mix material types.

N. Where connecting new underground sanitary, storm, or vent piping to existing piping of dissimilar material, provide suitable mechanical transition fittings complete with corrosion protection for metallic elements. Chase Construction Products Tapecoat H35 or approved equivalent and a final coat of coal tar to completely cover the transition.

O. Solder joints shall be wiped clean at each joint, remove excess metal while molten and flux residue when cooled.

P. Waste nipple from wall to tapped tee shall be schedule 40 threaded galvanized steel pipe or brass or copper with threaded adapter.

Q. General requirements for cast iron piping installation:

1. Install all pipe and fittings in accordance with published recommendations from the manufacturer and the Cast Iron Soil Pipe Institute (CISPI). Specific items referenced below are not intended as a substitute for the complete and latest recommendations.
2. Install bell and spigot type pipe with bell end upstream.
3. Above ground horizontal pipe (suspended) shall:
    a. Be supported at no less than at every joint, and within 18” of the hub or coupling.
    b. Be maintained in alignment. Sagging or grade reversal shall be unacceptable.
    c. Be supported at terminal ends of all runs or branches and at each change of direction or alignment.
    d. Have all closet bends, traps, trap arms, and similar branches firmly secured.
    e. Be braced to prevent movement or joint separation.
    f. Be provided with suitable sway bracing (such as clamps, rods, and hardware) where pipe and fittings are suspended in excess of 18” by means of non-rigid hangers.
4. Above ground vertical pipe shall:
    a. Be secured at each stack base.
    b. Be secured at each floor and riser clamps shall be provided on no greater than 15’-0” intervals.
    c. Be adequately supported to keep the system (pipe and contents) in alignment.
5. Provide seismic restraints in seismically active areas, whether specifically required by the prevailing code or not.

R. All grooved system tools and components (couplings, adapters, fittings, gaskets, **valves**, and specialties) shall be the product of a single domestic system manufacturer.

S. Grooved pipe system manufacturer shall provide on-site training for contractor’s field personnel by a factory trained representative in the proper use of grooving tools, application of groove, and product installation. Factory trained representative shall

periodically visit the job site and inspect installation. Contractor shall remove and replace any improperly installed products at no additional cost to the owner.

3.3 APPLICATION

A. Provide union downstream of all valves at equipment or apparatus connections.

B. Provide male adapters each side of threaded valves in copper piped system. Sweat solder adapters to tube prior to make-up of threaded connections.

C. Provide approved isolation valves for shut-off and to isolate all equipment items and distinct parts of systems. Isolation valves shall be provided for both hot and cold water in locations including, but not necessarily limited to, the following:

1. At each floor for each domestic water tap branching off from a vertical riser.
2. At each domestic water branch line capped for future use.
3. At each restroom or restroom group.
4. At each hose bibb, wall hydrant, hose reel, and trap primer device (except for flush valve or tailpiece type trap primer devices).
5. At each domestic water branch line within 24” of the corresponding main.
6. At each plumbing fixture not otherwise served by a localized fixture group isolation valve.

D. Each plumbing water rough-in stub out shall be fitted with a supply stop.

E. Valves installed in insulated piping shall be fitted with extended lever operators of sufficient length to raise handle above the insulation jacket material. Where valve is used for throttling service, the valve handle shall be equipped with adjustable memory stop device.

F. Provide non-slam type check valves on discharge lines from all water pumps. Install at a minimum length of 5 times the pipe diameter from the pump and in accordance with manufacturer’s installation recommendations.

3.4 ERECTION TOLERANCES

A. All gravity drainage lines in the building shall have 1/4 inch per foot fall where possible and not less than 1/8 inch per foot fall toward the main sewer. Pipe must be laid so that the slope will be uniform and continuous. Permission shall be secured from the Architect and Engineer before proceeding with any Work where existing conditions prevent the installation at the minimum grade specified.

B. All vent and branch vent pipes shall be graded and connected as to drip back by gravity to the drainage pipe it serves. A slope of 1 inch per 40 feet will suffice for this requirement, subject to the approval of the local Authority Having Jurisdiction.

C. Slope all horizontal water piping with uniform pitch of 1/8 inch per 10 feet to low points to allow for complete system drainage. For long runs, where constant pitch cannot be maintained, provide intermediate low points and rise up again from such locations. Slope horizontal branches back to mains or risers. Provide clearly identified supplementary drain valves where hose bibbs, hydrants, or sill cocks will not suffice for this requirement.

3.5 DISINFECTION OF DOMESTIC WATER PIPING SYSTEM

A. Prior to starting work, all domestic water systems shall be complete, thoroughly flushed clean and free of all foreign matter or erection residue.

B. Ensure PH of water to be treated is between 7.4 and 7.6 by adding alkali (caustic soda or soda ash) or acid (hydrochloric).

C. On building side of the main shut off valve, provide a 3/4" connection through which chlorine can be introduced into the water piping

D. Inject disinfectant, free chlorine in liquid, powder, tablet or gas form, in sufficient quantity to obtain 50 to 80 mg/L residual free chlorine solution throughout the entire domestic water piping systems.

E. Bleed water from outlets as required to ensure complete distribution and test for disinfectant residual at a minimum 15 percent of total outlets.

F. Maintain disinfectant in system for 24 hours.

G. If final disinfectant residual tests less than 25 mg/L, repeat treatment.

H. Flush disinfectant from system until residual equal to that of incoming water or 1.0 mg/L.

I. Take samples no sooner than 24 hours after flushing, from 5 percent of outlets and from water entry, and analyze in accordance with AWWA C651.

3.6 SERVICE CONNECTIONS

A. Provide new sanitary and storm sewer services connecting to existing building services or utility lines as shown on the drawings.

B. Before commencing work, field verify invert elevations required for sewer connections, confirm inverts and ensure that these can be properly connected with slope for drainage and cover as required.

C. Provide new domestic water service connecting to existing building services or utility lines as shown on plans. Assure connections are in compliance with requirements of the jurisdiction having authority.

D. Extension of services to the building shall be fabricated from the same materials as the utility service lines or those materials specified herein.

E. Should points of connection vary from those indicated on the drawings contractor shall properly allow for this in the actual connections field fabricated.

3.7 RODDING SEWERS

A. All sanitary soil and waste lines, both in the building and out, shall be rodded out after completion of the installation.

B. This Work shall be done, as part of the contract, to make certain that all lines are clear, and any obstruction that may be discovered shall be removed immediately. Rodding shall be accomplished by utilizing a rotary cutter, which shall be full size of pipe being cleaned.

3.8 TESTING OF PLUMBING PIPING SYSTEMS

A. During the progress of the work and upon completion, tests shall be made as specified herein and as required by Authorities Having Jurisdiction, including Inspectors, Owner or Architect. The Architect or duly authorized Construction Inspector shall be notified in writing at least 2 working days prior to each test or other Specification requirement which requires

action on the part of the Construction Inspector.

B. Tests shall be conducted as part of this work and shall include all necessary instruments, equipment, apparatus, and service as required to perform the tests with qualified personnel. Submit proposed test procedures, recording forms, and test equipment for approval prior to the execution of testing.

C. Tests shall be performed before piping of various systems have been covered or furred-in. For insulated piping systems testing shall be accomplished prior to the application of insulation.

D. All piping systems shall be tested and proved absolutely tight for a period of not less than 24 hours. Tests shall be witnessed by the Architect or an authorized representative and pronounced satisfactory before pressure is removed or any water drawn off.

E. Leaks, damage or defects discovered or resulting from test shall be repaired or replaced to a like new condition. Leaking pipe joints, or defective pipe, shall be removed and replaced with acceptable materials. Test shall be repeated after repairs are completed and shall continue until such time as the entire test period expires without the discovery of any leaks.

F. Wherever conditions permit, each piping system shall thereafter be subjected to its normal operating pressure and temperature for a period of no less than five 5 days. During that period, it shall be kept under the most careful observation. The piping systems must demonstrate the propriety of their installation by remaining absolutely tight during this period.

G. Domestic Water: Pressure test at one and one half times the normal working pressure or 125 psig, whichever is the greater, for 24 hours.

H. Sanitary Soil, Waste and Vents and Storm Sewer:

1. After the rough-in soil, waste and vent and other parts of the sanitary sewer including branch laterals have been set from the lowest level, at point of connection to existing utility lines, to above the floor line, all outlets shall be temporarily plugged or capped, except as are required for testing as described herein. Ground work shall not permit the backfill of trenches to cover any joints until the completion of testing. Back fill shall be limited to mid sections of full joints of piping only. For pipe in ground the piping shall be readied as described herein and filled with water to a verifiable and visible level to 10' above the lowest portions of the system being tested.
2. On multi-level buildings only one floor level shall be tested at a time. Each floor shall be tested from a level below the structure of the floor, or the outlet of the building in the case of the lowest level, to a level of 12 inches above the floor immediately above the floor being tested, or the top of the highest vent in the case of the highest building level. The pipes for the level being tested shall be filled with water to a verifiable and visible level as described above and be allowed to remain so for 24 hours. If after 24 hours the level of the water has been lowered by leakage, the leaks must be found and stopped, and the water level shall again be raised to the level described, and the test repeated until, after a 24 hour retention period, there shall be no perceptible lowering of the water level in the system being tested.
3. Should the completion of these tests leave any reasonable question or doubt of the integrity of the installation, additional tests including peppermint smoke, or other measures shall be performed to demonstrate the reliability of these systems to the complete satisfaction of the Owner's duly authorized representative. Such

tests shall be conducted and completed before any joints in plumbing are concealed or made inaccessible.

3.9 COMPLETE FUNCTIONING OF WORK

A. All work reasonably implied as essential to the complete functioning of the systems shown on the Drawings and Specification shall be completed as part of the work of this Division, unless specifically stated otherwise. It is the intention of the Drawings and Specification to establish the type and function of systems but not to set forth each item essential to the functioning of any system. In case of doubt as to the work intended or in the event of amplification or clarification thereof, the Contractor shall call upon the Architect for Supplementary Instructions and Drawings, etc.

END OF SECTION

SECTION 22 11 19 - PLUMBING SPECIALTIES

PART 1 - GENERAL

1.1 GENERAL REQUIREMENTS

A. The requirements of the General Conditions and Supplementary Conditions apply to all work herein.

B. The Basic Materials and Methods, Section 22 02 00, are included as a part of this Section as though written in full in this document.

1.2 SCOPE

A. The scope of the work shall include the furnishing and complete installation of the specialties covered by this Section, with all appurtenances, ready for the Owner's use.

B. Include the following work in addition to items normally part of this Section:

1. Hose Bibbs and Hydrants
2. Backflow Preventers
3. Water Hammer Arresters
4. Strainers and Filters
5. Thermostatic Mixing Valves
6. Floor Drains and Floor Sinks
7. Cleanouts
8. Trap Primers
9. Interceptors and Separators

1.3 RELATED WORK

A. Section 22 05 29 – Hangers and Support for Plumbing Piping and Equipment

B. Section 22 10 00 – Plumbing Piping

C. Section 22 30 00 – Plumbing Equipment

D. Section 22 40 00 – Plumbing Fixtures

1.4 REFERENCES

A. ANSI/ASSE 1010 – Performance Requirements for Water Hammer Arresters

B. ANSI/ASSE 1011 – Performance Requirements for Hose Connection Vacuum Breakers

C. ANSI/ASSE 1012 – Performance Requirements for Backflow Preventers with an Intermediate Atmospheric Vent

D. ANSI/ASSE 1013 –- Performance Requirements for Reduced Pressure Principle Backflow Preventers and Reduced Pressure Principle Fire Protection Backflow Preventers

E. ANSI/ASSE 1015 – Performance Requirements for Double Check Backflow Prevention Assemblies and Double Check Fire Protection Backflow Prevention Assemblies

F. ANSI/ASSE 1019 – Performance Requirements for Wall Hydrants with Backflow Protection and Freeze Resistance

G. ANSI/ASSE 1057 – Performance Requirements for Freeze Resistant Sanitary Yard Hydrants with Backflow Protection

H. ASME A112.6.3 – Floor Drains and Trench Drains

I. ASME A112.6.7 – Sanitary Floor Sinks

J. ASME A112.6.4 – Roof, Deck, and Balcony Drains

K. ASME A112.14.1 – Backwater Valves

L. ASME A112.14.3 – Grease Interceptors

M. ASME/ANSI A112.26.1 – Water Hammer Arresters

N. PDI WH-201 Water Hammer Arresters

O. AWWA C506 – Standard for Backflow Prevention Devices – Reduced Pressure Principle and Double Check Valve Types

P. AWWA C510 – Standard for Double Check Valve Backflow Prevention Assembly

Q. ASSE 1069 – Performance Requirements for Automatic Temperature Control Mixing Valves

R. ASSE 1070 – Performance Requirements for Water Temperature Limiting Devices

S. PDI G-101 – Testing and Rating Procedure for Hydro Mechanical Grease Interceptors

T. NSF/ANSI Standard 61: Drinking Water System Components – Health Effects

U. NSF/ANSI 372: Drinking Water System Components – Lead Content

1.5 QUALITY ASSURANCE

A. Manufacturer: For each product specified, provide components by the same manufacturer throughout.

1.6 SUBMITTALS

A. Submit under provisions of Division One.

B. Submit product data under provisions of Division One.

C. Include component sizes, rough-in requirements, service sizes, and finishes.

D. Manufacturer's Installation Instructions: Indicate assembly and support requirements.

1.7 PROJECT RECORD DOCUMENTS

A. Submit under provisions of Division One.

B. Record actual locations of equipment and backflow preventers.

1.8 OPERATION AND MAINTENANCE DATA

A. Submit under provisions of Division One.

B. Operation Data: Indicate frequency of treatment required for interceptors and separators.

C. Maintenance Data: Include installation instructions, spare parts lists, exploded assembly views.

1.9 DELIVERY, STORAGE, AND HANDLING

A. DELIVERY: Deliver clearly labeled specialties to; and store, protect and handle products on site in accordance with the provisions of Division One.

B. TIMING AND COORDINATION: Arrange for delivery of materials to allow for minimum storage time at the project site. Coordinate with the scheduled time of installation.

C. ACCEPTANCE: Accept specialties on site in original factory packaging. Inspect for damage. Damaged specialties shall not be acceptable.

D. STORAGE: Store materials in a clean, dry location, protected from weather and damage.

1.10 EXTRA MATERIALS

A. Furnish under provisions of Division One.

B. Provide two loose keys for hose bibbs and hydrants and spare hose end vacuum breakers.

1.11 REGULATORY REQUIREMENTS

A. Conform to applicable codes for the provision and installation of all required backflow prevention devices.

B. Provide certificate of compliance from authority having jurisdiction indicating approval of installation of backflow prevention devices.

C. Provide backflow prevention assembly test and maintenance report for all devices. A printed and signed form by the licensed tester that performed the work shall be provided both to the Owner and to the Public Water System in accordance with TCEQ (Texas Commission on Environmental Quality) requirements.

PART 2 - PRODUCTS

2.1 HOSE BIBBS/HYDRANTS

A. Hose Bibb: Bronze or brass construction, replaceable stem assembly, hose thread spout, complete with vandal resistant lockshield and ASSE 1011 integral vacuum breaker. Provide chrome plated and with removable key where exposed in public areas.

B. Wall Hydrant: Bronze or brass construction, replaceable stem assembly, hose thread spout, non-freeze, self-draining type with integral vacuum breaker. ASSE 1019. Unless specifically noted otherwise, provide recessed complete with heavy cast aluminum or nickel plated brass lockable box and loose key operator.

C. Floor Hydrant: Bronze or brass construction, replaceable stem assembly, hose thread spout, non-freeze, self-draining type with ASSE 1052 approved backflow preventer and vacuum breaker. All brass pipe and stem of suitable bury depth. Provide recessed in flush-mounted nickel plated brass lockable box with loose key operator. Ensure to located out of heavy traffic area unless box is appropriately rated.

D. Roof/Post Hydrant: Free-standing, low-lead, self-draining, non-freeze hydrant with cast iron handle and hose thread brass spout atop galvanized pipe riser. Complete with ASSE 1052 anti-siphon vacuum breaker. For rooftop applications provide complete with manufacturer's recommended mounting hardware for a secure installation and coordinate with roofing contractor to ensure a watertight seal is provided per the roofing system and any local code requirements.

E. ACCEPTABLE MANUFACTURERS:

1. J.R. Smith
2. Zurn
3. Mifab
4. Watts
5. Wade
6. Josam
7. Chicago (interior use hose bibbs only)
8. Woodford
9. Prier

2.2 RECESSED VALVE BOX

A. Washing Machine: Pre-formed galvanized or plastic rough-in box with brass long shank valves with wheel handles, threaded drain fitting for waste, and matching secured faceplate.

B. Refrigerator: Pre-formed galvanized or plastic rough-in box with brass long shank valve with wheel or quarter-turn handle and matching secured faceplate.

C. ACCEPTABLE MANUFACTURERS:

1. Guy Gray
2. Mifab
3. Sioux Chief
4. Oatey

2.3 BACKFLOW PREVENTERS

A. General Requirements: All assemblies shall be suited for the system anticipated working pressure and temperature as well as the intended orientation (vertical or horizontal) of the installation. All assemblies shall be lead-free per NSF/ANSI 372, unless specifically noted otherwise on the Drawings.

B. Strainer Requirements: Lead-free compliant strainers shall be provided at all backflow preventers on the upstream side of each assembly. Strainer bodies shall be either bronze/cast copper alloy or of cast iron/ductile iron construction with an FDA approved epoxy coating. Screens and internal components shall be stainless steel.

C. Reduced Pressure Backflow Preventers: ANSI/ASSE 1013; Bronze or FDA approved epoxy coated cast iron body with corrosion resistant internal parts and stainless steel springs; two independently operating, spring loaded check valves; intermediate internal pressure intermediate relief valve with water outlet; test cocks and isolation valves.

D. Double Check Valve Assemblies: ANSI/ASSE 1015; Cast copper alloy or FDA approved epoxy coated cast iron body with corrosion resistant internal parts and stainless steel springs; two independently operating check valves, test cocks and isolation valves.

E. Dual Check Valve with Intermediate Atmospheric Vent: ANSI/ASSE 1012; Brass body with corrosion resistant internal parts and stainless steel springs; two independently operating check valves with intermediate atmospheric vent.

F. ACCEPTABLE MANUFACTURERS:

1. Watts
2. Wilkins
3. Ames
4. Febco
5. Conbraco

2.4 WATER HAMMER ARRESTERS

A. Engineered water hammer arresters: ASSE 1010 listed, lead-free, pre-charged, permanently sealed, maintenance- free, suited for concealed installation, with a working temperature range of 33 to no less than 212 degrees F and a maximum working pressure of no less than 250 psi during pressure surges. Stainless steel or copper body construction. Shall be sized and located in accordance with Plumbing Drainage Institute standard PDI-WH 201.

B. ACCEPTABLE MANUFACTURERS:

1. J.R. Smith
2. Zurn
3. Mifab
4. Wade
5. Josam
6. P.P.P.
7. Sioux Chief

2.5 THERMOSTATIC MIXING VALVES

A. Provide thermostatic mixing valves in accordance with manufacturer's recommendations and as indicated and scheduled on Drawings.
   1. Unless scheduled otherwise, all units other than under-counter point of use units shall be provided complete in lockable cabinet of 16 gage (1.5 mm) prime coated steel when located in finished areas.
   2. All under-counter point of use units shall be provided complete with integral checks and dual stainless steel strainers on inlets for protection against fouling.

B. ACCEPTABLE MANUFACTURERS:

1. Bradley
2. Powers
3. Symmons
4. Acorn

2.6 FLOOR DRAINS AND FLOOR SINKS

A. Provide floor drains and floor sinks in accordance with manufacturer's recommendations, as appropriate for floor construction, and as indicated and scheduled on Drawings.

B. Provide clamping devices for all drains in membrane floor areas.

C. ACCEPTABLE MANUFACTURERS:

1. J.R. Smith
2. Zurn
3. Mifab
4. Watts
5. Wade
6. Josam

D. Provide drains of suitable and compatible material for specialized piping systems conveying acid waste.

2.7 CLEANOUTS

A. General: Provide cleanouts as indicated and scheduled on Drawings and also as required by the prevailing code, whether shown on the Drawings or not.

B. Construction: All cleanouts shall have tapered bronze plugs.

C. Provide clamping devices for all cleanouts in membrane floor areas.

D. Provide cleanouts of suitable and compatible material for specialized piping systems conveying acid waste.

E. Types:

1. Finished floor cleanouts: Provide cast iron body, with adjustable floor level assembly, and round nickel bronze scoriated top.
2. Resilient or tile finished floor cleanouts: Provide cast iron body, with adjustable floor level assembly, and round nickel-bronze top with gasketed water tight cover and depressed top to receive flooring finish material.
3. Interior finished wall cleanouts: Provide cast iron tee body or cleanout ferrule as required for wall construction and provide counter-sunk bronze plug with stainless steel access cover and securing screw(s).
4. Interior unfinished accessible cleanouts: Calked or threaded type. Provide bolted stack cleanouts on vertical rainwater leaders.

F. ACCEPTABLE MANUFACTURERS:

1. J.R. Smith
2. Zurn
3. Mifab

4. Watts
5. Wade
6. Josam

2.8 TRAP PRIMERS

A. General: Provide trap primers as indicated and scheduled on Drawings and in accordance with manufacturer's recommendations.

B. ACCEPTABLE MANUFACTURERS:

1. J.R. Smith
2. Zurn
3. Mifab
4. Watts
5. Wade
6. Josam
7. P.P.P.
8. Sioux Chief

2.9 INTERCEPTORS

A. Oil Interceptor – Precast Concrete

1. Construction: Refer to detail(s) on Drawings.
2. Provide buried installation in accordance with manufacturer's requirements. Provide complete with traffic rated access covers at finished elevation, complete with lid liners for odor control.
3. Unit Rating: Refer to Drawings for flow rating, connection sizes, and oil capacity.
4. ACCEPTABLE MANUFACTURERS:
   a. Park-USA
   b. Old Castle Precast

PART 3 - EXECUTION

3.1 INSTALLATION AND APPLICATION

A. Install specialties in accordance with manufacturer's instructions to provide intended performance.

B. The contractor shall provide water hammer arresters as shown on Drawings and also in accordance with PDI Standard WH-201, whether shown on Drawings or not. Water hammer arresters shall be PDI certified and sized and placed as recommended by manufacturer. Provide above lay-in ceiling, within chase or wall or above solid ceiling complete with access panel, or otherwise accessible location complete with isolation valve to facilitate replacement.

C. The use of air chambers for the control of water hammer shock shall not be acceptable.

D. Provide strainers at all backflow preventers.

E. Contractor shall certify all newly installed backflow preventers and provide proof of certification to the Owner.

F. Pipe relief line from backflow preventer via manufacturer's air gap assembly, full size to nearest drain. Such routing shall not pose a trip hazard.

G. All backflow preventers shall be securely supported with wall supports and/or pipe stands as appropriate for the size and weight of the unit and shall be installed with sufficient access and clearance for testing and maintenance. Unless specifically noted otherwise on Drawings, all backflow preventers shall be installed at 48”-60” above finished floor.

H. Extend cleanouts to finished floor or wall surface. Lubricate threaded cleanout plugs with mixture of graphite and linseed oil. Ensure clearance at cleanouts for rodding of drainage system.

I. All cleanouts outside of building on grade shall be set in an 18" x 18" x 4" thick concrete pad, flush with final grade/paving.

J. All cleanouts shall be the same nominal size as the pipe they serve, up to 4 inches. For pipes larger than 4 inches, provide a 4 inch cleanout.

K. Coordinate with casework to ensure that all interceptors are readily accessible and removable for servicing and cleaning.

L. Coordinate with casework to ensure that all point of use interceptors do not interfere with required accessibility requirements. Provide offset(s) as required and in accordance with code.

M. Provide approved sampling well downstream of centralized interceptors and separators.

END OF SECTION

SECTION 22 11 21 - NATURAL GAS PIPING SYSTEMS

PART 1 - GENERAL

1.1 GENERAL REQUIREMENTS

A. The requirements of the General Conditions and Supplementary Conditions apply to all work herein.

B. The Basic Materials and Methods, Section 22 02 00, are included as a part of this Section as though written in full in this document.

1.2 SCOPE

A. Scope of the Work shall include the furnishing, complete installation and testing of the gas piping system, with all metering, valves, piping and auxiliaries, ready for owner's use.

B. Coordinate with the gas company and pay all fees and permits required for a complete and operating gas service to the project.

PART 2 - PRODUCTS

2.1 All gas piping above ground shall be Schedule 40 black steel as manufactured by National Tube, Republic, Youngstown, or approved equal domestic manufacturer.

2.2 All gas piping larger than 2” shall be of welded construction. Screwed fittings will only be permitted for size 2" and smaller. Unions and valves will not be permitted above furred ceiling areas or in walls or chases.

2.3 All pipe fittings shall be of materials as follows:

A. All welding fittings shall be factory-made and shall be full line size, for each tee, branch, elbow, etc., with reducers after fittings, if required.

B. All screwed fittings shall be Crane, or approved equal, Class 150 malleable iron. Screw joints shall be made up with graphite and oil or Teflon tape. Screwed threads shall be in accordance with American Pipe Thread Standards.

C. All piping and fittings shall be from a domestic manufacturer.

2.4 All underground gas piping with 5 pound working pressure or less shall be as follows:

A. The pipe shall be yellow polyethylene with socket heat fusion joints and fittings. Pipe sizes 1-1/2" and 2" shall be SDR 11, (PE 2406) and pipe sizes 3" and 4" shall be SDR 11.5 (PE 2406).

B. All socket heat fusion fittings shall be D.O.T. approved and meet ASTM D-2513 and ANSI B31.8 codes.

C. All gas valves shall be polyethylene ball type, doubled union, rated for natural gas use. All valves shall be placed in a cast-iron valve box of an adequate size for accessibility and maintenance.

D. All transition meter risers shall be D.O.T. approved anode-less service type, fusion coupled and PE 2406 rated.

E. The contractor shall take thermal expansion under consideration during installation. The contractor shall follow all requirements set by the manufacturer to protect the system from damage due to thermal expansion.

F. The contractor shall provide detector tape approximately 12" above all gas piping.

G. Wrap pipe with 18 gauge minimum copper tracer wire.

2.5 Gas piping installed in unventilated spaces shall be routed in properly vented continuous sleeve where required by the building code.

2.6 Gas valves shall be U.L. listed as follows:

A. Ball Valves: Nibco T585-70-UL for ¼" to 1" and T580-70-UL for 1-¼" to 3".

B. Plug Valves: DeZurick Series 425 or 435 Eccentric valves with RS 49 plug seals.

2.7 Gas pressure regulators shall be capable of reducing 75 psi pressure gas to 0.5 psi gas at capacities required by Gas Demand. Install per A.G.A. Bulletin 90. Regulators shall be as manufactured by Rockwell, Fisher-Governor or approved equal.

2.8 All gas regulators located inside the building shall be vented to atmosphere with schedule 40 black steel pipe. This includes all regulators provided with mechanical and plumbing equipment and all other regulators provided under this contract. Vent piping shall be the full size of regulatory port opening, or as recommended by regulator manufacturer, and shall run independent of any other regulator vent through to point of termination.

PART 3 - EXECUTION

3.1 All piping shall be installed in accordance with the manufacturer's recommendations and printed installation instructions.

3.2 All items required for a complete and proper installation are not necessarily indicated on the plans or in the specifications. Provide all items required as per manufacturer's requirements.

3.3 All underground gas piping shall be laid on 6" of wet compact banksand approximately 24" below grade. Backfill trench with wet compacted banksand to 6" above pipe. The remainder of backfill shall be selected backfill and shall meet all compaction requirements set forth by the general trenching and backfill requirements.

3.4 Provide lever handle gas valve, drip leg and union to each piece of equipment and where indicated.

3.5 All gas lines entering building shall be valved on the exterior of the building above grade.

PART 4 - TESTING

4.1 TESTING OF GAS PIPING SYSTEMS

A. All gas system testing shall be in compliance with local codes or as required in NFPA 54 National Fuel Gas Code whichever is the more stringent requirement.

B. All work shall be performed by a Journeyman Plumber holding current State and local licenses.

C. All tests shall be accomplished during normal working hours and after having given due notification to building owner, construction manager or designee, of tests to be performed. All tests shall be performed in the presence of and witnessed by the building owners representative or designee

D. All gas system piping shall be subjected to a pneumatic test pressure of 60 psig for not less than 2 hours upon completion of all rough-in work and prior to covering. While the systems are subjected to this air pressure test, all joints shall have a soapy water solution applied and shall be observed for leaks. During test period there shall be no perceptible drop in test gage pressure

E. A final test shall be performed after all portions of the piping system are completely installed and covered. The entire system shall be tested, with all system outlets plugged or capped, before any equipment or appliances are connected to the piping.

1. Final test shall be with mercury, measured with a manometer or slope gage. Test pressures shall in no case be less than one and one half times the normal operating pressure or as listed below; which ever is the greater:
   a. 10.5 inches mercury (5 psig) for 4 ounce system.
   b. 21.0 inches mercury (10 psig) for 8 ounce system.
2. Tests shall be for a period of not less than 30 minutes and shall prove absolutely tight, showing no perceptible drop, for the entire test period.

F. Purge air from test piping before connecting equipment or appliances. Purge air to outdoors or to ventilated space of sufficient volume to prevent accumulation of flammable mixtures.

END OF SECTION

SECTION 22 30 00 - PLUMBING EQUIPMENT

PART 1 - GENERAL

1.1 SECTION INCLUDES

A. Water Heaters.

B. Packaged water heating systems

C. Hot water storage tanks.

D. Water softeners.

E. In-line circulator pumps.

F. Water pressure booster system.

G. Sump Pumps

1.2 RELATED SECTIONS

A. Section 11400 - Food Services Equipment.

B. Section 22 05 29 – Hangers and Support for Plumbing Piping and Equipment.

C. Section 22 05 48 – Vibration and Seismic Controls for Plumbing Equipment.

D. Section 22 10 00 - Plumbing Piping.

E. Section 22 11 19 - Plumbing Specialties.

F. Section 26 05 19 - Wire, Cable, and Related Materials.

1.3 REFERENCES

A. ANSI/ASHRAE 90A - Energy Conservation in New Building Design.

B. ASME Section VIIID - Pressure Vessels; Boiler and Pressure Vessel Codes.

C. ANSI/NFPA 54 - National Fuel Gas Code.

D. ANSI/NFPA 70 - National Electrical Code.

E. ANSI/UL 1453 - Electric Booster and Commercial Storage Tank Water Heaters.

1.4 SUBMITTALS

A. Submit under provisions of Division One.

B. Shop Drawings:

1. Include water heater dimensions. size of tappings, and performance data.
2. Include dimensions of tanks, tank lining methods, anchors, attachments, lifting points, tappings, and drains.

C. Product Data:

1. Include dimension drawings of water heaters indicating components and connections to other equipment and piping.
2. Indicate pump type, capacity, power requirements, and affected adjacent construction.
3. Submit certified pump curves showing pump performance characteristics with pump and system operating point plotted. Include NPSH curve when applicable.
4. Provide electrical characteristics and connection requirements.

D. Manufacturer's Installation Instructions.

1.5 OPERATION AND MAINTENANCE DATA

A. Submit under provisions of Division 22.

B. Include operation, maintenance, and inspection data, replacement part numbers and availability, and service depot location and telephone number.

1.6 QUALITY ASSURANCE

A. Perform Work in accordance with authorities having jurisdiction.

B. Provide pumps with manufacturer's name, model number, and rating/capacity identified.

C. Ensure products and installation of specified products are in conformance with recommendations and requirements of the following organizations:

1. American Gas Association (AGA).
2. National Sanitation Foundation (NSF).
3. American Society of Mechanical Engineers (ASME).
4. National Board of Boiler and Pressure Vessel Inspectors (NBBPVI).
5. National Electrical Manufacturers' Association (NEMA).
6. Underwriters Laboratories (UL).
7. American Society of Plumbing Engineers (ASPE)

D. Ensure pumps operate at specified system fluid temperatures without vapor binding and cavitation, are non-overloading in parallel or individual operation, operate within 25 percent of midpoint of published maximum efficiency curve.

1.7 REGULATORY REQUIREMENTS

A. Conform to AGA NSF ANSI/NFPA 54 ANSI/NFPA 70 ANSI/UL 1453 requirements for water heaters.

B. Conform to ASME Section VIIID for manufacture of pressure vessels for heat exchangers.

1.8 DELIVERY, STORAGE, AND HANDLING

A. Deliver, store, protect and handle products to site under provisions of Section Division One.

B. Provide temporary inlet and outlet caps. Maintain caps in place until installation.

1.9 WARRANTY

A. Provide five year warranty under provisions of Division One.

B. Warranty: Include coverage of domestic water heaters, water storage tanks, and packaged water heating systems.

1.10 EXTRA MATERIALS

A. Furnish under provisions of Division One.

B. Provide two sets of electric heater elements.

1.11 OPERATIONS PERSONNEL TRAINING

A. Provide a training session for the owner's operations personnel. Training session shall be performed by a qualified person who is knowledgeable in the subject system/equipment. Submit a training agenda two weeks prior to the proposed training session for review and approval. Training session shall include at the minimum:

1. Purpose of equipment.
2. Principle of how the equipment works
3. Important parts and assemblies
4. How the equipment achieves its purpose and necessary operating conditions
5. Most likely failure modes, causes and corrections
6. On site demonstration

PART 2 - PRODUCTS

2.1 RESIDENTIAL GAS FIRED WATER HEATER

A. Manufacturers:

1. A.O. Smith.
2. Other acceptable manufacturers offering equivalent products.
   a. Rheem.
   b. State.
   c. Lochinvar.
   d. Bradford White.

B. Type: Automatic, natural gas-fired, vertical storage.

C. Tank: Glass lined welded steel with single flue passage, flue baffle and draft hood; thermally insulated with glass fiber and encased in corrosion-resistant steel jacket; baked-on enamel finish; floor shield and legs.

D. Controls: Automatic water thermostat and built-in gas pressure regulator; temperature range adjustable from 120 to 170 degrees F (49 to 77 degrees C), cast iron or sheet metal burner, safety pilot and thermocouple.

E. Accessories: Brass water connections and dip tube, drain valve, high density magnesium anode, and ASME temperature and pressure relief valve.

2.2 COMMERCIAL GAS FIRED WATER HEATER

A. Manufacturers:

1. A.O. Smith
2. Other acceptable manufacturers offering equivalent products.
   a. State
   b. Bock
   c. Rheem
   d. Bradford White

B. Type: Automatic, natural gas-fired, vertical storage.

C. Tank: Glass lined welded steel ASME labeled; multiple flu passages, 4 inch diameter inspection port (when applicable), thermally insulated with minimum 2 inches glass fiber, encased in corrosion-resistant steel jacket; baked-on enamel finish; floor shield and legs.

D. Accessories: Brass water connections and dip tube, drain valve, high-density magnesium anode, and ASME rated temperature and pressure relief valve.

E. Approval: By AGA as automatic storage water heater and automatic circulating tank water heater for operation at 180 degrees F.

F. Controls: Automatic direct immersion thermostat with temperature range adjustable minimum 175 degrees F, differential, automatic reset high temperature limiting thermostat, factory set at 205 degrees F, gas pressure regulator, multi-ribbon or tubular burner, 100 percent safety shut-off pilot and thermocouple, intermittent electronic ignition monitoring pilot and main flame, trial for re-ignition for momentary loss of flame, shut down of pilot and main burner in 2-4 seconds after loss of flame, and automatic flue damper and power venter.

G. Provide training per 1.11.

2.3 RESIDENTIAL ELECTRIC WATER HEATER

A. Manufacturers:

1. A.O. Smith.
2. Other acceptable manufacturers offering equivalent products.
   a. Rheem.
   b. State.
   c. Lochinvar.
   d. Bradford White

B. Type: Automatic, electric, vertical storage.

C. Tank: Glass lined welded steel, thermally insulated with 2 inch thick glass fiber; encased in corrosion-resistant steel jacket; baked-on enamel finish.

D. Controls: Automatic water thermostat with externally adjustable temperature range from 120 to 170 degrees F, flanged or screw-in nichrome elements, enclosed controls and electrical junction box.

E. Accessories: Brass water connections and dip tube, drain valve, high- density magnesium anode, and ASME temperature and pressure relief valve.

2.4 COMMERCIAL ELECTRIC WATER HEATERS

A. Manufacturers:

1. A.O. Smith
2. Other acceptable manufacturers offering equivalent products.
   a. State
   b. Rheem.
   c. Bradford White.
   d. Bock.

B. Type: Factory-assembled and wired, electric, vertical storage.

C. Tank: Glass lined welded steel; 4 inch diameter inspection port (when applicable), thermally insulated with minimum 2 inches glass fiber encased in corrosion-resistant steel jacket; baked-on enamel finish.

D. Controls: Automatic immersion water thermostat; externally adjustable temperature range from 60 to 180 degrees F, flanged or screw-in nichrome elements, high temperature limit thermostat.

E. Accessories: Brass water connections and dip tube, drain valve, high-density magnesium anode, and ASME rated temperature and pressure relief valve.

F. Provide training per 1.11.

2.5 DIAPHRAGM-TYPE COMPRESSION TANKS

A. Manufacturer:

1. Taco.
2. Other acceptable manufacturers offering equivalent products.
   a. Watts.
   b. Bell and Gossett.

B. Construction: Welded steel, tested and stamped in accordance with Section 8D of ASME Code; supplied with National Board Form U-1, rated for working pressure of 125 psig, with flexible EPDM diaphragm sealed into tank, and steel legs or saddles.

C. Accessories: Pressure gage and air-charging fitting, tank drain; pre-charge to 12 psig.

2.6 IN-LINE CIRCULATOR PUMPS

A. Manufacturers:

1. Bell & Gossett.
2. Other acceptable manufacturers offering equivalent products.
   a. TACO.
   b. Grundfos.
   c. Armstrong

B. Casing: Bronze, rated for 125 psig working pressure.

C. Impeller: Bronze.

D. Shaft: Alloy steel with integral thrust collar and two oil lubricated bronze sleeve bearings.

E. Seal: Carbon rotating against a stationary ceramic seat.

F. Drive: Flexible coupling.

2.7 PRESSURE BOOSTER SYSTEMS

A. Manufacturers:

1. Grundfos
2. Other acceptable manufacturers offering equivalent products.
   a. Bell & Gossett
   b. Canariis
   c. Armstrong

B. System: Packaged with two pumps, factory assembled, tested, and adjusted; shipped to site as integral unit; consisting of pumps, valves, and galvanized piping, with control panel assembled on fabricated steel base with structural steel framework.

C. Controls and Instruments: Locate in NEMA 250 Type 1 general purpose enclosure with main disconnect interlocked with door, fused circuit for each motor, magnetic starters with three overloads, control circuit transformer with fuse protection, selector switch for each pump, low limit pressure switch, low pressure alarm light, running lights, current sensing devices, minimum run timers, manual alternation of lead pump, and suction and discharge pressure gages.

1. Provide with BACnet/IP communications interface for connection to EMCS.

D. Lead Pump: Operate for a minimum of five minutes with lag pump starting on system demand. Should lead pump fail to operate, next pump in sequence shall start automatically.

E. Time Delay Relay: Prevent lag pump short cycling (5 minutes minimum) on fluctuating demands.

F. Thermal Bleed Circuit with Solenoid Valve: Prevent overheating during low demand. Pipe relief to drain.

G. Low Pressure Control: Stop pump operation if incoming water pressure drops to atmospheric.

H. Pump Switch: Permit manual or automatic operation.

I. Valving: System discharge combination pressure reducing and check valve to maintain constant system pressure. Provide gate or butterfly valves on suction and discharge of each pump. Provide check valve on each pump discharge.

J. Time Clock for Automatic Day-Night Changeover:

1. Day cycle: System shall operate continuously with pressure to fixtures maintained by pressure reducing valves.
2. Night Cycle: Pumps shall operate intermittently on pressure switch located near pressure tank operating pump for pre-determined adjustable time period.

K. Manufacturer to provide supervise start-up and submit start-up report for review.

2.8 SUBMERSIBLE SUMP PUMPS

A. Manufacturers:

1. Weil.
2. Other acceptable manufacturers offering equivalent products.
   a. Aurora.
   b. Chicago
   c. Myers

B. Type: Completely submersible vertical centrifugal.

C. Casing: Cast iron pump body and oil filled motor chamber totally enclosed.

D. Impeller: Bronze; closed, stainless steel shaft.

E. Bearings: Ball bearings.

F. Accessories: Oil resistant 6 foot cord and plug with three-prong connector for connection to electric wiring system including grounding connector. Gas tight steel cover with openings for discharge piping, float rods, conduit and an accessible manhole cover.

G. Servicing: Slide-away coupling consisting of discharge elbow secure to sump floor, movable bracket, guide pipe system, lifting chain and chain hooks. Design shall permit removal of motor-shaft-impeller assembly without disconnecting piping or removing pump casing from the basin.

H. Motor control panel containing across-the-line electric motor starters with ambient compensated quick trip overloads in each phase with manual trip button and reset button, circuit breaker, control transformer, electro mechanical alternator, hand-off-automatic selector switches, pilot lights, high water alarm pilot light, reset button and alarm horn. Provide an auxiliary set of contacts for connection or remote alarm circuit. Provide mercury switch liquid level controls, steel shell switch encased in polyurethane foam with cast iron weight for pump on (each pump), pump off (common), and alarm.

   1. Provide relay outputs to EMCS for pump alarm and high water level.

I. Provide training per 1.11.

PART 3 - EXECUTION

3.1 WATER HEATER INSTALLATION

A. Install water heaters in accordance with manufacturer's instructions and to AGA NSF ANSI/NFPA 54 UL requirements.

B. Coordinate with plumbing piping and related work to achieve operating system.

3.2 PUMP INSTALLATION

A. Install in accordance with manufacturer's instructions.

B. Ensure shaft length allows sump pumps to be located minimum 24 inches below lowest invert into sump pit and minimum 6 inches clearance from bottom of sump pit.

C. Provide air cock and drain connection on horizontal pump casings.

D. Provide line sized isolating valve and strainer on suction and line sized soft seated check valve and balancing valve on discharge.

E. Decrease from line size with long radius reducing elbows or reducers. Support piping adjacent to pump such that no weight is carried on pump casings. Provide supports under elbows on pump suction and discharge line sizes 4 inches and over.

F. Ensure pumps operate at specified system fluid temperatures without vapor binding and cavitation, are non-overloading in parallel or individual operation, and operate within 25 percent of midpoint of published maximum efficiency curve.

G. Align and verify alignment of base mounted pumps prior to start-up. Provide alignment certificate to engineer prior to start-up.

END OF SECTION

SECTION 22 40 00 - PLUMBING FIXTURES

PART 1 - GENERAL

1.1 GENERAL REQUIREMENTS

A. The requirements of the General Conditions and Supplementary Conditions apply to all work herein.

B. The Basic Materials and Methods, Section 22 02 00, are included as a part of this Section as though written in full in this document.

1.2 SCOPE

A. The scope of the work shall include the furnishing and complete installation of the fixtures covered by this Section, with all appurtenances, ready for the Owner's use.

B. Include the following work in addition to items normally part of this Section:

1. Plumbing Fixtures
2. Fixture Carriers
3. Faucets, Supplies, and Trim
4. Flushometers

1.3 RELATED WORK

A. Section 22 05 29 – Hangers and Support for Plumbing Piping and Equipment

B. Section 22 10 00 – Plumbing Piping

C. Section 22 11 19 – Plumbing Specialties

D. Section 22 30 00 – Plumbing Equipment

1.4 REFERENCES

A. ASME A112.4.3 – Plastic Fittings for Connecting Water Closets to the Sanitary Drainage System

B. ASME A112.6.1M – Floor Affixed Supports for Off-the-Floor Plumbing Fixtures for Public Use

C. ASME A112.18.1 – Plumbing Supply Fittings

D. ASME A112.18.2 – Plumbing Waste Fittings

E. ASME A112.18.9 – Protectors/Insulators for Exposed Waste and Supplies on Accessible Fixtures

F. ASME A112.19.1 – Enameled Cast Iron and Enameled Steel Plumbing Fixtures

G. ASME A112.19.2 – Ceramic Plumbing Fixtures

H. ASME A112.19.3 – Stainless Steel Plumbing Fixtures

I. ASME A112.19.7 – Hydromassage Bathtub Systems

J. NSF/ANSI 61 – Drinking Water System Components – Health Effects

K. ANSI Z358.1 – Emergency Eyewash and Shower Equipment

L. ASSE 1016 – Performance Requirements for Individual Thermostatic, Pressure Balancing, and Combination Pressure Balancing and Thermostatic Control Valves for Individual Fixture Fittings.

M. ASSE 1037 – Performance Requirements for Pressurized Flushing Devices for Plumbing Fixtures

N. ADA (Americans with Disabilities Act)

O. TAS (Texas Accessibility Standards)

1.5 QUALITY ASSURANCE

A. Manufacturer: For each product specified, provide components by the same manufacturer throughout.

B. Warranty: Warrant the work specified herein for one year against becoming unserviceable or causing an objectionable appearance resulting from defective or non-conforming materials and workmanship.

C. Defects shall include, but not necessarily be limited to, the following:

1. Noisy operation.
2. Noticeable deterioration of finish.
3. Leakage of water.

1.6 SUBMITTALS

A. Submit under provisions of Division One.

B. Submit product data under provisions of Division One.

C. Include component sizes, rough-in requirements, service sizes, finishes, materials, dimensions, performance information, and accessories.

D. Manufacturer’s Installation Instructions: Indicate assembly and support requirements.

1.7 OPERATION AND MAINTENANCE DATA

A. Submit under provisions of Division One.

B. Provide pre-printed operating and maintenance instructions for each item specified. Instruct and demonstrate the proper operation and maintenance to the Owner's designated representative.

1.8 DELIVERY, STORAGE, AND HANDLING

A. DELIVERY: Deliver clearly labeled specialties to; and store, protect and handle products on site in accordance with the provisions of Division One.

B. TIMING AND COORDINATION: Arrange for delivery of materials to allow for minimum storage time at the project site. Coordinate with the scheduled time of installation.

C. ACCEPTANCE: Accept specialties on site in original factory packaging. Inspect for damage. Damaged specialties shall not be acceptable.

D. STORAGE: Store materials in a clean, dry location, protected from weather and damage.

1.9 FIELD MEASUREMENTS

A. Verify that field measurements are as indicated on the Contract Documents.

B. Confirm and field coordinate that millwork is constructed with adequate provisions for the installation of counter top lavatories and sinks.

PART 2 - PRODUCTS

2.1 PLUMBING FIXTURES

A. GENERAL: Provide plumbing fixtures in accordance with manufacturer's recommendations and as indicated and scheduled on Drawings. Acceptable manufacturers of each fixture type are as indicated below.

1. Provide floor-affixed fixture carriers as appropriate for all wall-hung plumbing fixtures unless specifically noted otherwise.
2. Fixture drilling shall match faucet spread and match any related trim and accessories.

B. WATER CLOSETS, URINALS, LAVATORIES (Vitreous China)

1. American Standard
2. Kohler
3. Zurn
4. Sloan
5. Toto

C. WATER CLOSETS, URINALS, LAVATORIES, COMBINATION UNITS (Stainless Steel, Security Fixtures)

1. Acorn
2. Willoughby

D. SINKS – COUNTER MOUNTED (Stainless Steel)

1. Elkay
2. Just
3. Moen Commercial

E. SINKS – FREESTANDING (Stainless Steel)

1. Elkay
2. Just
3. Advance Tabco
4. Amtekco Industries

F. BATHTUBS

1. American Standard
2. Kohler
3. Toto

G. SHOWER ENCLOSURES

1. Comfort Designs
2. Aquarius Bathware
3. Hamilton Bathware

H. MOP SINKS

1. Stern-Williams
2. Fiat
3. E.L. Mustee & Sons

I. EMERGENCY SAFETY FIXTURES

1. Bradley
2. Guardian
3. Chicago
4. Haws
5. Speakman

2.2 FAUCETS, SUPPLIES, AND TRIM

A. GENERAL: Provide faucets, supplies, and trim in accordance with manufacturer's recommendations, as appropriate for fixtures to be served, and as indicated and scheduled on Drawings. Acceptable manufacturers for each type of appurtenance are as indicated below.

1. Flushometer flush rate shall match gallon-per-flush criteria of fixtures served.
2. Strainers shall be heavy cast brass chrome plated with matching grid type strainer, with or without overflow as required, 17 gauge seamless brass tailpiece of length determined by installation requirements. Provide complete with washers and brass locknut.
3. P-traps shall be 17 gauge seamless chrome plated brass, adjustable type. Provide complete with cleanout plug, chrome plated brass slip nuts, wall bend, and wrought brass escutcheon of depth determined by installation requirements.
4. Angle stops shall be lead-free commercial pattern chrome plated brass, quarter turn ball type with loose key handles. Provide complete with chrome plated copper supply risers and wrought brass escutcheon of depth determined by installation requirements.
5. Toilet seats shall be commercial grade and provided complete with stainless steel posts and self-sustaining check hinges.
6. Pipe trim insulation shall be compliant, white molded vinyl, fade/discoloration-resistant, bacteria/fungal-resistant insulation.

B. FAUCETS

1. Chicago
2. T&S Brass
3. Zurn
4. Moen Commercial

5. Delta Commercial
6. American Standard
7. Kohler
8. Symmons Commercial
9. Speakman

C. SHOWER VALVES

1. Acorn
2. Bradley
3. Symmons Commercial
4. Chicago
5. Powers
6. Zurn
7. Speakman

D. FLUSHOMETERS

1. Sloan
2. Zurn
3. Moen Commercial
4. Delta Commercial
5. American Standard
6. Toto

E. SUPPLY STOPS

1. McGuire
2. Zurn
3. Chicago

F. CHROME PLATED TUBULAR BRASS

1. McGuire
2. Zurn
3. Kohler

G. TOILET SEATS

1. Church
2. Bemis
3. American Standard
4. Zurn
5. Toto

H. PIPE TRIM INSULATION

1. Truebro
2. McGuire
3. Plumberex

2.3 FIXTURE CARRIERS

A. GENERAL: ANSI/ ASME A112.6.1M; Provide floor-affixed fixture carriers as appropriate for all wall-hung plumbing fixtures unless specifically noted otherwise. Fixture carrier foot supports shall be securely anchored to the floor with 1/2” bolts and anchors at all locations.

1. Chair type carriers shall be adjustable, with coated cast iron body with integral no hub waste and vent connections, complete with gasketed adjustable faceplate assembly, adjustable nipple with test cap, neoprene bowl gasket, lugs for floor and wall attachment, threaded fixture studs, and hardware. Provide single or double type of vertical or horizontal configuration as required and with auxiliary inlet as required.
2. Lavatory carriers shall be adjustable, with steel uprights and welded base feet, coated cast iron support brackets, cast or ductile iron concealed support arms, alignment rod, complete with leveling and support hardware. Provide single or back to back configuration as required.
3. Drinking fountain and urinal carriers shall be adjustable, with steel uprights and welded base feet, upper and lower bearing plates, threaded rods, and mounting hardware. Provide single or side-by-side configuration as required

B. ACCEPTABLE MANUFACTURERS

1. J.R. Smith
2. Zurn
3. Mifab
4. Watts
5. Wade
6. Josam

PART 3 – EXECUTION

3.1 PREPARATION

A. EXAMINATION OF CONDITIONS: Examine conditions affecting this work. Report unsatisfactory conditions to the proper authority and do not proceed until those conditions have been corrected. Commencing work implies acceptance of existing conditions as satisfactory to the outcome of this work.

B. Coordinate forming of roof and floor construction to receive drains to required invert elevations.

3.2 INSTALLATION

A. Install fixtures in locations and heights as shown on Drawings and as directed by the Architect.

B. Install materials plumb, level, securely, and in accordance with manufacturer's recommendations.

C. All rough-in pipe openings for final connections with supply, waste, vent, and storm systems shall be closed with caps or plugs during early stages of construction and installation. Tape shall not be considered sufficient protection.

D. Rough-in fixture piping connections in accordance with minimum sizes indicated in fixture rough-in schedule for particular fixtures.

E. Provide ball valves in piping serving batteries of fixtures. Label stops "Hot" and "Cold." Valves shall be located above accessible ceilings. If ceilings are not accessible, provide access panels of adequate size to ensure valves are fully accessible and can be fully operated.

F. Provide lockable ball valves in piping serving emergency safety fixtures and clearly label such valves as to the fixtures served.

G. Plumbing fixtures shall be supported by a concealed carrier where required to properly support the fixture specified. All carriers to be securely mounted, bolted and checked prior to concealment.

H. Caulk around fixtures with best grade white silicone caulking. Do not use grout.

I. All handles on supply and drainage fittings or other brass items shall be properly lined up and adjusted. Fittings shall not be left in any haphazard manner.

J. All fixtures shall have individual chrome plated heavy pattern loose key quarter-turn cutoff stops on supply lines, complete with escutcheons. Where same are not specified as a part of the fixture trim, they shall be installed as close to fixtures as possible in the hot and cold water supply.

K. Install each fixture with trap, easily removable for servicing and cleaning.

L. All showers and similar installations shall be installed with type “L” copper pipe between shower valve and shower head rough-in. The termination point shall have a brass drop ear elbow for shower head arm connection. Contractor shall provide proper anchoring support.

3.3 INTERFACE WITH OTHER PRODUCTS

A. Review millwork shop drawings. Confirm location and size of fixtures and openings before rough-in and installation.

B. Review architectural drawings. Confirm configuration and orientation of shower controls and trim prior to rough-in and installation.

3.4 ADJUSTING

A. Adjust work under provisions of Division One.

B. Adjust stops or valves for intended water flow rate to fixtures without splashing, noise, or overflow.

3.5 CLEANING

A. Clean work under provisions of Division One.

B. At completion clean plumbing fixtures and appurtenances.

3.6 PROTECTION OF FINISHED WORK

A. Protect finished Work under provisions of Division One.

B. Do not permit use of fixtures.

3.7 ADA ACCESSIBLE FIXTURES

A. At all locations required to be accessible, such fixtures, controls, and final installations shall comply with the requirements of ADA and any applicable state accessibility standards. Install fixtures to heights, indicated on architectural drawings.

B. All exposed water supply and drain pipes under accessible lavatories and sinks shall be insulated with securely fastened pipe trim insulation kits of the proper model for the fixtures specified.

C. Wall mounted drinking fountains and coolers which protrude into passages or corridor space, whether single or paired with an adjacent accessible fixture, shall be supplied with a matching skirt or apron to lower the underside clearance of the non-accessible fixture equal to that required for accessible fixture.

END OF SECTION

SECTION 22 61 00 - COMPRESSED AIR SYSTEMS

PART 1 - GENERAL

1.1 RELATED DOCUMENTS

A. Drawings and general provisions of Contract, including General and Supplementary Conditions and Division-1 Specification sections, apply to work of this section.

B. Division-15 Basic Mechanical Materials and Methods sections apply to work of this section.

1.2 DESCRIPTION OF WORK

A. Extent of compressed air systems work, is indicated on drawings and schedules, and by requirements of this section.

B. Refer to Division-16 sections for the following work; not work of this section.

1. Power supply wiring from power source to power connection on compressed air equipment. Include starters, disconnects, and required electrical devices, except where specified as furnished, or factory-installed, by manufacturer.
2. Interlock wiring between electrically-operated compressed air equipment units; and between equipment and field-installed control devices.
   a. Interlock wiring specified as factory-installed is work of this section.

C. Provide the following electrical work as work of this section, complying with requirements of Division-16 sections:

1. Control wiring between field-installed controls, indicating devices, and unit control panels.

1.3 QUALITY ASSURANCE

A. Manufacturer's Qualifications: Firms regularly engaged in manufacture of compressed air systems equipment and products, of types, materials, and sizes required, whose products have been in satisfactory use in similar service for not less than 5 years.

B. Installer Qualifications: Firm with at least 3 years of successful installation experience on projects with compressed air systems work similar to that required for project.

C. Codes and Standards:

1. ASME Compliance: Provide compressed air pressure vessels and relief valves in accordance with ASME "Boiler and Pressure Vessel Code"; provide ASME Code Symbol Stamp.
2. ASME Compliance: Fabricate and install compressed air systems in accordance with ASME B31.9 "Building Services Piping".
3. CGA Compliance: Fabricate and install compressed air systems in accordance with CGA Standards (Compressed Gas Association).
4. UL Compliance: Provide electrical components which are UL listed and have UL label affixed.

1.4 SUBMITTALS

A. Product Data: Submit manufacturer's technical product data and installation instructions for compressed air systems materials and products.

B. Record Drawings: At project closeout, submit record drawings of installed piping, and compressed air systems products; in accordance with requirements of Division 1.

C. Wiring Diagrams: Submit manufacturer's electrical requirements for power supply wiring to units. Submit manufacturer's ladder-type wiring diagrams for interlock and control wiring. Clearly differentiate between portions of wiring that are factory-installed and portions to be field-installed.

D. Maintenance Data: Submit maintenance data and parts lists for compressed air systems materials and products. Include this data, product data, shop drawings, record drawings, and wiring diagrams in maintenance manual; in accordance with requirements of Division 1.

1.5 DELIVERY, STORAGE, AND HANDLING

A. Deliver compressed air equipment, including compressed air dryers and receiver tanks with factory-installed skid; with accessories as scheduled on the plans.

PART 2 - PRODUCTS

2.1 ACCEPTABLE MANUFACTURERS

A. Saylor – Beall

B. Ingersoll – Ran

C. Champion

2.2 BASIC IDENTIFICATION

A. General: Provide identification complying with Division-15 Basic Mechanical Materials and Methods section "Mechanical Identification", in accordance with the following listing:

1. Piping Above Ground: Plastic pipe markers.
2. Valves: Plastic valve tags.

2.3 BASIC PIPES AND PIPE FITTINGS

A. General: Provide pipes and pipe fittings complying with Division-15 Basic Mechanical Materials and Methods.

B. All Sizes: Copper tube, hard-temper for exposed locations, soft-temper for underground and concealed locations; Type "L"; wrought-copper, solder-joint fittings

2.4 BASIC SUPPORTS AND ANCHORS

A. General: Provide supports and anchors, complying with Division-15 Basic Mechanical Materials and Methods section "Supports and Anchors", in accordance with the following listing:

1. Extension split pipe clamp, copper plated, hinged or 2-bolt for pipe support from any substrate.

2.5 VALVES

A. Shutoff Valves: Provide compressed air shutoff valves, bronze-body, double seal, full port, union ball type, with seat seals and stem seals. Design so quarter turn of lever-type valve handle is maximum travel between open and closed positions. Design for working pressure of 300 psi minimum. Provide valves with color-coded gas identification labels.

2.6 BASIC VIBRATION CONTROL

A. General: Provide vibration control products complying with Division-15 Basic Mechanical Materials and Methods section "Vibration Control", in accordance with the following listing:

2.7 COMPRESSED AIR EQUIPMENT AND ACCESSORIES

A. General: Provide air compressor system, size as specified on drawings.

B. The air compressor system shall be of a single point connection, base mounted design consisting of two compressor, two motors, and regulator, integral pre-wired control panel and corrosion resistant air receiver. The complete package shall be pre-wired, pre-piped, and assembled on one common base with single point connection for electrical.

C. Compressor Module: The compressor shall be a continuous duty rated. The design shall be single stage, air-cooled, rated for 120 psig discharge pressure. The compressor shall be v-belt driven with totally enclosed belt guard. The drive motor shall be a NEMA rated, open drip proof, 3600 RPM, with 1.15 service factor suitable for 208 or 230/460V electrical service.

D. Isolation System: The compressor and motor shall be fully isolated from the air receiver by means of a four point spring isolation system.

E. Air Receiver: The vertical air receiver shall be corrosion resistant, ASME coded, National Board Certified, rated for a minimum 150 psig design pressure, and include a liquid level gauge glass, safety relief valve, manual drain valve, and a timed automatic solenoid drain valve.

F. Dryer System: The air drying system shall consist of a hi – temp refrigerated type. The dryer shall be individually sized for peak calculated demand and capable as scheduled on the plans.

G. Control System: The duplex mounted and wired control system shall be NEMA 12 and U.L. labeled. This control system shall provide automatic lead/lag sequencing with circuit breaker disconnects for each compressor with external operators, full voltage motor starters with overload protection, redundant 120V control circuit transformers, visual and audible unit alarm with isolated contacts for remote alarm, hand-off-auto lighted selector switches, pressure gauge, and duplexed runtime hour meters. Automatic alternation of both compressors based on a first-on/first-off principle, with provisions for simultaneous operation if required, automatic activation of reserve unit if required, visual and audible alarm indication for high discharge air temperature shutdown with isolated contacts for remote alarm shall be included.

PART 1 - EXECUTION

3.1 INSPECTION

A. Examine areas and conditions under which compressed air systems and equipment are to be installed. Do not proceed with work until unsatisfactory conditions have been corrected in manner acceptable to Installer.

3.2 INSTALLATION OF BASIC IDENTIFICATION

A. General: Install mechanical identification in accordance with Division-15 Basic Mechanical Materials and Methods section "Mechanical Identification".

3.3 INSTALLATION OF COMPRESSED AIR PIPING

A. General: Install piping in accordance with Division- 15 Basic Mechanical Materials and Methods section "Pipes and Pipe Fittings".

3.4 INSTALLATION OF SUPPORTS AND ANCHORS

A. Install supports and anchors, in accordance with Division-15 Basic Mechanical Materials and Methods section "Supports and Anchors". Locate spacing for supports and anchors in accordance with piping manufacturer's recommendations.
B. Support Spacing: Install piping supports at the following maximum intervals:

1. 1/2" Pipe Size: 6' o.c.
2. 3/4" to 1" Pipe Size: 8' o.c.
3. 1-1/4" or Larger Pipe Size: 10' o.c.
4. Vertical Piping: Every floor level.

3.5 INSTALLATION OF VALVES

A. Shutoff Valves: Provide shutoff valves where indicated, on plans.

3.6 INSTALLATION OF EQUIPMENT AND ACCESSORIES

A. Install equipment and accessories where indicated, in accordance with equipment manufacturer's written instructions, and with recognized industry practices, to ensure that compressed air equipment and accessories comply with requirements and serve intended purposes.

B. Coordinate with other work including plumbing, as necessary to interface installation of compressed air piping and equipment with other work.

C. Support: Install equipment on 4" high reinforced concrete pads, 4" larger on each side than equipment base. Cast anchor bolt inserts into pad.

D. Electrical Wiring: Install electrical devices furnished by manufacturer but not specified to be factory-mounted. Furnish copy of manufacturer's wiring diagram submittal to Electrical Installer.

1. Verify that electrical wiring installation is in accordance with manufacturer's submittal and installation requirements of Division-16 sections. Do not proceed with equipment start-up until wiring installation is acceptable to equipment installer.

3.7 EQUIPMENT CONNECTIONS

A. General: Connect compressed air systems to mechanical equipment as indicated, and comply with equipment manufacturer's instructions where not otherwise indicated.

3.8 FIELD QUALITY CONTROL

A. Test compressed air alarms for proper operation at high pressure, low pressure.

END OF SECTION

SECTION 22 66 59 – FIRE HALL EMERGENCY SHUTOFF

PART 1 - GENERAL

1.01 RELATED DOCUMENTS

A. Drawings and general provisions of Contract, including General and Supplementary Conditions, Division 1 Specifications.

1.02 SECTION INCLUDES

A. Furnishings and installation of the Fire Pit Safety Device System as shown on the Drawings, as herein specified.

1.03 CODES AND REGULATIONS:

A. NFPA 70, National Electrical Code

B. NFPA 72, National Fire Alarm Code

C. NFPA 90A, Installation of Air Conditioning and Ventilation Systems).

D. Americans with Disabilities Act

E. Local and State Building Codes

F. NFPA 54 Natural Gas Code.

G. International Fuel Gas Code

H. All requirements of the local Authority Having Jurisdiction.

I. Life Safety 101 2015

1.04 WARRANTY

A. Provide a 2-year minimum warranty from date of acceptance of project.

1.05 MANUFACTURER

A. Lab Automation Control Systems (LACS) by E&I or approved equal.

1.06 SUBMITTALS

A. Submittal procedures: See Section 220050.

B. Product Data:
Manufacturer
Model Number
Indicate all options and accessories
Engineered specific cut sheets

C. Submit complete submittal package within 30 calendar days after award of this work for approval. Equipment is not to be ordered without approval and signed submittals. Submittals to include cut sheets indicating the exact size of all panels, solenoid valves, piping sizes for each panel.

PART 2 - PRODUCTS

2.01 It is the intent of this specification to provide a complete and operational system, to include all necessary products and devices, power and controls wiring installed in accordance with Division 26, and all necessary interlocks

A.1 **FIRE HALL EMERGENCY SHUTOFF CONTROL PANEL:**

A. **LACS by E&I Model (FHCP)**
At each outdoor area as shown on Drawings, provide a LACS Fire Hall Emergency Shutoff Control Panel (FHCP). Panel shall be UL Certified and NEMA 4 flush mount, brushed stainless steel door and trim with a concealed wall box. Wiring to the input power terminals shall be per the drawings. Panel shall consist of discrete Inputs, Relay Outputs, Terminal Blocks with Ground TB are required. System shall also include a Gas Rack Valve Solenoid Assembly (RVA) located per detail and location as indicated on drawings. Valve shall be aluminum body and UL rated for gas service. Solenoid coil shall be 120VAC and located as indicated on drawings. Solenoid and ball valve shall be UL listed and approved for service intended, valve assembly shall include terminal block for easy connection to the controller and a 80 mesh strainer. Solenoid shall close upon loss of operating power. Connection of 120VAC Power Supply shall be by Division 26 Contractor.

B. Panel shall also be provided with push/pull maintained panic operator button assembly to deactivate output circuits in case of an emergency and a keyed switch for panel reset. Reset after panic shall occur by re-keying. Wiring connections shall be provided by Division 26 contractor.

3.01 INSTALLATION:

A. Install in accordance with manufacturer's recommendations and instructions. Verify manufacturer's mounting heights to comply with ADA or other standards.

B. Furnish and install all devices as shown on Drawings and as specified herein.

3.02 CONDUIT:

A. Provide conduits for control and integration wiring from point of connection to each device to accessible point. Conduits for arrays and panic assemblies shall be separate from line voltage, control wiring and integrated systems wiring.

3.03 WIRING

A. Operating Power: Shall be provided by Division 26.

B. System Arrays:
Provide wiring from Fire Hall Emergency Shut-off Control Panel to each array. Make connections at monitoring device and terminate at output terminal on control panel if present.

3.04 SYSTEM TEST AND START-UP

A. Prior to placing the Fire Hall Emergency Shut-off Control Panel into service, an authorized Start-up must be performed by an authorized LACS start-up agent or factory personnel to activate the 2-year factory warranty.

B. Verify that all components and control devices comply with manufacturer's requirements and recommendations, and that all devices and installations conform to Drawings and Specification requirements.

1. Verify that all controlled piping systems have been thoroughly cleaned.
2. Verify that all controlled devices and circuits are ON.
3. Verify that connections to all integrated systems are complete.
4. Verify that all monitoring systems respond to Panic.
5. Verify that remote panic assemblies activate the Panic State.

C. Upon completion of ALL Start-up tests, place the system into service. Complete all warranty registration documents. Submit originals with other project related closeout and O & M documentation. Review all operating procedures and maintenance schedules with a representative of the Owner. Provide all System keys (2 Sets) to the Owner's representative.

END OF SECTION

SECTION 23 02 00 - BASIC MATERIALS AND METHODS

PART 1 - GENERAL

1.1 GENERAL REQUIREMENTS

A. The requirements of the General Conditions and Supplementary Conditions apply to all Work herein.

B. The Contract Drawings indicate the extent and general arrangement of the systems. If any departure from the Contract Drawings is deemed necessary by the Contractor, details of such departures and the reasons therefore, shall be submitted to the Architect/Engineer for review as soon as practicable. No such departures shall be made without the prior written approval of the Architect/Engineer.

C. Notwithstanding any reference in the Specifications to any article, device, product, material, fixture, form or type of construction by name, make or catalog number, such reference shall not be construed as limiting competition; and the Contractor, in such cases, may at his option use any article, device, product, material, fixture, form or type of construction which in the judgment of the Architect/Engineer, expressed in writing, is the equivalent of that specified.

1.2 SCOPE OF WORK

A. The Work included under this Contract consists of the furnishing and installation of all equipment and material necessary and required to form complete and functioning systems in all of their various phases, all as shown on the accompanying Drawings and/or described in these Specifications. The Contractor shall review all pertinent drawings, including those of other contracts, prior to commencement of Work.

B. This Division requires the furnishing and installing of all items as specified herein, indicated on the Drawings or reasonably inferred as necessary for safe and proper operation; including every article, device or accessory (whether or not specifically called for by item) reasonably necessary to facilitate each system's functioning as indicated by the design and the equipment specified. Elements of the work include, but are not limited to, materials, labor, supervision, transportation, storage, equipment, utilities, all required permits, licenses and inspections. All work performed under this Section shall be in accordance with the Project Manual, Drawings and Specifications and is subject to the terms and conditions of the Contract.

C. The approximate locations of Mechanical (HVAC) items are indicated on the Drawings. These Drawings are not intended to give complete and accurate details in regard to location of outlets, apparatus, etc. Exact locations are to be determined by actual measurements at the building, and will in all cases be subject to the review of the Owner or Engineer, who reserves the right to make any reasonable changes in the locations indicated without additional cost to the Owner.

D. Items specifically mentioned in the Specifications but not shown on the Drawings and/or items shown on Drawings but not specifically mentioned in the Specifications shall be installed by the Contractor under the appropriate section of work as if they were both specified and shown.

E. All discrepancies between the Contract Documents and actual job-site conditions shall be reported to the Owner or Engineer so that they will be resolved prior to bidding. Where this cannot be done at least 7 working days prior to bid; the greater or more costly of the

discrepancy shall be bid. All labor and materials required to perform the work described shall be included as part of this Contract.

F. It is the intention of this Section of the Specifications to outline minimum requirements to furnish the Owner with a turn-key and fully operating system in cooperation with other trades.

G. It is the intent of the above "Scope" to give the Contractor a general outline of the extent of the Work involved; however, it is not intended to include each and every item required for the Work. Anything omitted from the "Scope" but shown on the Drawings, or specified later, or necessary for a complete and functioning heating, ventilating and air conditioning system shall be considered a part of the overall "Scope".

H. The Contractor shall rough-in fixtures and equipment furnished by others from rough-in and placement drawings furnished by others. The Contractor shall make final connection to fixtures and equipment furnished by others.

I. The Contractor shall participate in the commissioning process as required; including, but not limited to, meeting attendance, completion of checklists, and participation in functional testing.

1.3 SCHEMATIC NATURE OF CONTRACT DOCUMENTS

A. The Contract Documents are schematic in nature in that they are only to establish scope and a minimum level of quality. They are not to be used as actual working construction drawings. The actual working construction drawings shall be the reviewed shop drawings.

B. All duct or pipe or equipment locations as indicated on the documents do not indicate every transition, offset, or exact location. All transitions, offsets, clearances and exact locations shall be established by actual field measurements, coordination with the structural, architectural and reflected ceiling plans, and other trades. Submit shop drawings for review.

C. All transitions, offsets and relocations as required by actual field conditions shall be performed by the Contractor at no additional cost to the Owner.

D. Additional coordination with electrical contractor may be required to allow adequate clearances of electrical equipment, fixtures and associated appurtenances. Contractor to notify Architect and Engineer of unresolved clearances, conflicts or equipment locations.

1.4 SITE VISIT AND FAMILIARIZATION

A. Before submitting a bid, it will be necessary for each Contractor whose work is involved to visit the site and ascertain for himself the conditions to be met therein in installing his work and make due provision for same in his bid. It will be assumed that this Contractor in submitting his bid has visited the premises and that his bid covers all work necessary to properly install the equipment shown. Failure on the part of the Contractor to comply with this requirement shall not be considered justification for the omission or faulty installation of any work covered by these Specifications and Drawings.

B. Understand the existing utilities from which services will be supplied; verify locations of utility services, and determine requirements for connections.

C. Determine in advance that equipment and materials proposed for installation fit into the confines indicated.

1.5 WORK SPECIFIED IN OTHER SECTIONS

A. Finish painting is specified. Prime and protective painting are included in the work of this Division.

B. Owner and General Contractor furnished equipment shall be properly connected to Mechanical (HVAC) systems.

C. Furnishing and installing all required Mechanical (HVAC) equipment control relays and electrical interlock devices, conduit, wire and J-boxes are included in the Work of this Division.

1.6 PERMITS, TESTS, INSPECTIONS

A. Arrange and pay for all permits, fees, tests, and all inspections as required by governmental authorities.

1.7 DATE OF SUBSTANTIAL COMPLETION

A. The date of final acceptance shall be the date of substantial completion. Refer to Division One for additional requirements.

B. The date of final acceptance shall be documented in writing and signed by the Architect, Owner and Contractor.

1.8 DELIVERY, STORAGE, AND HANDLING

A. Deliver products to the project properly identified with names, model numbers, types, grades, compliance labels, and other information needed for identification.

B. Deliver products to the project at such time as the project is ready to receive the equipment, pipe or duct - properly protected from incidental damage and weather damage.

C. Damaged equipment, duct or pipe shall be promptly removed from the site and new, undamaged equipment, pipe or duct shall be installed in its place promptly with no additional charge to the Owner.

1.9 NOISE AND VIBRATION

A. The heating, ventilating and air conditioning systems, and the component parts thereof, shall be guaranteed to operate without objectionable noise and vibration.

B. Provide foundations, supports and isolators as specified or indicated, properly adjusted to prevent transmission of vibration to the building structure, piping and other items.

C. Carefully fabricate ductwork and fittings with smooth interior finish to prevent turbulence and generation or regeneration of noise.

D. All equipment shall be selected to operate with minimum of noise and vibration. If, in the opinion of the Architect, objectionable noise or vibration is produced or transmitted to or through the building structure by equipment, piping, ducts or other parts of the Work, the Contractor shall rectify such conditions without extra cost to the Owner.

1.10 APPLICABLE CODES AND STANDARDS

A. Obtain all required permits and inspections for all work required by the Contract Documents and pay all required fees in connection thereof.

B. Arrange with the serving utility companies for the connection of all required utilities and pay all charges, meter charges, connection fees and inspection fees, if required.

C. Comply with all applicable codes, specifications, local ordinances, industry standards, utility company regulations and the applicable requirements which includes and is not limited to the following nationally accepted codes and standards:

1. Air Moving & Conditioning Association, AMCA.
2. American Standards Association, ASA.
3. American Society of Heating, Refrigerating, and Air-Conditioning Engineers, Inc., ASHRAE.
4. American Society of Mechanical Engineers, ASME.
5. American Society of Plumbing Engineers, ASPE.
6. American Society of Testing Materials, ASTM.
7. American Water Works Association, AWWA.
8. National Bureau of Standards, NBS.
9. National Fire Protection Association, NFPA.
10. Sheet Metal & Air Conditioning Contractors' National Association, SMACNA.
11. Underwriters' Laboratories, Inc., UL.
12. International Building Code, IBC.
13. International Energy Conservation Code, IECC.
14. International Fire Code, IFC.
15. International Fuel Gas Code, IFGC.
16. International Mechanical Code, IMC.

D. Where differences existing between the Contract Documents and applicable state or city building codes, state and local ordinances, industry standards, utility company regulations and the applicable requirements of the nationally accepted codes and standards, the more stringent or costly application shall govern. Promptly notify the Engineer in writing of all differences.

E. When directed in writing by the Engineer, remove all work installed that does not comply with the Contract Documents and applicable state or city building codes, state and local ordinances, industry standards, utility company regulations and the applicable requirements of the above listed nationally accepted codes and standards, correct the deficiencies, and complete the work at no additional cost to the Owner.

1.11 DEFINITIONS AND SYMBOLS

A. General Explanation: A substantial amount of construction and Specification language constitutes definitions for terms found in other Contract Documents, including Drawings which must be recognized as diagrammatic and schematic in nature and not completely descriptive of requirements indicated thereon. Certain terms used in Contract Documents are defined generally in this article, unless defined otherwise in Division 01.

B. Definitions and explanations of this Section are not necessarily either complete or exclusive, but are general for work to the extent not stated more explicitly in another provision of the Contract Documents.

C. Indicated: The term "Indicated" is a cross-reference to details, notes or schedules on the

Drawings, to other paragraphs or schedules in the Specifications and to similar means of recording requirements in Contract Documents. Where such terms as "Shown", "Noted", "Scheduled", "Specified" and "Detailed" are used in lieu of "Indicated", it is for the purpose of helping the reader locate cross-reference material, and no limitation of location is intended except as specifically shown.

D. Directed: Where not otherwise explained, terms such as "Directed", "Requested", "Accepted", and "Permitted" mean by the Architect or Engineer. However, no such implied meaning will be interpreted to extend the Architect's or Engineer's responsibility into the Contractor's area of construction supervision.

E. Reviewed: Where used in conjunction with the Engineer's response to submittals, requests for information, applications, inquiries, reports and claims by the Contractor the meaning of the term "Reviewed" will be held to limitations of Architect's and Engineer's responsibilities and duties as specified in the General and Supplemental Conditions. In no case will "Reviewed" by Engineer be interpreted as a release of the Contractor from responsibility to fulfill the terms and requirements of the Contract Documents.

F. Furnish: Except as otherwise defined in greater detail, the term "Furnish" is used to mean supply and deliver to the project site, ready for unloading, unpacking, assembly, installation, etc., as applicable in each instance.

G. Install: Except as otherwise defined in greater detail, the term "Install" is used to describe operations at the project site including unloading, unpacking, assembly, erection, placing, anchoring, applying, working to dimension, finishing, curing, protection, cleaning and similar operations, as applicable in each instance.

H. Provide: Except as otherwise defined in greater detail, the term "Provide" is used to mean "Furnish and Install", complete and ready for intended use, as applicable in each instance.

I. Installer: Entity (person or firm) engaged by the Contractor, or its Subcontractor or Sub-subcontractor for performance of a particular unit of work at the project site, including unloading, unpacking, assembly, erection, placing, anchoring, applying, working to dimension, finishing, curing, protection, cleaning and similar operations, as applicable in each instance. It is a general requirement that such entities (Installers) be expert in the operations they are engaged to perform.

J. Imperative Language: Used generally in Specifications. Except as otherwise indicated, requirements expressed imperatively are to be performed by the Contractor. For clarity of reading at certain locations, contrasting subjective language is used to describe responsibilities that must be fulfilled indirectly by the Contractor or, when so noted, by other identified installers or entities.

K. Minimum Quality/Quantity: In every instance, the quality level or quantity shown or specified is intended as minimum quality level or quantity of work to be performed or provided. Except as otherwise specifically indicated, the actual work may either comply exactly with that minimum (within specified tolerances), or may exceed that minimum within reasonable tolerance limits. In complying with requirements, indicated or scheduled numeric values are either minimums or maximums as noted or as appropriate for the context of the requirements. Refer instances of uncertainty to Owner or Engineer via a request for information (RFI) for decision before proceeding.

L. Abbreviations and Symbols: The language of Specifications and other Contract Documents including Drawings is of an abbreviated type in certain instances, and implies

words and meanings which will be appropriately interpreted. Actual word abbreviations of a self-explanatory nature have been included in text of Specifications and Drawings. Specific abbreviations and symbols have been established, principally for lengthy technical terminology and primarily in conjunction with coordination of Specification requirements with notations on Drawings and in Schedules. These are frequently defined in Section at first instance of use or on a Legend and Symbol Drawing. Trade and industry association names and titles of generally recognized industry standards are frequently abbreviated. Singular words will be interpreted as plural and plural words will be interpreted as singular where applicable and where full context of Contract Documents so indicate. Except as otherwise indicated, graphic symbols and abbreviations used on Drawings and in Specifications are those recognized in construction industry for indicated purposes. Where not otherwise noted symbols and abbreviations are defined by the latest ASHRAE Fundamentals Handbook, chapter 34 "Abbreviations and Symbols", ASME and ASPE published standards.

1.12 DRAWINGS AND SPECIFICATIONS

A. These Specifications are intended to supplement the Drawings and it will not be the province of the Specifications to mention any part of the Work which the Drawings are competent to fully explain in every particular and such omission is not to relieve the Contractor from carrying out portions indicated on the Drawings only.

B. Should items be required by these Specifications and not indicated on the Drawings, they are to be supplied even if of such nature that they could have been indicated thereon. In case of disagreement between Drawings and Specifications, or within either Drawings or Specifications, the better quality or greater quantity of work shall be estimated and the matter referred to the Architect or Engineer for review with a request for information and clarification at least 7 working days prior to bid opening date for issuance of an addendum.

C. The listing of product manufacturers, materials and methods in the various sections of the Specifications, and indicated on the Drawings, is intended to establish a standard of quality only. It is not the intention of the Owner or Engineer to discriminate against any product, material or method that is the equivalent of the standards as indicated and/or specified, nor is it intended to preclude open, competitive bidding. The fact that a specific manufacturer is listed as an acceptable manufacturer should not be interpreted to mean that the manufacturer’s standard product will meet the requirements of the project design, Drawings, Specifications and space constraints.

D. The Architect or Engineer and Owner shall be the sole judge of quality and equivalence of equipment, materials and methods.

E. Products by other reliable manufacturers, other materials, and other methods, will be accepted as outlined, provided they have equivalent capacity, construction, and performance. However, under no circumstances shall any substitution be made without the written permission of the Architect or Engineer and Owner. Request for prior approval must be made in writing 10 calendar days prior to the bid date without fail.

F. Wherever a definite product, material or method is specified and there is not a statement that another product, material or method will be acceptable, it is the intention of the Owner or Engineer that the specified product, material or method is the only one that shall be used without prior approval.

G. Wherever a definite material or manufacturer's product is specified and the Specification states that products of similar design and equivalent construction from the specified list of manufacturers may be substituted, it is the intention of the Owner or Engineer that

products of manufacturers that are specified are the only products that will be acceptable and that products of other manufacturers will not be considered for substitution without approval.

H. Wherever a definite product, material or method is specified and there is a statement that "OR EQUIVALENT" product, material or method will be acceptable, it is the intention of the Owner or Engineer that the specified product, material or method or an "OR EQUIVALENT" product, material or method may be used if it complies with the Specifications and is submitted for review to the Engineer as outline herein.

I. Where permission to use substituted or alternative equipment on the project is granted by the Owner or Engineer in writing, it shall be the responsibility of the Contractor or Subcontractor involved to verify that the equipment will fit in the space available which includes allowances for all required Code and maintenance clearances, and to coordinate all equipment structural support, plumbing and electrical requirements and provisions with the Mechanical (HVAC) Design Documents and all other trades, including Division 26.

J. Changes in architectural, structural, electrical, mechanical, and plumbing requirements for the substitution shall be the responsibility of the bidder wishing to make the substitution. This shall include the cost of redesign by the affected designer(s). Any additional cost incurred by affected Subcontractors shall be the responsibility of this bidder and not the Owner.

K. If any request for a substitution of product, material or method is rejected, the Contractor will automatically be required to furnish the product, material or method named in the Specifications. Repetitive requests for substitutions will not be considered.

L. The Owner or Engineer will investigate all requests for substitutions when submitted in accordance with the requirements listed above; and if accepted, will issue a letter allowing the substitutions.

M. Where equipment other than that used in the design as specified or shown on the Drawings is substituted (either from an approved manufacturers list or by submittal review), it shall be the responsibility of the substituting Contractor to coordinate space requirements, building provisions and connection requirements with his trades and all other trades; and to pay all additional costs to other trades, the Owner, the Architect or Engineer, if any, due to the substitutions.

1.13 SUBMITTALS

A. Coordinate with Division 01 for submittal timetable requirements, unless noted otherwise within thirty (30) days after the Contract is awarded. The Contractor shall submit an electronic copy of a complete set of shop drawings and complete data covering each item of equipment or material. The submittal of each item requiring a submittal must be received by the Architect or Engineer within the above thirty-day period. The Architect or Engineer shall not be responsible for any delays or costs incurred due to excessive shop drawing review time for submittals received after the thirty (30) day time limit. The Architect and Engineer will retain a copy of all shop drawings for their files. All literature pertaining to items subject to Shop Drawing submittal shall be submitted at one time. Submittals shall be placed in one electronic file in PDF 8.0 format and bookmarked for individual specification sections. Individual electronic files of submittals for individual specifications shall not be permitted. Each submittal shall include the following items:

1. A cover sheet with the names and addresses of the Project, Architect, MEP

Engineer, General Contractor and the Subcontractor making the submittal. The cover sheet shall also contain the section number covering the item or items submitted and the item nomenclature or description.

2. An index page with a listing of all data included in the Submittal.
3. A list of variations page with a listing of all variations, including unfurnished or additional required accessories, items or other features, between the submitted equipment and the specified equipment. If there are no variations, then this page shall state "NO VARIATIONS". Where variations affect the work of other Contractors, then the Contractor shall certify on this page that these variations have been fully coordinated with the affected Contractors and that all expenses associated with the variations will be paid by the submitting Contractor. This page will be signed by the submitting Contractor.
4. Equipment information including manufacturer's name and designation, size, performance and capacity data as applicable. All applicable Listings, Labels, Approvals and Standards shall be clearly indicated.
5. Dimensional data and scaled drawings as applicable to show that the submitted equipment will fit the space available with all required Code and maintenance clearances clearly indicated and labeled at a minimum scale of 1/4" = 1'-0", as required to demonstrate that the alternate or substituted product will fit in the space available.
6. Identification of each item of material or equipment matching that indicated on the Drawings.
7. Sufficient pictorial, descriptive and diagrammatic data on each item to show its conformance with the Drawings and Specifications. Any options or special requirements or accessories shall be so indicated. All applicable information shall be clearly indicated with arrows or another approved method.
8. Additional information as required in other Sections of this Division.
9. Certification by the General Contractor and Subcontractor that the material submitted is in accordance with the Drawings and Specifications, signed and dated in long hand. Submittals that do not comply with the above requirements shall be returned to the Contractor and shall be marked "REVISE AND RESUBMIT".

B. Refer to Division 00 and Division 01 for additional information on shop drawings and submittals.

C. Equipment and materials submittals and shop drawings will be reviewed for compliance with design concept only. It will be assumed that the submitting Contractor has verified that all items submitted can be installed in the space allotted. Review of shop drawings and submittals shall not be considered as a verification or guarantee of measurements or building conditions.

D. Where shop drawings and submittals are marked "REVIEWED", the review of the submittal does not indicate that submittals have been checked in detail nor does it in any way relieve the Contractor from his responsibility to furnish material and perform work as required by the Contract Documents.

E. Shop drawings shall be reviewed and returned to the Contractor with one of the following categories indicated:

1. REVIEWED: Contractor need take no further submittal action, shall include this submittal in the O&M manual and may order the equipment submitted on.
2. REVIEWED AS NOTED: Contractor shall submit a letter verifying that required exceptions to the submittal have been received and complied with including additional accessories or coordination action as noted, and shall include this submittal and compliance letter in the O&M manual. The contractor may order

the equipment submitted on at the time of the returned submittal providing the Contractor complies with the exceptions noted.

3. NOT APPROVED: Contractor shall resubmit new submittal on material, equipment or method of installation when the alternate or substitute is not approved. The Contractor will automatically be required to furnish the product, material or method named in the Specifications and/or Drawings. Contractor shall not order equipment that is not approved. Repetitive requests for substitutions will not be considered.
4. REVISE AND RESUBMIT: Contractor shall resubmit new submittal on material, equipment or method of installation when the alternate or substitute is marked revise and resubmit. The Contractor will automatically be required to furnish the product, material or method named in the Specifications and/or provide as noted on previous shop drawings. Contractor shall not order equipment marked revise and resubmit. Repetitive requests for substitutions will not be considered.
5. CONTRACTOR'S CERTIFICATION REQUIRED: Contractor shall resubmit submittal on material, equipment or method of installation. The Contractor's stamp is required stating that the submittal meets all conditions of the Contract Documents. The stamp shall be signed by the General Contractor. The submittal will not be reviewed if the stamp is not placed and signed on all shop drawings.
6. MANUFACTURER NOT AS SPECIFIED: Contractor shall resubmit new submittal on material, equipment or method of installation when the alternate or substitute is marked manufacturer not as specified. The Contractor will automatically be required to furnish the product, material or method named in the Specifications. Contractor shall not order equipment when submittal is marked manufacturer not as specified. Repetitive requests for substitutions will not be considered.

F. Materials and equipment which are purchased or installed without submittal review shall be at the risk of the Contractor and the cost for removal and replacement of such materials and equipment and related work which is judged unsatisfactory by the Owner or Engineer for any reason shall be at the expense of the Contractor. The responsible Contractor shall remove the material and equipment noted above and replace with specified equipment or material at his own expense when directed in writing by the Architect or Engineer.

G. Shop Drawing Submittals shall be complete and checked prior to submission to the Engineer for review.

H. Submittals are required for, but not limited to, the following items subject to project requirements:

1. Coordination Drawings
2. Common Motor Requirements for HVAC Equipment
3. Expansion Fittings and Loops for HVAC Piping
4. Variable Frequency Motor Speed Control for HVAC Equipment
5. Hangers and Support for Piping and Equipment HVAC
6. Vibration and Seismic Controls for HVAC Piping and Equipment
7. Testing, Adjusting, and Balancing
8. Duct Insulation
9. HVAC Equipment Insulation
10. HVAC Piping Insulation
11. Refrigerant Monitor System
12. Energy Management and Control System
13. Above Ground Hydronic Piping
14. Hydronic Specialties

15. Hydronic Pumps
16. Refrigerant Piping
17. Metal Ductwork
18. Ductwork Accessories
19. HVAC Fans
20. Series Fan Powered Terminal Units
21. Single Duct VAV Terminal Box
22. Parallel Fan Powered Terminal Unit
23. Dual Duct Air Terminal Units
24. Air Distribution Devices
25. Air Filters
26. Flue Pipe Systems
27. Non-Condensing Boiler-Gas Fired (Forced Draft)
28. Condensing Boiler – Gas Fired
29. Finned Water-Tube Boilers
30. Steel Water-Tube Boilers
31. Gas Fired Furnaces
32. Gas Fired Roof Mounted Make-up Air Unit Heaters
33. Shell and Tube Heat Exchanger
34. Centrifugal Liquid Chiller
35. Rotary Screw Water Chillers
36. Air Cooled Rotary Liquid Chiller
37. Induced Draft Cooling Tower
38. Energy Recovery Ventilator
39. Modular Indoor Central Station Air Handling Units
40. Packaged Air Handling Unit
41. Modular Outdoor Central Station Air Handling Units
42. 100% Outside Air Rooftop Unit with Gas Heat
43. Self-Contained Air Conditioners
44. Rooftop Heating and Cooling Units Electric Cooling-Gas Heating
45. Rooftop Heating and Cooling Units Electric Cooling-Electric Heat
46. Variable Air Volume Rooftop Units
47. Variable Refrigerant Flow (VRF) for HVAC System
48. Water Source Heat Pump Unit
49. Fan Coil Unit
50. Unit Ventilators
51. Electric Duct Heaters
52. Radiant Heating Electric Cables
53. Air Conditioning Unit for Swimming Pool Enclosures

I. Refer to other Division 23 sections for additional submittal requirements. Provide samples of actual materials and/or equipment to be used on the Project upon request of the Owner or Engineer.

1.14 COORDINATION DRAWINGS

A. Prepare coordination drawings to a scale of 1/4"=1'-0" or larger; detailing major elements, components, and systems of mechanical equipment and materials in relationship with other systems, installations, and building components. Indicate locations where space is limited for installation and access, and where sequencing and coordination of installations are of importance to the efficient flow of the Work, including (but not necessarily limited to) the following:

1. Indicate the proposed locations of pipe, duct, equipment, and other materials. Include the following:

a. Wall and type locations.
b. Clearances for installing and maintaining insulation.
c. Locations of light fixtures and sprinkler heads.
d. Clearances for servicing and maintaining equipment, including tube removal, filter removal, and space for equipment disassembly required for periodic maintenance.
e. Equipment connections and support details.
f. Exterior wall and foundation penetrations.
g. Routing of storm and sanitary sewer piping.
h. Fire-rated wall and floor penetrations.
i. Sizes and location of required concrete pads and bases.
j. Valve stem movement.
k. Structural floor, wall and roof opening sizes and details.

2. Indicate scheduling, sequencing, movement, and positioning of large equipment into the building during construction.
3. Prepare floor plans, elevations, and details to indicate penetrations in floors, walls, and ceilings and their relationship to other penetrations and installations.
4. Prepare reflected ceiling plans to coordinate and integrate installations, air distribution devices, light fixtures, communication systems components, and other ceiling-mounted items.

B. This Contractor shall be responsible for coordination of all items that will affect the installation of the work of this Division. This coordination shall include, but not be limited to: voltage, ampacity, capacity, electrical and piping connections, space requirements, sequence of construction, building requirements and special conditions.

C. By submitting coordination drawings on the project, this Contractor is indicating that all necessary coordination has been completed and that the systems, products and equipment submitted can be installed in the building and will operate as specified and intended, in full coordination with all other Contractors and Subcontractors.

1.15 RECORD DOCUMENTS

A. Prepare Record Documents in accordance with the requirements in Special Project Requirements, in addition to the requirements specified in Division 23, indicate the following installed conditions:

1. Duct mains and branches, size and location, for both exterior and interior; locations of dampers, fire dampers, duct access panels, and other control devices; filters, fuel fired heaters, fan coils, condensing units, and roof-top A/C units requiring periodic maintenance or repair.
2. Mains and branches of piping systems, with valves and control devices located and numbered, concealed unions located, and with items requiring maintenance located (i.e., traps, strainers, expansion compensators, tanks, etc.). Valve location diagrams, complete with valve tag chart. Indicate actual inverts and horizontal locations of underground piping.
3. Equipment locations (exposed and concealed), dimensioned from prominent building lines.
4. Approved substitutions, Contract Modifications, and actual equipment and materials installed.
5. Contract Modifications, actual equipment and materials installed.

B. Engage the services of a Land Surveyor or Professional Engineer registered in the state in which the project is located as specified herein to record the locations and invert elevations of underground installations.

C. The Contractor shall maintain a set of clearly marked black line record "AS-BUILT" prints on the job site on which he shall mark all work details, alterations to meet site conditions and changes made by "Change Order" notices. These shall be kept available for inspection by the Owner, Architect or Engineer at all times.

D. Refer to Division 00 and Division 01 for additional requirements concerning Record Drawings. If the Contractor does not keep an accurate set of as-built drawings, the pay request may be altered or delayed at the request of the Architect. Mark the drawings with a colored pencil. Delivery of as-built prints and re-producibles is a condition of substantial completion.

E. The record prints shall be updated on a daily basis and shall indicate accurate dimensions for all buried or concealed work, precise locations of all concealed pipe or duct, locations of all concealed valves, controls and devices and any deviations from the work shown on the Construction Documents which are required for coordination. All dimensions shall include at least two dimensions to permanent structure points.

F. Submit three prints of the tracings for review. Make corrections to tracings as directed and deliver "Auto Positive Tracings" to the Architect. "As-Built" drawings shall be furnished in addition to submittals.

G. When the option described in paragraph F above is not exercised, then upon completion of the Work, the Contractor shall transfer all marks from the tracings and submit a set of clear concise reproducible record "AS-BUILT" drawings and shall submit the reproducible drawings with corrections made by a competent draftsman and three (3) sets of black line prints to the Architect or Engineer for review prior to scheduling the final inspection at the completion of the Work. The reproducible record "AS-BUILT" drawings shall have the Engineer's Name and Seal removed or blanked out and shall be clearly marked and signed on each sheet as follows:

CERTIFIED RECORD DRAWINGS

DATE:

(NAME OF GENERAL CONTRACTOR)

BY:_____
(SIGNATURE)

(NAME OF SUBCONTRACTOR)

BY:_____
(SIGNATURE)

1.16 OPERATING AND MAINTENANCE MANUALS

A. Prepare operating and maintenance manuals in accordance with Division 00 and Division 01 and, in addition to the requirements specified in those Divisions, include the following information for equipment items:

1. Description of function, normal operating characteristics and limitations, performance curves, engineering data and tests, and complete nomenclature and commercial numbers of replacement parts.
2. Manufacturer's printed operating procedures to include start-up, break-in, and routine and normal operating instructions; regulation, control, stopping, shutdown, and emergency instructions; and summer and winter operating

instructions.

3. Maintenance procedures for routine preventative maintenance and troubleshooting; disassembly, repair, and reassembly; aligning and adjusting instructions.
4. Servicing instructions and lubrication charts and schedules.

1.17 CERTIFICATIONS AND TEST REPORTS

A. Submit a detailed schedule for completion and testing of each system indicating scheduled dates for completion of system installation and outlining tests to be performed and scheduled date for each test. This detailed completion and test schedule shall be submitted at least 90 days before the projected substantial completion date.

B. Test result reporting forms shall be submitted for review no later than the date of the detailed schedule.

C. Submit 4 copies of all certifications and test reports to the Architect or Engineer for review adequately in advance of substantial completion of the Work to allow for remedial action as required to correct deficiencies discovered in equipment and systems.

D. Certifications and test reports to be submitted shall include, but not be limited to, those items outlined in Section 23 02 00.

1.18 OPERATING AND MAINTENANCE MANUALS

A. Coordinate with Division 00 and Division 01 for operating and maintenance manual requirements. Unless noted otherwise, bind together in “D ring type” binders (National model no. 79-883 or equal). Binders shall be large enough to allow ¼” of spare capacity. Three (3) sets of all reviewed submittals, fabrication drawings, bulletins, maintenance instructions, operating instructions and parts exploded views and lists for each and every piece of equipment furnished under these Specifications. All sections shall be typed and indexed into sections and labeled for easy reference and shall utilize the individual specification section numbers shown in the Mechanical Specifications as an organization guideline. Bulletins containing information about equipment that is not installed on the project shall be properly marked up or stripped and reassembled. All pertinent information required by the Owner for proper operation and maintenance of equipment supplied by Division 23 shall be clearly and legibly set forth in memoranda that shall, likewise, be bound with bulletins.

B. Prepare maintenance manuals in accordance with Special Project Conditions. In addition to the requirements specified in Division 23, include the following information for equipment items:

1. Identifying names, name tag designations and locations for all equipment.
2. Valve tag lists with valve number, type, color coding, location and function.
3. Reviewed submittals with exceptions noted compliance letter.
4. Fabrication drawings.
5. Equipment and device bulletins and data sheets clearly highlighted to show equipment installed on the project and including performance curves and data as applicable (i.e., description of function, normal operating characteristics and limitations, performance curves, engineering data and tests, and complete nomenclature and model numbers of replacement parts).
6. Manufacturer's printed operating procedures to include start-up, break-in, and routine and normal operating instructions; regulation, control, stopping, shutdown, and emergency instructions; and summer and winter operating

instructions.

7. Maintenance procedures for routine preventative maintenance and troubleshooting; disassembly, repair, and reassembly; aligning and adjusting instructions, servicing instructions and lubrication charts and schedules.
8. Equipment and motor name plate data.
9. Wiring diagrams.
10. Exploded parts views and parts lists for all equipment and devices.
11. Color coding charts for all painted equipment and piping.
12. Location and listing of all spare parts and special keys and tools furnished to the Owner.
13. Furnish recommended lubrication schedule for all required lubrication points with listing of type and approximate amount of lubricant required.

C. Refer to Division 00 and Division 01 for additional information on Operating and Maintenance Manuals.

D. Operating and Maintenance Manuals shall be turned over to the Owner or Engineer for review a minimum of 14 working days prior to the beginning of the operator training period.

1.19 OPERATOR TRAINING

A. The Contractor shall furnish the services of factory trained specialists to instruct the Owner's operating personnel. The Owner's operator training shall include a minimum of 12 hours of onsite training in three 4 hour shifts.

B. Before proceeding with the instruction of Owner Personnel, prepare a typed outline in triplicate, listing the subjects that will be covered in this instruction, and submit the outline for review by the Owner. At the conclusion of the instruction period, obtain the signature of each person being instructed on each copy of the reviewed outline to signify that he has a proper understanding of the operation and maintenance of the systems and resubmit the signed outlines.

C. Refer to other Division 23 Sections for additional Operator Training requirements.

1.20 FINAL COMPLETION

A. At the completion of the Work, all equipment and systems shall be tested and faulty equipment and material shall be repaired or replaced. Refer to Sections of Division 23 for additional requirements.

B. Clean and adjust all air distribution devices and replace all air filters immediately prior to Substantial Completion.

C. Touch up and/or refinish all scratched equipment and devices immediately prior to Substantial Completion.

1.21 CONTRACTOR'S GUARANTEE

A. Use of the HVAC systems to provide temporary service during construction period will not be allowed without permission from the Owner in writing; and, if granted, shall not cause the warranty period to start, except as defined below.

B. Contractor shall guarantee to keep the entire installation in repair and perfect working order for a period of one year after the date of the Substantial Completion, and shall

furnish (free of additional cost to the Owner) all materials and labor necessary to comply with the above guarantee throughout the year beginning from the date of Substantial Completion, Beneficial Occupancy by the Owner, or the Certificate of Final Payment as agreed upon by all parties.

C. This guarantee shall not include cleaning or changing filters except as required by testing, adjusting and balancing.

D. All air conditioning compressors shall have parts and labor guarantees for a period of not less than 5 years beyond the date of Substantial Completion.

E. Refer to Sections in Division 23 for additional guarantee or warranty requirements.

1.22 TRANSFER OF ELECTRONIC FILES

A. Project documents are not intended or represented to be suitable for reuse by Architect/Owner or others on extensions of this project or on any other project. Any such reuse or modification without written verification or adaptation by Engineer, as appropriate for the specific purpose intended, will be at Architect/Owner's risk and without liability or legal exposure to Engineer or its consultants from all claims, damages, losses and expense, including attorney's fees arising out of or resulting thereof.

B. Because data stored in electronic media format can deteriorate or be modified inadvertently, or otherwise, without authorization of the data's creator, the party receiving the electronic files agrees that it will perform acceptance tests or procedures within sixty (60) days of receipt, after which time the receiving party shall be deemed to have accepted the data thus transferred to be acceptable. Any errors detected within the sixty (60) day acceptance period will be corrected by the party delivering the electronic files. Engineer is not responsible for maintaining documents stored in electronic media format after acceptance by the Architect/Owner.

C. When transferring documents in electronic media format, Engineer makes no representations as to the long term compatibility, usability or readability of documents resulting from the use of software application packages, operating systems, or computer hardware differing from those used by Engineer at the beginning of the Project.

D. Any reuse or modifications will be at the Contractor's sole risk and without liability or legal exposure to Architect, Engineer or any consultant.

E. The Texas Board of Architectural Examiners (TBAE) has stated that it is in violation of Texas law for persons other than the Architect of record to revise the Architectural drawings without the Architect's written consent.

1. It is agreed that "MEP" hard copy or computer-generated documents will not be issued to any other party except directly to the Architect/Owner. The Contract Documents are contractually copyrighted and cannot be used for any other project or purpose except as specifically indicated in AIA B-141 Standard Form of Agreement Between Architect and Owner.
2. If the client, Architect or Owner of the project requires electronic media for "record purposes", then AutoCAD/ Revit documents will be prepared by Engineer on electronic media such as removable memory devices, flash drives or CD's. These documents can also be submitted via file transfer protocols. AutoCAD/ Revit files will be submitted with all title block references intact to permit the end user to only view and plot the drawings. Revisions will not be permitted in this configuration.

3. At the Architect/Owner's request, Engineer will assist the Contractor in the preparation of the submittals and prepare one copy of AutoCAD/ Revit files on electronic media or submit through file transfer protocols. The electronic media will be prepared with all indicia of documents ownership removed. The electronic media will be prepared in a ".rvt" or ".dwg" format to permit the end user to revise the drawings.

PART 2 - PRODUCTS

2.1 MATERIALS

A. Provide materials and equipment manufactured by a domestic United States manufacturer and assembled in the United States for all local and Federal Government projects. These materials and equipment shall comply with "Buy American Act."

B. Access Doors: Provide access doors as required for access to equipment, valves, controls, cleanouts and other apparatus where concealed. Access doors shall have concealed hinges and screw driver cam locks.

C. All access doors located in wet areas such as restrooms, locker rooms, shower rooms, kitchen and any other wet areas shall be constructed of stainless steel.

D. Access Doors: shall be as follows:

1. Plaster Surfaces: Milcor Style K.
2. Ceramic Tile Surface: Milcor Style M.
3. Drywall Surfaces: Milcor Style DW.
4. Install doors only in locations approved by the Architect.

2.2 EQUIPMENT PADS (See 2.4 in Section 26 02 00)

PART 3 - EXECUTION

3.1 ROUGH-IN

A. Verify final locations for rough-ins with field measurements and with the requirements of the actual equipment to be connected via reviewed submittals.

B. Refer to equipment specifications in Divisions 2 through 48 for additional rough-in requirements.

3.2 MECHANICAL INSTALLATIONS

A. General: Sequence, coordinate, and integrate the various elements of mechanical systems, materials, and equipment. Comply with the following requirements:

1. Coordinate mechanical systems, equipment, and materials installation with other building components.
2. Verify all dimensions by field measurements.
3. Arrange for chases, slots, and openings in other building components during progress of construction, to allow for mechanical installations.
4. Coordinate the installation of required supporting devices and sleeves to be set in poured-in-place concrete and other structural components, as they are constructed.
5. Sequence, coordinate, and integrate installations of mechanical materials and

equipment for efficient flow of the Work. Give particular attention to large equipment requiring positioning prior to closing in the building.

6. Where mounting heights are not detailed or dimensioned, install systems, materials, and equipment to provide the maximum headroom possible.
7. Coordinate connection of mechanical systems with exterior underground and overhead utilities and services. Comply with requirements of governing regulations, franchised service companies, and controlling agencies. Provide required connection for each service.
8. Install systems, materials, and equipment to conform with architectural action markings on submittal, including coordination drawings, to greatest extent possible. Conform to arrangements indicated by the Contract Documents, recognizing that portions of the Work are shown only in diagrammatic form. Where coordination requirements conflict with individual system requirements, resolve conflicts and submit proposed solution to the Architect for review.
9. Install systems, materials, and equipment level and plumb, parallel and perpendicular to other building systems and components, where installed exposed in finished spaces.
10. Install mechanical equipment to facilitate servicing, maintenance, and repair or replacement of equipment components. As much as possible, connect equipment for ease of disconnecting, with minimum of interference with other installations. Extend grease fittings to an accessible location and label.
11. Install access doors where units are concealed behind finished surfaces. Refer to paragraph 2.1 in this section and architect for access doors specifications and location.
12. Install systems, materials, and equipment giving right-of-way priority to systems required to be installed at a specified slope.
13. Provide roof curbs for all roof mounted equipment. Coordinate with roof construction for pitched roof. Provide roof curbs which match the roof slope and provides a level top for equipment installation. Refer to Architectural drawings and details.
14. The equipment to be furnished under these Specifications shall be essentially the standard product of the manufacturer. Where two or more units of the same class of equipment are required, these units shall be products of a single manufacturer; however, the component parts of the system need not be the product of the same manufacturer.
15. The Architectural and Structural features of the building and the space limitations shall be considered in selection of all equipment. No equipment shall be furnished which will not suit the arrangement and space limitations indicated.
16. Lubrication: Prior to start-up, check and properly lubricate all bearings as recommended by the manufacturer.
17. Where the word "Concealed" is used in these Specifications in connection with insulating, painting, piping, ducts, etc., it shall be understood to mean hidden from sight as in chases, furred spaces or suspended ceilings. "Exposed" shall be understood to mean the opposite of concealed.
18. Identification of Mechanical Equipment:

    a. Mechanical equipment shall be identified by means of nameplates permanently attached to the equipment. Nameplates shall be engraved laminated plastic or etched metal. Submittals shall include dimensions and lettering format for approval. Attachment shall be with escutcheon pins, self-tapping screws, or machine screws.
    b. Tags shall be attached to all valves, including control valves, with nonferrous chain. Tags shall be brass and at least 1-1/2 inches in diameter. Nameplate and tag symbols shall correspond to the identification symbols on the temperature control submittal and the "as-built" drawings.

19. Provide construction filters for all air handling units, fan coil unit, VAV boxes, and all other air handling equipment during the entire construction period.
20. Provide temporary construction strains for all strainers in the hydronic systems during the initial flushing of the systems.

3.3 CUTTING AND PATCHING

A. Protection of Installed Work: During cutting and patching operations, protect adjacent installations.

B. Perform cutting, fitting, and patching of mechanical equipment and materials required to:

1. Uncover Work to provide for installation of ill-timed Work.
2. Remove and replace defective Work.
3. Remove and replace Work not conforming to requirements of the Contract Documents.
4. Remove samples of installed Work as specified for testing.
5. Install equipment and materials in existing structures.
6. Upon written instructions from the Engineer, uncover and restore Work to provide for Engineer/Owner's observation of concealed Work, without additional cost to the Owner.
7. Patch existing finished surfaces and building components using new materials matching existing materials and experienced Installers. Patch finished surfaces and building components using new materials specified for the original installation and experienced Installers; refer to the materials and methods required for the surface and building components being patched; Refer to Paragraph 1.11 I for definition of "Installer."

C. Cut, remove and legally dispose of selected mechanical equipment, components, and materials as indicated, including but not limited to removal of mechanical piping, mechanical ducts and HVAC units, and other mechanical items made obsolete by the new Work.

D. Protect the structure, furnishings, finishes, and adjacent materials not indicated or scheduled to be removed.

E. Provide and maintain temporary partitions or dust barriers adequate to prevent the spread of dust and dirt to adjacent areas.

3.4 WORK SEQUENCE, TIMING, COORDINATION WITH OWNER, ARCHITECT AND ENGINEER

A. The Owner will cooperate with the Contractor, however, the following provisions must be observed:

1. A meeting will be held at the project site, prior to any construction, between the Owner's Representative, the General Contractor, the Sub-Contractors and the Engineer to discuss Contractor's employee parking space, access, storage of equipment or materials, and use of the Owner's facilities or utilities. The Owner's decisions regarding such matters shall be final.
2. During the construction of this project, normal facility activities will continue in existing buildings until renovated areas are completed. Plumbing, fire protection, lighting, electrical, communications, heating, air conditioning, and ventilation systems shall be maintained in service within the occupied spaces of the existing building.
3. Contractor shall not start-up any of the HVAC equipment unless the Owner,

Architect and Engineer are signed off.

4. Start-up for major HVAC equipment such as chillers, cooling towers, variable frequency drives and hot water boilers shall be performed by a factory technician. The start-up shall include a written report signed off by Contractor, Engineer and Owner.

3.5 DEMOLITION AND WORK WITHIN EXISTING BUILDINGS

A. In the preparation of these documents every effort has been made to show the approximate locations of, and connections to, the existing piping, duct, equipment and other apparatus related to this phase of the Work. However, this Contractor shall be responsible for verifying all of the above information. This Contractor shall visit the existing site to inspect the facilities and related areas. This Contractor shall inspect and verify all details and requirements of all the Contract Documents, prior to the submission of a proposal. All discrepancies between the Contract Documents and actual job-site conditions shall be resolved by the contractor, who shall produce drawings that shall be submitted to the Architect/Engineer for review. All labor and materials required to perform the work described shall be a part of this Contract.

B. All equipment and/or systems noted on the Drawings "To Remain" shall be inspected and tested on site to certify its working condition. A written report on the condition of all equipment to remain, including a copy of the test results and recommended remedial actions and costs shall be made by this Contractor to the Architect/Engineer for review.

C. All equipment and/or systems noted on the Drawings "To Be Removed" shall be removed including, associated pipe and duct, pipe and duct hangers and/or line supports. Where duct or pipe is to be capped for future or end of line use, it shall be properly tagged with its function or service appropriately identified. Where existing equipment is to be removed or relocated and has an electric motor or connection, the Electrical Contractor shall disconnect motor or connection, remove wiring to a safe point and this Contractor shall remove or relocate motor or connection along with the equipment.

D. During construction and remodeling, portions of the Project shall remain in service. Construction equipment, material, tools, extension cords, etc., shall be arranged so as to present minimum hazard or interruption to the occupants of the building. None of the construction work shall interfere with the proper operation of the existing facility; or be so conducted as to cause harm or danger to persons on the premises. All fire exits, stairs or corridors required for proper access, circulation or exit shall remain clear of equipment, materials or debris. The General Contractor shall maintain barricades, other separations in corridors and other spaces where work is conducted.

E. Certain work during the demolition and construction phases may require overtime or night time shifts or temporary evacuation of the occupants. Coordinate and schedule all proposed down time with the Owner at least seventy-two (72) hours in advance in writing.

F. Any salvageable equipment as determined by the Owner, shall be delivered to the Owner, and placed in storage at the location of his choice. All other debris shall be removed from the site immediately.

G. Equipment, piping or other potential hazards to the occupants of the building shall not be left overnight outside of the designated working or construction area.

H. Make every effort to minimize damage to the existing building and the Owner's property. Repair, patch or replace as required any damage that occurs as a result of work at the site. Care shall be taken to minimize interference with the Owner's activities during

construction and to keep construction disrupted areas to a minimum. Coordinate with the Owner and other trades in scheduling and performance of the work.

I. Include in the contract price all rerouting of existing pipe, duct, etc., and the reconnecting of the existing equipment as necessitated by field conditions to allow the installation of the new systems regardless of whether or not such rerouting, reconnecting or relocating is shown on the Drawings. Furnish all temporary pipe, duct, controls, etc., as required to maintain heating, cooling, and ventilation services for the existing areas with a minimum of interruption.

J. All existing pipe, duct, materials, equipment, controls and appurtenances not included in the remodel or alteration areas are to remain in place.

K. Pipe, duct, equipment and controls serving mechanical and other Owner's equipment, etc., which is to remain but is served by pipe, duct, equipment and controls that are disturbed by the remodeling work, shall be reconnected in such a manner as to leave this equipment in proper operating condition.

L. No portion of the **fire protection systems** shall be turned off, modified or changed in any way without the express knowledge and written permission of the Owner’s representative in order to protect systems that shall remain in service.

M. It is the intention of this Section of the Specifications to outline minimum requirements to furnish the Owner with a turn-key and operating system in cooperation with other trades with a minimum of disruption or downtime.

N. Refer to Architectural Demolition and/or Alteration plans for actual location of walls, ceilings, etc., being removed and/or remodeled.

END OF SECTION

SECTION 23 05 13 - COMMON MOTOR REQUIREMENTS FOR HVAC EQUIPMENT

PART 1 - GENERAL

1.1 GENERAL REQUIREMENTS

A. The requirements of the General Conditions and Supplementary Conditions apply to all work herein.

B. The Basic Materials and Methods, Section 23 02 00, are included as a part of this Section as though written in full in this document.

1.2 SCOPE

A. Scope of the Work shall include the furnishing and complete installation of the equipment covered by this Section, with all auxiliaries, ready for owner's use.

B. WORK SPECIFIED ELSEWHERE:

1. Painting
2. Automatic temperature controls.
3. Power control wiring to motors and equipment.

1.3 WARRANTY

Warrant the Work specified herein for one year and motors for five years beginning on the date of substantial completion.

1.4 SUBMITTALS

A. SHOP DRAWINGS: Indicate size material, and finish. Show locations and installation procedures. Include details of joints, attachments, and clearances.

B. PRODUCT DATA: Submit schedules, charts, literature, and illustrations to indicate the performance, fabrication procedures variations, and accessories.

C. MOTOR NAMEPLATE INFORMATION: Manufacturer's name, address, utility and operating data.

D. Refer to Division One for additional information.

1.5 DELIVERY AND STORAGE

A. DELIVERY: Deliver clearly labeled, undamaged materials in the manufacturers' unopened containers.

B. TIME AND COORDINATION: Deliver materials to allow for minimum storage time at the project site. Coordinate delivery with the scheduled time of installation.

C. STORAGE: Store materials in a clean, dry location, protected from weather and abuse.

PART 2 - PRODUCTS

2.1 ELECTRIC MOTORS

A. APPROVED MANUFACTURERS: Provide motors by a single manufacturer as much as

possible.

1. Baldor
2. Marathon
3. Siemens-Allis
4. General Electric
5. U.S. Motor

B. TEMPERATURE RATING: Provide insulation as follows:

1. CLASS B: 40 degrees C maximum.
2. CLASS F:
   a. Between 40 degrees C and 65 degrees C maximum.
   b. Totally enclosed motors.

C. STARTING CAPABILITY: As required for service indicated five starts minimum per hour.

D. PHASES AND CURRENT: Verify electrical service compatibility with motors to be used.

1. UP TO 1/2 HP: Provide permanent split, capacitor-start single phase motors with inherent overload protection.
2. 3/4 HP AND LARGER: Provide squirrel-cage induction polyphase motors.
3. Provide two separate windings on 2-speed polyphase motors.
4. Name plate voltage shall be the same as the circuit's normal voltage, serving the motor.

E. SERVICE FACTOR: 1.15 for polyphase; 1.35 for single phase.

F. FRAMES: U-frames 1.5 hp. and larger.

G. BEARINGS: Provide sealed re-greaseable ball bearings; with top mounted zerc lubrication fittings and bottom side drains minimum average life 100,000 hours typically, and others as follows:

1. Design for thrust where applicable.
2. PERMANENTLY SEALED: Where not accessible for greasing.
3. SLEEVE-TYPE WITH OIL CUPS: Light duty fractional hp. motors or polyphase requiring minimum noise level.

H. ENCLOSURE TYPE: Provide enclosures as follows:

1. CONCEALED INDOOR: ODP (Open Drip Proof).
2. EXPOSED INDOOR: Guard Protected.
3. OUTDOOR TYPICAL: Type II. TEFC.
4. OUTDOOR WEATHER PROTECTED: Type I. WPI.
5. EXPLOSION PROOF, XP: For use in hazardous locations.

I. OVERLOAD PROTECTION: Built-in sensing device for stopping motor in all phase legs and signaling where indicated for fractional horse power motors.

J. NOISE RATING: "Quiet" except where otherwise indicated.

K. EFFICIENCY: Minimum full load efficiency listed in the following table, when tested in accordance with IEEE Test Procedure 112A, Method B, including stray load loss measure.

Motor Horsepower	NEMA Efficiency INDEX Letter	Minimum Efficiency %
	1800 RPM Synchronous Speed	
3-5	G	89.5
7.5	G	91.0
10	F	91.7
15-20	E	93.0
25-30	E	93.6
40	D	94.1
50	C	94.5
60	C	95.0
75	C	95.0
100-125	B	95.4
150-200	B	95.8
	1200 RPM Synchronous Speed	
3-5	G	89.5
7.5	G	90.2
10	F	91.7
15	F	91.7
20	E	92.4
25-30	E	93.6
40-50	D	94.1
60	D	94.5
75	C	94.5
100-125	C	95.0
150-200	B	95.4

2.2 MOTOR CONTROLLERS (STARTERS)

A. All motor controllers (for equipment furnished under Division 23) shall be furnished under Division 23 and installed under Division 26 unless otherwise noted on the plans.

1. Starters shall be provided for 3 phase motors 3/4 horsepower and greater.

B. Motor starters shall be furnished as follows.

1. GENERAL: Motor starters shall be Square D Company Class 8536 across-the-line magnetic type, full-voltage, non-reversing (FAVOR) starter. All starters shall be constructed and tested in accordance with the latest NEMA standards, sizes and horsepower. ICE sizes are not acceptable. Starters shall be mounted in a general purpose dead front, painted steel enclosure and surface-mounted. Provide size and number of poles as shown and required by equipment served. Provide two speed, two winding or two speed, single winding motor starter as required for two speed motors.
2. CONTACTS: Magnetic starter contacts shall be double break solid silver alloy. All contacts shall be replaceable without removing power wiring or removing starter from panel. The starter shall have straight-through wiring.
3. OPERATING COILS: Operating coils shall be 120 volts and shall be of molded construction. When the coil fails, the starter shall open and shall not lock in the closed position.
4. OVERLOAD RELAYS: Provide manual reset, trip-free Class 20 overload relays in each phase conductor in of all starters. Overload relays shall be melting alloy type with visual trip indication. All 3 phase and single phase starters shall have one overload relay in each underground conductor. Relay shall not be field

adjustable from manual to automatic reset. Provide 6 overload relays for two speed motor starters.

5. PILOT LIGHTS: Provide a red running pilot light for all motor starters. Pilot lights shall be mounted in the starter enclosure cover. Pilot lights shall be operated from an interlock on the motor starter and shall not be wired across the operating coil.
6. CONTROLS: Provide starters with HAND-OFF-AUTOMATIC switches. Coordinate additional motor starter controls with the requirements of Division 23. Motor starter controls shall be mounted in the starter enclosure cover.
7. CONTROL POWER TRANSFORMER: Provide a single-phase 480 volt control power transformer with each starter for 120 volt control power. Connect the primary side to the line side of the motor starter. The primary side shall be protected by a fuse for each conductor. The secondary side shall have one leg fused and one leg grounded. Arrange transformer terminals so that wiring to terminals will not be located above the transformer.
8. AUXILIARY CONTACTS: Each starter shall have one normally open and one normally closed convertible auxiliary contact in addition to the number of contacts required for the "holding interlock", remote monitoring, and control wiring. In addition, it shall be possible to field-install three more additional auxiliary contacts without removing existing wiring or removing the starter from its enclosure.
9. UNIT WIRING: Unit shall be completely pre-wired to terminals to eliminate any interior field wiring except for line and load power wiring and HVAC control wiring.
10. ENCLOSURES: All motor starter enclosures shall be NEMA 1, general purpose enclosures or NEMA-3R if mounted exposed to high moisture conditions. Provide NEMA 4X when located by cooling towers.
11. POWER MONITOR: Provide a square "D" 8430 MPS phase failure and under-voltage relay, base and wiring required for starters serving all 3 phase motors. Set the under-voltage setting according to minimum voltage required for the motor to operate within its range.

C. APPROVED MANUFACTURERS: Controller numbers are based on first named manufacturer. Provide one of the following manufacturer's.

1. Siemens.
2. Square D.
3. General Electric.
4. Eaton.

2.3 COMBINATION MOTOR STARTERS

A. GENERAL: Combination motor starters shall consist of a magnetic starter and a fusible or non-fusible disconnect switch in a dead front, painted steel NEMA 1 enclosure unless otherwise noted and shall be surface-mounted. Size and number of poles shall as shown and required by equipment served. Combination motor starters shall be as specified for motor starters in Paragraph 2.1/B, except as modified herein.

B. DISCONNECT SWITCH: Disconnect switches shall be as specified in Section 26 28 16.

C. APPROVED MANUFACTURERS: Controller numbers are based on first named manufacturer. Provide one of the following manufacturer's.

1. Siemens.
2. Square D.
3. General Electric.

PART 3 - EXECUTION

3.1 All equipment shall be installed in accordance with the manufacturers' recommendations and printed installation instructions.

3.2 All items required for a complete and proper installation are not necessarily indicated on the plans or in the specifications. Contractors' price shall include all items required as per manufacturers' requirements.

3.3 INSTALLATION

A. GENERAL: Install in a professional manner. Any part or parts not meeting this requirement shall be replaced or rebuilt without extra expense to Owner.

B. Install rotating equipment in static and dynamic balance.

C. Provide foundations, supports, and isolators properly adjusted to allow minimum vibration transmission within the building.

D. Correct objectionable noise or vibration transmission in order to operate equipment satisfactorily as determined by the Engineer.

END OF SECTION

SECTION 23 05 16 - EXPANSION FITTINGS AND LOOPS FOR HVAC PIPING

PART 1 - GENERAL

1.1 GENERAL REQUIREMENTS

A. The requirements of the General Conditions and Supplementary Conditions apply to all work herein.

B. Section 23 02 00 – Basic Materials and Methods is included as a part of this Section as though written in full in this document.

1.2 WORK INCLUDED

A. Flexible pipe connections.

B. Expansion joints and compensators

C. Pipe loops, offsets, and swing joints.

1.3 RELATED WORK

A. Section 23 05 29 - Hangers and Supports for Piping and Equipment - HVAC

B. Section 23 21 13 - Above Ground Hydronic Piping

C. Section 23 22 13 - Steam and Condensate Heating Piping.

D. Section 23 23 00 - Refrigerant Piping.

1.4 PERFORMANCE REQUIREMENTS

A. Provide structural work and equipment required to control expansion and contraction of piping. Verify that anchors, guides, and expansion joints provided, adequately protect system.

B. Expansion Calculations:

1. Installation Temperature: 50 degrees F (10 degrees C).
2. Hot Water Heating: 210 degrees F (99 degrees C).
3. Domestic Hot Water: 140 degrees F (60 degrees C).
4. Safety Factor: 30 percent.

C. Pipe sizes indicated are to establish a minimum quality of compensator. Refer to manufacturer's literature for model series for different pipe sizes.

1.5 SUBMITTALS

A. Submit shop drawings under provisions of Division One.

B. Product Data:

1. Flexible Pipe Connectors: Indicate maximum temperature and pressure rating, face-to-face length, live length, hose wall thickness, hose convolutions per foot (meter) and per assembly, fundamental frequency of assembly, braid structure, and total number of wires in braid.

2. Expansion Joints: Indicate maximum temperature and pressure rating, and maximum expansion compensation.

C. Design Data: Indicate selection calculations.

D. Manufacturer's Installation Instructions: Indicate special procedures, and external controls.

1.6 PROJECT RECORD DOCUMENTS

A. Submit under provisions of Division One.

B. Record actual locations of flexible pipe connectors, expansion joints, anchors, and guides.

1.7 OPERATION AND MAINTENANCE DATA

A. Submit under provisions of Division One.

B. Maintenance Data: Include adjustment instructions.

1.8 QUALIFICATIONS

A. Manufacturer: Company specializing in manufacturing the products specified in this section with minimum five years documented experience.

B. Design expansion compensation system under direct supervision of a Professional Engineer experienced in design of this work and licensed in the state where the project is located.

1.9 DELIVERY, STORAGE, AND HANDLING

A. Deliver, store, protect and handle products under provisions of Division One.

B. Accept expansion joints on site in factory packing with shipping bars and positioning devices intact. Inspect for damage.

C. Protect equipment from exposure by leaving factory coverings, pipe end protection, and packaging in place until installation.

1.10 WARRANTY

A. Provide five year warranty under provisions of Division One.

B. Warranty: Include coverage for leak free performance of packed expansion joints.

1.11 EXTRA MATERIALS

A. Furnish under provisions of Division One.

PART 2 - PRODUCTS

2.1 FLEXIBLE PIPE CONNECTORS

A. Steel Piping (Based on 2" Pipe):
1. Manufacturers:

a. Amber/Booth Metal-Flex, Model Type SS-PM or FW
b. Triplex, Model Flexonics Series 400M
c. Mercer Rubber Company, Model BSS-EM (Mason Industries)

2. Inner Hose: Type 321, stainless steel, corrugated metal.
3. Exterior Sleeve: Type 321, single braided stainless steel.
4. Pressure Rating: 350 psig WOG and 70 degrees F. For 4 inch pipe - 200 psig WOG and 70 degrees F.
5. Joint: Schedule 40 steel, threaded with male nipple and hex boss each end and union. Flanged joints for pipe sizes 2½ inch and larger.
6. Size: Use pipe sized units.
7. Maximum offset: 1/2 inch on each side of installed center line.
8. Application: Air handling unit cooling and heating coils.

B. Copper Piping (Based on 2" Pipe):

1. Manufacturers:
a. Amber/Booth Metal-Flex, Model Type BR-SM
b. Triplex, Model Flexonics Series 300
c. Mercer Rubber Company, Type BFF (Mason Industries)
2. Inner Hose: Corrugated Bronze
3. Exterior Sleeve: Braided bronze.
4. Pressure Rating: 250 psig WOG and 70 degrees F.
5. Joint: Threaded with male nipple and hex boss each end with union. Flanged joints for pipe sizes 2½ inch and larger.
6. Size: Use pipe sized units.
7. Maximum offset: 1/2 inch on each side of installed center line.
8. Application: Air handling unit cooling and heating coils.

2.2 EXPANSION JOINTS

A. Bellows Type (Based on 4" Pipe):

1. Manufacturers:
a. Amber/Booth, Style EB
b. Triplex, Model Resistoflex R6905
c. Mercer Rubber Company, Style 803 or 805 (Mason Industries)
2. Body: Monel wire reinforced molded TFE teflon bellows, multiple arch.
3. Pressure Rating: 70 psig WSP and 250 degrees F (66 degrees C).
4. Maximum Compression: 1 inch.
5. Maximum Extension: 1 inch.
6. Maximum Offset: 1/2 inch.
7. Joint: ASA standard ductile iron flanges, integral molded gasket.
8. Size: Use pipe sized units.
9. Accessories: Control rod limit bolts.
10. Application: Steel piping 8 inch and under.

2.3 ACCESSORIES

A. Pipe Alignment Guides to Direct Axial Movement:

1. Manufacturers:
a. Triplex, Model Flexonics
b. Metraflex, Style II
2. Two piece welded steel with shop paint, and bolted to fit standard pipe, frame with four mounting holes, clearance for minimum 1 inch thick insulation, minimum 3 inch travel.

PART 3 - EXECUTION

3.1 INSTALLATION

A. Install in accordance with manufacturer's instructions.

B. Construct spool pieces to exact size of flexible connection for future insertion.

C. Install flexible pipe connectors on pipes connected to equipment supported by vibration isolation. Provided line size flexible connectors.

D. Install flexible connectors at right angles to displacement. Install one end immediately adjacent to isolated equipment and anchor other end. Install in horizontal plane unless indicated otherwise.

E. Provide miscellaneous metals to rigidly anchor pipe to building structure. Provide pipe guides so that movement takes place along axis of pipe only. Erect piping such that strain and weight is not on cast connections or apparatus.

F. Provide support and equipment required to control expansion and contraction of piping. Provide loops, pipe offsets, and swing joints, or expansion joints where required.

3.2 MANUFACTURER'S FIELD SERVICES

A. Prepare and start systems under provisions of Division One.

B. Provide inspection services by flexible pipe manufacturer's representative for final installing and certify installation is in accordance with manufacturer's recommendations and connectors are performing satisfactorily.

END OF SECTION

SECTION 23 05 29 – HANGERS AND SUPPORTS FOR PIPING AND EQUIPMENT - HVAC

PART 1 - GENERAL

1.1 GENERAL REQUIREMENTS

A. The requirements of the General Conditions and Supplementary Conditions apply to all work herein.

B. Section 23 02 00 - Basic Materials and Methods is included as a part of this Section as though written in full in this document.

1.2 WORK INCLUDED

A. Pipe, and equipment hangers, supports and associated anchors.

B. Sleeves and seals.

C. Flashing and sealing equipment and pipe stacks.

1.3 RELATED WORK

A. Section 21 00 00 – Fire Suppression.

B. Section 22 10 00 – Plumbing Piping and Pumps.

C. Section 23 05 48 – Vibration and Seismic Controls for HVAC Piping and Equipment.

D. Section 23 07 16 – HVAC Equipment Insulation.

E. Section 23 07 19 – HVAC Piping Insulation.

F. Section 23 21 13 – Above Ground Hydronic Piping.

1.4 REFERENCES

A. ANSI/ASME B31.1 - Power Piping.

B. NFPA 13 - Standard for the Installation of Sprinkler Systems.

C. NFPA 14 - Standard for the Installation of Standpipe and Hose Systems.

1.5 QUALITY ASSURANCE

A. Supports for Sprinkler Piping: In conformance with NFPA 13.

B. Supports for Standpipes: In conformance with NFPA 14.

1.6 SUBMITTALS

A. Submit shop drawings and product data under provisions of Division One.

B. Indicate hanger and support framing and attachment methods.

PART 2 - PRODUCTS

2.1 PIPE HANGERS AND SUPPORTS

A. Hangers for Pipes Sizes 1/2 to 1-1/2 Inch: Malleable iron, adjustable swivel, split ring.

B. Hangers for Pipes Sizes 2 to 4 Inch: Carbon steel, adjustable clevis.

C. Hangers for Pipes Sizes 6 Inches and Over: Adjustable steel yoke, cast iron roller, double hanger.

D. Multiple or Trapeze Hangers: Steel channels with welded spacers, pre-formed manufactured saddles and hanger rods; cast iron roller and stand for pipe sizes 6 inches and over.

E. Wall Support for Pipe Sizes to 3 Inches: Cast iron hook.

F. Wall Support for Pipe Sizes 4 Inches and over: adjustable steel yoke and cast iron roller.

G. Vertical Support: Steel riser clamp.

H. Floor Support for Pipe Sizes to 4 Inches: Cast iron adjustable pipe saddle, locknut nipple, floor flange, and concrete pier or steel support.

I. Floor Support for Pipe Sizes 6 Inches and Over: Adjustable cast iron roller and stand, steel screws, and concrete pier or steel support.

J. Roof Pipe Supports and Hangers: Galvanized Steel Channel System as manufactured by Portable Pipe Hangers, Inc. or approved equal.

1. For pipes 2-1/2” and smaller – Type PP10 with roller
2. For pipes 3” through 8” – Type PS
3. For multiple pipes – Type PSE - Custom

K. Copper Pipe Support and Hangers: Electro-galvanized with thermoplastic elastomer cushions; Unistrut “Cush-A-Clamp” or equal. Hangers: Plastic coated; Unistrut or equal.

L. Shields for Vertical Copper Pipe Risers: Sheet lead.

M. Pipe Rough-In Supports in Walls/Chases: Provide preformed plastic pipe supports, Sioux Chief “Pipe Titan” or equal.

2.2 HANGER RODS

A. Galvanized Hanger Rods: Threaded both ends, threaded one end, or continuous threaded.

2.3 INSERTS

A. Inserts: Malleable iron case with galvanized steel shell and expander plug for threaded connection with lateral adjustment, top slot for reinforcing rods, lugs for attaching to forms; size inserts to suit threaded hanger rods.

2.4 FLASHING

A. Metal Flashing: 20 gage galvanized steel.

B. Lead Flashing: 4 lb. /sq. ft. sheet lead for waterproofing; 1 lb. /sq. ft. sheet lead for

soundproofing.

C. Caps: Steel, 20 gage minimum; 16 gage at fire resistant elements.

D. Coordinate with roofing contractor/Architect for type of flashing on metal roofs.

2.5 EQUIPMENT CURBS

A. Fabricate curbs of hot dipped galvanized steel.

B. For metal roof construction, roof curbs shall be made of aluminum or stainless steel. Coordinate with Architectural Drawings and details.

2.6 SLEEVES

A. Sleeves for Pipes through Non-fire Rated Floors: Form with 18 gage galvanized steel, tack welded to form a uniform sleeve.

B. Sleeves for Pipes through Non-fire Rated Beams, Walls, Footings, and Potentially Wet Floors: Form with steel pipe, Schedule 40.

C. Sleeves for Pipes through Fire Rated and Fire Resistive Floors and Walls, and Fireproofing: Prefabricated fire rated steel sleeves including seals, UL listed.

D. Sleeves for Round Ductwork: Form with galvanized steel.

E. Sleeves for Rectangular Ductwork: Form with galvanized steel.

F. Fire Stopping Insulation: Glass fiber type, non-combustible, U.L. listed.

G. Caulk: Paintable 25-year acrylic sealant.

H. Pipe Alignment Guides: Factory fabricated, of cast semi-steel or heavy fabricated steel, consisting of bolted, two-section outer cylinder and base with two-section guiding spider that bolts tightly to pipe. Length of guides shall be as recommended by manufacturer to allow indicated travel.

2.7 FABRICATION

A. Size sleeves large enough to allow for movement due to expansion and contraction. Provide for continuous insulation wrapping.

B. Design hangers without disengagement of supported pipe.

C. Design roof supports without roof penetrations, flashing or damage to the roofing material.

2.8 FINISH

A. Prime coat exposed steel hangers and supports. Hangers and supports located in crawl spaces, pipe shafts, and suspended ceiling spaces are not considered exposed.

PART 3 - EXECUTION

3.1 INSERTS

A. Provide inserts for suspending hangers from reinforced concrete slabs and sides of reinforced concrete beams. Coordinate with Structural Engineer for placement of inserts.

B. Provide hooked rod to concrete reinforcement section for inserts carrying pipe over 4 inches.

C. Where concrete slabs form finished ceiling, provide inserts to be flush with slab surface.

D. Where inserts are omitted, drill through concrete slab from below and provide thru-bolt with recessed square steel plate and nut recessed into and grouted flush with slab. Verify with Structural Engineer prior to start of work.

3.2 PIPE HANGERS AND SUPPORTS

A. Support horizontal piping as follows:

PIPE SIZE	MAX. HANGER SPACING	HANGER DIAMETER
(Steel Pipe)		
1/2 to 1-1/4 inch	7’-0”	3/8"
1-1/2 to 3 inch	10'-0"	3/8"
4 to 6 inch	10'-0"	1/2"
8 to 10 inch	10'-0"	5/8"
12 to 14 inch	10'-0"	3/4"
15 inch and over	10'-0"	7/8"
(Copper Pipe)		
1/2 to 1-1/4 inch	5'-0"	3/8"
1-1/2 to 2-1/2 inch	8'-0"	3/8"
3 to 4 inch	10'-0"	3/8"
6 to 8 inch	10'-0"	1/2"
(Cast Iron)		
2 to 3 inch	5'-0"	3/8"
4 to 6 inch	10'-0"	1/2"
8 to 10 inch 10'-0"	5/8"	
12 to 14 inch	10'-0"	3/4"
15 inch and over	10'-0"	7/8"
(PVC Pipe)		
1-1/2 to 4 inch	4'-0"	3/8"
6 to 8 inch	4'-0"	1/2"

10 and over	4'-0"	5/8"

B. Install hangers to provide minimum 1/2 inch space between finished covering and adjacent work.

C. Place a hanger within 12 inches of each horizontal elbow, and at the vertical to horizontal transition.

D. Use hangers with 1-1/2 inch minimum vertical adjustment.

E. Support horizontal cast iron pipe adjacent to each hub, with 5 feet maximum spacing between hangers.

F. Support vertical piping at every floor. Support vertical cast iron pipe at each floor at hub.

G. Where several pipes can be installed in parallel and at same elevation, provide multiple or trapeze hangers.

H. Support riser piping independently of connected horizontal piping.

I. Install hangers with nut at base and above hanger; tighten upper nut to hanger after final installation adjustments.

J. Portable pipe hanger systems shall be installed per manufacturer's instructions.

K. Distances between supports are maximum distance. Supports shall be provided to carry the pipe/equipment load.

3.3 INSULATED PIPING: Comply with the following installation requirements.

A. Clamps: Attach galvanized clamps, including spacers (if any), to piping with clamps projecting through insulation; do not exceed pipe stresses allowed by ASME B31.9.

B. Saddles: Install galvanized protection saddles MSS Type 39 where insulation without vapor barrier is indicated. Fill interior voids with segments of insulation that match adjoining pipe insulation. Secure the full contact area of the saddle to the pipe insulation with 1/8" thick coat of mastic.

C. Shields: Install protective shields MSS Type 40 on cold and chilled water piping that has vapor barrier. Secure the full contact area of the shield to the pipe insulation with 1/8" thick coat of mastic.

D. Shields shall span an arc of 180 degrees and shall have dimensions in inches not less than the following:

NPS	LENGTH	THICKNESS
1/4 THROUGH 3-1/2	12	0.048
4	12	0.060
5 & 6	18	0.060
8 THROUGH 14	24	0.075

16 THROUGH 24	24	0.105

E. Piping 2” and larger: provide galvanized sheet metal shields with calcium silicate insulation at hangers/supports.

F. Insert material shall be at least as long as the protective shield.

G. Thermal Hanger Shields: Install where indicated, with insulation of same thickness as piping.

3.4 EQUIPMENT BASES AND SUPPORTS

A. Provide equipment bases of concrete.

B. Provide templates, anchor bolts, and accessories for mounting and anchoring equipment.

C. Construct support of steel members. Brace and fasten with flanges bolted to structure.

D. Provide rigid anchors for pipes after vibration isolation components are installed.

3.5 FLASHING

A. Provide flexible flashing and metal counter flashing where piping and ductwork penetrate weather or waterproofed walls, floors, and roofs.

B. Flash vent and soil pipes projecting 8 inches minimum above finished roof surface with lead worked one inch minimum into hub, 8 inches minimum clear on sides with 24 x 24 inches sheet size. For pipes through outside walls, turn flanges back into wall and caulk. Provide metal counter flash and seal.

C. Flash floor drains in floors with topping over finished areas with lead, 10 inches clear on sides with minimum 36 x 36 inch sheet size. Fasten flashing to drain clamp device.

D. Seal floor, shower, mop sink, and all other drains watertight to adjacent materials.

E. Provide curbs for mechanical roof installations 8 inches minimum high above roofing surface. Contact Architect for all flashing details and roof construction. Seal penetrations watertight.

3.6 SLEEVES

A. Set sleeves in position in formwork. Provide reinforcing around sleeves.

B. Extend sleeves through floors minimum one inch above finished floor level. Caulk sleeves full depth with fire rated thermafiber and 3M caulking and provide floor plate.

C. Where piping or ductwork penetrates floor, ceiling, or wall, close off space between pipe or duct and adjacent work with U.L. listed fire stopping insulation and caulk seal air tight. Provide close fitting metal collar or escutcheon covers at both sides of penetration.

D. Fire protection sleeves may be flush with floor of stairways.

END OF SECTION

SECTION 23 05 48 – VIBRATION AND SEISMIC CONTROLS FOR HVAC PIPING AND EQUIPMENT

PART 1 - GENERAL

1.1 GENERAL REQUIREMENTS

A. The requirements of the General Conditions and Supplementary Conditions apply to all work herein.

B. This Section and Section 23 02 00 – Basic Materials and Methods are part of each Division 23 Section which references the vibration control products specified herein.

1.2 WORK INCLUDED

A. Vibration and sound control products.

1.3 QUALITY ASSURANCE

A. Manufacturer's Qualifications: Firms regularly engaged in manufacture of vibration control products of type, size, and capacity required, whose products have been in satisfactory use in similar service for not less than 5 years.

B. Vibration and sound control products shall conform to ASHRAE criteria for average noise criteria curves for all equipment at full load conditions.

C. Unless otherwise indicated, sound and vibration control products shall be provided by a single manufacturer.

1.4 SUBMITTALS

A. SHOP DRAWINGS: Indicate size, material, and finish. Show locations and installation procedures. Include details of joints, attachments, and clearances.

B. PRODUCT DATA: Submit schedules, charts, literature, and illustrations to indicate the performance, fabrication procedures, product variations, and accessories.

PART 2 - PRODUCTS

2.1 ACCEPTABLE MANUFACTURERS

A. Amber/Booth Company, Inc.

B. Mason Industries, Inc.

C. Kinetics Noise Control, Inc.

2.2 GENERAL

A. Provide vibration isolation supports for equipment, piping and ductwork, to prevent transmission of vibration and noise to the building structure that may cause discomfort to the occupants.

B. Model numbers of Amber/Booth products are included for identification. Products of the additional manufacturers will be acceptable provided they comply with all the requirements of this specification.

2.3 SUSPENDED AIR HANDLING UNITS

A. Provide Amber/Booth HRS-2 combination spring and rubber-in-shear isolation hanger sized for 2'' static deflection.

B. If suspended air handling units are furnished with internal vibration isolation option, furnish Amber/Booth HR rubber-in-shear isolation hangers sized for approximately ½'' deflection to address high frequency break-out.

2.4 SUSPENDED FANS AND FAN COIL UNITS

A. Provide Amber/Booth HS spring hangers sized for 1'' static deflection.

2.5 PIPING

A. Provide spring and rubber-in-shear hangers, Amber/Booth HRS in mechanical equipment rooms, for a minimum distance of 50 feet from isolated equipment for all chilled water and hot water piping 1-1/2'' diameter and larger. Springs shall be sized for 1'' deflection.

B. Floor supported piping is required to be isolated with Amber/Booth AW-1 open springs sized for 1'' deflection.

2.09 CORROSION PROTECTION

A. All vibration isolators shall be designed and treated for resistance to corrosion.

B. Steel components: PVC coated or phosphate coated and painted with industrial grade enamel. Nuts, bolts, and washers: zinc-electroplated.

PART 3 - EXECUTION

3.1 All equipment shall be installed in accordance with the manufacturer's recommendations and printed installation instructions.

3.2 All items required for a complete and proper installation are not necessarily indicated on the plans or in the specifications. Provide all items required as per manufacturer's requirements.

3.3 If internal isolation option is used on air handling units, the mechanical contractor shall verify proper adjustment and operation of isolators prior to start-up. All shipping brackets and temporary restraint devices shall be removed.

3.4 The vibration isolation supplier shall certify in writing that he has inspected the installation and that all external isolation materials and devices are installed correctly and functioning properly.

END OF SECTION

SECTION 23 05 53 – IDENTIFICATION FOR HVAC PIPING AND EQUIPMENT

PART 1 - GENERAL

1.1 GENERAL REQUIREMENTS

A. The requirements of the General Conditions and Supplementary Conditions apply to all work herein.

B. Section 23 02 00 – Basic Materials and Methods is included as a part of this Section as though written in full in this document.

1.2 SCOPE

Scope of the Work shall include the furnishing and complete installation of the equipment covered by this Section, with all auxiliaries, ready for owner's use.

1.3 Refer to Architectural Sections for additional requirements.

PART 2 - PRODUCTS

2.1 VALVE AND PIPE IDENTIFICATION

A. Valves:

1. All valves shall be identified with a 1-1/2" diameter brass disc wired onto the handle. The disc shall be stamped with 1/2" high depressed black filled identifying numbers. These numbers shall be numerically sequenced for all valves on the job.
2. The number and description indicating make, size, model number and service of each valve shall be listed in proper operational sequence, properly typewritten. Three copies to be turned over to Owner at completion.
3. Tags shall be fastened with approved meter seal and 4 ply 0.018 smooth copper wire. Tags and fastenings shall be manufactured by the Seton Name Plate Company or approved equal.
4. All valves shall be numbered serially with all valves of any one system and/or trade grouped together.

B. Pipe Marking:

1. All interior visible piping located in accessible spaces such as above accessible ceilings, equipment rooms, attic space, under floor spaces, etc., shall be identified with all temperature pipe markers as manufactured by W.H. Brady Company, 431 West Rock Ave., New Haven, Connecticut, or approved equal.
2. All exterior visible piping shall be identified with UV and acid resistant outdoor grade acrylic plastic markers as manufactured by Set Mark distributed by Seton (Name plate Company Factory location 20 Thompson Road, Branford, Connecticut) or approved equal.
3. Generally, markers shall be located on each side of each and every partition, on each side of every tee, on each side of every valve and/or valve group, on each side of every piece of equipment, and, for straight runs, at equally spaced intervals not to exceed 75 feet. In congested area, marks shall be placed on each pipe at the points where it enters and leaves the area and at the point of connection of each piece of equipment and automatic control valve. All markers shall have directional arrows.
4. Markers shall be installed after final painting of all piping and equipment and in

such a manner that they are visible from the normal maintenance position. Manufacturer's installation instructions shall be closely followed.

5. Markers shall be colored as indicated below per ANSI/OSHA Standards:

SYSTEM	COLOR	LEGEND
Hot Water	Reddish Orange	Hot Water Supply Return
Compressed Air	Blue	Compressed Air
Oxygen	Yellow	Oxygen
Nitrogen	Green	Nitrogen
Deionized Water	Green	Deionized Water
Steam	Yellow	Steam Supply Steam Return

C. Pipe Painting:

1. All piping exposed to view shall be painted as indicated or as directed by the Architect in the field. Confirm all color selections with Architect prior to installation.
2. All piping located in mechanical rooms and exterior piping shall be painted as indicated below:

System	Color
Heating Hot Water Supply and Return	Reddish Orange

2.2 EQUIPMENT IDENTIFICATION

A. Mechanical equipment shall be identified by means of nameplates permanently attached to the equipment. Nameplates shall be engraved laminated plastic or etched metal. Submittals shall include dimensions and lettering format for approval. Attachment shall be with escutcheon pins, self-tapping screws, or machine screws.

PART 3 - EXECUTION

3.1 All labeling equipment shall be installed as per manufacturer's printed installation instructions.

3.2 All items required for a complete and proper installation are not necessarily indicated on the plans or in the specifications. Contractors price shall include all items required as per manufacturer's requirements.

3.3 All piping shall be cleaned of rust, dirt, oil and all other contaminants prior to painting. Refer to Division 9 for Architect's required paint system(s).

END OF SECTION

SECTION 23 05 93 - TESTING, ADJUSTING, AND BALANCING

PART 1 - GENERAL

1.1 GENERAL REQUIREMENTS

A. The requirements of the General Conditions and Supplementary Conditions apply to all work herein.

B. Section 23 02 00 – Basic Materials and Methods is included as a part of this Section as though written in full in this document.

1.2 RELATED DOCUMENTS

Approved submittal date on equipment installed, to accomplish the test procedures, outlined under paragraph 3.1 of this Section, will be provided by the Contractor.

1.3 DESCRIPTION

A. The TAB of the air conditioning systems shall be performed by an impartial technical firm whose operations are limited only to the field of professional TAB. The TAB work will be done under the direct supervision of a qualified engineer employed by the TAB firm.

B. The TAB firm will be responsible for inspecting, adjusting, balancing, and logging the date on the performance of fans, dampers in the duct system, and air distribution devices. The Contractor and the various Subcontractors of the equipment installed shall cooperate with the TAB firm to furnish necessary data on the design and proper applications of the system components and provide labor and material required to eliminate deficiencies or malperformance.

1.4 QUALITY ASSURANCE

A. QUALIFICATIONS OF CONTRACTOR PERSONNEL: Submit evidence to show that the personnel who shall be in charge of correcting deficiencies for balancing the systems are qualified. The Owner and Engineer reserve the right to require that the originally approved personnel be replaced with other qualified personnel if, in the Owner and Engineer's opinion, the original personnel are not qualified to properly place the system in condition for balancing.

B. QUALIFICATIONS OF TAB FIRM PERSONNEL:

1. A minimum of one registered Professional Engineer licensed in the State, is required to be in permanent employment of the firm.
2. Personnel used on the jobsite shall be either Professional Engineers or technicians, who shall have been permanent, full time employees of the firm for a minimum of six months prior to the start of Work for that specified project.
3. Evidence shall be submitted to show that the personnel who actually balance the systems are qualified. Evidence showing that the personnel have passed the tests required by the Associated Air Balance Council (AABC) shall be required.

C. CALIBRATION LIST: Submit to the Engineer for approval, a list of the gauges, thermometers, velometer, and other balancing devices to be used in balancing the system. Submit evidence to show that the balancing devices are properly calibrated before proceeding with system balancing.

PART 2 - PRODUCTS (NOT USED)

PART 3 - EXECUTION

3.1 SERVICES OF THE CONTRACTOR

A. The Drawings and Specifications have indicated valves, dampers, and miscellaneous adjustment devices for the purpose of adjustment to obtain optimum operating conditions. Install these devices in a manner that leaves them accessible, and provide access as requested by the TAB firm.

B. Have systems complete and in operational readiness prior to notifying the TAB firm that the project is ready for their services, and certify in writing to the Architect and Owner that such a condition exists.

C. As a part of the Work of this Section, make changes in the sheaves, belts, and dampers or the addition of dampers required for correct balance of the new work as required by the TAB firm, at no additional cost to the Owner.

D. Fully examine the existing system to be balanced, to determine whether or not sufficient volume dampers, balancing valves, thermometers, gauges, pressure and temperature taps, means of reading static pressure and total pressure in duct systems, means of determining water flow, and other means of taking data needed for proper water and air balancing are existing. Submit to the Engineer in writing a listing of omitted items considered necessary to balance existing systems. Submit the list and proposal as a cost add item.

E. Verify that fresh air louvers are free of blockage, coils are clean and fresh air ducts to each air handling unit have individually adjustable volume regulating dampers.

F. Provide, correct, repair, or replace deficient items or conditions found during the testing, adjusting, and balancing period.

G. In order that systems may be properly tested, balanced, and adjusted as specified, operate the systems at no expense to the Owner for the length of time necessary to properly verify their completion and readiness for TAB period.

H. Project construction schedules shall provide time to permit the successful completion of TAB services prior to Substantial Completion. Complete, operational readiness, prior to commencement of TAB services, shall include the following services of the Contractor:
   1. Construction status of building shall permit the closing of doors, windows, ceilings installed and penetrations complete, to obtain project operating conditions.
   2. AIR DISTRIBUTION SYSTEMS:
      a. Verify installation for conformity to design. Supply, return, and exhaust ducts terminated and pressure tested for leakage as specified.
      b. Volume and fire dampers properly located and functional. Dampers serving requirements of minimum and maximum outside air, return and relief shall provide tight closure and full opening, smooth and free operation.
      c. Supply, return, exhaust and transfer grilles, registers and diffusers shall be installed.
      d. Air handling systems, units and associated apparatus, such as heating and cooling coils, filter sections, access doors, etc., shall be blanked and sealed to eliminate excessive bypass or leakage of air.
      e. Fans (supply and exhaust) operating and verified for freedom from vibrations, proper fan rotation and belt tension; overload heater elements

shall be of proper size and rating; record motor amperage and voltage and verify that these functions do not exceed nameplate ratings.

f. Furnish or revise fan drives or motors as necessary to attain the specified air volumes.

3. WATER CIRCULATING SYSTEMS:

a. Position valves pertinent to system design and require operation to permit full flow of water through system components. Operate hydronic systems under full flow conditions until circulating water is clean. Remove and clean strainers as required during this cycle of operation.

b. For retrofit projects, record each existing pump motor amperage and voltage. Readings shall not exceed nameplate rating.

c. Verify, on new equipment, electrical starter overload heater elements to be of proper size and rating.

d. Ensure that water circulating systems shall be full of water and free of air; expansion tanks set for proper water level, and air vents installed at high points of systems and operating freely. Advise Engineer of deficiencies.

e. Check and set operating temperatures of heat exchangers to design requirements.

f. The various existing water circulating systems shall be cleaned, filled, purged of air, and put into operation before hydronic balancing.

4. AUTOMATIC CONTROLS:

a. Verify that control components are installed in accordance with project documents and functional, electrical interlocks, damper sequences, air and water resets, fire and freeze stats.

b. Controlling instruments shall be functional and set for design operating conditions. Factory precalibration of room thermostats and pneumatic equipment will not be acceptable.

c. The temperature regulation shall be adjusted for proper relationship between the controlling instruments and calibrated by the TAB Contractor. Advise Engineer of deficiencies or malfunctions.

I. Contractor shall repair any insulation removed from piping system by TAB Contractor during water balancing.

3.2 SERVICES OF THE TAB FIRM

A. The TAB firm will act as liaison between the Owner, Engineer, and the Contractor and inspect the installation of mechanical piping system, sheet metal work, temperature controls and other component parts of the heating, air conditioning and ventilating systems being retrofitted, repaired, or added under this Contract. The reinspection of the Work will cover that part related to proper arrangement and adequate provision for the testing and balancing and will be done when the Work is 80 percent complete.

B. Upon completion of the installation and start-up of the mechanical equipment, to check, adjust, and balance system components to obtain optimum conditions in each conditioned space in the building. Prepare and submit to the Engineer complete reports on the balance and operations of the systems.

C. Measurements and recorded readings of air, water, and electricity that appear in the reports will be done by the permanently employed technicians or engineers of the TAB firm.

D. Make an inspection in the building during the opposite season from that in which the initial adjustments were made. At the time, make necessary modifications to the initial adjustments required to produce optimum operation of system components to affect the proper conditions as indicated on the Drawings. At time of opposite season check-out,

the Owner's representative will be notified before readings or adjustments are made.

E. In fan systems, the air quantities indicated on the Drawings may be varied as required to secure a maximum temperature variation of two degrees within each separately controlled space, but the total air quantity indicated for each zone must be obtained. It shall be the obligation of the Contractor to furnish or revise fan drive and motors if necessary, without cost to the Owner, to attain the specified air volumes.

F. Contractor shall utilize ultrasonic flow meter to balance water flow of existing water system if the original pressure drop data is not available. Contractor shall remove insulation as necessary to use flow meter.

3.3 PROFESSIONAL REPORT

A. Before the final acceptance of the report is made, the TAB firm will furnish the Engineer the following data to be approved by the Owner and Engineer:

1. Summary of main supply, return and exhaust duct pitot tube traverses and fan settings indicating minimum value required to achieve specified air volumes.
2. A listing of the measured air quantities at each outlet corresponding to the temperature tabulation as developed by the Engineer and TAB firm.
3. Air quantities at each return and exhaust air handling device.
4. Static pressure readings entering and leaving each supply fan, exhaust fan, filter, coil, balancing dampers and other components of the systems. Including the retrofit Work. These readings will be related to performance curves in terms of the CFM handled if available.
5. Motor current readings at each equipment motor on load side of capacitors. The voltages at the time of the reading shall be listed.
6. The final report shall certify test methods and instrumentation used, final velocity reading obtained, temperatures, pressure drops, RPM of equipment, amperage of motors, air balancing problems encountered, recommendations and uncompleted punch list items. The test results will be recorded on standard forms.
7. A summary of actual operating conditions shall be included with each system outlining normal and ventilation cycles of operation. the final report will act as a reference of actual operating conditions for the Owner's operating personnel.

3.4 BALANCING AIR CONDITIONING SYSTEM

A. GENERAL:

1. Place all equipment into full operation, and continue operating during each working day of balancing and testing. If the air conditioning system is balanced during Off-Peak cooling season Contractor shall return to rebalance air side system as required to put system in proper balance at that season.
2. The Contractor shall submit detailed balancing and recording forms for approval. After approval by the Engineer, prepare complete set of forms for recording test data on each system. All Work shall be done under the supervision of a Registered Professional Engineer. All instruments used shall be accurately calibrated to within 1% of scale and maintained in good working order.
3. Upon completion of the balancing and testing, the TAB Contractor shall compile the test data in report forms, and forward five copies to the Engineer for evaluation.
4. The final report shall contain logged results of all tests, including such data as:
   a. Tabulation of air volume at each outlet.
   b. Outside dry bulb and wet bulb temperature.

c. Inside dry bulb and wet bulb temperatures in each conditioned space room or area.
d. Actual fan capacities and static pressures. Motor current and voltage readings at each fan.

B. AIR SYSTEMS: Perform the following operations as applicable to balance and test systems:

1. Check fan rotation.
2. Check filters (balancing shall be done with clean filters).
3. Test and adjust blower rpm to design requirements.
4. Test and record motor full load amperes.
5. Test and record system static pressures, suction and discharge.
6. Test and adjust system for design cfm, return air and outside air (±2%). Change-out fan sheaves as required to balance system.
7. Test and record entering air temperatures, db and wb.
8. Test and record leaving air temperatures, db and wb.
9. Adjust all zones to design cfm (±2%).
10. Test and adjust each diffuser, grille, and register to within 5% of design.

C. AIR DUCT LEAKAGE: (From SMACNA Duct Standards latest edition) Test all ductwork (designed to handle over 1000 CFM) as follows:

1. Test apparatus
   The test apparatus shall consist of:
   a. A source of high pressure air--a portable rotary blower or a tank type vacuum cleaner.
   b. A flow measuring device consisting of straightening vanes and an orifice plate mounted in a straight tube with properly located pressure taps. Each orifice assembly shall be accurately calibrated with its own calibration curve. Pressure and flow readings shall be taken with U-tube manometers.
2. Test Procedures
   a. Test for audible leaks as follows:
      1) Close off and seal all openings in the duct section to be tested. Connect the test apparatus to the duct by means of a section of flexible duct.
      2) Start the blower with its control damper closed.
      3) Gradually open the inlet damper until the duct pressure reaches 1.2 times the standard designed duct operating pressure.
      4) Survey all joints for audible leaks. Mark each leak and repair after shutting down blower. Do not apply a retest until sealants have set.
   b. After all audible leaks have been sealed, the remaining leakage should be measured with the orifice section of the test apparatus as follows:
      1) Start blower and open damper until pressure in duct reaches 25% in excess of designed duct operating pressure.
      2) Read the pressure differential across the orifice on manometer No. 2. If there is no leakage, the pressure differential will be zero.
      3) Total allowable leakage shall not exceed one (1) percent of the total system design air flow rate. When partial sections of the duct system are tested, the summation of the leakage for all sections shall not exceed the total allowable leakage.

4) Even though a system may pass the measured leakage test, a concentration of leakage at one point may result in a noisy leak which must be corrected.

D. DX SYSTEMS:

1. Test and record suction and discharge pressures at each compressor and record ambient air temperature entering the condensing coils.
2. Test and record unit full load amps and voltage.
3. Test and record staging and unloading of unit required by sequence of operation or drawing schedule.

E. Automatic temperature controls shall be calibrated; and all thermostats and dampers adjusted so that the control system is in proper operating condition, subject to the approval of the Engineer/Owner.

F. The TAB Contractor shall report to Engineer all air distribution devices or other equipment that operate noisily so that corrective measures may be implemented by the Contractor at no additional cost to the Owner or Architect/Engineer.

END OF SECTION

SECTION 23 07 13 - DUCT INSULATION

PART 1 - GENERAL

1.1 GENERAL REQUIREMENTS

A. The requirements of the General Conditions and Supplementary Conditions apply to all work herein.

B. Section 23 02 00 - Basic Materials and Methods is included as a part of this Section as though written in full in this document.

1.2 WORK INCLUDED

A. Ductwork system insulation.

1.3 RELATED SECTIONS

A. Section 23 05 29 - Hangers and Support for HVAC Piping and Equipment

B. Section 23 05 53 – Identification for HVAC Piping and Equipment

C. Section 23 31 13 – Metal Ductwork

1.4 REFERENCE STANDARDS

A. ASTM International. (ASTM)

B. American Society of Heating, Refrigerating, and Air Conditioning Engineers, Inc. (ASHRAE).

C. North American Insulation Manufacturers Association (NAIMA).

D. National Fire Protection Association (NFPA).

E. Sheet Metal and Air Conditioning Contractors National Association, Inc. (SMACNA).

F. Underwriter's Laboratories (UL).

G. Underwriter's Laboratories Environmental (UL Environment).

1.5 QUALITY ASSURANCE

A. Installer’s Qualifications: Firm with at least 5 years successful installation experience on projects with mechanical insulations similar to that required for this project.

B. Flame/Smoke Ratings: Provide composite mechanical insulation (insulation, jackets, coverings, sealers, mastics and adhesives) that is UL Classified per UL 723 or with flame-spread index of 25 or less, and smoke-developed index of 50 or less, as tested by ASTM E 84 (NFPA 255) method.

1. Exception: Outdoor mechanical insulation may have flame spread index of 75 and smoke developed index of 150.

C. Duct and plenum insulation shall comply with minimum R-value requirements of 2015 International Energy Conservation Code and ASHRAE 90.1 - 2013.

D. Adhesive and other material shall comply with NFPA and NBFU Standards No. 90A and 90B.

1.6 WARRANTY

A. Warrant the Work specified herein for one year against becoming unserviceable or causing an objectionable appearance resulting from either defective, or nonconforming materials and workmanship.

B. Defects shall include, but not be limited to, the following:

1. Mildewing.
2. Peeling, cracking, and blistering.
3. Condensation on exterior surfaces.

1.7 SUBMITTALS

A. SHOP DRAWINGS: Indicate size, material, and finish. Show locations and installation procedures. Include details of joints, attachments, and clearances.

B. PRODUCT DATA: Submit schedules, charts, literature, and illustrations to indicate the performance, fabrication procedures, product variations, and accessories.

1.8 DELIVERY, STORAGE AND HANDLING

A. Deliver insulation, coverings, cements, adhesives, and coatings to site in unopened containers with manufacturer's stamp, clearly labeled with flame and smoke rating, affixed showing fire hazard indexes of products.

B. Protect insulation against dirt, water and chemical and mechanical damage. Do not install damaged or wet insulation; remove such from project site.

PART 2 - PRODUCTS

2.1 GENERAL DESCRIPTION

A. The type of insulation and its installation shall be in strict accordance with these specifications for each service, and the application technique shall be as recommended by the manufacturer. All insulation types, together with adhesives and finishes shall be submitted and approved before any insulation is installed.

B. A sample quantity of each type of insulation and each type of application shall be installed and approval secured prior to proceeding with the main body of the Work.

2.2 ACCEPTABLE MANUFACTURERS

A. Glass mineral wool materials shall be as manufactured by Knauf Insulation, Certain-Teed, Johns-Manville or Owens-Corning and shall have the same thermal properties, density, fire rating, vapor barrier, etc., as the types specified herein, subject to review by the Engineer.

B. Adhesives shall be as manufactured by Minnesota Mining, Arabol, Benjamin-Foster, Armstrong or Insulmastic, Inc., and shall have the same adhesive properties, fire rating, vapor seal, etc., as the types specified herein, subject to review by the Engineer.

C. Ceramic fiber materials shall be as manufactured by Primer Refractories, A.P. Green

Refractories or approved equal.

PART 3 - EXECUTION

3.1 GENERAL

A. All insulation shall be installed in accordance with the manufacturer's recommendations and printed installation instructions.

B. All items required for a complete and proper installation are not necessarily indicated on the plans or in the specifications. Provide all items required as per manufacturer's requirements.

3.2 EXTERNAL DUCT INSULATION

A. Fasten all longitudinal and circumferential laps with outward clinching staples 3" on center. On rectangular ducts over 24" wide apply as above and hold insulation in place on bottom side with mechanical pins and clips on 12" centers.

B. Seal all joints, fastener penetrations and other breaks in vapor barrier with 3-inch wide strips of white glass fabric embedded between two coats of vapor barrier mastic, Childers CP-30 or approved equal.

C. All external duct insulation shall be Knauf Insulation Atmosphere Duct Wrap with ECOSE Technology, Johns Manville Microlite EQ duct wrap insulation with reinforced aluminum facing or approved equal.

D. External duct wrap is required on all outside air ducts, supply and return air ducts that are not internally insulated. External duct wrap is also required on all exhaust and relief air ducts that are used in airside energy recovery systems. Any exhaust ductwork located in an unconditioned space shall also be provided with external duct wrap. Duct wrap shall be provided as follows:

1. 1½” thick, 1.0 PCF density minimum; minimum installed R-value of 4.2 when ducts are located in conditioned spaces.
2. 2” thick with a minimum installed R-value of 6 when ducts are located in unconditioned spaces, such as ceiling plenum space.

E. Any ductwork located in an air plenum that is comprised of materials that do not comply with the 25/50 flame and smoke rating per ASTM E 84 testing requirements shall be provided with a single layer of duct wrap to establish a noncombustible rating per ASTM E 136. Duct wrap products which are approved for such non-compliant combustible duct materials located in air plenums shall be 3M Fire Barrier Plenum Wrap 5A+ or Unifrax FyreWrap 0.5 Plenum. Insulation products for this application shall be installed in strict accordance with the manufacturer’s instructions.

3.3 DUCT LINER

A. Duct liner shall be kept clean and dry during transportation, storage, installation, and throughout the construction process care should be taken to protect the liner from exposure to the elements or damage from mechanical abuse.

B. All portions of duct designed to receive duct liner shall be completely covered with liner as specified. The smooth, black, mat facing or acrylic-coated surfaces with flexible glass cloth reinforcement shall face the airstream. All duct liner shall be cut to assure tight, overlapped corner joints. The top pieces shall be supported by the sidepieces. Duct liner

shall be installed following the guidelines in the NAIMA “Duct Liner Installation Standard”.

C. The duct liner shall be tested according to erosion test method in ASTM C 1071 and shall be guaranteed to withstand velocities in the duct system up to 6000 fpm without surface erosion.

D. Duct liner shall be adhered to the sheet metal with full coverage of an approved adhesive that conforms to ASTM C 916, and all exposed leading edges and transverse joints shall be coated with Permacote factory-applied or field-applied edge coating and shall be neatly butted without gaps. Shop or field cuts shall be liberally coated with Johns Manville SuperSeal® duct butter and Edge Treatment or approved adhesive.

E. Metal nosings shall be securely installed over transversely oriented liner edges facing the airstream at forward discharge and at any point where lined duct is preceded by unlined duct.

F. When velocity exceeds 4000 fpm (20.3 m/sec), use metal nosing on every leading edge. Nosing may be formed on duct or be channel or zee attached by screws, rivets or welds.

G. The liner shall further be secured with Graham welding pins and washers on not more than 18 inch centers both vertical and horizontal surfaces, and the pins and washers shall be pointed up with adhesive.

H. Duct liner shall be Knauf Insulation Atmosphere Duct Liner with ECOSE Technology, Johns Manville Linacoustic RC duct liner with factory-applied edge coating and acrylic coating on the mat surface of airstream side or approved equal. The liner shall meet the Life Safety Standards as established by NFPA 90A and 90B, FHC 25/50 and Limited Combustibility and the air stream surface coating should contain an immobilized, EPA-registered, anti-microbial agent so it will not support microbial growth as tested in accordance with ASTM G21 and G22. The duct liner shall conform to the requirements of ASTM C 1071, UL 2824, with an NRC not less than .70 as tested per ASTM C 423 using a Type “A” mounting, and a thermal conductivity no higher than 0.24 BTU•in/(hr•ft^2•°F) at 75°F mean temperature.

I. Line supply and return ductwork at connection of HVAC unit to a point of 15 feet upstream and downstream of the equipment and in return air boots. Attach with full cover coat of cement, duct dimensions up to 16 inches; provide stick clips or screws and cap for dimensions over 16 inches, spaced 16 inches o.c. maximum. Provide sheet metal liner cap over all leading edges of internal insulation exposed to air stream.

J. Duct liner shall be provided as follows:

1. 1” Thick, 1.5 PCF density minimum; minimum installed R-value of 4.2 when ducts are located in conditioned spaces.
2. 1 ½” Thick with a minimum installed R-value of 6 when ducts are located in unconditioned spaces, such as ceiling plenum space.
3. 2” Thick with a minimum installed R-value of 8 when ducts are located outdoors.

3.4 EXPOSED DUCTWORK LOCATED INDOORS

A. Duct routed exposed in occupied spaces shall be double wall.

B. Round and flat oval duct routed exposed shall be double wall with perforated inner liner and 1’’ thick layer of glass mineral wool insulation as manufactured by United McGill Company model no. Acousti-27 or approved equal. Insulation density shall be a minimum of 1.0 PCF.

3.5 AIR DEVICE AND MISCELLANEOUS DUCT INSULATION

A. The backside of all supply air devices shall be insulated with taped and sealed 1½ inch thick external duct wrap.

B. The contractor shall install an additional layer of 1-½ inch thick external glass mineral wool duct wrap on any portion of the supply air, return air, outside air, or exhaust air system that has condensation forming during any period of operation. The insulation shall be taped and vapor-sealed and located until all evidence of the condensation has been eliminated, at no additional cost to the Owner.

3.6 KITCHEN GREASE HOOD EXHAUST DUCT

A. All type I kitchen range hood exhaust duct shall be enclosed with 2-hour fire rated enclosure.

B. The duct enclosure shall be sealed around the duct at the points of penetration with an approved fire barrier sealant per ASTM E 1966. Sealant shall be 3M CP 25WB+ or 303 fire barrier caulk and putty.

C. The enclosure shall be separated from the duct by at least 3 inches and not more than 12 inches.

D. Cleanout openings at exhaust duct with access openings at the fire rated enclosure and access doors shall be provided at each duct offset and as required for proper operation and maintenance.

E. As an alternate method, the contractor may use two layers of 2-hour fire rated duct wrap such as 3M Fire Barrier Duct Wrap 615+ or Unifrax FyreWrap Elite 1.5 in lieu of the fire rated enclosure, provided that all the following constraints are satisfied:

a. Duct wrap system shall be tested per ASTM E 2336 internal fire testing and have an achieved minimum fire resistance rating of 2 hours.
b. Product shall be approved by the local Authority Having Jurisdiction (AHJ).
c. Duct wrap system shall be mechanically attached to the duct using steel banding and/or weld pins per manufacturer's instructions.
d. Duct wrap system shall be installed in strict accordance with the manufacturer's instructions, including but not limited to zero clearance to combustibles at all locations on the wrap surface.

F. Insulation and all other requirements shall be provided per local codes.

3.7 DRYER VENT DUCT

A. All dryer vent duct routed within an air plenum shall be enclosed within a 1-hour fire rated enclosure.

B. The duct enclosure shall be sealed around the duct at the points of penetration with an approved fire barrier sealant per ASTM E 1966. Sealant shall be 3M CP 25WB+ or 303 fire barrier caulk and putty.

C. The enclosure shall be separated from the duct by at least 3 inches and not more than 12 inches.

D. Cleanout openings at exhaust duct with access openings at the fire rated enclosure and

access doors shall be provided at each duct offset and as required for proper operation and maintenance.

E. As an alternate method, the contractor may use a single layer of 1-hour fire rated duct wrap such as 3M Fire Barrier Duct Wrap 615+ or Unifrax FyreWrap Elite 1.5 in lieu of the fire rated enclosure, provided that all the following constraints are satisfied:

a. Duct wrap system shall be tested per ASTM E 2336 internal fire testing and have an achieved minimum fire resistance rating of 1 hour.
b. Product shall be approved by the local Authority Having Jurisdiction (AHJ).
c. Duct wrap system shall be mechanically attached to the duct using steel banding and/or weld pins per manufacturer's instructions.
d. Duct wrap system shall be installed in strict accordance with the manufacturer's instructions, including but not limited to zero clearance to combustibles at all locations on the wrap surface.

F. Insulation and all other requirements shall be provided per local codes.

END OF SECTION

SECTION 23 07 16 - HVAC EQUIPMENT INSULATION

PART 1 – GENERAL

1.1 GENERAL REQUIREMENTS

A. The requirements of the General Conditions and Supplementary Conditions apply to all work herein.

B. Section 23 02 00 – Basic Materials and Methods is included as a part of this Section as though written in full in this document.

1.2 SCOPE

A. Scope of the Work shall include the furnishing and complete installation of the equipment covered by this Section, with all auxiliaries, ready for Owner's use.

B. Work specified elsewhere.

1. Basic materials and methods.
2. Piping systems.
3. Air distribution equipment.

1.3 REFERENCE STANDARDS

A. ASTM International. (ASTM)

B. American Society of Heating, Refrigerating, and Air Conditioning Engineers, Inc. (ASHRAE).

C. North American Insulation Manufacturers Association (NAIMA).

D. National Fire Protection Association (NFPA).

E. Sheet Metal and Air Conditioning Contractors National Association, Inc. (SMACNA).

F. Underwriter's Laboratories (UL).

G. Underwriter's Laboratories Environmental (UL Environment).

1.4 WARRANTY

A. Warrant the Work specified herein for one year against becoming unserviceable or causing an objectionable appearance resulting from either defective or nonconforming materials and workmanship.

B. Defects shall include, but not be limited to, the following:

1. Mildewing.
2. Peeling, cracking, and blistering.
3. Condensation on exterior surfaces.

1.5 SUBMITTALS

A. SHOP DRAWINGS: Indicate size, material, and finish. Show locations and installation procedures. Include details of joints, attachments, and clearances.

B. PRODUCT DATA: Submit schedules, charts, literature, and illustrations to indicate the performance, fabrication procedures, product variations, and accessories.

1.6 DELIVERY AND STORAGE

A. Deliver insulation, coverings, cements, adhesives, and coatings to site in unopened containers with manufacturer's stamp, clearly labeled with flame and smoke rating, affixed showing fire hazard indexes of products.

B. Protect insulation against dirt, water and chemical and mechanical damage. Do not install damaged or wet insulation; remove such from project site.

PART 2 – PRODUCTS

2.1 It is the intent of these specifications to secure superior quality workmanship resulting in an absolutely satisfactory installation of insulation from the standpoint of both function and appearance. Particular attention shall be given to valves, fittings, pumps, etc., requiring low temperature insulation to insure full thickness of insulation and proper application of the vapor seal. All flaps of vapor barrier jackets and/or canvas covering must be neatly and securely smoothed and sealed down.

2.2 The type of insulation and its installation shall be in strict accordance with these specifications for each service, and the application technique shall be as recommended by the manufacturer. All insulation types, together with adhesives and finishes shall be submitted and reviewed before any insulation is installed.

2.3 A sample quantity of each type of insulation and each type application shall be installed and reviewed prior to proceeding with the main body of the work. Condensation caused by improper installation of insulation shall be corrected by Installing Contractor. Any damage caused by condensation shall be made good at no cost to the Owner or Architect/Engineer.

2.4 Glass mineral wool materials as manufactured by Knauf Insulation, Owens/Corning, Certain-Teed or Johns Manville will be acceptable, if they comply with the specifications.

2.5 All insulation shall have composite (insulation, jacket or facing, and adhesive used to adhere the facing or jacket to insulation) fire and smoke hazard as tested by Procedure ASTM E084, NFPA 255 and UL 723 not exceeding:

Flame Spread 25
Smoke Developed 50

2.6 All HVAC equipment insulation shall comply with minimum requirements of 2015 International Energy Conservation Code and ASHRAE 90.1 - 2013.

2.7 Accessories, such as adhesives, mastics and cements shall have the same component ratings as listed above.

2.8 All products or their shipping cartons shall have a label affixed, indicating flame and smoke ratings do not exceed the above requirements.

PART 3 – EXECUTION

3.1 All insulation shall be installed in accordance with the manufacturer's recommendations and printed installation instructions.

3.2 All items required for a complete and proper installation are not necessarily indicated on the plans or in the specifications. Provide all items required as per manufacturer's requirements.

3.3 BOILER EXHAUST SYSTEM

A. Insulate boiler stack, breaching and induced draft fan housing in contact with flue gases, with 1-inch thick high temperature, spun glass mineral wool semi-rigid board. Knauf Insulation Elevated Temperature Board with ECOSE Technology, Johns-Manville 1000 Spin-Glass or approved equal, secured between outer facing of 1-inch galvanized wire mesh. Calcium silicate insulation, Johns-Manville Thermo-12 Gold or approved equal, may be applied at the contractor's option followed by application of 1-inch galvanized wire mesh.

B. In exposed areas, apply 1 1/4-inch coat of insulating and finishing cement, Ryder "V" One Coat or approved equal, troweled to a smooth surface. After cement has dried, surfaces shall be weatherproofed using 2 coats of mastic, Childers CP-10, with a layer of white glass cloth reinforcing embedded between coats.

END OF SECTION

SECTION 23 07 19 – HVAC PIPING INSULATION

PART 1 - GENERAL

1.1 GENERAL REQUIREMENTS

A. The requirements of the General Conditions and Supplementary Conditions apply to all work herein.

B. Section 23 02 00 – Basic Materials and Methods is included as a part of this Section as though written in full in this document.

1.2 SCOPE

A. Scope of the Work shall include the furnishing and complete installation of the equipment covered by this Section, with all auxiliaries, ready for Owner's use.

B. Furnish and install piping insulation to:

1. Condensate drain piping.
2. Refrigerant piping.
3. All pipes subject to freezing conditions shall be insulated.

C. Work specified elsewhere.

1. Painting.
2. Pipe hangers and supports.

D. For insulation purpose piping is defined as the complete piping system including supplies and returns, pipes, valves, automatic control valve bodies, fittings, flanges, strainers, thermometer well, unions, reducing stations, and orifice assemblies.

1.3 RELATED SECTIONS

A. Section 23 05 29 - Hangers and Support for HVAC Piping and Equipment

B. Section 23 05 53 – Identification for HVAC Piping and Equipment

C. Section 23 21 13 - Above Ground Hydronic Piping

D. Section 23 23 00 - Refrigerant Piping

1.4 REFERENCE STANDARDS

A. ASTM International. (ASTM)

B. American Society of Heating, Refrigerating, and Air Conditioning Engineers, Inc. (ASHRAE).

C. North American Insulation Manufacturers Association (NAIMA).

D. National Fire Protection Association (NFPA).

E. Sheet Metal and Air Conditioning Contractors National Association, Inc. (SMACNA).

F. Underwriter's Laboratories (UL).

G. Underwriter's Laboratories Environmental (UL Environment).

1.5 WARRANTY

A. Warrant the Work specified herein for one year against becoming unserviceable or causing an objectionable appearance resulting from either defective or nonconforming materials or workmanship.

B. Defects shall include, but not be limited to, the following:

1. Mildewing.
2. Peeling, cracking, and blistering.
3. Condensation on exterior surfaces.

1.6 SUBMITTALS

A. SHOP DRAWINGS: Indicate size, material, and finish. Show locations and installation procedures. Include details of joints, attachments, and clearances.

B. PRODUCT DATA: Submit schedules, charts, literature, and illustrations to indicate the performance, fabrication procedures, project variations, and accessories.

1.7 DELIVERY AND STORAGE

A. Deliver insulation, coverings, cements, adhesives, and coatings to site in unopened containers with manufacturer’s stamp, clearly labeled with flame and smoke rating, affixed showing fire hazard indexes of products.

B. Protect insulation against dirt, water and chemical and mechanical damage. Do not install damaged or wet insulation; remove such from project site.

PART 2 - PRODUCTS

2.1 It is the intent of these specifications to secure superior quality workmanship resulting in an absolutely satisfactory installation of insulation from the standpoint of both function and appearance. Particular attention shall be given to valves, fittings, pumps, etc., requiring low temperature insulation to insure full thickness of insulation and proper application of the vapor seal. All flaps of vapor barrier jackets and/or canvas covering must be neatly and securely smoothed and sealed down.

2.2 The type of insulation and its installation shall be in strict accordance with these specifications for each service, and the application technique shall be as recommended by the manufacturer. All insulation types, together with adhesives and finishes shall be submitted and reviewed prior to installation.

2.3 A sample quantity of each type of insulation and each type application shall be installed and accepted prior to proceeding with the main body of the work. Condensation caused by improper installation of insulation shall be corrected by Installing Contractor. Any damage caused by condensation shall be made good at no cost to the Owner or Architect/Engineer.

2.4 All insulation shall have composite (insulation, jacket or facing, and adhesive used to adhere the facing or jacket to insulation) fire and smoke hazard as tested by Procedure ASTM E 84, NFPA 255 and UL 723 not exceeding:

Flame Spread 25

Smoke Developed 50

2.5 All HVAC piping insulation shall comply with minimum requirements of 2015 International Energy Conservation Code and ASHRAE 90.1 - 2013.

2.6 Accessories, such as adhesives, mastics and cements shall have the same component ratings as listed above.

2.7 All products or their shipping cartons shall have a label affixed, indicating flame and smoke ratings do not exceed the above requirements.

2.8 Any piping located in an air plenum that is comprised of materials that do not comply with the 25/50 flame and smoke rating per ASTM E 84 testing requirements shall be provided with a single layer of high-temperature insulation to establish a noncombustible rating per ASTM E 136. Insulation products which are approved for such non-compliant combustible piping materials located air plenums shall be 3M Fire Barrier Plenum Wrap 5A+ or Unifrax FyreWrap 0.5 Plenum. Insulation products for this application shall be installed in strict accordance with the manufacturer's instructions.

2.9 APPROVED MANUFACTURERS

A. Calcium silicate materials shall be as manufactured by Johns Manville.

B. Glass mineral wool materials shall be as manufactured by Knauf Insulation, Johns Manville or Owens-Corning and shall have the same thermal properties, density, fire rating, vapor barrier, etc., as the types specified herein, subject to review by the Engineer.

C. Adhesives shall be as manufactured by Childers, Foster, HB Fuller or Armacell, and shall have the same adhesive properties, fire rating, vapor seal, etc., as the types specified herein, subject to review by the Engineer.

D. Flexible elastomeric cellular thermal insulation by Armacell.

E. Phenolic foam insulation shall be as manufactured by Kooltherm Insulation (Koolphen).

F. Metal jacketing and fitting covers shall be as manufactured by Childers or RPR Products.

2.10 MATERIALS

A. CONDENSATE DRAINAGE PIPING: Flexible elastomeric cellular thermal insulation, model "AP-2000", fire rated for use in environmental air plenums; insulation not required when piping is exposed on roof.

B. REFRIGERANT PIPING: Flexible elastomeric cellular thermal insulation, model "AP-2000", fire rated for use in environmental air plenums. Apply manufacturers recommended finish and sealant for exterior applications.

C. METAL JACKETING: Utilize Childers "Strap-On" jacketing. Provide preformed fitting covers for all elbows and tees.

PART 3 - EXECUTION

3.1 All insulation shall be installed in accordance with the manufacturer's recommendations and printed installation instructions, including high density inserts at all hangers and pipe supports to

prevent compression of insulation.

3.2 All items required for a complete and proper installation are not necessarily indicated on the plans or in the specifications. Provide all items required as per manufacturer's requirements.

3.3 Pipes located outdoors or in tunnels shall be insulated same as concealed piping and shall have a jacket of 0.016 inch thick, smooth aluminum with longitudinal modified Pittsburg Z-Lock seam and 2 inch overlap. Jacketing shall be easily removed and replaced without damage. All insulation butt joints shall be sealed with gray silicone. Galvanized banding is not acceptable.

3.4 All insulated piping located over driveways shall have an aluminum shield permanently banded over insulation to protect it from damage from car antennas.

3.5 WATER PIPE INSULATION INSTALLATION

A. The insulation shall be applied to clean, dry pipes with all joints firmly butted together. Where piping is interrupted by fittings, flanges, valves or hangers and at intervals not to exceed 25 feet on straight runs, an isolating seal shall be formed between the vapor barrier jacket and the bare pipe. The seal shall be by the applications of adhesive to the exposed insulation joint faces, carried continuously down to and along 4 inches of pipe and up to and along 2 inches of jacket.

B. Pipe fittings and valves shall be insulated with pre-molded or shop fabricated glass mineral wool covers finished with two brush coats of vapor barrier mastic reinforced with glass fabric.

C. All under lap surfaces shall be clean and free of dust, etc. before the Joint is sealed. These laps shall be firmly rubbed to insure a positive seal. A brush coat of vapor retarder shall be applied to all edges of the vapor barrier jacket.

3.6 STANDBY-GENERATOR ENGINE EXHAUST PIPING

A. Entire engine exhaust pipe from exhaust manifold to outside terminal shall be enclosed in a 1" thick layer of calcium silicate insulation.

B. A second insulating layer of 1" thick calcium silicate shall cover the first layer.

C. Joints for the first and second layer shall be staggered.

D. Apply aluminum jacket over outer layer of insulation.

E. Insulate exhaust muffler in the same manner as the exhaust piping.

3.7 FIRE RATED INSULATION

A. All pipe penetrations through walls and concrete floors shall be fire rated by applying USG Thermafiber in the space between the concrete and the pipe.

B. The penetration shall be additionally sealed by using 3M brand model CP 25 or 303 fire barrier caulk and putty.

C. All fire rating material shall be insulated in accordance with manufacturer's printed instructions.

PART 4 - SCHEDULES

4.1 Provide all HVAC piping insulation to comply with the ASHRAE 90.1 Minimum Thickness Schedule.

4.2	LOW TEMPERATURE SURFACES	MINIMUM INSULATION THICKNESS
A.	Condensate drain lines:	1 inch
B.	Refrigerant Piping	
1.	1½“ and smaller	1 inch
2.	Larger than 1½ inch	1 ½ inch

END OF SECTION

SECTION 23 08 00 – COMMISSIONING OF HVAC SYSTEMS

PART 1 – GENERAL

1.1 RELATED DOCUMENTS

A. Drawings and general provisions of the Contract Documents, including General and Supplementary Conditions and Division 01 Specifications, apply to this section.

B. Related SECTIONS:

1. SECTION 01 91 00 - GENERAL COMMISSIONING REQUIREMENTS

1.2 SUMMARY

A. The commissioning of the HVAC system and associated controls shall be performed by an impartial technical firm hired by the owner. The commissioning provider shall be certified under one or more of the following certifications:

1. CxA – Certified Commissioning Authority – ACG
2. CBCP – Certified Building Commissioning Professional – AEE
3. CCP – Certified Commissioning Professional – BCA
4. CPMP – Certified Process Management Professional – ASHRAE
5. BSC – Building System Commissioning Certification – NEBB

B. The commissioning provider (Commissioning authority) shall be responsible for leading the entire construction team through the commissioning process including, but not limited to, conducting the commissioning kick-off meeting, preparing the commissioning plan, preparing pre-functional checklists, preparing functional test scripts, participation in functional testing and preparation of required documentation and reports.

1.3 RESPONSIBILITIES

A. Contractor: Responsibilities of the Contractor as related to the Commissioning Process include, but are not limited to the following:

1. Facilitate coordination of Commissioning work by Commissioning authority.
2. Attend Commissioning meetings or other meetings called by Commissioning authority to facilitate the Commissioning Process.
3. Review Functional Performance Test procedures for feasibility, safety, and impact on warranty, and provide Commissioning authority with written comment on same.
4. Provide all documentation relating to manufacturer's recommended performance testing of equipment and systems.
5. Provide Operations & Maintenance data to Commissioning authority for preparation of checklists and training manuals.
6. Provide Testing and Balancing Report before Functional Testing begins.
7. Provide As-built drawings and documentation to facilitate Testing.
8. Assure and facilitate participation and cooperation of Sub Contractors and equipment suppliers as required for the Commissioning Process.
9. Certify to Commissioning authority that installation work listed in Pre-Functional Checklists has been completed.
10. Install systems and equipment in strict conformance with project specifications, manufacturer's recommended installation procedures, and Pre-Functional Checklists.
11. Provide data concerning performance, installation, and start-up of systems.
12. Provide copy of manufacturers filled-out start-up forms for equipment and systems.

13. Ensure systems have been started and fully checked for proper operation prior to arranging for Testing with Commissioning authority. Prepare and submit to Commissioning authority written certification that each piece of equipment and/or system has been started according to manufacturer's recommended procedure, and that system has been tested for compliance with operational requirements.
    a. Contractor shall carry out manufacturer's recommended start-up and testing procedures, regardless of whether or not they are specifically listed in Pre-Functional Checklists.
    b. Contractor is not relieved of obligation for systems/equipment demonstration where performance testing is required by specifications, but a Functional Performance Test is not specifically designated by Commissioning authority.
14. Coordinate with Commissioning authority to determine mutually acceptable date of Functional Performance Tests.
15. Provide qualified personnel to assist and participate in Commissioning.
16. Provide test instruments and communications devices, as prescribed by Commissioning authority, required for carrying out Testing of systems.
17. Proprietary test equipment required by the manufacturer, whether specified or not, shall be provided by the manufacturer of the equipment. Manufacturer shall provide the test equipment, demonstrate its use, and assist the Test Engineer in the commissioning process. Proprietary test equipment shall become the property of the Owner upon completion of commissioning.
18. Ensure deficiencies found in the Commissioning Issues Log are corrected within the time schedule shown in the Commissioning Plan.
19. Provide Commissioning authority with all submittals, start-up instructions manuals, operating parameters, and other pertinent information related to Commissioning Process. This information shall be routed through Architect.
20. Prepare and submit to Commissioning authority proposed Training Program outline for each system.
21. Coordinate and provide training of Owner's personnel.
22. Prepare Operation & Maintenance Manuals and As-Built drawings in accordance with specifications; submit copy to Commissioning authority in addition to other contractually required submissions. Revise and resubmit manuals in accordance with Design Professionals and Commissioning authority comments.
23. Commissioning requires participation of this Division Subcontractors to ensure that systems are operating in manner consistent with Contract Documents. All costs associated with the participation of Contractor, Sub-Contractors, Design Professionals, and Equipment Vendors in the Commissioning Process shall be included as part of the Construction Contract.

B. Subcontractors and vendors shall prepare and submit to Commissioning authority proposed Startup procedures to demonstrate proper installation of systems, according to these specifications and checklists prepared by Commissioning authority

1.4 COMMISSIONING PLAN

A. Commissioning Process tasks and activities:

1. Commissioning kick-off meeting: Conducted by commissioning authority and attended by construction team and design team.
2. Pre-functional checklists: Prepared by the commissioning authority and filled out by subcontractors performing the work that is applicable.
3. Site visits to review installation of applicable systems and progress of checklist documentation performed and reported by commissioning authority.
4. Functional testing: Commissioning authority shall conduct functional testing with assistance of applicable subcontractors and document successful results as well

as deficiencies (issues). Functional performance testing shall demonstrate the installation and operation of components, systems, and system-to-system interfacing in accordance with plans and specifications. Testing shall include all modes and sequence of operation, including under full-load, part-load and emergency conditions (including all alarms). Controls system shall be tested to document that control devices, components, equipment and systems are calibrated and adjusted and operate in accordance with the plans and specifications. Sequences shall be functionally tested to document they operate in accordance with plans and specifications.

5. Preliminary commissioning report: Commissioning authority shall issue a preliminary commissioning report to the owner that has results of the first round of functional testing including deficiencies discovered.
6. Air and hydronic system balancing: Air and water flow rates shall be measured and adjusted to deliver final flow rates within the tolerances provided in the contract documents. System balancing shall be performed by T.A.B. contractor as specified in the Testing, Adjusting and Balancing specification section 23 05 93.
7. Systems manual: Commissioning authority shall compile the systems manual using submittal data provided by the general contractor and applicable subcontractors.
8. Final commissioning report: Commissioning authority shall issue final commissioning report documenting the entire process and final results of functional testing. Report shall include final testing and balancing report.

B. Equipment to be tested

1. Energy Management and Control System:
    1. Graphical User Interface
    2. Automation Software
    3. Field Level Controllers
    4. Field Level Devices
    5. Control Sequences
2. Heating Systems
3. Ventilation Fans
4. Air Handling Systems (All AHU, FCU)
5. Energy Recovery Systems (100%)
6. Water Treatment Systems (Verify vendors completion of scope)
7. Service water heating systems (100%)

C. Testing functions and conditions

1. Energy conservation programs (economizer, optimal start, etc)
2. Verify shutdown of systems when scheduled.
3. Calibration of sensors
4. Testing shall affirm winter and summer design conditions.
5. Test under full outside air conditions.
6. Confirm functionality of all specified sequences of operations.
7. Verify the functionality of all alarms.

D. Performance criteria

1. Air and water temperatures shall be within tolerances specified in the contract documents.
2. Space temperatures shall be maintained within 1 degree of specified set points.
3. Space humidity shall be maintained within 5% of specified levels.

PART 2 – PRODUCTS

2.1 NO PRODUCTS SUPPLIED

PART 3 – EXECUTION

3.1 GENERAL

A. This Division has startup responsibilities and are required to complete sub-systems so COMPLETE SYSTEMS are fully functional. Insuring they meet design requirements of Contract Documents. Commissioning procedures and testing do not relieve or lessen this responsibility or shift this responsibility, in whole or in part, to Commissioning Agent or Owner.

B. Coordinate with other Sub-Contractors and equipment vendors to set aside adequate time to address Pre-Functional Checklists, Functional Performance Tests, Operations & Maintenance Manual creation, Owner Training, and associated coordination meetings.

C. Commissioning authority will also conduct site inspections at critical times and issue Cx Field Reports with observations on installation deficiencies so that they may be issued by Architect as deemed appropriate.

3.2 WORK PRIOR TO COMMSSIONING

A. Complete all phases of the work so the systems can be started, adjusted, balanced, tested, and otherwise tested.

B. See pertinent specification sections in this Division, which outline responsibilities for start-up of equipment with obligations to complete systems, including all sub-systems so that they are fully functional.

C. Assist commissioning authority with all information pertaining to actual equipment and installation as required complete the full commissioning scope.

D. Contractor shall prepare startup procedures to demonstrate compliance with pre-functional checklists, and coordinate scheduling for completion of these checklists.

E. A minimum of 7 days prior to date of system startup, submit to Commissioning authority for review, detailed description of equipment start-up procedures which contractor proposes to perform to demonstrate conformance of systems to specifications and Checklists.

3.3 PARTICIPATION IN COMMISSIONING

A. Attend meetings related to the Commissioning Process; arrange for attendance by personnel and vendors directly involved in the project, prior to testing of their systems.

B. Provide skilled technicians to startup and test all systems, and place systems in complete and fully functioning service in accordance with Contract Documents.

C. Provide skilled technicians, experienced and familiar with systems being commissioned, to assist Commissioning authority in commissioning process.

3.4 WORK TO RESOLVE DEFICIENCIES

A. Complete corrective work in a timely manner to allow expeditious completion of Commissioning Process. If deadlines pass without resolution of identified problems, Owner reserves the right to obtain supplementary services and/or equipment to resolve the problem. Costs thus incurred will be Contractor's responsibility.

3.5 PRE-FUNCTIONAL CHECKLISTS (PFC)

A. Contractor shall complete Pre-Functional Checklists to validate compliance with Contract Documents installation and start-up requirements, for this Division's systems.

B. Refer to commissioning plan for detailed list of equipment to be commissioned.

3.6 FUNCTIONAL PERFORMANCE TESTING (FPT)

A. Contractor, in cooperation with Commissioning Agent, shall conduct Functional Performance Testing to validate compliance with Contract Documents.

B. Refer to commissioning plan for detailed list of equipment to be commissioned.

C. Assist Commissioning authority in Functional Testing by removing equipment covers, opening access panels, etc. Furnish ladders, flashlights, meters, gauges, or other inspection equipment as necessary.

3.7 TRAINING

A. The following requirements are in addition to Operations & Maintenance requirements specified elsewhere in this specifications manual.

B. Contractor shall be responsible for training coordination and scheduling, and ultimately to ensure that training is completed.

C. The training agenda (plan) shall include, at a minimum, the following elements:

1. Purpose of equipment.
2. Principle of how the equipment works.
3. Important parts and assemblies.
4. How the equipment achieves its purpose and necessary operating conditions.
5. Most likely failure modes, causes and corrections.
6. On site demonstration.

D. Commissioning authority shall be responsible for overseeing and approving content and adequacy of training of Owner personnel for all installed systems. Provide Commissioning authority with training plan two weeks before planned training.

3.8 OPERATIONS & MAINTENANCE MANUALS

A. The following requirements are in addition to Operations & Maintenance requirements specified elsewhere in this specifications manual.

B. Sub-Contractor shall compile and prepare documentation for equipment and systems specified in this Division, and shall deliver documentation to Contractor for inclusion in Operation & Maintenance Manuals, in accordance with requirements of Division 01, prior to training Owner personnel.

C. Provide Commissioning authority with a single, electronic copy of Operation & Maintenance

Manuals for review. Commissioning authority copy of O&M manuals shall be submitted through Architect.

D. Operation and maintenance manuals shall include, service agency contact information, maintenance requirements, controls system settings and a narrative of how each system is intended to operate, including set points.

3.9 DOCUMENTATION

A. Commissioning authority shall provide documentation of process as follows:

1. Preliminary commissioning report including test procedures, results of testing, itemization of deficiencies, deferred tests and climatic conditions required for performance of deferred tests. Preliminary commissioning report shall be issued to owner to demonstrate the first pass of testing has occurred and to demonstrate compliance with applicable codes.

2. Final commissioning report shall include the final test and balance report, final results of functional testing, disposition of deficiencies discovered during testing, including the details of corrective measures used and functional testing procedures used for repeatability of testing in the future.

END OF SECTION

SECTION 23 21 13 – ABOVE GROUND HYDRONIC PIPING

PART 1 - GENERAL

1.1 GENERAL REQUIREMENTS

A. The requirements of the General Conditions and Supplementary Conditions apply to all work herein.

B. Section 23 02 00 - Basic Materials and Methods is included as a part of this Section as though written in full in this document.

1.2 WORK INCLUDED

A. Pipe and pipe fittings.

B. Valves.

C. Condensate drain piping.

1.3 RELATED WORK

A. Section 23 05 16 – Expansion Fittings and Loops for HVAC Piping.

B. Section 23 05 29 – Hangers and Supports for Piping and Equipment HVAC.

C. Section 23 05 48 – Vibration and Seismic Controls for HVAC Piping and Equipment.

D. Section 23 05 53 – Identification for HVAC Piping and Equipment.

E. Section 23 07 19 – HVAC Piping Insulation.

F. Section 23 21 19 – Hydronic Specialties.

1.4 REFERENCES

A. ANSI/ASME Sec 9 - Welding and Brazing Qualifications.

B. ANSI/ASME B16.3 - Malleable Iron Threaded Fittings Class 150 and 300.

C. ANSI/ASME B31.9 - Building Services Piping.

D. ANSI/AWS A5.8 - Brazing Filler Metal.

E. ANSI/AWWA C110 - Ductile-Iron and Gray-Iron Fittings 3 in. through 48 in., for Water and Other Liquids.

F. ASTM A53 - Pipe, Steel, Black and Hot-Dipped, Zinc Coated, Welded and Seamless.

G. ASTM A106 - Seamless Carbon Steel Pipe for High-Temperature Service

H. ASTM A123 - Zinc (Hot-Dip Galvanized) Coatings on Iron and Steel Products.

I. ASTM B32 - Solder Metal.

J. ASTM B88 - Seamless Copper Water Tube.

1.5 QUALITY ASSURANCE

A. Foreign made pipes, valves and fittings will not be acceptable.

B. Valves: Manufacturer's name and pressure rating marked on valve body.

C. Welding Materials and Procedures: Conform to ANSI/ASME SEC 9. and applicable state labor regulations.

D. Welder's Certification: In accordance with ANSI/ASME SEC 9.

1.6 SUBMITTALS

A. Submit product data under provisions of Division One.

B. Include data on pipe materials, pipe fittings, valves, and accessories.

C. Include welder's certification of compliance with ANSI/ASME SEC 9.

1.7 DELIVERY, STORAGE, AND HANDLING

A. Deliver products to site under provisions of Division One.

B. Store and protect products under provisions of Division One.

C. Deliver and store valves in shipping containers with labeling in place.

D. Provide temporary end caps and closures on piping and fittings. Maintain in place until installation.

E. Protect piping systems from entry of foreign materials by temporary covers, proper storage and dunnage, completing sections of the work, and isolating parts of completed system. Tape will not be allowed as an acceptable end cover.

PART 2 - PRODUCTS

2.1 EQUIPMENT DRAINS AND OVERFLOWS

A. Steel Pipe: ASTM A53, Schedule 40 galvanized.

1. Fittings: Galvanized cast iron, or ANSI/ASTM B16.3 malleable iron.
2. Joints: Screwed, or grooved mechanical couplings.

2.2 FLANGES, UNIONS, AND COUPLINGS

A. Pipe Size 2 Inches and Under: 150 psig malleable iron unions for threaded ferrous piping; bronze unions for copper pipe, soldered joints.

B. Pipe Size Over 2 Inches: 150 psig forged steel slip-on flanges for ferrous piping; bronze flanges for copper piping; 1/16 inch thick preformed neoprene bonded gasket.

C. Grooved mechanical pipe couplings, fittings, valves and other grooved components may be used as an option to welding, threading or flanged methods. All grooved components

shall be of one manufacturer, and conform to local code approval and/or is listed by ANSI-B-31.1, B-31.3, B-31.9, ASME, UL/ULC. FM, IAPMO or BOCA. Grooved end manufacturer to be ISO-9001 certified. Grooved couplings shall meet the requirements of ASTM F-1476. Manufacturer shall be Victaulic or approved equal. Can be utilized only in mechanical rooms or cooling tower areas.

2.3 ACCEPTABLE MANUFACTURERS - GATE VALVES

A. Milwaukee.

B. Crane.

C. Dezurik.

D. Nibco.

E. Substitutions: Under provisions of Division One.

2.4 GATE VALVES

A. Up to 2 Inches: Bronze body, bronze trim, rising stem, handwheel, inside screw, single wedge or disc, threaded ends.

B. Over 2 Inches: Iron body, bronze trim, rising stem, handwheel, OS&Y, single wedge, flanged ends.

2.5 ACCEPTABLE MANUFACTURERS - GLOBE VALVES

A. Milwaukee.

B. Nibco.

C. Stockham.

D. Dezurik.

2.6 GLOBE VALVES

A. Up to 2 Inches: Bronze body, bronze trim, rising stem and handwheel, inside screw, renewable stainless steel disc, screwed ends, with back seating capacity.

B. Over 2 Inches: Iron body, bronze trim, rising stem, hand wheel, OS&Y, plug-type disc, flanged ends, renewable seat and disc.

2.7 ACCEPTABLE MANUFACTURERS - BALL VALVES

A. Milwaukee.

B. Nibco.

C. Jamesbury.

D. Dezurik.

E. Kitz.

F. Victaulic (For grooved systems only)

2.8 BALL VALVES

A. Up to 2 Inches: Bronze two-piece body, 600 PSI full port, stainless steel ball and stem, teflon seats and stuffing box ring, lever handle, and balancing stops, threaded ends.

B. Over 2 Inches: Cast steel body, chrome plated steel ball, teflon seat and stuffing box seals, lever handle, or gear drive hand wheel for sizes 10 inches (250 mm) and over, flanged.

C. Ball valves installed in insulated lines shall have stem extensions compatible with up to 2" of insulation. Extensions shall be non-metallic equal to Nibco "nib-seal".

2.9 ACCEPTABLE MANUFACTURERS - PLUG COCKS

A. Nibco.

B. Jenkins.

C. Dezurik.

D. Milwaukee.

2.10 PLUG COCKS

A. Up to 2 Inches: Bronze body, bronze tapered plug, non-lubricated, teflon packing, threaded ends, with one wrench operator for every ten plug cocks.

B. Over 2 Inches: Cast iron body and plug, pressure lubricated, teflon packing, flanged ends, with wrench operator with set screw.

2.11 ACCEPTABLE MANUFACTURERS - BUTTERFLY VALVES

A. Milwaukee.

B. Nibco.

C. WECO.

D. Dezurik.

E. Victaulic (For grooved systems only)

F. Substitutions: Under provisions of Division One.

2.12 BUTTERFLY VALVES

A. Iron body, aluminum bronze disc, resilient replaceable seat for service to 180 degrees F lug or grooved ends, extended neck, infinite position lever handle with memory stop. Valve shall be rated at full working pressure with downstream flange removed in either direction.

2.13 ACCEPTABLE MANUFACTURERS - SWING CHECK VALVES

A. Milwaukee.

B. Nibco.

C. Stockham.

D. Dezurik.

E. Victaulic (For grooved systems only)

F. Substitutions: Under provisions of Division One.

2.14 SWING CHECK VALVES

A. Up to 2 Inches: Bronze 45 degree swing disc, screwed ends.

B. Over 2 Inches Iron body, bronze trim, 45 degree swing disc, renewable disc and seat, flanged or grooved ends.

2.15 ACCEPTABLE MANUFACTURERS - SPRING LOADED CHECK VALVES

A. Milwaukee.

B. Nibco.

C. Mueller.

D. Dezurik.

E. Victaulic (For grooved systems only)

F. Substitutions: Under provisions of Division One.

2.16 SPRING LOADED CHECK VALVES

A. Iron body, bronze trim, stainless steel spring, aluminum bronze disc, screwed, grooved, wafer or flanged ends.

2.17 ACCEPTABLE MANUFACTURERS - RELIEF VALVES

A. Nibco.

B. Jenkins.

C. Dezurik.

D. Milwaukee.

E. Substitutions: Under provisions of Division One.

2.18 RELIEF VALVES

A. Bronze body, teflon seat, stainless steel stem and springs, automatic, direct pressure actuated, capacities ASME certified and labeled.

PART 3 - EXECUTION

3.1 PREPARATION

A. Ream pipe and tube ends. Remove burrs. Bevel plain end ferrous pipe.

B. Remove scale and dirt on inside and outside before assembly.

C. Prepare piping connections to equipment with flanges or unions.

D. After completion, fill, clean, and treat systems.

E. Provide extended necks for all vents, thermometer wells, pressure gauge wells, pet cocks and pete's plugs.

3.2 INSTALLATION

A. Route piping in orderly manner, plumb and parallel to building structure, and maintain gradient.

B. Install piping to conserve building space, and not interfere with use of space and other work.

C. Group piping whenever practical at common elevations.

D. Install piping to allow for expansion and contraction without stressing pipe, joints, or connected equipment. Refer to Section 23 05 16.

E. Provide clearance for installation of insulation, and access to valves and fittings.

F. Provide access where valves and fittings are not exposed. Coordinate size and location of access doors with Division 8.

G. Slope piping and arrange systems to drain at low points. Use eccentric reducers to maintain top of pipe level.

H. Where pipe support members are welded to structural building framing, scrape, brush clean, and apply one coat of zinc rich primer to welds.

I. Prepare pipe, fittings, supports, and accessories for finish painting. Refer to Division 9.

J. Install valves with stems upright or horizontal, not inverted.

K. All grooved components (couplings, fittings, valves, gaskets, and specialties) shall be of one manufacturer.

L. Grooved manufacturer shall provide on-site training for contractor's field personnel by a factory trained representative in the proper use of grooving tools, application of groove, and the product installation. Factory trained representative shall periodically visit the job site and inspect installation. Contractor shall remove and replace any improperly installed products.

3.3 APPLICATION

A. Install unions downstream of valves, and at equipment or apparatus connections.

B. Install brass male adapters each side of valves in copper piped system. Sweat solder adapters to pipe.

C. Install ball valves for shut-off and to isolate equipment, part of systems, or vertical risers.

D. Install plug valves for throttling, bypass, or manual flow control services.

E. Use plug cocks for throttling service. Use non-lubricated plug cocks only when shut-off or isolating valves are also provided.

F. Use lug end butterfly valves to isolate equipment.

G. Provide 3/4-inch ball (drain) valves equal to Nibco T-585-70-HC at main shut-off valves, low points of piping, bases of vertical risers, and at equipment and pipe to nearest drain.

H. Provide automatic air vents at all high points and air pockets in the system.

3.4 CONDENSATE DRAIN PIPING

A. Drain piping from each unit shall be extended to the nearest floor drain or condensate drainage system. Drains shall be of the size indicated but not less than the full size of the drain pan connections.

B. Use plugged tees in lieu of elbows.

C. Pipe shall be Schedule 40 galvanized with malleable iron screwed or type "L" copper fittings.

D. Slope all drain lines 1/8" per foot, minimum.

E. Provide auxiliary drain pan on all AHU's above ceiling with auxiliary drain line routed to discharge in visually prominent area. Discharge location shall be coordinated with Architect.

3.5 PIPE FABRICATION AND INSTALLATION

A. All pipes shall be cut accurately to measurements established at the site and shall be worked into place without springing or forcing.

B. Piping layout and installation shall be made in the most advantageous manner possible with respect to headroom, valve access, opening and equipment clearance, and clearance from other work. Particular attention shall be given to piping in the vicinity of equipment; layout shall be made in such manner as to preserve maximum access to the various equipment parts for maintenance.

C. All changes in directions shall be made with fittings; field bending and mitering of pipe is prohibited.

D. Air vents and air chambers shall be installed as hereinafter specified.

3.6 OFFSETS AND FITTINGS

A. Due to the small scale of the Drawings, it is not possible to indicate all offsets, fittings, etc. which may be required. The Contractor shall carefully investigate structural and

finish conditions affecting the Work, and shall take such steps as may be required to meet such conditions at no additional cost to the Owner.

B. All piping shall be installed close to walls, ceilings and columns, (consistent with the proper space for covering, removal of pipe and special clearances), so as to occupy the minimum of space, and all offsets, fittings, etc., required shall be provided at no additional cost to the Owner.

3.7 SECURING AND SUPPORTING

A. All piping shall be adequately supported to line and grade, with due provisions for expansion and contraction.

B. Piping shall be supported on approved clevis type, split ring, or trapeze type hangers properly connected to the structural members of the building.

C. All insulated piping shall be fitted with suitable steel protection saddles.

D. Perforated bar hangers, straps, wire or chains will not be permitted.

3.8 ISOLATION VALVES

A. All piping systems shall be provided with line size shut-off valves located at risers, at branch connections to mains, and at other locations as indicated and required.

3.9 TESTING OF PIPING SYSTEMS

A. During the progress of the Work and upon completion, tests shall be made as specified herein and as required by Authorities Having Jurisdiction, including Inspectors, Owner or Engineer. The Engineer or duly authorized Construction Inspector shall be notified in writing at least 2 working days prior to each test or other Specification requirement which requires action on the part of the Construction Inspector.

B. Tests shall be conducted as part of this Work and shall include all necessary instruments, equipment, apparatus, and service as required to perform the tests with qualified personnel. Submit proposed test procedures, recording forms, and test equipment for approval prior to the execution of testing.

C. Tests shall be performed before piping of various systems have been covered or furred-in. For insulated piping systems, testing shall be accomplished prior to the application of any insulation.

D. All piping systems shall be tested and proved absolutely tight for a period of not less than 2 hours at a pressure of 150 psi(g) or 150% of design pressure, whichever is greater. Tests shall be witnessed by the Engineer or an authorized representative and pronounced satisfactory before pressure is removed or any water drawn off.

E. Leaks, damage or defects discovered or resulting from test shall be repaired or replaced to a like new condition. Leaking pipe joints, or defective pipe, shall be removed and replaced with acceptable materials. Test shall be repeated after repairs are completed and shall continue until such time as the entire test period expires without the discovery of any leaks, damage, or defects.

F. Wherever conditions permit, each piping system shall thereafter be subjected to its normal operating pressure and temperature for a period of no less than five 5 days.

During that period, it shall be kept under the most careful observation. The piping systems must demonstrate the propriety of their installation by remaining absolutely tight during this period.

END OF SECTION

SECTION 23 23 00 - REFRIGERANT PIPING

PART 1 - GENERAL

1.1 GENERAL REQUIREMENTS

A. The requirements of the General Conditions and Supplementary Conditions apply to all work herein.

B. Section 23 02 00 – Basic Materials and Methods is included as a part of this Section as though written in full in this document.

1.2 SCOPE

Scope of the Work shall include the furnishing and complete installation of the equipment covered by this Section, with all auxiliaries, ready for Owner's use.

1.3 REFERENCES

A. ANSI/AHRI 710 – Performance Rating of Liquid Line Driers.

B. ANSI/AHRI 730 – Flow Capacity Rating of Suction Line Filters and Suction Line Filter Driers.

C. ANSI/AWS A5.8 – Specification for Filler Metals for Brazing and Braze Welding.

D. ANSI/AWS B2.2 - Standard for Brazing Procedure and Performance Qualification.

E. ASHRAE 15 – Safety Code for Refrigeration Systems.

F. ASME B16.22 - Wrought Copper and Copper Alloy Solder-Joint Pressure Fittings.

G. ASME Section IX – Welding and Brazing Qualifications.

H. ASME B31.5 - Refrigeration Piping and Heat Transfer Components.

I. ASME B31.9 – Building Services Piping.

J. ASTM B280 – Standard Specification for Seamless Copper Tube for Air Conditioning and Refrigeration Field Service.

PART 2 - PRODUCTS

2.1 GENERAL

Provide for the systems as shown. Submit shop drawings of piping systems showing all traps, pipe sizes, and accessories; drawing to be marked "Approved" and signed by a representative of the Application Engineering Department of the condensing unit manufacturer. Pipe sizes shall be as recommended by unit manufacturer. Refer to piping schematic on Drawings.

2.2 MATERIAL

A. PIPE: Type ACR copper tubing, hard-drawn, per ASTM B280.

B. FITTINGS: Wrought copper per ASME B16.22

C. JOINTS: Brazed joints with Sil-Fos filler metal per ANSI/AWS A5.8.

2.3 ACCESSORIES

All accessories shall be UL listed and rated in accordance with AHRI Standard 710.

A. On systems 7-1/2 tons and larger, each separate refrigerant circuit shall have a separate filter drier. Each filter drier shall have a replaceable core and a three valve bypass. The filter drier shall be full line size and installed in the refrigerant liquid line. The filter shall have a minimum 4-3/4 inches diameter shell with removable flange and gasket. Flange shall be tapped for 1/4 inch FPT access valve. Size filter-drier for maximum 2.0 psi pressure drop at evaporator operating temperature. Similar to Mueller Brass Company model Drymaster micro-guard refillable filter series SD-485 through SD19217 or Sporlan catch-all.

B. On systems less than 7-1/2 tons, the filter drier shall be the sealed type; sizes as above. One drier per refrigerant circuit.

C. Liquid-Moisture Indicator shall be installed in liquid refrigerant line; full line size similar to Mueller Brass Company model "Vuemaster".

D. Thermostatic expansion valve shall have adjustable super heat and be as manufactured by Sporlan.

2.4 EVACUATION

Evacuate moisture completely by applying a commercial vacuum pump for a minimum of 24 hours. Moisture indicator shall indicate a completely moisture-free condition at time of final inspection. The vacuum pump shall run until the system indicates a maximum of 35 degrees FDB. The system shall be flushed with the operating refrigerant and the vacuum pump connected and rerun to repeat the evacuation. Evaluation shall be performed under supervision of the Engineer.

2.5 REFRIGERANT AND OIL

A. Contractor shall leave the refrigeration system with a full charge of refrigerant and oil and shall be responsible for the maintenance of a full charge of refrigerant and oil in the systems for a period of one year from date of Substantial Completion.

B. Should any leaks in the refrigeration system occur during the guarantee period, the Contractor shall eliminate such leaks and recharge system to a full charge of refrigerant and oil at no cost to the Owner.

PART 3 - EXECUTION

3.1 All equipment and piping shall be installed in accordance with the manufacturer's recommendations and printed installation instructions.

3.2 All items required for a complete and proper installation are not necessarily indicated on the Drawings or in the Specifications. Provide all items required as per manufacturer's requirements.

END OF SECTION

SECTION 23 31 13 - METAL DUCTWORK

PART 1 - GENERAL

1.1 WORK INCLUDED

A. Low pressure ductwork.

B. Medium and high pressure ductwork.

C. Casings.

D. Kitchen hood ductwork.

E. Duct cleaning.

1.2 RELATED SECTIONS

Division 9 - Finishes: Weld priming, weather resistant, paint or coating.

A. Section 23 02 00 - Basic Material and Methods.

B. Section 23 05 29 – Hangers and Support for Piping and Equipment HVAC.

C. Section 23 05 93 - Testing, Adjusting and Balancing.

D. Section 23 07 13 - Duct Insulation.

E. Section 23 33 00 - Ductwork Accessories.

F. Section 23 37 13 - Air Distribution Devices.

1.3 QUALITY ASSURANCE

A. Manufacturer's Qualifications: Firms regularly engaged in manufacture of metal ductwork products of types, materials and sizes required, whose products have been in satisfactory use in similar service for not less than 5 years.

B. Installer's Qualifications: Firms with least 3 years of successful installation experience on projects with metal ductwork systems similar to that required for project.

C. Codes and Standards:

1. SMACNA Standards: Comply with latest SMACNA's "HVAC Duct Construction Standards, Metal and Flexible" for fabrication and installation of metal ductwork.
2. ASHRAE90.1 Standards: Comply with ASHRAE Handbook, Equipment Volume, Chapter 1 "Duct Construction", for fabrication and installation of metal ductwork.
3. NFPA Compliance: Comply with NFPA 90A "Standard for the Installation of Air Conditioning and Ventilating Systems", NFPA 90B "Standard for the Installation of Warm Air Heating and Air Conditioning Systems", and NFPA 96 Standard.
4. IECC 2015: Comply with 2015 International Energy Conservation Code.

1.4 GENERAL DESCRIPTION

A. Extent of metal ductwork is indicated on drawings and in schedules, and by requirements of this section.

1.5 SUBMITTALS

A. Submit shop drawings, duct fabrication standards and product data under provisions of Division One.

B. Indicate duct fittings, particulars such as gauges, sizes, welds, and configuration prior to start of work.

C. The contract documents are schematic in nature and are to be used only for design intent. The contractor shall prepare sheet metal shop drawings, fully detailed and drawn to scale, indicating all structural conditions, all plumbing pipe and light fixture coordination, and all offsets and transitions as required to permit the duct to fit in the space allocated and built. All duct revisions required as a result of the contractor not preparing fully detailed shop drawings will be performed at no additional cost.

1.6 DEFINITIONS

A. Duct Sizes: Inside clear dimensions. For lined ducts, maintain indicated clear size inside lining. Where offsets or transitions are required, the duct shall be the equivalent size based on constant friction rate.

B. Low Pressure: Low pressure ductwork shall be rated for an operating pressure of 2”. Low pressure ductwork shall be defined as all return, exhaust, and outside air ducts, all supply ductwork associated with constant volume air handling units with a scheduled external static pressure of less than 2”, and all supply ductwork downstream of terminal units in variable volume systems.

C. Medium Pressure: Medium pressure ductwork shall be rated for an operating pressure of 4”. Medium pressure ductwork shall be defined as all supply ductwork extending from variable volume air handling units to terminal units in variable volume systems with air handling units having a scheduled external static pressure of less than 4”. The supply ductwork of constant volume air handling units having a scheduled external static pressure greater than 2” and less than 4” shall be rated for medium pressure.

D. High Pressure: High pressure ductwork shall be rated for an operating pressure of 6”, or the scheduled external pressure of the equipment it is connected to, whichever is greater. The supply ductwork of air handling units having a scheduled external static pressure greater than 4” shall be high pressure.

1.7 DELIVERY, STORAGE, AND HANDLING

A. Protection: Protect shop-fabricated and factory-fabricated ductwork, accessories and purchased products from damage during shipping, storage and handling. Prevent end damage and prevent dirt and moisture from entering ducts and fittings, use sheet metal end caps on any lined duct exposed to the weather.

B. Storage: Where possible, store ductwork inside and protect from weather. Where necessary to store outside, store above grade and enclose with waterproof wrapping.

PART 2 - PRODUCTS

2.1 DUCTWORK MATERIALS

A. Exposed Ductwork Materials: Where ductwork is indicated to be exposed to view in occupied spaces, provide materials which are free from visual imperfections including

pitting, seam marks, roller marks, stains and discolorations, and other imperfections, including those which would impair painting.

B. Sheet Metal.: Except as otherwise indicated, fabricate ductwork from galvanized sheet steel complying with ASTM A 527, lockforming quality, with G 90 zinc coating in accordance with ASTM A 525; and mill phosphatized for exposed locations.

C. Stainless Steel Sheet: Where indicated, provide stainless steel complying with ASTM A167; Type 316; with No. 4 finish where exposed to view in occupied spaces, No. 1 finish elsewhere. Protect finished surfaces with mill-applied adhesive protective paper, maintained through fabrication and installation.

D. Aluminum Sheet: Where indicated, provide aluminum sheet complying with ASTM B 209, Alloy 3003, Temper H14.

2.2 MISCELLANEOUS DUCTWORK MATERIALS

A. General: Non-combustible and conforming to UL 181, Class 1 air duct materials.

B. Flexible Ducts: Flexmaster U.S.A., Inc. Type 3M or approved equal, corrosive resistant galvanized steel formed and mechanically locked to inner fabric with 1” thick insulation when flexible ducts are located in conditioned spaces and with R-5 insulation when located in unconditioned spaces. Flexible duct shall have reinforced metalized outer jacket comply with UL 181, Class 1 air duct.

C. Sealants: Hard-Cast “iron grip” or approved equal, non-hardening, water resistant, fire resistive and shall not be a solvent curing product. Sealants shall be compatible with mating materials, liquid used alone or with tape or heavy mastic.

D. Ductwork Support Materials: Except as otherwise indicated, provide hot-dipped galvanized steel fasteners, anchors, rods, straps, trim and angles for support of ductwork.

1. For exposed stainless steel ductwork, provide matching stainless steel support materials.
2. For aluminum ductwork, provide aluminum support materials.

2.3 LOW PRESSURE DUCTWORK

A. Fabricate and support in accordance with latest SMACNA Duct Construction Standards and ASHRAE handbooks, except as indicated. Provide duct material, gauges, reinforcing, and sealing for operating pressures indicated.

B. Size round ducts installed in place of rectangular ducts in accordance with ASHRAE table of equivalent rectangular and round ducts. No variation of duct configuration or sizes permitted except by approved shop drawings. Obtain engineer’s approval prior to using round duct in lieu of rectangular duct.

C. Construct T's, bends, and elbows with radius of not less than 1-1/2 times width of duct on centerline. Where not possible and where rectangular elbows are used, provide airfoil-turning vanes. Where acoustical lining is indicated, provide turning vanes of perforated metal with glass fiber insulation.

D. Increase duct sizes gradually, not exceeding 15 degrees divergence wherever possible. Divergence upstream of equipment shall not exceed 30 degrees; convergence downstream shall not exceed 45 degrees.

E. Use crimp joints with bead for joining round duct sizes 6 inch smaller with crimp in direction of airflow.

F. Use double nuts and lock washers on threaded rod supports.

2.4 MEDIUM AND HIGH PRESSURE DUCTS

A. Fabricate and support in accordance with SMACNA Duct Construction Standards and ASHRAE handbooks, except as indicated. Provide duct material, gauges, reinforcing, and sealing for operating pressures indicated.

B. Construct T's, bends, and elbows with radius of not less than 1½ times width of duct on centerline. Where not possible and where rectangular elbows are used, provide airfoil-turning vanes. Where acoustical lining is required, provide turning vanes of perforated metal with glass fiber insulation. Weld in place.

C. Transform duct sizes gradually, not exceeding 15 degrees divergence and 30 degrees convergence.

D. Fabricate continuously welded medium and high pressure round and oval duct fittings two gauges heavier than duct gauges indicated in SMACNA Standard. Joints shall be minimum 4 inch cemented slip joint, brazed or electric welded. Prime coat welded joints.

E. Provide standard 45 degree lateral wye takeoffs unless otherwise indicated where 90 degree conical tee connections may be used.

2.5 CASINGS

A. Fabricate casings in accordance with SMACNA Duct Construction Standards and SMACNA High Pressure Duct Construction Standards and construct for operating pressures indicated.

B. Mount floor mounted casings on 4 inch high concrete curbs. At floor, rivet panels on 8 inch centers to angles. Where floors are acoustically insulated, provide liner of 18 gauge galvanized expanded metal mesh supported at 12 inch centers, turned up 12 inches at sides with sheet metal shields.

C. Reinforce doorframes with steel angles tied to horizontal and vertical plenum supporting angles. Install hinged access doors where indicated or required for access to equipment for cleaning and inspection. Provide clear wire glass observation ports, minimum 6 X 6 inch size.

D. Fabricate acoustic casings with reinforcing turned inward. Provide 16 gauge back facing and 22 gauge perforated front facing with 3/32 inch diameter holes on 5/32 inch centers. Construct panels 3 inches thick packed with 4.5 lb./cubic foot minimum glass fiber media, on inverted channels of 16 gauge.

2.6 KITCHEN HOOD EXHAUST DUCTWORK

A. Fabricate in accordance with SMACNA Duct Construction Standards, and NFPA 96.

B. Construct of 16 gauge carbon steel or 18 gauge stainless steel, using continuous external welded joints.

C. Slope all duct toward the kitchen hood or a grease reservoir so that grease cannot collect in any portion of duct per mechanical code.

2.7 DOMESTIC RANGE HOOD EXHAUST DUCTWORK

A. Fabricate in accordance with SMACNA Duct Construction Standards.

B. Construct of minimum 26 gauge galvanized steel.

2.8 DISHWASHER/SHOWER/LOCKER ROOM EXHAUST DUCTWORK

A. All ductwork shall be stainless steel, one gauge heavier than that required for galvanized steel duct.

B. Slope all duct to drain out grilles or provide drain line to floor drain.

PART 3 - EXECUTION

3.1 GENERAL INSTALLATION REQUIREMENTS

A. Obtain manufacturer's inspection and acceptance of fabrication and installation of ductwork at beginning of installation.

B. Provide openings in ductwork where required to accommodate thermometers and controllers. Provide pitot tube openings where required for testing of systems, complete with metal can with spring device or screw to ensure against air leakage. Where openings are provided in insulated ductwork, install insulation material inside a metal ring.

C. Locate ducts with sufficient space around equipment to allow normal operating and maintenance activities.

D. Connect diffusers or troffer boots to low pressure ducts with 6 feet maximum, 4 feet minimum, length of flexible duct. Hold in place with strap or clamp.

E. During construction provide temporary closures of metal or taped polyethylene on open ductwork to prevent construction dust from entering ductwork system.

F. The interior surface of all ductwork shall be smooth. No sheet metal parts, tabs, angles, or anything else may project into the ducts for any reason, except as specified to be so. All seams and joints shall be external.

G. All ductwork located exposed on roof shall be "crowned" to prevent water from ponding. Ref: Insulation for additional requirements.

H. Where ducts pass through floors, provide structural angles for duct support. Where ducts pass through walls in exposed areas, install suitable sheet metal escutcheons as closers.

I. All angles shall be carried around all four sides of the duct or group of ducts. Angles shall overlap corners and be welded or riveted.

J. All ductwork shall be fabricated in a manner to prevent the seams or joints being cut for the installation of grilles, registers, or ceiling outlets.

K. All duct hangers shall be attached to building structure. Cutting slots in roof or floor decking for hanger straps to be cast in concrete is not acceptable.

3.2 INSTALLATION OF FLEXIBLE DUCTS

A. Maximum Length: For any duct run using flexible ductwork, do not exceed 6'-0" extended length.

B. Installation: Install in accordance with Section III of SMACNA's, "HVAC Duct Construction Standards, Metal and Flexible".

3.3 REQUIREMENTS FOR UNIT CASINGS

A. Set plenum doors 6 to 12 inches above floor. Arrange door swings so that fan static pressure holds door in closed position.

3.4 REQUIREMENTS FOR KITCHEN HOOD EXHAUST DUCT

A. Provide residue traps in kitchen hood exhaust ducts at base of vertical risers with provisions for cleanout.

B. Provide access openings in each change in direction, located on sides of duct 1½" minimum from bottom, and fitted with grease-tight covers of same material as duct

C. Use stainless steel for ductwork exposed to view.

3.5 DUCTWORK APPLICATION SCHEDULE

AIR SYSTEM	MATERIAL
Low Pressure Supply	Galvanized Steel, Aluminum
Medium and High Pressure Supply	Galvanized Steel
Return and Relief	Galvanized Steel, Aluminum
General Exhaust	Galvanized Steel, Aluminum
Kitchen Hood Exhaust	Carbon Steel, Stainless Steel
Dishwasher/Shower/Locker Room/ Dryer Vent	Stainless Steel
Outside Air Intake	Steel
Combustion Air	Steel
Emergency Generator Ventilation	Steel

3.6 DUCTWORK HANGERS AND SUPPORTS

A. All ductwork shall be properly suspended or supported from the building structure. Hangers shall be galvanized steel straps or hot-dipped galvanized rod with threads pointed after installation. Strap hanger shall be attached to the bottom of the ductwork, provide a minimum of two screws one at the bottom and one in the side of each strap on metal ductwork. The spacing, size and installation of hangers shall be in accordance with the recommendations of the latest SMACNA edition.

B. All duct risers shall be supported by angles or channels secured to the sides of the ducts at each floor with sheet metal screws or rivets. The floor supports may also be secured to ducts by rods, angles or flat bar to the duct joint or reinforcing. Structural steel supports for duct risers shall be provided under this Division.

3.7 AIR DUCT LEAKAGE: (From SMACNA Duct Standards Latest Edition) Test all ductwork (designed to handle over 1000 CFM) as follows:

A. Test apparatus

The test apparatus shall consist of:

1. A source of high pressure air--a portable rotary blower or a tank type vacuum cleaner.
2. A flow measuring device consisting of straightening vanes and an orifice plate mounted in a straight tube with properly located pressure taps. Each orifice assembly shall be accurately calibrated with its own calibration curve. Pressure and flow readings shall be taken with U-tube manometers.

B. Test Procedures

1. Test for audible leaks as follows:
2. Close off and seal all openings in the duct section to be tested. Connect the test apparatus to the duct by means of a section of flexible duct.
   a. Start the blower with its control damper closed.
   b. Gradually open the inlet damper until the duct pressure reaches 1.5 times the standard designed duct operating pressure.
   c. Survey all joint for audible leaks. Mark each leak and repair after shutting down blower. Do not apply a retest until sealants have set.
3. After all audible leaks have been sealed, the remaining leakage should be measured with the orifice section of the test apparatus as follows:
   a. Start blower and open damper until pressure in duct reaches 50% in excess of designed duct operating pressure.
   b. Read the pressure differential across the orifice on manometer No. 2. If there is no leakage, the pressure differential will be zero.
   c. Total allowable leakage shall not exceed one (1) percent of the total system design air flow rate. When partial sections of the duct system are tested, the summation of the leakage for all sections shall not exceed the total allowable leakage.
   d. Even though a system may pass the measured leakage test, a concentration of leakage at one point may result in a noisy leak which, must be corrected.
4. Testing Report
   a. Contractor shall provide a testing report for each air system to the engineer. The report shall indicate the completion of testing and compliance with testing specification.
   b. All duct testing reports shall be included in the final close out documents.

3.8 DUCT SYSTEM CLEANING

A. Duct system cleaning shall be performed in accordance with the current published standards of ASHRAE and NADCA.

B. Duct system cleaning method used shall incorporate the use of vacuum collection devices that are operated continuously during cleaning. A vacuum device shall be connected to the downstream end of the section being cleaned through a predetermined

opening. The vacuum collection device must be of sufficient power to render all areas being cleaned under negative pressure, such that containment of debris and the protection of the indoor environment is assured.

C. All vacuum devices exhausting air inside the building shall be equipped with HEPA filters (minimum efficiency), including hand-held vacuums and wet-vacuums.

D. All vacuum devices exhausting air outside the facility shall be equipped with Particulate Collection including adequate filtration to contain debris removed from the HVAC system. Such devices shall exhaust in a manner that will not allow contaminants to re-enter the facility. Release of debris outdoors must not violate any outdoor environmental standards, codes or regulations.

E. Fibrous glass thermal or acoustical insulation elements present in any equipment or ductwork shall be thoroughly cleaned with HEPA vacuuming equipment, while the HVAC system is under constant negative pressure, and not permitted to get wet in accordance with applicable NADCA and NAIMA standards and recommendations.

F. Duct cleaning method used shall not damage the integrity of the ductwork, nor damage porous surface materials such as liners inside the ductwork or system components.

G. Replace the fiberglass material if there is any evidence of damage, deterioration, delamination, friable material, mold or fungus growth, or moisture such that fibrous glass materials cannot be restored by cleaning or resurfacing with an acceptable insulation repair coating.

H. Clean external surfaces of foreign substances which might cause corrosive deterioration of metal or, where ductwork is to be painted, might interfere with painting or cause paint deterioration.

I. Strip protective paper from stainless ductwork surfaces, and repair finish wherever it has been damaged.

J. Temporary Closure: At ends of ducts which are not connected to equipment or air distribution devices at time of ductwork installation, provide temporary closure of polyethylene film or other covering which will prevent entrance of dust and debris until time connections are to be completed.

K. Cleaning Report: Contractor shall provide a report to the Owner indicating the completion of duct cleaning per specification and areas of the duct system found to be damaged and/or in need of repair.

3.9 DUCT JOINTS AND SEAMS

A. Seal all non-welded duct joints with duct sealant as indicated.

END OF SECTION

SECTION 23 33 00 – DUCTWORK ACCESSORIES

PART 1 – GENERAL

1.1 WORK INCLUDED

A. Volume control dampers.

B. Shutoff Dampers.

C. Round Duct Taps.

D. Fire dampers.

E. Combination fire and smoke dampers.

F. Back draft dampers.

G. Air turning devices.

H. Flexible duct connections.

I. Duct access doors.

J. Duct test holes.

1.2 RELATED WORK

A. Section 23 05 48 - Vibration and Seismic Controls for HVAC Piping and Equipment.

B. Section 23 31 13 - Metal Ductwork.

1.3 REFERENCES

A. NFPA 90A - Installation of Air Conditioning and Ventilating Systems.

B. SMACNA - Low Pressure Duct Construction Standards.

C. UL 33 - Heat Responsive Links for Fire-Protection Service.

D. UL 555 - Fire Dampers and Ceiling Dampers.

1.4 SUBMITTALS

A. Submit shop drawings and product data under provisions of Division One.

B. Provide shop drawings for shop fabricated assemblies indicated, including volume control dampers duct access doors duct test holes. Provide product data for hardware used.

C. Submit manufacturer's installation instructions under provisions of Division 1, for fire dampers and combination fire and smoke dampers.

PART 2 - PRODUCTS

2.1 VOLUME CONTROL DAMPERS

A. Fabricate in accordance with SMACNA Low Pressure Duct Construction Standards, and as indicated.

B. Fabricate splitter dampers of material same gauge as duct to 24 inches size in either direction, and two gauges heavier for sizes over 24 inches.

C. Fabricate splitter dampers of double thickness sheet metal to streamline shape. Secure blade with continuous hinge or rod. Operate with minimum 1/2 inch diameter rod in self aligning, universal joint, action flanged bushing, with set screw.

D. Fabricate single blade dampers for duct sizes to 9-1/2 x 24 inch.

E. Fabricate multi-blade damper of opposed blade pattern with maximum blade sizes 12 x 72 inch.

1. Assemble center and edge crimped blades in prime coated or galvanized channel frame with suitable hardware.
2. On outside air, return air, and all other dampers required to be low leakage type, provide galvanized blades and frames, seven inches wide maximum, with replaceable vinyl, EPDM, silicone rubber seals on blade edges and stainless steel side seals. Provide blades in a double sheet corrugated type construction for extra strength. Provide hat channel shape frames for strength and blade linkage enclosure to keep linkage out of the air stream. Construction leakage not to exceed 1/2%, based on 2,000 fpm and 4 inch static pressure.

F. Except in round ductwork 12 inches and smaller, provide end bearings. On multiple blade dampers, provide oil-impregnated nylon or sintered bronze bearings.

G. Provide locking, indicating quadrant regulators on single and multi-blade dampers. Where rod lengths exceed 30 inches provide regulator at both ends.

H. On insulated ducts mount quadrant regulators on stand-off mounting brackets, bases, or adapters.

2.2 SHUTOFF DAMPERS

A. Fabricate in accordance with SMACNA Low Pressure Duct Construction Standards, and as indicated.

B. Provide Class I multi-blade damper of parallel blade pattern for all ductwork systems which penetrate the building thermal envelope.

1. Damper shall be constructed of one-piece 16 ga. roll-formed galvanized steel hat-shaped channel frame. Blades shall be 14 ga. roll-formed galvanized steel, airfoil type. Blade edge seals shall be neoprene gaskets mechanically locked to blade edge. Bearings shall be 304 stainless steel, oil-impregnated and self-lubricating sleeve type, turning in extruded holes in damper frame.

C. Shutoff dampers shall have an air leakage rate not greater than 4 cfm/ft^2 of damper surface area at 1.0 in.w.g. and shall be labeled by an approved agency when tested in accordance with AMCA 500D for such purpose.

2.3 ROUND DUCT TAPS

A. Taps to trunk duct for round flexible duct shall be spin-in fitting with locking quadrant butterfly damper, model no. FLD-B03 by Flexmaster or approved equal.

2.4 ACCEPTABLE MANUFACTURERS - FIRE DAMPERS AND COMBINATION FIRE AND SMOKE DAMPERS

A. Greenheck.

B. Louvers and Dampers Inc.

C. Ruskin.

D. Nailor Industries.

E. Pottorff

2.5 FIRE DAMPERS

A. Fabricate in accordance with NFPA 90A and UL 555, and as indicated.

B. Provide curtain type dampers of galvanized steel with interlocking blades. Provide stainless steel closure springs and latches for horizontal installations. Configure with blades out of air stream.

C. Fabricate multiple blade fire dampers per U.L. with 16 gauge minimum galvanized steel frame and blades, oil-impregnated bronze or stainless steel sleeve bearings and plated steel axles, 1/8 x 1/2 inch plated steel concealed linkage, stainless steel closure spring, blade stops, and lock.

D. Fusible links, UL 33, shall separate at 160 degrees F. Provide adjustable link straps for combination fire/balancing dampers.

2.6 COMBINATION FIRE AND SMOKE DAMPERS

A. Fabricate in accordance with NFPA 90A and UL 555, and as indicated.

B. Provide factory sleeve for each damper. Install damper operator on exterior of sleeve and link to damper operating shaft.

C. Fabricate with multiple blades with 16 gauge galvanized steel frame and blades, oil-impregnated bronze or stainless steel sleeve bearings and plated steel axles, stainless steel jamb seals, 1/8 x 1/2 inch plated steel concealed linkage, stainless steel closure spring, blade stops, and lock, and 1/2 inch actuator shaft.

2. Operators shall be spring return electric type suitable to operate on 120 V AC, 60 cycle.
3. Operators shall be UL listed and labeled.

2.7 SMOKE DAMPERS

A. Fabricate in accordance with NFPA 90A and UL 555, and as indicated.

B. Motorized Smoke Dampers: multi-blade type, normally open with power on, close automatically when power is interrupted, UL-listed and labeled damper and damper operator.

2.8 ACCEPTABLE MANUFACTURERS – BACKDRAFT DAMPERS

A. Greenheck

B. American Warming and Vent.

C. Louvers and Dampers Inc.

D. Ruskin.

E. Pottorff

F. Substitutions: Under provisions of Division One.

2.9 BACKDRAFT DAMPERS

A. Gravity back draft dampers, size 18 x 18 inches or smaller, furnished with air moving equipment, may be air moving equipment manufacturers standard construction.

B. Fabricate multi-blade, parallel action gravity balanced back draft dampers of 16 gauge galvanized steel, or extruded aluminum, with blades of maximum 6 inch width, with felt or flexible vinyl sealed edges, linked together in rattle-free manner with 90 degree stop, steel ball bearings, and plated steel pivot pin; adjustment device to permit setting for varying differential static pressure.

C. Gravity backdraft dampers shall have an air leakage not greater than 20 cfm/ft^2 where not less than 24 inches in either dimension and 40 cfm/ft^2 where less than 24 inches in either dimension. The rate of air leakage shall be determined at 1.0 in.w.g. when tested in accordance with AMCA 500D for such purpose.

2.10 ACCEPTABLE MANUFACTURERS – AIR TURNING DEVICES

A. Young Regulator.

B. Titus.

C. Tuttle and Bailey.

D. Substitutions: Under provisions of Division One.

2.11 AIR TURNING DEVICES

A. On duct sizes less than 12 x 12, multi-blade device with blades aligned in short dimension; steel or aluminum construction; with individually adjustable blades, mounting straps.

B. Multi-blade device with radius blades attached to pivoting frame and bracket, steel or aluminum construction, with worm drive mechanism with 18 inch long removable key operator.

2.12 ACCEPTABLE MANUFACTURERS – FLEXIBLE DUCT CONNECTIONS

A. Metaledge.

B. Ventglass.

C. Substitutions: Under provisions of Division One.

2.13 FLEXIBLE DUCT CONNECTIONS TO AIR MOVING EQUIPMENT

A. Fabricate in accordance with SMACNA Low Pressure Duct Construction Standards, and as indicated.

B. UL listed fire-retardant neoprene coated woven glass fiber fabric to NFPA 90A, minimum density 20 oz per sq yd, approximately 6 inches wide, crimped into metal edging strip.

2.14 ACCEPTABLE MANUFACTURERS – DUCT ACCESS DOORS

A. Greenheck.

B. American Warming and Vent.

C. Ruskin.

D. Titus.

E. Substitutions: Under provisions of Division One.

2.15 DUCT ACCESS DOORS

A. Fabricate in accordance with SMACNA Low Pressure Duct Construction Standards and as indicated.

B. Review locations prior to fabrication.

C. Fabricate rigid and close-fitting doors of galvanized steel with sealing gaskets and quick fastening locking devices. For insulated ductwork, install minimum one inch thick insulation with sheet metal cover. Insulation shall be replaceable without field cutting or patching.

D. Access doors smaller than 12 inches square may be secured with sash locks.

E. Provide two hinges and two sash locks for sizes up to 18 inches square, three hinges and two compression latches with outside and inside handles for sizes up to 24 x 48 inches. Provide an additional hinge for larger sizes.

F. Access doors with sheet metal screw fasteners are not acceptable.

2.16 DUCT TEST HOLES

A. Cut or drill temporary test holes in ducts as required. Cap with neat patches, neoprene plugs, threaded plugs, or threaded or twist-on metal caps.

B. Permanent test holes shall be factory fabricated, air tight flanged fittings with screw cap. Provide extended neck fittings to clear insulation.

PART 3 – EXECUTION

3.1 INSTALLATION

A. Install accessories in accordance with manufacturer's instructions.

B. Balancing Dampers

1. Provide at points on low pressure supply, return, and exhaust systems where

branches are taken from larger ducts and as required for air balancing. Use splitter dampers only where indicated.

2. All regulators mounted on externally insulated ductwork shall have 16 gauge elevated platforms at least 1/8 inch higher than the thickness of the insulation. Damper shaft shall have Ventlock No. 607 bearing mounted on ductwork within elevated platform. If duct is inaccessible the operating handle shall be extended and the regulator installed on the face of the wall or ceiling. Where regulators are exposed in finished parts of the building, they shall be flush type, Ventlock No. 666. All regulators shall be manufactured by Ventlock, or approved equal.
3. All dampers in lined ductwork shall have bushing to prevent damper damage to liner.

C. Provide fire dampers at locations indicated, where ducts and outlets pass through fire rated components, and where required by authorities having jurisdiction. Install with required perimeter mounting angles, sleeves, breakaway duct connections, corrosion resistant springs, bearings, bushings and hinges.

D. Demonstrate re-setting of fire dampers to authorities having jurisdiction and Owner's representative.

E. Provide gravity backdraft dampers or motorized shutoff dampers in accessible location nearest to exterior wall/roof penetrations and where indicated for all outdoor air intake and exhaust systems to automatically shut when the associated systems or spaces served are not in use.

F. Provide flexible duct connections immediately adjacent to equipment in ducts associated with fans and motorized equipment. Provide at least one inch slack at all flexible duct connections.

G. Provide duct access doors for inspection and cleaning before and after filters, coils, fans, automatic dampers, at fire dampers, and elsewhere as indicated. Provide minimum 8 x 8 inch size for hand access, 18 x 18 inch size for shoulder access, and as indicated.

H. Provide duct test holes where indicated and required for testing and balancing purposes.

END OF SECTION

SECTION 23 34 00 – HVAC FANS

PART 1 - GENERAL

1.1 GENERAL REQUIREMENTS

A. The requirements of the General Conditions and Supplementary Conditions apply to all work herein.

B. Section 23 02 00 - Basic Materials and Methods is included as a part of this Section as though written in full in this document.

1.2 WORK INCLUDED

A. Centrifugal roof ventilators.

B. Ceiling and inline ventilators.

1.3 RELATED SECTIONS

A. Section 23 05 13 – Common Motor Requirements for HVAC Equipment

B. Section 23 05 48 – Vibration and Seismic Controls for HVAC Piping and Equipment

C. Section 23 09 63 – Energy Management and Control System

D. Section 23 05 93 – Testing, Adjusting and Balancing

1.4 QUALITY ASSURANCE

A. UL Compliance: Fans shall be designed, manufactured, and tested in accordance with UL 705 "Power Ventilators."

B. UL Compliance: Fans and components shall be UL listed and labeled.

C. Nationally Recognized Testing Laboratory Compliance (NRTL): Fans and components shall be NRTL listed and labeled. The term "NRTL" shall be as defined in OSHA Regulation 1910.7.

D. NEMA Compliance: Motors and electrical accessories shall comply with NEMA standards.

E. Electrical Component Standard: Components and installation shall comply with NFPA 70 "National Electrical Code."

F. Sound Power Level Ratings: Comply with AMCA Standard 301 "Method for Calculating Fan Sound Ratings From Laboratory Test Data." Test fans in accordance with AMCA Standard 300 "Test Code for Sound Rating." Fans shall be licensed to bear the AMCA Certified Sound Ratings Seal.

G. Fan Performance Ratings: Establish flow rate, pressure, power, air density, speed of rotation, and efficiency by factory tests and ratings in accordance with AMCA Standard 210/ASHRAE Standard 51 - Laboratory Methods of Testing Fans for Rating.

1.5 SUBMITTALS

A. General: Submit the following in accordance with Conditions of Contract and Division 1 Specification Sections:

B. Product data for selected models, including specialties, accessories, and the following:

1. Certified fan performance curves with system operating conditions indicated.
2. Certified fan sound power ratings.
3. Motor ratings and electrical characteristics plus motor and fan accessories.
4. Materials, gages and finishes, include color charts.
5. Dampers, including housings, linkages, and operators.
6. Full color paint samples.

C. Shop drawings from manufacturer detailing equipment assemblies and indicating dimensions, weights, required clearances, components, and location and size of field connections.

D. Coordination drawings, in accordance with Division 23, Section "Basic Materials and Methods", for roof penetration requirements and for reflected ceiling plans drawn accurately to scale and coordinating penetrations and units mounted above ceiling. Show the following:

1. Roof framing and support members relative to duct penetrations.
2. Ceiling suspension members.
3. Method of attaching hangers to building structure.
4. Size and location of initial access modules for acoustical tile.
5. Ceiling-mounted items including light fixtures, diffusers, grilles, speakers, sprinkler heads, access panels, and special moldings.

F. Wiring diagrams that detail power, signal, and control wiring. Differentiate between manufacturer installed wiring and field installed wiring.

G. Product certificates, signed by manufacturer, certifying that their products comply with specified requirements.

H. Maintenance data for inclusion in Operating and Maintenance Manual specified in Division 1 and Division 23, Section "Basic Materials and Methods".

1.6 DELIVERY, STORAGE, AND HANDLING

A. Fans shall be stored and handled in accordance with the unit manufacturer’s instructions.

B. Lift and support units with the manufacturer's designated lifting or supporting points.

C. Disassemble and reassemble units as required for movement into the final location following manufacturer's written instructions.

D. Deliver fan units as a factory-assembled unit to the extent allowable by shipping limitations, with protective crating and covering.

1.7 ENVIRONMENTAL REQUIREMENTS

A. Do not operate units for any purpose, temporary or permanent, until ductwork is clean, filters are in place, bearings lubricated, and fan has been test run under observation.

1.8 OPERATIONS PERSONNEL TRAINING

A. Provide a training session for the owner's operations personnel. Training session shall be performed by a qualified person who is knowledgeable in the subject system/equipment. Submit a training agenda two (2) weeks prior to the proposed training session for review and approval. Training session shall include at the minimum:

1. Purpose of equipment.
2. Principle of how the equipment works.
3. Important parts and assemblies.
4. How the equipment achieves its purpose and necessary operating conditions.
5. Most likely failure modes, causes and corrections.
6. On site demonstration.

PART 2 - PRODUCTS

2.1 ACCEPTABLE MANUFACTURERS

A. PennBarry

B. Loren Cook Company

C. Greenheck Fan Corporation

D. ACME

E. Twin City Fan and Blower

2.2 GENERAL DESCRIPTION

A. Provide fans that are factory fabricated and assembled, factory tested, and factory finished with indicated capacities and characteristics.

B. Fans and Shafts shall be statically and dynamically balanced and designed for continuous operation at the maximum rated fan speed and motor horsepower.

C. Provide factory baked-enamel finish coat after assembly. Color for roof mounted fans shall be chosen by Architect during the submittal process.

2.3 CENTRIFUGAL ROOF VENTILATORS

A. Fan shall be a spun aluminum, centrifugal, roof mounted, direct driven or belt driven as indicated.

B. Fan shall be listed by Underwriters Laboratories (UL 705). Fan shall bear the AMCA certified ratings seal for sound and air performance.

C. The fan shall be of bolted and welded construction utilizing corrosion resistant fasteners. The spun aluminum structural components shall be constructed of minimum 16 gauge marine alloy aluminum, bolted to a rigid aluminum support structure.

D. The aluminum base shall have continuously welded curb cap corners for maximum leak protection. A discharge baffle conduit chase shall be provided through the curb cap and into the motor compartment to facilitate wiring connections.

E. The motor, bearings and drives shall be mounted on a minimum 14 gauge steel power assembly, isolated from the unit structure with rubber vibration isolators. These components shall be enclosed in a weather-tight compartment, separated from the exhaust

airstream. Unit shall bear an engraved aluminum nameplate and shall be shipped in transit tested packaging.

F. Wheel shall be centrifugal backward inclined, constructed of 100% aluminum, including a precision machined cast aluminum hub. Wheel inlet shall overlap an aerodynamic aluminum inlet cone to provide maximum performance and efficiency. Wheel shall be balanced in accordance with AMCA standard 204-96, balance quality and vibration levels for fans.

G. Motor shall be heavy duty type with permanently lubricated sealed ball bearings.

H. Bearings shall be designed and individually tested specifically for use in air handling applications. Construction shall be heavy duty re-greaseable ball type in a cast iron housing selected for a minimum L50 life in excess of 200,000 hours at maximum cataloged operating speed.

I. Accessories: The following accessories are required.

1. Disconnect Switch: Non-fusible type, with thermal overload protection, mounted inside fan housing, factory-wired through an internal aluminum conduit.
2. Bird Screens: Removable ½ inch mesh, 16 gauge, aluminum or brass wire.
3. Dampers: Gravity backdraft damper or motorized shutoff damper mounted in accessible location. Refer to 23 33 00 – Ductwork Accessories.
4. Roof Curbs: Prefabricated, 12 inch high, heavy-gauge, galvanized steel; mitered and welded corners; 2 inch thick, rigid, fiberglass insulation adhered to inside walls; built-in cant and mounting flange for flat roof decks; and 2 inch wood nailer. Size as required to suit roof opening and fan base. Roof curb shall match roof slope so that the curb is level.

2.4 CEILING AND INLINE VENTILATORS

A. Ceiling and inline ventilators shall be direct drive or belt drive as indicated, centrifugal blower type. Fan wheel shall be constructed of galvanized steel and shall be dynamically balanced. The housing shall be constructed of minimum 20 gauge corrosion resistant galvanized steel and acoustically insulated for quiet operation. Blower and motor assembly shall be easily removable from the housing without disturbing the ductwork. The motor shall be permanently lubricated with built-in thermal overload protection and shall be factory tested prior to shipment. The ceiling ventilators shall be furnished standard with a powder-painted white steel grille.

B. Ventilators shall be certified and licensed to bear the AMCA Seal for Air and Sound Performance. Ventilator performance shall be based on tests and procedures performed in accordance with AMCA publication 211 and comply with the requirements of the AMCA Certified Ratings Program. Fan sound power level ratings shall be based on tests and procedures performed in accordance with AMCA publication 311 and comply with the requirements of the AMCA Certified Ratings Program. Ventilators shall be UL listed and CSA certified.

C. Accessories: The following accessories are required.

1. Dampers:
   a. Aluminum backdraft damper.
   b. Motor-operated volume control damper.
   c. U.L. listed ceiling radiation damper for ceiling fans comply with NFPA Standard 90A rated for 3 hours.

2. Disconnect Switch: Nonfusible type with thermal overload protection.
3. Speed Controls: Fan mounted, solid state speed controller.

PART 3 – EXECUTION

3.1 Install in accordance with manufacturer's instructions.

3.2 All items required for a complete and proper installation are not necessarily indicated on the plans or in the specifications. Provide all items required as per manufacturer's requirements.

END OF SECTION

SECTION 23 35 00 - VEHICLE EXHAUST REMOVAL SYSTEM

Midland Fire Department
Midland , Texas

1.1 Extraction System Overview

1.1 The exhaust system shall be designed to vent 100 % of exhaust gases and particulate safely to the outside of the fire station. The exhaust system shall be designed and installed by factory trained and authorized personnel, certified by the manufacturer of the exhaust system. Manufacturers shall be required to have a minimum of five years of proven manufacturing experience in the manufacture of emergency vehicle exhaust extraction equipment.

1.2 The department shall be able to use the exhaust system for performing engine and pumper checks indoors.

1.3 System must be designed for high temperature vehicle exhaust fire rescue applications. The system shall automatically activate, disconnect, shutdown, and reactivate upon return without human intervention.

1.14 Exceptions and Variances from any of the specifications outlined in these bid specifications must be acknowledged and listed on a sheet attached to your bid. Failure to list and acknowledge exceptions to the specifications will result in rejection of the bid.

2.1 Quality Standard Assurance and Experience:

12.1 All standards of quality are meet and adhered to: UL, NFPA, AMCA, IMC, ASME, UMC, NEC and all local and state building codes. A current ISO-9001-2015 certificate must be included in the bid package from the manufacturer of the system.

12.2 Independent System testing information documenting the overall the effectiveness of the proposed system in a fire hall must be available.

12.3 References: At least 10 recent fire station references in the state within the last five years a list must be included to verify experience in the fire/ rescue market. References are only to be provided for the specific equipment and model number being proposed for this project. Contact information shall be provided upon request.

12.4 Manufacturing Experience: Companies that have 5 or more years of manufacturing experience of automatic vehicle exhaust removal systems for the fire/ rescue market are preferred.

12.5 Installing Contractor must show experience of installing vehicle exhaust removal systems in the fire rescue industry.

3.1 System Description

The exhaust system shall be a source capture system designed to handle exhaust fumes from diesel engines. The system shall address a total of 3 capture points housed in the Midland Fire Station #5. Fans shall be large enough to provide a minimum of 650 cfm per vehicle. System shall be designed to provide as much flexibility as possible. Tailpipe Adapters shall be of similar size throughout. Installation must be neat and clean using best material available. An expandable hose track system shall be used to eliminate long hoses that have dips or loops. On apparatus shall be addressed with a vertical top stack rail.

4.1 Air Volume and Fan Requirements

4.2 The exhaust fan for each facility shall provide a minimum of 650 cfm per vehicle at 6.0 inches static pressure loss. Motor/ Blower curve performance information from the manufacturer must be provided with the bid document showing air handling capacity at various static pressure losses.

4.3 Exhaust system hose drops shall be the same cross sectional diameter as the vehicle tailpipe or greater. Also, exhaust system shall maintain CFM that matches the cfm of the vehicle engine exhaust when running at 1500 RPM. Hose drops that do not match or exceed the size of the tailpipe and the cfm of the engine's exhaust shall not be accepted.

4.4 The fan shall be a backward incline fan made from continuous welded construction. Fan housings that are screwed together or riveted are not acceptable. Fans shall be tested and balanced prior to installation, be manufactured in an ISO Certified Facility in accordance to AMCA Certification Standards. A safety disconnect in the vicinity of the blower fan motor must be provided.

5.1 Turnkey Installation

5.1 Complete exhaust system installation including the exhaust fan, control box, ductwork, track, hose and nozzle connection must be completed. All electrical work from the panel out is included in this scope of work. Tailpipe modifications from the muffler out that are required to ensure proper system operation are to be included in the scope of the work. All duct material installed shall conform to existing Class II SMACNA Standards. An appropriate rain cap shall be provided on the building exterior.

5.2 All system components shall be labeled with manufacturer identification.

5.3 Installation of Exhaust System shall be accomplished by a factory trained and authorized installation team that specializes in the business of installing emergency response exhaust systems. Name of installation firm must be indicated in the bid document with exhaust removal system experience provided.

6.1 Nozzle Attachment

6.1 The Exhaust Capture System must provide complete, 100% exhaust removal at the source from vehicle start up to exit of the apparatus from the station. In no event shall the nozzle allow for the potential escaping of diesel exhaust into the bay area. A check valve is required to stop contaminant from escaping into the bay area. It is a requirement of this bid that the system be capable of capturing 100% of exhaust gas and particulate even in the event the fan does not activate. Any nozzle that does not seal completely seal 100% around the tailpipe will not be accepted.

6.2 The exhaust system shall be attached to the vehicle within 3 feet of the door threshold.

6.3 The system shall be designed so that attachment to exhaust hose is accomplished by the operator standing erect and with one simple motion to connect system to the vehicle.

6.4 A rigid lower hose section with handle shall be provided to allow for easy hose connection.

6.5 The nozzle shall allow for the introduction of ambient air to significantly cool the air stream inside the hose and prolong the life of the equipment. Any system that does not seal around the tailpipe and allow for cool ambient air introduction shall be eliminated.

6.6 All adapters and nozzles shall be of similar size to allow vehicles to freely move from bay to bay. Any Nozzle adapter shall not exceed 7-inch diameter to allow adequate ground to tailpipe clearance.

6.7 Tailpipe adapter and nozzle must have inlet that is 5-inches or greater so, exhaust airflow is not impeded. Nozzle to flex hose elbow transition must also be 5-inches or larger to maximize airflow.

7.1 Nozzle Release and Material

7.1 The release of the nozzle shall occur by a forward motion of an apparatus. The separation shall be accomplished by a simple mechanical release. Systems requiring support systems for nozzle separation such as pneumatics or electronics are discouraged.

7.2 The disconnection of the hose shall not be *speed dependant and* have a balancer that helps lift the exhaust nozzle off the vehicle tailpipe. The nozzle must separate from the tailpipe at the same point each time irregardless of the speed of the vehicle.

7.3 Any auto-release system that is speed sensitive requiring the driver to modify the exit speed to control the nozzle release shall not be accepted. Any nozzle requiring trip switches and support systems such as compressed air or electrical support to operate or release are discouraged.

7.4 Release of nozzle from the tailpipe shall not cause tugging or stretching of the hose to occur. Stress from separation and transporting of the hose to the door shall be borne by an internal cable to prolong life of the hose.

7.5 Nozzle elbows constructed of one piece, cast aluminum are preferred to eliminate the possibility of denting, rusting and breaking. Tailpipe adapters and nozzles should be made of rust resistant components

8.1 Sliding Aluminum Track/ Expandable Hose Track

8.2The exhaust system shall use a lightweight aluminum track support system to convey the exhaust hose from door threshold to vehicle park position. The aluminum track shall be of box lock design with two cross supports for rigidity. Systems that use steel uni-strut or aluminum H track design are not acceptable.

8.3 An expandable hose track system shall be offered in the station to eliminate hose loops and long hoses. The expandable hose shall be 6-inch diameter and have a compression/expansion ratio of 6:1. The expandable hose shall be attached to the track using a set of trolleys secured to the hose at 9-inch intervals.

8.4 Rail and track system must be supported using adjustable, telescopic support legs allowing for future adjustment and changes to the system.

9.1 The System Balancer

9.1.1 The hose balancer shall be designed to operate as a non-locking or self-locking adjustable balancer with a lifting capacity of no less than 31 lbs to keep hose off bay floor.

9.1.29.2.1 Hose shall be supported by the balancer using a lifting elbow with an internal cable to reduce stress and wear and tear to the hose.

10.1 Extraction System Exhaust Hose

10.2 The flexible exhaust hose is manufactured for the sole purpose of venting high temperature exhaust gases which are produced by internal combustion engines.

10.3 This construction of hose must be capable of operating at a continuous minimum temperature of 400°F and intermittent temperatures of 550°F. Hoses that are not rated at or higher than these

temperatures will not be accepted. Testing support data verifying the hose rating must be included in the submittal portion of this bid package.

10.4 Five-inch diameter flex hoses are preferred to smaller hoses to provide less static pressure loss and more efficient fan performance.

10.5 A two foot, rigid, lower section hose shall be included with extreme heat tolerance. Hose shall be tested by independent certified laboratory to be capable to 850 degrees F. Lower section hose additionally shall be flame retardant and be constructed using engineered materials to maintain shape and integrity.

11.1 Auto-Start Control System

11.2 Shall be designed to sense the output pressure normally generated by any internal combustion engine. When the nozzle is connected to the vehicle's exhaust tailpipe and the vehicle is started by the operator an automatic controller, the increased output pressure shall be detected by a pressure sensor and activate the exhaust fan. A low voltage timer will keep the exhaust fan operating for a period of time designated by fire department procedures. As an option, ignition start activation may be also offered for consideration.

11.3 Controller Electrical controller must be UL listed/approved and manufactured in accordance with Underwriters Laboratories standard UL-508 enclosed industrial control panels and incorporate a limited energy control circuit. For safety the enclosure must be NEMA4X rated fiberglass construction with a water tight seal.

12.1 System Warranty

12.1 Complete exhaust system parts warranty shall be for a minimum of 5 years. A warranty certificate describing the warranty to be provided must be included in the bid. Location and name of nearest service outlet should be listed in the bid. Location of parts inventory shall be indicated as well.

13.0 POINT OF ORIGIN:

13.1 Equipment shall be manufactured by a U.S. Company that is base headquartered in the USA. Systems that are built using 100% American parts supplied from U.S. vendors are preferred. All components of shall be American Standard.

END OF SECTION

SECTION 23 35 00 - VEHICLE EXHAUST REMOVAL SYSTEM

Midland Fire Department
Midland , Texas

1.1 Extraction System Overview

1.1 The exhaust system shall be designed to vent 100 % of exhaust gases and particulate safely to the outside of the fire station. The exhaust system shall be designed and installed by factory trained and authorized personnel, certified by the manufacturer of the exhaust system. Manufacturers shall be required to have a minimum of five years of proven manufacturing experience in the manufacture of emergency vehicle exhaust extraction equipment.

1.2 The department shall be able to use the exhaust system for performing engine and pumper checks indoors.

1.3 System must be designed for high temperature vehicle exhaust fire rescue applications. The system shall automatically activate, disconnect, shutdown, and reactivate upon return without human intervention.

1.14 Exceptions and Variances from any of the specifications outlined in these bid specifications must be acknowledged and listed on a sheet attached to your bid. Failure to list and acknowledge exceptions to the specifications will result in rejection of the bid.

2.1 Quality Standard Assurance and Experience:

12.1 All standards of quality are meet and adhered to: UL, NFPA, AMCA, IMC, ASME, UMC, NEC and all local and state building codes. A current ISO-9001-2015 certificate must be included in the bid package from the manufacturer of the system.

12.2 Independent System testing information documenting the overall the effectiveness of the proposed system in a fire hall must be available.

12.3 References: At least 10 recent fire station references in the state within the last five years a list must be included to verify experience in the fire/ rescue market. References are only to be provided for the specific equipment and model number being proposed for this project. Contact information shall be provided upon request.

12.4 Manufacturing Experience: Companies that have 5 or more years of manufacturing experience of automatic vehicle exhaust removal systems for the fire/ rescue market are preferred.

12.5 Installing Contractor must show experience of installing vehicle exhaust removal systems in the fire rescue industry.

3.1 System Description

The exhaust system shall be a source capture system designed to handle exhaust fumes from diesel engines. The system shall address a total of 8 capture points housed in the Midland Fire Station #11. Fans shall be large enough to provide a minimum of 650 cfm per vehicle. System shall be designed to provide as much flexibility as possible. Tailpipe Adapters shall be of similar size throughout. Installation must be neat and clean using best material available. An expandable hose track system shall be used to eliminate long hoses that have dips or loops. On apparatus shall be addressed with a vertical top stack rail.

4.1 Air Volume and Fan Requirements

4.2 The exhaust fan for each facility shall provide a minimum of 650 cfm per vehicle at 6.0 inches static pressure loss. Motor/ Blower curve performance information from the manufacturer must be provided with the bid document showing air handling capacity at various static pressure losses.

4.3 Exhaust system hose drops shall be the same cross-sectional diameter as the vehicle tailpipe or greater. Also, exhaust system shall maintain CFM that matches the cfm of the vehicle engine exhaust when running at 1500 RPM. Hose drops that do not match or exceed the size of the tailpipe and the cfm of the engine's exhaust shall not be accepted.

4.4 The fan shall be a backward incline fan made from continuous welded construction. Fan housings that are screwed together or riveted are not acceptable. Fans shall be tested and balanced prior to installation, be manufactured in an ISO Certified Facility in accordance to AMCA Certification Standards. A safety disconnect in the vicinity of the blower fan motor must be provided.

5.1 Turnkey Installation

5.1 Complete exhaust system installation including the exhaust fan, control box, ductwork, track, hose and nozzle connection must be completed. All electrical work from the panel out is included in this scope of work. Tailpipe modifications from the muffler out that are required to ensure proper system operation are to be included in the scope of the work. All duct material installed shall conform to existing Class II SMACNA Standards. An appropriate rain cap shall be provided on the building exterior.

5.2 All system components shall be labeled with manufacturer identification.

5.3 Installation of Exhaust System shall be accomplished by a factory trained and authorized installation team that specializes in the business of installing emergency response exhaust systems. Name of installation firm must be indicated in the bid document with exhaust removal system experience provided.

6.1 Nozzle Attachment

6.1 The Exhaust Capture System must provide complete, 100% exhaust removal at the source from vehicle start up to exit of the apparatus from the station. In no event shall the nozzle allow for the potential escaping of diesel exhaust into the bay area. A check valve in the tailpipe adaptor or some other method to seal off the backwash of toxic exhaust gases is required to stop contaminant from escaping into the bay area during high RPM engine operation or when the system is not powered up during a power failure. It is a requirement of this bid that the system be capable of capturing 100% of exhaust gas and particulate even in the event the fan does not activate. Any nozzle that does not seal completely seal 100% around the tailpipe will not be accepted.

6.2 The exhaust system shall be attached to the vehicle within 3 feet of the door threshold.

6.3 The system shall be designed so that attachment to exhaust hose is accomplished by the operator standing erect and with one simple motion to connect system to the vehicle.

6.4 A rigid lower hose section with handle shall be provided to allow for easy hose connection.

6.5 The nozzle shall allow for the introduction of ambient air to significantly cool the air stream inside the hose and prolong the life of the equipment. Any system that does not seal around the tailpipe and allow for cool ambient air introduction shall be eliminated.

6.6 All adapters and nozzles shall be of similar size to allow vehicles to freely move from bay to bay. Any Nozzle adapter shall not exceed 7-inch diameter to allow adequate ground to tailpipe clearance.

6.7 Tailpipe adapter and nozzle must have inlet that is 5-inches or greater so, exhaust airflow is not restricted. Nozzle to flex hose elbow transition must also be 5-inches or larger to maximize airflow.

7.1 Nozzle Release and Material

7.1 The release of the nozzle shall occur by a forward motion of an apparatus. The separation shall be accomplished by a simple mechanical release. Systems requiring support systems for nozzle separation such as pneumatics or electronics are discouraged.

7.2 The disconnection of the hose shall not be *speed dependant and* have a balancer that helps lift the exhaust nozzle off the vehicle tailpipe. The nozzle must separate from the tailpipe at the same point each time irregardless of the speed of the vehicle.

7.3 Any auto-release system that is speed sensitive requiring the driver to modify the exit speed to control the nozzle release shall not be accepted. Any nozzle requiring trip switches and support systems such as compressed air or electrical support to operate or release are discouraged.

7.4 Release of nozzle from the tailpipe shall not cause tugging or stretching of the hose to occur. Stress from separation and transporting of the hose to the door shall be borne by an internal cable to prolong life of the hose.

7.5 Nozzle elbows constructed of one piece, cast aluminum are preferred to eliminate the possibility of denting, rusting and breaking. Tailpipe adapters and nozzles should be made of rust resistant components

8.1 Suction Rail

8.1.1 The suction rail system shall be comprised of Rail Sections which shall have a length of six feet (6'). Aluminum Material shall be 6063-T-5 with a standard mill finish.

8.1.2 The aluminum suction rail shall be constructed from a one-piece continuous extruded aluminum profile. Construction shall be 6" round in diameter, with guide rails on each side to accommodate the external trolley assembly, and molded slots on the top for leg and support bracing

8.1.3 The trolley assembly shall be of external guide rail design. Four Delron wheels must be out of the exhaust airstream and allow the trolley assembly to roll freely along the external guide rails. The chassis shall include a fitted cone assembly, designed to part the memory sealing lips. The cone assembly shall be designed with a series of friction rollers. These rollers shall be designed to reduce the resistance between the memory lips and the cone assembly.

8.1.4Shock absorber assembly shall incorporate an adjustable hydraulic cylinder, capable of reducing the forward impact of the trolley assembly, without causing damage to either the suction rail or the trolley assembly.

8.1.5 A rubber bumper shall be located on the trolley assembly and designed as a contact point. The hydraulic cylinder shall be equipped with a rubber bumper end stop. Both bumpers shall be designed to align upon impact, and at no time shall metal to metal or plastic to metal contact be allowed.

9.1 The System Balancer

9.1.1 The hose balancer shall be designed to operate as a non-locking or self-locking adjustable balancer with a lifting capacity of no less than 31 lbs to keep hose off bay floor.

9.1.29.2.1 Hose shall be supported by the balancer using a lifting elbow with an internal cable to reduce stress and wear and tear to the hose.

10.1 Extraction System Exhaust Hose

10.2 The flexible exhaust hose is manufactured for the sole purpose of venting high temperature exhaust gases which are produced by internal combustion engines.

10.3 This construction of hose must be capable of operating at a continuous minimum temperature of 400°F and intermittent temperatures of 550°F. Hoses that are not rated at or higher than these temperatures will not be accepted. Testing support data verifying the hose rating must be included in the submittal portion of this bid package.

10.4 Five inch diameter flex hoses are preferred to smaller hoses to provide less static pressure loss and more efficient fan performance.

10.5 A two foot, rigid, lower section hose shall be included with extreme heat tolerance. Hose shall be tested by independent certified laboratory to be capable to 850-950 degrees F. Lower section hose additionally shall be flame retardant and be constructed using engineered materials to maintain shape and integrity.

11.1 Auto-Start Control System

11.2 Shall be designed to sense the output pressure normally generated by any internal combustion engine. When the nozzle is connected to the vehicle's exhaust tailpipe and the vehicle is started by the operator an automatic controller, the increased output pressure shall be detected by a pressure sensor and activate the exhaust fan. A low voltage timer will keep the exhaust fan operating for a period of time designated by fire department procedures.

11.3Controller Electrical controller must be UL listed/approved and manufactured in accordance with Underwriters Laboratories standard UL-508 enclosed industrial control panels and incorporate a limited energy control circuit. For safety the enclosure must be NEMA4X rated fiberglass construction with a water tight seal.

12.1 System Warranty

12.1 Complete exhaust system parts warranty shall be for a minimum of 5 years. A warranty certificate describing the warranty to be provided must be included in the bid. Location and name of nearest service outlet should be listed in the bid. Location of parts inventory shall be indicated as well. All equipment must be supplied by one system manufacturer with the complete system covered in its entirety by the manufacturer’s warranty.

13.0 POINT OF ORIGIN:

13.1 Equipment shall be manufactured by a U.S. Company that is base headquartered in the USA. Systems that are built using 100% American parts supplied from U.S. vendors are preferred. All components of shall be American Standard.

End of section

SECTION 23 37 13 - AIR DISTRIBUTION DEVICES

PART 1 - GENERAL

1.1 WORK INCLUDED

A. Ceiling air diffusers.

B. Wall registers and grilles.

C. Louvers.

D. Other air devices indicated on drawings and schedules.

1.2 RELATED SECTIONS

A. Section 23 02 00 – Basic Materials and Methods

B. Section 23 05 93 – Testing, Adjusting and Balancing

C. Section 23 31 13 – Metal Ductwork

D. Section 23 31 16 – Fibrous Glass Ductwork

E. Section 23 31 19 – Ductwork Accessories

1.3 QUALITY ASSURANCE

A. Manufacturer's Qualifications: Firms regularly engaged in manufacture of air distribution devices of types and capacities required, whose products have been in satisfactory use in similar service for not less than 5 years.

B. Codes and Standards:
1. ARI Compliance: Test and rate air distribution devices in accordance with ARI 650 "Standard for Air Outlets and Inlets".
2. ASHRAE Compliance: Test and rate air distribution devices in accordance with ASHRAE 70 "Method of Testing for Rating the Air Flow Performance of Outlets and Inlets".
3. AMCA Compliance: Test and rate louvers in accordance with AMCA 500 "Test Method for Louvers, Dampers and Shutters".
4. AMCA Seal: Provide louvers bearing AMCA Certified Rating Seal.
5. NFPA Compliance: Install air distribution devices in accordance with NFPA 90A "Standard for the Installation of Air Conditioning and Ventilating Systems".

1.4 SUBMITTALS

A. Product Data: Submit manufacturer's technical product data for air distribution devices including the following:
1. Schedule of air distribution devices indicating drawing designation, room location, number furnished, model number, size, and accessories furnished.
2. Data sheet for each type of air distribution devices, and accessory furnished; indicating construction, finish, and mounting details.
3. Performance data for each type of air distribution devices furnished, including aspiration ability, temperature and velocity traverses; throw and drop; and noise criteria ratings. Indicate selections on data.

B. Shop Drawings: Submit manufacturer's assembly-type shop drawing for each type of air distribution devices, indicating materials and methods of assembly of components.

C. Maintenance Data: Submit maintenance data, including cleaning instructions for finishes, and spare parts lists. Include this data, product data, and shop drawings in maintenance manuals; in accordance with requirements of Division 1.

1.5 PRODUCT DELIVERY, STORAGE AND HANDLING

A. Deliver air distribution devices wrapped in factory-fabricated fiber-board type containers. Identify on outside of container type of outlet or inlet and location to be installed. Avoid crushing or bending and prevent dirt and debris from entering and settling in devices.

B. Store air distribution devices in original cartons and protect from weather and construction work traffic. Where possible, store indoors; when necessary to store outdoors, store above grade and enclose with waterproof wrapping.

1.6 WARRANTY

A. Warrant the installation of the Work specified herein for one year against becoming unserviceable or causing an objectionable appearance resulting from defective or nonconforming workmanship.

PART 2 – PRODUCTS

2.1 ACCEPTABLE MANUFACTURERS

A. Titus Company

B. Metalaire Industries, Inc.

C. Nailor Industries

D. Krueger

E. Price

F. Substitutions under provisions of Division One.

2.2 GENERAL DESCRIPTION

A. Unless otherwise indicated, provide manufacturer’s standard air devices when shown of size, shape, capacity, type and accessories indicated on drawings and schedules, constructed of materials and components as indicated and as required for complete installation and proper air distribution.

B. Provide air devices that have, as minimum, temperature and velocity traverses, throw and drop, and noise criteria ratings for each size device and listed in manufacturer’s current data.

C. Unless noted otherwise on drawings, the finish shall be #26 white. The finish shall be an anodic acrylic paint, baked at 315°F for 30 minutes. The pencil hardness must be HB to H. The paint must pass a 100 hour ASTM D117 Corrosive Environments Salt Spray Test without creepage, blistering, or deterioration of film. The paint must pass a 250 hour ASTM-870 Water Immersion Test. The paint must also pass the ASTM D-2794 Reverse Impact Cracking Test with a 50 inch pound force applied.

D. Provide air device with border styles that are compatible with adjacent ceiling or wall system, and that are specially manufactured to fit into the wall construction or ceiling module with accurate fit and adequate support. Refer to architectural construction drawings and specifications for types of wall construction and ceiling systems.

E. Provide integral volume damper with roll formed steel blades where indicated on drawings or schedules. Dampers shall be opposed blade design with a screw driver slot or a concealed lever operator for adjustment through the face of the air device.

F. Air devices designated for fire rated systems shall be pre-assembled with UL classified radiation damper and thermal blanket. Fire rated air devices shall be shipped completely assembled; one assembly per carton, Each assembly shall be enclosed in plastic shrink wrap with installation instructions.

2.3 LOUVERS

A. Except as otherwise indicated, provide manufacturer's standard louvers where shown; of size, shape, capacity and type indicated; constructed of materials and components as indicated, and as required for complete installation.

B. Provide louvers that have minimum free area, and maximum pressure drop of each type as listed in manufacturer's current data, complying with louver schedule.

C. Provide louvers with frame and sill styles that are compatible with adjacent substrate, and that are specifically manufactured to fit into construction openings with accurate fit and adequate support, for weatherproof installation. Refer to architectural construction drawings and specifications for types of substrate.

D. Louvers shall be constructed of aluminum extrusions, ASTM B 221, Alloy 6063-T5. Weld units or use stainless steel fasteners.

E. Louver Screens: On inside face of exterior louvers, provide 1/2" square mesh anodized aluminum wire bird screens mounted in removable extruded aluminum frames.

F. Acceptable Manufacturers:
1. Ruskin Manufacturing Company
2. Greenheck Company
3. Louvers and Dampers, Inc.
4. Pottorff
5. Arrow
6. Substitutions under provisions of Division One.

PART 3 – EXECUTION

3.1 All interior surfaces of all air devices shall be painted flat black.

3.2 See floor plans for type, neck size and CFM of air for all air distribution devices.

3.3 Install all air distribution devices as detailed on plans and in accordance with manufacturer’s recommendations.

END OF SECTION

SECTION 23 41 00 - AIR FILTERS

PART 1 - GENERAL

1.1 GENERAL REQUIREMENTS

A. The requirements of the General Conditions and Supplementary Conditions apply to all work herein.

B. The Basic Materials and Methods, Section 23 02 00, are included as a part of this Section as though written in full in this document.

1.2 SCOPE

Scope of the Work shall include the furnishing and complete installation of the equipment covered by this Section, with all auxiliaries, ready for owner's use.

PART 2 - PRODUCTS

2.1 FILTERS

A. Air filters shall be medium efficiency ASHRAE pleated panels consisting of cotton and synthetic media, welded wire media support grid, and beverage board enclosing frame, Camfil Farr 30/30, 2-inch thick or approved equal.

B. APPROVED MANUFACTURERS: The following manufacturers are approved subject to specification compliance.

1. American Air Filter.
2. Camfil.
3. Airguard Industries, Inc.
4. Cambridge.
5. Filtration Group

2.2 LOW VELOCITY FILTER SECTION

A. Filters shall be of the throwaway cartridge type in 24 inches X 24 inches X 2 inch frames. When installing multiple filters into slide-in frames tape adjacent filters together with duct tape to prevent bypassing of air around the filter. Media shall be rated at 500 feet per minute.

B. Filtering media shall be formed of non-woven reinforced cotton fabric type filtering media bonded to 96% open area media support grid folded into a non-creased radial pleat design. The filter pack shall be bonded to the inclosing frame to prevent air bypass. Minimum Efficiency Reporting Value of MERV 8 when evaluated under the guidelines of ASHRAE Standard 52.2-2017. Initial resistance shall not exceed 0.23 inches water gauge at 350 FPM face velocity.

PART 3 - EXECUTION

3.1 INSTALLATION

A. Install differential pressure switch to activate "Filter Dirty" light when pressure difference across filters reaches 0.5 inch W.G. (adjustable). Locate "filter dirty" lights in mechanical rooms with identifying label

B. Install and relocate filters in the mechanical or the storage room in accordance with manufacturer's recommendations.

C. Refer to Section 23 02 00 for additional filter information.

END OF SECTION

SECTION 23 51 00 - BREECHINGS, CHIMNEYS, AND STACKS

PART 1 - GENERAL

1.1 SECTION INCLUDES

A. Fabricated breechings.

B. Manufactured chimneys for gas fired equipment.

C. Vent dampers.

D. Refractory lined chimneys.

E. Manufactured double wall chimneys for fuel fired equipment.

F. Draft inducers.

1.2 RELATED SECTIONS

A. Section 23 05 13 – Common Motor Requirements for HVAC Equipment.

B. Section 23 07 16 – HVAC Equipment Insulation.

C. Section 22 30 00 – Plumbing Equipment.

1.3 REFERENCES

A. ANSI/ASTM A167 - Stainless and Heat-Resisting Chromium-Nickel Steel Plate, Sheet, and Strip.

B. ANSI/ASTM A525 - Steel Sheet, Zinc-Coated (Galvanized) by the Hot-Dip Process, General Requirements.

C. ANSI/ASTM C64 - Refractories for Incinerators and Boilers.

D. ANSI/ASTM C105 - Ground Fire Clay as a Refractory Mortar for Laying-up Fireclay Brick.

E. ANSI Z21.66 - Electrically Operated Automatic Vent Damper Devices for Use with Gas-Fired Appliances.

F. ANSI Z21.67 - Mechanically Actuated Automatic Vent Damper Devices for Use with Gas-Fired Appliances.

G. ANSI Z21.68 - Thermally Operated Automatic Vent Damper Devices for Use with Gas-Fired Appliances.

H. ANSI Z181.1 (UL 959) - Medium Heat Appliance Factory Built Chimneys.

I. ANSI Z223.1 (NFPA 54) - The National Fuel Gas Code.

J. ASHRAE - Handbook, Equipment Volume, Chapter "Chimney, Gas, Vent, and Fireplace Systems."

K. ASTM A527 - Steel Sheet, Zinc-Coated (Galvanized) by the Hot-Dip Process, Lock-Forming Quality.

L. ASTM A569 - Steel, Sheet and Strip, Carbon (0.15 Maximum Percent) Hot-Rolled Commercial Quality.

M. ASTM C401 - Classification of Castable Refractories.

N. NFPA 211 - Standard for Chimneys, Fireplaces, Vents, and Solid Fuel-Burning Appliances.

O. SMACNA - HVAC Duct Construction Standards - Metal and Flexible.

P. UL 103 - Standard for Factory Built Low Heat Chimneys.

Q. UL 127 - Standard for Factory Built Fireplaces.

R. UL 378 - Standard for Draft Equipment.

S. UL 441 - Standard for Gas Vents.

T. UL 641 - Standard for Low Temperature Venting Systems.

1.4 DEFINITIONS

A. Breeching: Vent Connector.

B. Chimney: Primarily vertical shaft enclosing at least one vent for conducting flue gases outdoors.

C. Smoke Pipe: Round, single wall vent connector.

D. Vent: That portion of a venting system designed to convey flue gases directly outdoors from a vent connector or from an appliance when a vent connector is not used.

E. Vent Connector: That part of a venting system that conducts the flue gases from the flue collar of an appliance to a chimney or vent, and may include a draft control device.

1.5 DESIGN REQUIREMENTS

A. Factory built vents and chimneys used for venting natural draft appliances shall comply with NFPA 211 and should be UL listed and labeled.

1.6 SUBMITTALS

A. Submit shop drawings under provisions of Division One.

B. Submit shop drawings indicating general construction, dimensions, weights, support and layout of breechings. Where factory built units are used submit layout Drawings indicating plan view and elevations.

C. Submit product data under provisions of Division One.

D. Submit product data indicating factory built chimneys, including dimensional details of components and flue caps, dimensions and weights.

E. Submit manufacturer's installation instructions under provisions of Division One.

1.7 QUALIFICATIONS

A. Manufacturer: Company specializing in the manufacture of products specified in this Section with minimum five years documented experience.

1.8 REGULATORY REQUIREMENTS

A. Conform to applicable ANSI Z223.1 code for installation of natural gas burning appliances and equipment.

PART 2 - PRODUCTS

2.1 MANUFACTURERS

A. Metalbestos.

B. American Metal Products.

C. AMPCO.

D. Van - Packer

E. Substitutions: Under provisions of Division One.

2.2 BREECHING

A. Fabricate of ASTM A569 carbon steel. Fabricate breechings less than 24 inch diameter of ASTM A527 galvanized sheet steel, lock forming quality with ANSI/ASTM A525 zinc coating.

B. Fabricate breechings from following minimum gages. Refer to SMACNA HVAC Duct Construction Standards - Metal and Flexible.

1. Sizes up to 12 inches: 18 gage.
2. Sizes 13 inches to 24 inches: 16 gage.
3. Sizes 25 inches to 36 inches: 14 gage.
4. Sizes 37 inches to 60 inches: 12 gage.
5. Sizes over 60 inches: 10 gage.

C. Provide adjustable self-actuating barometric draft dampers full size of breeching.

D. Provide cleanout doors of same gage as breeching.

E. Weld longitudinal seams. Fabricate joints by welding, lapping and bolting, or with companion flanges. For breechings less than 24 inches diameter provide groove seam (pipe lock or flat lock) with end joints beaded and crimped.

F. Reinforce rectangular breeching with angle frames and round breeching with flanged girth joints or angle frames. Refer to SMACNA HVAC Duct Construction Standards - Metal and Flexible.

1. Sizes up to 30 inches: No reinforcing required.
2. Sizes 31 inches to 36 inches: 1-1/2 inches x 1-1/2 inches x 3/16 inch, at 60 inch centers.
3. Sizes 37 inches to 60 inches: 2 inches x 2 inches x 1/4 inch, at 60inch centers.
4. Sizes over 60 inches: 3 inches x 3 inches x 1/2 inch, at 60 inch centers.

G. Fabricate breeching fittings to match adjoining breechings. Fabricate elbows with center-line radius equal to breeching width. Limit angular tapers to 20 degrees maximum.

2.3 TYPE B DOUBLE WALL GAS VENTS

A. Fabricate inner pipe of sheet aluminum, and outer pipe of galvanized sheet steel, tested in compliance with UL 441.

B. Provide mechanically actuated vent dampers, same size as draft hood collar, constructed of stainless steel or galvanized steel, with corrosion-resistant components, in compliance with ANSI Z21.

2.4 REFRACTORY LINED METAL STACKS

A. Fabricate jacket for size 36 inches and smaller of 24 gage galvanized steel with grooved seam joint, or 26 gage aluminized steel with riveted seams. For sizes 39 inches and larger fabricate of 11 gage galvanized steel with welded seam joint.

B. Weld heavy gage stack sections together in factory. Factory applies heat resistant paint to each stack section and accessory with primer and finish paint. Touch-up or refinish in field.

C. Refractory lining shall be minimum 2 inch thick, ANSI/ASTM C64 proprietary material ASTM C401 Class _____ tested to UL 959 and UL listed to withstand 2000 degrees F without fusion, have maximum acid extraction of 0.2 percent, have minimum of 3200 psi cold crush strength, and be positively bonded to steel jacket, jointed with ANSI/ASTM C105 mortar.

D. Provide accessories each bearing factory-applied UL label.

1. Anchor Lugs: Acid resistant coated cast iron.
2. Clean Out Section: Welded to base of stack, with gasket, and bolt tightened inspection plate.
3. Branching Sections: Construct with welded joints, lined with refractory, finished with smooth transition and no exposed metal on inside.
4. Spark Screen: Type 304 stainless steel, 16 gage 1/2 inch x 1/2 inch mesh, with rolled angle and draw band.
5. Drawbands: 8 inch wide, same material as jacket, fastened with nuts and bolts.
6. Roof Penetration: Factory fabricated thimble, flashing and storm collar.

2.5 DOUBLE WALL METAL STACKS

A. Provide double wall metal stacks, tested UL listed, for use with building heating equipment, in compliance with NFPA 211.

B. Fabricate with 1 inch minimum air space between walls. Construct inner jacket of 20 gage ANSI/ASTM A167 Type 304 stainless steel. Construct outer jacket of Type 304 stainless steel 24 gage for sizes 10 inches to 24 inches and 20 gage for sizes 28 inches to 48 inches.

C. Provide accessories each bearing factory applied UL label.

1. Ventilated Roof Thimble: Consists of roof penetration, vent flashing with spacers and storm collar.
2. Exit Cone: Consists of inner cone, and outer jacket, to increase stack exit velocity

1.5 times.

3. Stack Cap: Consists of conical rainshield with inverted cone for partial rain protection with low flow resistance.

2.6 Provide Heat-Fab-SAF-T-C1 vent, special stainless steel, double wall gas vent for all AERCO boilers as per manufacturer's recommendations.

PART 3 - EXECUTION

3.1 INSTALLATION

A. Install in accordance with manufacturer's instructions.

B. Install in accordance with recommendations of ASHRAE -Handbook, Equipment Volume, Chapter "Chimney, Gas, Vent, and Fireplace Systems", and ANSI Z223.1 (NFPA 54).

C. Install breechings with minimum of joints. Align accurately at connections, with internal surfaces smooth.

D. Support breechings from building structure, rigidly with suitable ties, braces, hangers and anchors to hold to shape and prevent buckling. Support vertical breechings, chimneys, and stacks at 12 foot spacing, to adjacent structural surfaces, or at floor penetrations. Refer to SMACNA HVAC Duct Construction Standards - Metal and Flexible for equivalent duct support configuration and size.

E. Install concrete inserts for support of breechings, chimneys, and stacks in coordination with formwork.

F. Pitch breechings with positive slope up from fuel-fired equipment to chimney or stack.

G. Coordinate installation of dampers, and induced draft fans. Refer to Section 16180.

H. For Type B double wall gas vents, maintain UL listed minimum clearances from combustibles. Assemble pipe and accessories as required for complete installation.

I. Install vent dampers, locating close to draft hood collar, and secured to breeching.

J. Assemble and install stack sections in accordance with NFPA 82, industry practices, and in compliance with UL listing. Join sections with acid-resistant joint cement to ANSI/ASTM C105. Connect base section to foundation using anchor lugs.

K. Level and plumb chimney and stacks.

L. Clean breechings, chimneys, and stacks during installation, removing dust and debris.

M. At appliances, provide slip joints permitting removal of appliances without removal or dismantling of breechings, chimneys, or stacks.

N. Provide minimum length of breeching to connect appliance to chimney. Provide Type B chimney continuously from appliances.

3.2 SCHEDULE

EQUIPMENT	BREECHING	CHIMNEY/STACK
Furnace	Galvanized	Type B
Unit Heater	Galvanized	Type B

END OF SECTION

SECTION 23 51 26 - FLUE PIPE SYSTEMS

PART 1 - GENERAL

1.1 GENERAL REQUIREMENTS

A. The requirements of the General Conditions and Supplementary Conditions apply to all work herein.

B. The Basic Materials and Methods, Section 23 02 00, are included as a part of this Section as though written in full in this document.

1.2 SCOPE

Scope of the Work shall include the furnishing and complete installation of the equipment covered by this Section, with all auxiliaries, ready for owner's use.

PART 2 - PRODUCTS

2.1 FLUE VENTS:

A. Required for boilers:

B. Pipe: Double pipe galvanized steel with air space between inner and outer pipes. Extend into cap.

C. Caps: Galvanized steel, Brieidert (or similar Acme or Triangle) Type L on stack extension above a roof jack which shall be a minimum of two feet high. Bottom plate of cap shall be higher than any parapet or wall within 20', and in no case less than two feet above the roof. Cap shall be 2" larger diameter than outer pipe of flue.

D. Clearances: Maintain adequate clearance from combustible materials to prevent fire hazard. Provide thimble for pipe passing through combustible materials. Provide fiberglass insulation between outer pipe and roof jack to prevent heating roofing materials.

E. Sleeves: Provide airtight sleeves around all vents passing through ceiling cavity of plenum spaces, to prevent flue gases escaping into cavity space.

PART 3 - EXECUTION

3.1 All equipment shall be installed in accordance with the manufacturers recommendations and printed installation instructions.

3.2 All items required for a complete and proper installation are not necessarily indicated on the plans or in the specifications. Provide all items required as per manufacturers requirements.

END OF SECTION

SECTION 23 55 00 - FUEL FIRED UNIT HEATERS

PART 1 GENERAL

1.1 SECTION INCLUDES

A. Tubular infrared heaters.

1.2 PRODUCTS FURNISHED BUT NOT INSTALLED UNDER THIS SECTION

A. Section 23 09 00 - Building Automation and Controls System: Installation of thermostats and other controls components.

B. Section 26 09 00 - Miscellaneous Electrical Controls and Wiring: Installation and wiring of thermostats and other controls components.

1.3 RELATED SECTIONS

A. Section 23 05 13 - Common Motor Requirements for HVAC Equipment: Fan motors.

B. Section 23 05 48 - Vibration and Seismic Controls for HVAC Piping.

C. Section 23 07 13 - Duct Insulation: Duct Liner.

1.4 REFERENCES

A. ANSI/ASHRAE 103 - Heating Seasonal Efficiency of Central Furnaces and Boilers, Methods of Testing.

B. ANSI/NEMA MG 1 - Motors and Generators.

C. ANSI/NFPA 31 - Installation of Oil Burning Equipment.

D. ANSI/NFPA 90B - Installation of Warm Air Heating and Air Conditioning Systems.

E. ANSI/NFPA 211 - Chimneys, Fireplaces, Vents, and Solid Fuel Burning Appliances.

F. NFPA 90A - Installation of Air Conditioning and Ventilating Systems.

1.5 SUBMITTALS

A. Submit under provisions of Division 1.

B. Shop Drawings: Indicate assembly, required clearances, and location and size of field connections.

C. Product Data: Provide manufacturer's literature and data indicating rated capacities, weights, accessories, electrical nameplate data, and wiring diagrams.

D. Manufacturer's Installation Instructions: Indicate rigging, assembly, and installation instructions.

1.6 OPERATION AND MAINTENANCE DATA

A. Submit operation data under provisions of Division 1.

B. Include manufacturer's descriptive literature, operating instructions, maintenance and repair data, and parts listing.

1.7 WARRANTY

A. Provide five year warranty under provisions of Division 1.

B. Warranty: Include coverage for 10 year, non-prorated warranty for heat exchangers and draft diverters.

PART 2 - PRODUCTS

2.1 TUBULAR INFRARED HEATERS

A. Manufacturers:

1. Reznor.
2. Sterling.
3. Modine.

B. Units: Packaged, factory assembled, pre-wired unit consisting of cabinet, burner, heat exchanger, radiant tube, reflector, controls.

C. Refer to Schedule. Gas heating capacities are sea level ratings.

D. Cabinet: Galvanized steel with baked enamel finish.

E. Heat Exchanger: Aluminized steel combustion chamber with aluminized steel tube with aluminum reflector.

F. Gas Burner: Forced draft type with adjustable combustion air supply, combination gas valve and pressure regulator incorporating manual shut-off, pilot valve, automatic 100 percent shut-off and thermo-couple pilot safety device, electronic pilot ignition.

G. Gas Burner Safety Controls: Thermo-couple sensor prevents opening of solenoid gas valve until pilot flame is proven and stops gas flow on ignition failure.

H. Room Thermostat: Low voltage, to control burner operation.

PART 3 - EXECUTION

3.1 EXAMINATION

A. Verify that space is ready for installation of units and openings are as indicated on shop drawings.

B. Verify that proper power supply is available.

C. Verify that proper fuel supply is available for connection.

3.2 INSTALLATION

A. Install in accordance with manufacturer's instructions.

B. Install to NFPA 90A and ANSI/NFPA 90B.

C. Install gas fired units to ANSI Z223.1 (NFPA 54).

D. Install oil fired units to ANSI/NFPA 31.

E. Provide vent connections to ANSI/NFPA 211.

F. Install unit heaters with vibration isolation. Refer to Section 23 05 48

END OF SECTION

SECTION 23 62 13 - AIR COOLED CONDENSING UNITS

PART 1 - GENERAL

1.1 GENERAL REQUIREMENTS

A. The requirements of the General Conditions and Supplementary Conditions apply to all work herein.

B. Section 23 02 00 – Basic Materials and Methods is included as a part of this Section as though written in full in this document.

1.2 SCOPE

Scope of the Work shall include the furnishing and complete installation of the equipment covered by this Section, with all auxiliaries, ready for Owner's use.

1.3 OPERATIONS PERSONNEL TRAINING

A. Provide a training session for the owner’s operations personnel. Training session shall be performed by a qualified person who is knowledgeable in the subject system/equipment. Submit a training agenda two (2) weeks prior to the proposed training session for review and approval. Training session shall include at the minimum:

1. Purpose of equipment.
2. Principle of how the equipment works.
3. Important parts and assemblies.
4. How the equipment achieves its purpose and necessary operating conditions.
5. Most likely failure modes, causes and corrections.
6. On site demonstration.

PART 2 - PRODUCTS

2.1 AIR-COOLED CONDENSING UNITS

A. Air-cooled condensing unit shall be designed for use with split system having a remote direct-expansion (DX) cooling coil mounted in evaporator fan unit. Capacity shall be as called for on the Drawings when matched to the appropriate evaporator coil.

B. Condensing unit shall consist of high-efficiency hermetic compressor, air-cooled condenser with quiet fan, factory wired controls, R410A or R407C refrigerant and refrigeration circuit and valves.

C. Cabinet shall be heavy-gauge galvanized steel with bonding primer and baked-enamel finish coat. The entire cabinet shall be protected from rust.

D. Compressor shall be protected from excessive current and temperatures and shall be provided with a thermostatically controlled crankcase heater to operate only when needed for protection of the compressor. Compressor shall be spring-mounted on rubber isolators. Compressor shall be located in compartment isolated from condenser fan and coil. Provide a high-capacity dryer in the system to remove moisture and dirt.

E. Condenser fan shall be directly connected to a weather-protected, quiet, high-efficiency motor. Fan guard shall be provided and shall be protected from rust by PVC finish. Condenser coil shall be aluminum fin with copper tube.

F. Connections for refrigerant suction and liquid lines shall be extended outside the cabinet and provided with service valves with gauge connections.

G. Power connections shall be made to the connectors located inside the electrical connection box.

H. Standard operating and safety controls shall include high-pressure switch, low pressure switch, compressor overload service, and solid-state timed-off control.

I. All components (parts and labor) of the sealed refrigeration circuit shall be warranted by the manufacturer for five years.

2.2 AUXILIARY EQUIPMENT

A. Auxiliary equipment shall consist of refrigerant lines prepared for the unit involved. These lines shall be cleaned, dried, and pressurized at the factory.

B. Low ambient kit to allow operation at outside temperature below 35 deg. F (2 deg. C) shall be provided.

C. Expansion valve shall be provided with the evaporator coil.

D. Provide thermostat to match the requirements of the job. Thermostat shall provide subbase with Heat-Cool-Off and Fan On-Auto switch. See section on controls for other related requirements.

E. Provide polyethylene structural base designed for that service, and intended to support the unit and eliminate vibration transmission.

F. Provide hard-start kit with unit.

G. Provide guards for condenser coils.

2.3 ACCEPTABLE MANUFACTURERS

A. Condensing unit shall be the make and model number shown on the drawings or acceptable equivalents by Lennox, Carrier, York, Aaon or Daikin.

PART 3 - EXECUTION

3.1 All HVAC equipment shall be installed as per manufacturer's printed installation instructions.

3.2 All items required for a complete and proper installation are not necessarily indicated on the Drawings or in the Specifications. Provide all items required as per manufacturer's requirements.

3.3 INSTALLATION

A. Install the condensing unit on proper foundation as shown on the Drawings, and in location that will not restrict the air entry or discharge from the unit.

B. Install refrigerant lines as recommended by the manufacturer, taking care not to lose the refrigerant charge contained in the lines, or allow air to enter the lines or equipment. Locate the lines in such a way as to not obstruct access to the condensing unit or other equipment. Lines located underground or under concrete shall be installed in a PVC sleeve for protection.

C. Provide electrical connections as required by the applicable codes. Provide control wiring required. All power wiring and control wiring shall be in conduit and located so as not to obstruct access to the unit or other equipment.

3.4 TESTING

A. Operate the condensing unit and the system to assure that unit is operating properly and without excessive noise and vibration.

B. Read and record the power draw and the refrigeration suction and liquid pressures as required by Section 23 05 93 – Testing, Adjusting, and Balancing.

END OF SECTION

SECTION 23 81 26 - PACKAGED WALL MOUNTED AIR CONDITIONING UNIT

PART 1 - GENERAL

1.1 GENERAL REQUIREMENTS

A. The requirements of the General Conditions and Supplementary Conditions apply to all work herein.

B. Section 23 02 00 - Basic Materials and Methods is included as a part of this Section as though written in full in this document.

1.2 WORK INCLUDED

A. Wall mounted computer room air conditioning units with microprocessor based controls.

B. Outdoor remote mounted air cooled condensing units

C. The system shall have a total cooling capacity and a sensible cooling capacity as indicated in the Mechanical Schedules.

D. The unit is to be supplied for operation on a power supply as indicated in the Mechanical Schedules and the Electrical drawings.

1.3 RELATED SECTIONS

A. Section 23 02 00 – Basic Materials and Methods

B. Section 23 05 29 – Hangers and Support for Piping and Equipment HVAC

C. Section 23 05 13 – Common Motor Requirements for HVAC Equipment

D. Section 23 05 48 – Vibration and Seismic Controls for HVAC Piping and Equipment

E. Section 23 07 19 – HVAC Piping Insulation

F. Section 23 23 00 – Refrigerant Piping

G. Section 23 41 00 – Air Filters

H. Section 23 05 93 – Testing, Adjusting, and Balancing

I. Section 23 21 19 – Hydronic Specialties

J. Section 23 21 13 – Above Ground Hydronic Piping

1.4 QUALITY ASSURANCE

A. The specified system shall be factory-tested before shipment. Testing shall include, but shall not be limited to: Quality Control Checks, “Hi-Pot” Test (two times rated voltage plus 1000 volts, per NRTL agency requirements), and Metering Calibration Tests. The system shall be designed and manufactured according to world-class quality standards. The manufacturer shall be ISO 9001 certified.

B. System shall be supplied with CSA Certification to the harmonized U.S. and Canadian

product safety standard CSA C22.2 No 236/UL 1995 for “Heating and Cooling Equipment” and marked with the CSA c-us logo (60Hz only).

C. UL Compliance: Fans shall be designed, manufactured, and tested in accordance with UL 705 "Power Ventilators."

D. UL Compliance: Fans and components shall be UL listed and labeled.

E. Nationally Recognized Testing Laboratory Compliance (NRTL): Fans and components shall be NRTL listed and labeled. The term "NRTL" shall be as defined in OSHA Regulation 1910.7.

F. NEMA Compliance: Motors and electrical accessories shall comply with NEMA standards.

G. Electrical Component Standard: Components and installation shall comply with NFPA 70 "National Electrical Code."

H. Sound Power Level Ratings: Comply with AMCA Standard 301 "Method for Calculating Fan Sound Ratings From Laboratory Test Data." Test fans in accordance with AMCA Standard 300 "Test Code for Sound Rating." Fans shall be licensed to bear the AMCA Certified Sound Ratings Seal.

I. Fan Performance Ratings: Establish flow rate, pressure, power, air density, speed of rotation, and efficiency by factory tests and ratings in accordance with AMCA Standard 210/ASHRAE Standard 51 - Laboratory Methods of Testing Fans for Rating.

1.5 SUBMITTALS

A. General: Submit the following in accordance with Conditions of Contract and Division 1 Specification Sections:

B. Product data for selected models, including specialties, accessories, and the following:

1. Certified fan performance curves with system operating conditions indicated.
2. Certified fan sound power ratings.
3. Motor ratings and electrical characteristics plus motor and fan accessories.
4. Materials, gages and finishes, include color charts.

C. Shop drawings from manufacturer detailing equipment assemblies and indicating dimensions, weights, required clearances, components, and location and size of field connections.

D. Wiring diagrams that detail power, signal, and control wiring. Differentiate between manufacturer installed wiring and field installed wiring.

E. Product certificates, signed by manufacturer, certifying that their products comply with specified requirements.

F. Maintenance data for inclusion in Operating and Maintenance Manual specified in Division 1 and Division 23, Section "Basic Materials and Methods".

1.6 DELIVERY, STORAGE, AND HANDLING

A. Equipment shall be stored and handled in accordance with the unit manufacturer's instructions.

B. Lift and support units with the manufacturer's designated lifting or supporting points.

C. Disassemble and reassemble units as required for movement into the final location following manufacturer's written instructions.

D. Deliver units as a factory-assembled unit to the extent allowable by shipping limitations, with protective crating and covering.

1.7 ENVIRONMENTAL REQUIREMENTS

A. Do not operate units for any purpose, temporary or permanent, until filters are in place, bearings lubricated, refrigeration piping has been tested and charged and fan has been test run under observation.

1.8 OPERATIONS PERSONNEL TRAINING

A. Provide a training session for the owner's operations personnel. Training session shall be performed by a qualified person who is knowledgeable in the subject system/equipment. Submit a training agenda two (2) weeks prior to the proposed training session for review and approval. Training session shall include at the minimum:

1. Purpose of equipment.
2. Principle of how the equipment works.
3. Important parts and assemblies.
4. How the equipment achieves its purpose and necessary operating conditions.
5. Most likely failure modes, causes and corrections.
6. On site demonstration.

1.9 WARRANTY

A. Provide a manufacturer's warranty for two years from date of shipment from defects in material and workmanship when used in a proper and normal manner. Manufacturer shall have the option to repair or replace the defective part including material and labor.

B. Provide a five year compressor, motor, parts, labor and refrigerant warranty, effective for five years from date of factory start-up and certification.

PART 2 - PRODUCTS

2.1 FURNISH AND INSTALL

A. A one-piece wall-mounted, factory assembled, pre-charged, pre-wired, tested and ready to operate air conditioning unit. The unit shall be approved and listed by Underwriters' Laboratories, Inc. Unit performance shall be certified in accordance with Air Conditioning and Refrigeration Institute Standard 210/240-89 for Unitary Air-Source Air Conditioners or latest standard.

B. Approved Manufacturers:

1. Daikin
2. Mitsubishi
3. Liebert

2.2 AIR DISTRIBUTION

A. The air distribution system shall be constructed with a quiet, cross flow direct-drive fan assembly. The single fan motor shall be high-efficiency type, equipped with permanently lubricated bearings. The fan shall be capable of three speeds for airflow modulation (High, Med, Low) and Sleep. Dehumidification shall utilize the lower fan speed.

2.3 CABINET CONSTRUCTION

A. The cabinet shall be formed from high strength molded Acrylonitrile Butadiene Styrene (ABS) and High Impact Polystyrene (HIPS) with smooth finish, flat front panel design with access for filter. Cabinet color shall be white. The unit shall be wall mounted by means of a factory supplied, pre-drilled, mounting plate.

2.4 SERVICEABILITY

A. The cabinet shall be designed so all components are easily accessible for service and maintenance through either the front or rear of the unit. Units that are not fully accessible from front and rear or not serviceable in place shall be unacceptable.

2.5 FILTRATION

A. The filter shall be an integral part of the system, located within the cabinet and serviceable from the front. The filters shall be half-inch thick, washable, 3M Micro Protection filter.

2.6 MICROPROCESSOR CONTROL

A. The control system shall be microprocessor-based, factory-wired into the system and tested prior to shipment. The wall-mounted control enclosure shall be 4.75" x 4.75" and white in color with include a light-blue LCD providing continuous display of operating status and alarm condition. There shall be a built-in weekly schedule with up to 5 scheduled event settings per day.

B. A 5-key membrane keypad for setpoint/program control, increase/decrease temperature set point, fan speed selection and unit operation mode shall be located below the display. The controller shall have a built-in temperature sensor. Temperature shall be displayed in either Fahrenheit (°F) or Celsius (°C), and Temperature changes shall be by increments of ±3.6°F (±2°C).

C. The control display shall be field-wired to the control board using factory-supplied thermostat wire with plugs. The control voltage from the wired controller to the indoor unit shall be 12 volts, DC. Field wiring shall run directly from the indoor unit to the wall mounted controller with no splices. Communication cable can be extended to a maximum of 164 feet, between controller and indoor unit.

D. The control shall be able to be programmed for a temperature set point between 64-86°F (18-30°C) with a sensitivity of ±3.6°F (±2°C).

E. The control system shall prevent compressor short-cycling by a 3-minute timer from compressor stop to the next start.

F. For startup after power failure, the system shall provide automatic restart with a programmable (up to 9.9 minutes in 6-second increments) time delay. Programming can be performed at the wall mounted controller.

G. The control system shall monitor unit operation and activate a visual alarm in the event of an alarm condition.

2.7 OUTDOOR AIR-COOLED PROP FAN CONDENSING UNIT

A. Condensing unit components shall include a condenser coil, a brush-less digitally controlled variable propeller-type fan, an inverter driven twin rotary compressor, electronic expansion valve, 4-way reversing valve.

B. All components shall be factory-assembled, charged with R-410A refrigerant and sealed. No internal piping, brazing, dehydration or charging shall be required.

C. The condenser coil shall be constructed of copper tubes and aluminum fins.

D. The condensing unit shall be designed to operate at a sound level less than 57 dBA.

E. The casing shall be constructed from galvanized steel plate, finished with a white electrostatically applied, thermally fused acrylic or polyester powder coating for corrosion protection. Mounting feet shall be provided and shall be welded to the base of the cabinet and be of sufficient size to afford reliable equipment mount and stability. Easy access shall be afforded to all serviceable parts by means of removable panel sections. The fan grill shall be constructed of polypropylene.

F. The condensing unit shall be furnished with a single DC fan motor. The fan blade shall be of aerodynamic design for quiet operation, and the fan motor bearings shall be permanently lubricated. The outdoor unit shall have horizontal discharge airflow. The fan shall be mounted in front of the coil, pulling air across it from the rear and dispelling it through the front. The fan shall be provided with a raised guard to prevent external contact with moving parts.

G. The condensing unit coil shall be of copper tubing with louvered aluminum fins. The coil shall be protected with an integral metal guard. The coil shall be have an anti-corrosive coating designed to prevent natural surface corrosion of the aluminum fins, maintaining heat transfer properties of the coil and extending service life. Refrigerant flow from the condenser shall be controlled by means of an electronic expansion valve (EEV) metering device. The EEV shall be control by a microprocessor controlled step motor.

H. The compressor shall be a DC twin-rotor rotary compressor with Variable Speed Inverter Drive Technology. The compressor shall be driven by inverter circuit to control compressor speed. The compressor speed shall dynamically vary to match the room load for significantly increasing the efficiency of the system which shall result in significant energy savings. To prevent liquid from accumulating in the compressor during the off cycle, a minimal amount of current shall be automatically, intermittently applied to the compressor motor windings to maintain sufficient heat to vaporize any refrigerant. No crankcase heater is to be used. The outdoor unit shall have an accumulator and high-pressure safety switch. The compressor shall be mounted to avoid the transmission of vibration.

2.8 ACCESSORIES

A. The unit shall be provided with a wind baffle low ambient operation kit. The wind baffle shall be constructed on 20 gauge sheet metal and painted to prevent corrosion. Unit shall be able to provide 100% capacity when operating at 0ºF outdoor air temperature and a wind baffle is used.

B. The unit shall be provided with a cooling coil condensate pump. The condensate pump shall be complete with integral float switch, pump, motor assembly and reservoir.

PART 3 - EXECUTION

3.1 INSTALLATION OF AIR CONDITIONING UNIT

A. General

1. Install air conditioning unit in accordance with manufacturer's installation instructions. Install unit plumb and level, firmly anchored in location indicated, and maintain manufacturer’s recommended clearances.

B. Electrical Wiring

1. Install and connect electrical devices furnished by manufacturer but not specified to be factory-mounted. Furnish copy of manufacturer’s electrical connection diagram submittal to electrical contractor. Install and wire per local and national codes.

C. Piping Connections

1. Install and connect devices furnished by manufacturer but not specified to be factory-mounted. Furnish copy of manufacturer’s piping connection diagram submittal to piping contractor.

D. Supply and Drain Water Piping

1. Connect water supply and drains to air conditioning unit. Unit drain shall be trapped internally.

E. Field-Supplied Pan

1. A field-supplied pan with drain shall be installed beneath cooling units installed without air distribution plenum and beneath water/glycol condensing units.

3.2 FIELD QUALITY CONTROL

A. Startup air conditioning unit in accordance with manufacturer’s startup instructions. Test controls and demonstrate compliance with requirements. Provide system start-up services by manufacturer’s authorized service representative confirming all system equipment and components have been installed in accordance with the manufacturer’s written instructions. Provide formal report for engineer and owner review and approval.

END OF SECTION

SECTION 23 81 43 – VARIABLE REFRIGERANT FLOW (VRF) FOR HVAC SYSTEM

PART 1 – GENERAL

1.1 SYSTEM DESCRIPTION

The VRF (Variable Refrigerant Flow) system shall be capable of a simultaneous cooling and heating heat pump. The simultaneous heating and cooling VRF system shall consist of an outdoor unit, high efficiency heat recovery units designed for minimum piping and maximum design flexibility, indoor units, and controls by the equipment manufacturer. Every indoor unit shall be independently capable of operating in either heating or cooling mode regardless of the mode of other indoor units. The system shall be capable of changing mode of individual indoor units (cooling to heating or heating to cooling) within a maximum time of 5 minutes to ensure indoor temperature can be properly maintained.

1.2 QUALITY ASSURANCE

A. The units shall be listed by Electrical Test Laboratories (ETL) and bear the ETL label.

B. All wiring shall be in accordance with the National Electrical Code (N.E.C.).

C. The units shall be manufactured in a facility registered to ISO 9001 and ISO14001 which is a set of standards applying to environmental protection set by the International Standard Organization (ISO).

D. A full charge of R-410A for the condensing unit only shall be provided in the condensing unit.

E. System shall be composed of components which meet or exceed the 2010 Federal minimum efficiency requirements and the proposed ASHRAE 90.1 efficiency requirements for VRF systems. Efficiency shall be published in accordance with the DOE alternative test procedure, which is based on the Air-Conditioning, Heating, and Refrigeration Institute (AHRI) Standards 340/360, 1230 and ISO Standard 13256-1.

F. DELIVERY, STORAGE AND HANDLING

1. Unit shall be stored and handled according to the manufacturer's recommendation.

1.3 TRAINING

A. Contractor shall provide four (4) hours of onsite training for owners' representative on how to operate the VRF system including start/stop, scheduling and web interface.

PART 2 – WARRANTY

2.1 The units shall be covered by the manufacturer's limited warranty for a period of five (5) years from date of substantial completion.

The systems shall be:

1. Designed by a certified manufacturer designer.
2. Installed by a certified contractor that has successfully completed the manufacturer training courses.
3. verified with a completed commissioning report submitted to and approved by the

system manufacturer.

In addition, the compressor shall have a manufacturer's limited warranty for a period of seven (7) years from date of installation.

If, during this period, any part should fail to function properly due to defects in workmanship or material, it shall be replaced or repaired at the discretion of the manufacturer.

In addition, the contractor shall provide one (1) year parts and labor from the date of substantial completion.

2.2 Manufacturer shall have a minimum of ten (10) years of HVAC experience in the U.S. market.

2.3 All manufacturer technical and service manuals must be readily available for download by any local contractor should emergency service be required. Registering and sign-in requirements which may delay emergency service reference are not allowed.

2.4 The VRF system shall be installed by a contractor with extensive install and service training. The mandatory contractor service and install training should be performed by the manufacturer.

PART 3 – PRODUCTS

3.1 ACCEPTABLE MANUFACTURERS

A. Daikin

B. Mitsubishi

C. Note: Installing contractor is responsible for any costs incurred i.e. engineering design fee changes, electrical, structural, mechanical, etc. in using an acceptable manufacturer other than the basis of design

3.2 HEATING AND COOLING OUTDOOR UNIT

A. General:
1. The outdoor unit shall be used with VRF components of the same manufacturer consisting of the outdoor unit, high efficiency heat recovery units, indoor units, factory designed and supplied Y-branches, and controls.
2. System components shall be of the same manufacturer or as recommended by the manufacturer of the VRF equipment.
3. Unit control boards shall perform all functions required to effectively and efficiently operate the VRF system and communicate in a daisy chain configuration from outdoor unit to heat recovery and indoor units via RS485.
4. The outdoor unit shall be completely factory assembled, piped and wired. Dual and triple frame outdoor units will be field piped with factory designed and supplied Y-branch kits to manifold them together into a single refrigerant circuit.
5. Each outdoor unit shall be run tested at the factory.
6. The sum of connected nominal capacity of all indoor air handlers shall range from 50% to 130% of outdoor unit nominal capacity to ensure the VRF system will have sufficient capacity to handle the building space loads at peak design.
7. Outdoor unit shall have a tested sound rating no higher than 58 dB(A) per outdoor unit frame tested per KSA0701. The outdoor unit frame shall include three quiet/nighttime operation settings of 47, 44, and 41 dBA.
8. All refrigerant lines from the outdoor unit to the heat recovery unit and from the heat recovery unit to the indoor units shall be field insulated.
9. The outdoor unit shall have an accumulator.

10. The outdoor unit shall have a high pressure safety switch
11. The outdoor unit shall have over-current protection.
12. The outdoor unit shall use a brazed plate subcooling heat exchanger.
13. The outdoor unit shall have the ability to operate with an elevation difference of up to 328 feet above or below the indoor units.
14. The outdoor unit shall allow up to a total equivalent refrigerant piping length of 3280 feet.
15. The maximum length from outdoor unit to indoor unit shall be up to 656 feet without traps.
16. The outdoor unit shall be capable of operating in heating only mode down to -4°F and up to 61°F ambient wet bulb without additional low ambient controls.
17. The outdoor unit shall be capable of operating in cooling only mode down to 21°F and up to 110°F ambient dry bulb.
18. The outdoor unit shall be capable of operating in simultaneous heating and cooling mode down to 14°F and up to 86°F ambient dry bulb.
19. The outdoor unit shall have an oil separator for each compressor and controls to ensure sufficient oil supply is maintained for the compressor.
20. Shall use R410A refrigerant.
21. Each outdoor unit frame shall have a removable inspection panel no greater than 6 inches tall or 12 inches wide to allow access to service tool connection, DIP switches, auto addressing and error codes.

B. Frame:

1. Shall be constructed with galvanized steel, bonderized and be finished with powder coat baked enamel paint.

C. Compressor:

1. All 460V 3 phase outdoor unit frames greater than 80MBh nominal capacity shall be equipped with one hermetic digitally controlled inverter driven scroll compressor and one hermetic constant speed scroll compressor.
2. A crankcase heater shall be factory mounted on all compressors.
3. The outdoor unit compressor shall have an inverter to modulate capacity. The frequency of the inverter compressor shall be completely variable from 25 to 105Hz.
4. The compressor shall be equipped with an internal thermal overload.
5. The compressor shall be mounted to avoid the transmission of vibration.

D. Fan:

1. All outdoor unit frames shall be furnished with direct drive, variable speed propeller type fans.
2. All fan motors shall have inherent protection, have permanently lubricated bearings, and be variable speed with a maximum speed up to 950 rpm.
3. All fans shall be provided with a raised guard to limit contact with moving parts.
4. The outdoor unit shall have vertical discharge airflow.

E. Coil:

1. The outdoor coil shall be of nonferrous construction with louvered fins on copper tubing.
2. The coil fins shall have a factory applied corrosion resistant material with hydrophilic coating.
3. The coil shall be protected with an integral metal guard.
4. Refrigerant flow from the outdoor unit shall be controlled by means of a digitally

controlled inverter driven scroll compressor.

F. Electrical:

1. The outdoor unit electrical power shall be 460V/208, 60 Hz, 3 phase.
2. The outdoor unit shall be capable of operation within voltage limits of +/- 10% rated voltage.
3. The outdoor unit shall be controlled by integral microprocessors.
4. The control circuit between the indoor units, heat recovery box and the outdoor unit shall be 24VDC completed using a 2-conductor, stranded, shielded cable for the RS485 daisy chain communication.

3.3 HEAT RECOVERY UNITS FOR SIMULTANEOUS HEATING AND COOLING SYSTEMS

A. General:

1. Heat recovery units shall be designed for use with VRF equipment of the same manufacturer.
   a. Heat recovery units shall have factory installed control boards that interface to the VRF equipment controls system and shall perform all functions to effectively and efficiently control the simultaneous heating and cooling VRF system.
   b. Heat recovery units shall be completely factory assembled, internally piped and wired.
   c. Heat recovery units shall be run tested at the factory.
   d. Heat recovery units shall be designed for indoor installation.
   e. Shall use R410A refrigerant.
   f. All refrigerant lines from the outdoor unit to the indoor units shall be field insulated.
   g. Heat recovery units shall allow up to 2, 3, or 4 indoor units to be connected.
   h. Y-branches between heat recovery units and indoor units shall not be allowed to ensure independent heating and cooling control of each indoor unit regardless of the mode of any other indoor unit connected to that heat recovery unit.
   i. Heat recovery units shall be permitted to be piped in series or parallel to minimize material cost and labor.
   j. The following piping shall be allowed.
      i. Series piping of up to 16 heat recovery units
      ii. Indoor units up to 131 equivalent feet of piping length from the respective heat recovery unit
      iii. Indoor units up to 295 equivalent feet of piping length from the first branch
      iv. Indoor units shall not exceed 16 feet above or below the heat recovery unit
      v. Elevation difference between the highest and lowest elevation indoor unit shall not exceed 16 feet.
      vi. Total indoor unit nominal capacity shall not exceed 160MBh in any series string of 1 to 16 heat recovery units.

B. Heat Recovery Unit Construction:

1. The heat recovery unit shall have 2, 3, or 4 ports which can individually accommodate up to one indoor unit not to exceed 48.1 MBh nominal capacity.
   a. Indoor units greater than 48.1 MBh nominal capacity shall utilize 2 neighboring heat recovery unit ports.
2. The heat recovery unit housing shall be galvanized steel.

3. Each heat recovery unit shall contain piping, valves and controls to divert refrigerant for optimum efficiency.
4. The unit shall house one double spiral tube-in-tube heat exchanger per port of the heat recovery unit.
5. Heat recovery units shall be internally insulated and not require installation of any condensate drain.

C. Refrigerant System

1. R410A refrigerant shall be required for all VRF equipment and components including indoor units, outdoor units, refrigerant piping, valves, Y-branches, heat recovery units, etc. as applicable.

D. Refrigerant valves:

1. Each port shall be circuited with two 2-position solenoid valves to control refrigerant flow path.
2. Isolation valves shall be field supplied and installed for ease of service to the heat recovery unit without evacuating the entire system refrigerant charge.
   a. Shall be designed for use with R410A

E. Electrical:

1. The heat recovery box electrical power shall be 208/230V, 1 phase, 60 Hz.
2. All units shall be capable of satisfactory operation within +/-10% of nominal voltage.
3. The heat recovery unit shall be controlled by integral microprocessors from the main control in the outdoor unit.
4. The control circuit between the indoor units, heat recovery box and the outdoor unit shall be 24VDC completed using a 2-conductor, stranded and shielded cable for the RS485 daisy chain communication.

3.4 CEILING-CONCEALED DUCTED INDOOR UNIT

A. General:
The unit shall be a ceiling-concealed ducted indoor fan coil design that mounts above the ceiling with a 2-position, field adjustable return and a fixed horizontal discharge supply and shall have a modulating linear expansion device. The unit shall be used with the outdoor unit and BC (Branch Circuit) Controller, or outdoor unit. The unit shall support individual control using DDC controllers.

B. Indoor Unit.
The indoor unit shall be factory assembled, wired and run tested. Contained within the unit shall be all factory wiring, piping, electronic modulating linear expansion device, control circuit board and fan motor. The unit shall have a self-diagnostic function, 3-minute time delay mechanism, and an auto restart function. Indoor unit and refrigerant pipes shall be charged with dehydrated air before shipment from the factory.

C. Unit Cabinet:
1. The unit shall be, ceiling-concealed, ducted.
2. The cabinet panel shall have provisions for a field installed filtered outside air intake.

D. Fan:
1. The unit shall feature external static pressure settings from 0.14 to 0.60 in. WG.
2. The indoor unit fan shall be an assembly with one or two fan(s) direct driven by a single motor.
3. The indoor fan shall be statically and dynamically balanced and run on a motor

with permanently lubricated bearings.
4. The indoor fan shall consist of three (3) speeds, High, Mid, and Low plus the Auto-Fan function
5. The indoor unit shall have a ducted air outlet system and ducted return air system.

E. Filter:

1. Return air shall be filtered by means of a standard factory installed return air filter.
2. Return filter box (rear placement) with high-efficiency filter shall be provided for all indoor units.

F. Coil:

1. The indoor coil shall be of nonferrous construction with smooth plate fins on copper tubing.
2. The tubing shall have inner grooves for high efficiency heat exchange.
3. All tube joints shall be brazed with phos-copper or silver alloy.
4. The coils shall be pressure tested at the factory.
5. A condensate pan and drain shall be provided under the coil.
6. The condensate shall be gravity drained from the fan coil.
7. Both refrigerant lines to the indoor units shall be insulated.

G. Electrical:

1. The unit electrical power shall be 208/230 volts, 1-phase, 60 hertz.
2. The system shall be capable of satisfactory operation within voltage limits of 187-228 volts (208V/60Hz) or 207-253 volts (230V/60Hz).

3.5 4-WAY CEILING-RECESSED CASSETTE WITH GRILLE INDOOR UNIT

A. General

1. The unit shall be a four-way cassette style indoor unit that recesses into the ceiling with a ceiling grille. The indoor unit shall be factory assembled, wired and run tested. Contained within the unit shall be all factory wiring, piping, electronic modulating linear expansion device, control circuit board and fan motor. The unit shall have a self-diagnostic function, 3-minute time delay mechanism, an auto restart function, an emergency operation function, a test run switch, and the ability to adjust airflow patterns for different ceiling heights. Indoor unit and refrigerant pipes shall be charged with dehydrated air before shipment from the factory.

B. Unit Cabinet:

1. The cabinet shall be space-saving ceiling-recessed cassette.
2. The cabinet panel shall have provisions for a field installed filtered outside air intake.
3. Branch ducting shall be allowed from cabinet.
4. Four-way grille shall be fixed to bottom of cabinet allowing two, three or four-way blow.
5. The grille vane angles shall be individually adjustable from the wired remote controller to customize the airflow pattern for the conditioned space

C. Fan:

1. The indoor fan shall be an assembly with a turbo fan direct driven by a single motor.
2. The indoor fan shall be statically and dynamically balanced to run on a motor with permanently lubricated bearings.
3. The indoor fan shall consist of five (5) speed settings, Low, Mid1, Mid2, High and

Auto.

4. The fan shall have a selectable Auto fan setting that will adjust the fan speed based on the difference between controller set-point and space temperature.
5. The indoor unit shall have an adjustable air outlet system offering 4-way airflow, 3-way airflow, or 2-way airflow.
6. The indoor unit shall have switches that can be set to provide optimum airflow based on ceiling height and number of outlets used.
7. The indoor unit vanes shall have 5 fixed positions and a swing feature that shall be capable of automatically swinging the vanes up and down for uniform air distribution.
8. The vanes shall have an Auto-Wave selectable option in the heating mode that shall randomly cycle the vanes up and down to evenly heat the space.
9. If specified, the grille shall have an optional i-see sensor that will measure room temperature variations and adjust the airflow accordingly to evenly condition the space.

D. Filter:

1. Return air shall be filtered by means of a long-life washable filter

E. Coil:

1. The indoor coil shall be of nonferrous construction with smooth plate fins on copper tubing.
2. The tubing shall have inner grooves for high efficiency heat exchange.
3. All tube joints shall be brazed with phos-copper or silver alloy.
4. The coils shall be pressure tested at the factory.
5. A condensate pan and drain shall be provided under the coil.
6. The unit shall be provided with an integral condensate lift mechanism that will be able to raise drain water 33 inches above the condensate pan.
7. Both refrigerant lines to the indoor units shall be insulated.

F. Electrical:

1. The unit electrical power shall be 208/230 volts, 1-phase, 60 hertz.
2. The system shall be capable of satisfactory operation within voltage limits of 187-228 volts (208V/60Hz) or 207-253 volts (230V/60Hz).

PART 4 – CONTROLS

4.1 Overview

A. General:
The Controls Network shall be capable of supporting remote controllers, centralized controllers, an integrated web based interface, graphical user workstation, and system integration to Building Management Systems via BACnet® .

4.2 Electrical Characteristics

A. General:
The Controls Network shall operate at 30VDC. Controller power and communications shall be via a common non-polar communications bus.

B. Wiring:

1. Control wiring shall be installed in a daisy chain configuration from indoor unit to indoor unit, to the BC controller (main and subs, if applicable) and to the outdoor unit. Control

wiring to remote controllers shall be run from the indoor unit terminal block to the controller associated with that unit.

2. Control wiring for the remote controller shall be from the remote controller to the first associated indoor unit connection. The remote controller shall be assigned a unit address.

3. Control wiring for the controllers shall be from the remote controller (receiver) to the first associated indoor unit then to the remaining associated indoor units in a daisy chain configuration.

4. Control wiring for centralized controllers shall be installed in a daisy chain configuration from outdoor unit to outdoor unit, to the system controllers (centralized controllers and/or integrated web based interface), to the power supply.

5. The centralized controller shall be capable of being networked with other centralized controllers for centralized control.

B. Wiring type:

1. Wiring shall be 2-conductor (16 AWG), twisted, stranded, shielded wire as defined by the Diamond System Builder output.

2. Network wiring shall be CAT-5 with RJ-45 connection.

4.3 Controls Network

The Controls Network consists of remote controllers, centralized controllers, and/or integrated web based interface communicating over a high-speed communication bus. The Controls Network shall support operation monitoring, scheduling, occupancy, error email distribution, personal web browsers, tenant billing and online maintenance support. Control network shall be capable of integration with Building Management Systems (BMS) using BACnet® interface.

4.4 Remote Controllers

A. Remote Controller

The Remote Controller shall be capable of controlling up to 16 indoor units (defined as 1 group). The Remote Controller shall be approximately 5.5” x 5” in size and white in color with an auto-timeout touch screen LCD display. The Remote Controller shall support a selection from multiple languages (English, Spanish or French) for display information. The controller supports temperature display selection of Fahrenheit or Celsius. The Remote Controller shall control the following grouped operations: On/Off, Operation Mode (cool, heat, auto*, dry, fan and setback), temperature set point, fan speed setting, and airflow direction setting. The Remote Controller shall support timer settings of on/off/temperature up to 8 times in a day in 5-minute increments. The Remote Controller shall support an Auto Off timer. The Remote Controller shall be able to limit the set temperature range from the Remote Controller. Also, the temperature range can be set from a touch screen panel. The room temperature shall be sensed at either the Remote Controller or the Indoor Unit dependent on the indoor unit dipswitch setting. The Remote Controller shall display a four-digit error code in the event of system abnormality or error.

The Remote Controller shall only be used in same group with other Remote Controllers with a maximum of two Remote Controllers per group.

The Remote Controller shall require manual addressing using rotary dial switch to the communication bus. The Remote Controller shall connect using two-wire, stranded, non-polar control wire to TB5 connection terminal on the indoor unit.

(Remote Controller)			
Item	Description	Operation	Display
ON/OFF	Run and stop operation for a single group	Each Group	Each Group
Backlight	Turns on when screen is touched. Timeout duration is adjustable.	Each Group	Each Group
Operation Mode	Switches between Cool/Dry/Auto/Fan/Heat/Setback. Operation modes vary depending on the air conditioner unit. Auto and Setback mode are available for the R2/WR2-Series only.	Each Group	Each Group
Temperature Setting	Sets the temperature from 40°F – 95°F depending on operation mode and indoor unit. Separate COOL and HEAT mode set points available depending on central controller and connected mechanical equipment.	Each Group	Each Group
Fan Speed Setting	Available fan speed settings depending on indoor unit.	Each Group	Each Group
Air Flow Direction Setting	Air flow direction settings vary depending on the indoor unit model.	Each Group	Each Group
Room Temp and Humidity Display	Displays the room temperature and humidity on the Home screen. Temperature and Humidity sensed can be calibrated using the sensor offset in 1 °F or 1% RH increments.	N/A	Each Group
Occupancy Sensor	Detects occupancy using an infrared motion sensor. Occupancy status is indicated on the remote controller and through the web interface depending on connected equipment. Sensitivity is adjustable.	N/A	Each Group
Brightness Sensor	Detects brightness in the space and indicates brightness on the remote controller and through the web browser interface depending on connected equipment. Sensitivity is adjustable.	N/A	Each Group
Status Monitor	Displays the status of general equipment control points connected to the Advanced HVAC Controller (DC-A2IO)	N/A	Each Group
Humidity Setting	Sets the relative humidity set point in 1% increments for any humidifier connected to the Advanced HVAC Controller (DC-A2IO)	Each Group	Each Group
LED Indicator	Can be set to indicate the operation status by lighting and flashing with different colors and brightness or by turning off to signal operation mode, stopped unit, error, occupancy, or home screen button pushes. Color can be set to indicate the current mode selected or room temp range being sensed. *Available colors include blue, light blue, yellow, white, green, red, and lime.	Each Group	Each Group
Schedule	Set up to 8 operations per day, 7 days per week. Operations include time on/off, mode and room temperature set point.	Each Group	Each Group
Permit / Prohibit Local Operation	Individually prohibit operation of each local remote control function (Start/Stop, Change operation mode, Set temperature, Fan Speed, Air Direction, Reset filter). *1: Operation icon lights up on the remote controller for prohibited functions.	N/A	Each Group *1

(Remote Controller)			
Item	Description	Operation	Display
Energy-Save control during vacancy	When vacancy is detected by the occupancy sensor 5 control options are available for selection: Stop/Setback Mode/Set Temperature Offset/Low Fan Speed/Thermo-off Brightness sensor can be used in conjunction with the occupancy sensor to increase accuracy.	Each Group	Each Group
Error	When an error is currently occurring on an air conditioner unit, the afflicted unit and the error code are displayed	N/A	Each Unit
Test Run	Operates air conditioner units in test run mode.	Each Group	Each Group
Ventilation Equipment	Up to 16 indoor units can be connected to an interlocked system that has one LOSSNAY unit. LOSSNAY items that can be set are “Hi”, “Low”, and “Stop”. Ventilation mode switching is not available.	Each Group	Each Group
Set Temperature Range Limit	Set temperature range limit for auto, cool (drying) and heat modes.	Each Group	Each Group
Operation Lock Out Function	Locking of ON/OFF, Mode, Set Temp, Hold button and Air Direction.	Each Group	Each Group
Password	User and Service password protections are available	Each Group	N/A
Hold	Hold Prohibits the scheduled operation from being executed a. ON/OFF timer b. Auto-OFF timer c. Weekly timer d. Automatic return to the preset temperature * While an operation is prohibited by Hold function, the operation icon lights up.	Each Group	Each Group

Centralized Controller (Web-enabled)

4.5 Centralized Controller

A. The Centralized Controller shall be capable of controlling a maximum of 50 indoor units across multiple outdoor units. The Centralized Controller shall be approximately 8-1/2”x10” in size and shall be powered from the external power supply. The Centralized Controller shall support system configuration, daily/weekly scheduling, monitoring of operation status, night setback settings, free contact interlock configuration and malfunction monitoring. The Centralized Controller shall have five basic operation controls which can be applied to an individual indoor unit, a group of indoor units (up to 50 indoor units), or all indoor units (collective batch operation). This basic set of operation controls for the Centralized Controller shall include on/off, operation mode selection (cool, heat, auto), dry, setback and fan), temperature setting, fan speed setting, and airflow direction setting. Since the controller provides centralized control it shall be able to enable or disable operation of local remote controllers. In terms of scheduling, the Centralized Controller shall allow the user to define both daily and weekly schedules with operations consisting of ON/OFF, mode selection, temperature setting, air flow (vane) direction, fan speed, and permit/prohibit of remote controllers.

(Centralized Controller)			
Item	Description	Operation	Display
ON/OFF	Run and stop operation.	Each Block, Group or Collective	Each Group or Collective
Operation Mode	Indoor unit modes: COOL/DRY/FAN/AUTO/HEAT/SETBACK. Heat Recovery unit modes: HEAT RECOVERY/BYPASS/AUTO	Each Block, Group or Collective	Each Group
Temperature Setting	Sets the temperature from 40°F – 95°F depending on operation mode and indoor unit model. Separate COOL and HEAT mode set points available depending on remote controller and connected mechanical equipment.	Each Block, Group or Collective	Each Group
Set Temperature Range Limit	The range of room temperature setting can be limited by the initial setting depending on the indoor unit connected.	Each Group	Each Group
Fan Speed Setting	Available fan speed settings depend on indoor unit model.	Each Block, Group or Collective	Each Group
Air Flow Direction Setting	*Air flow direction settings vary depending on the indoor unit model. *1. Louver cannot be set.	*1 Each Block, Group or Collective	Each Group
Schedule Operation	Annual/weekly/today schedule can be set for each group of air conditioning units. Optimized start setting is also available. *2. The system follows either the current day, annual schedule, or weekly, which are in the descending order of overriding priority. Twenty-four events can scheduled per day, including ON/OFF, Mode, Temperature Setting, Air Direction, Fan Speed and Operation Prohibition. Five types of weekly schedule (seasonal) can be set. Settable items depend on the functions that a given air conditioning unit supports.	*2 Each Block, Group or Collective	Each Group
Hold	Disables scheduled functions for indoor unit groups and their associated remote controller timers. *not available for general equipment	Each Block, Group or Collective	Each Group
Optimized Start	Unit starts 5 - 60 minutes before the scheduled time based on the operation data history in order to reach the scheduled temperature at the scheduled time.	Each Block, Group or Collective	Each Block, Group or Collective
Night Setback Setting	The function helps keep the indoor temperature in the temperature range while the units are stopped and during the time this function is effective.	Each Group	Each Group

(Centralized Controller)			
Item	Description	Operation	Display
Permit / Prohibit Local Operation	Individually prohibit operation of each local remote control function (Start/Stop, Change operation mode, Set temperature, Fan Speed, Air Direction and Reset filter). *3. Centrally Controlled is displayed on the remote controller for prohibited functions.	Each Block, Group or Collective	*3 Each Group
Room Temp	Displays the room temperature of the group.	N/A	Each Group
Room Humidity	Displays the percent relative humidity in the space as sensed by the Smart ME Remote Controller	N/A	Each Group
Occupancy Sensor	Displays the occupancy icon on the group icon in the condition list page when the room is occupied (blue) or vacant (gray). *The Remote Controller Occupancy sensor is required.	N/A	Each Group
Brightness Sensor	Displays the brightness icon on the group icon in the condition list when the space is determined to be bright (yellow) or dark (gray). *The Remote Controller Brightness sensor is required.	N/A	Each Group
Error	When an error is currently occurring on an air conditioner unit, the afflicted unit and the error code are displayed *4. When an error occurs, the LED flashes. The operation monitor screen shows the abnormal unit by flashing it. The error monitor screen shows the abnormal unit address, error code and source of detection. The error log monitor screen shows the time and date, the abnormal unit address, error code and source of detection	N/A	*4 Each Unit or Collective
Ventilation Equipment	This interlocked system settings can be performed by the master system controller. When setting the interlocked system, use the ventilation switch the free plan Heat Recovery Units settings between “Hi”, “Low” and “Stop”. When setting a group of only free plan Heat Recovery Units, you can switch between “Normal ventilation”, “Interchange ventilation” and “Automatic ventilation”.	Each Group	Each Group
Multiple Language	Other than English, the following language can be chosen. Spanish, French, Japanese, German, Italian, Russian, Chinese, and Portuguese are available.	N/A	N/A
External Input / Output	By using accessory cables you can set and monitor the following. Input: By level: “Batch start/stop”, “Batch emergency stop”; By pulse: “batch start/stop”, “Enable/disable remote controller” Output: “start/stop”, “error/Normal”	*5 Collective	*5 Collective
Collective ON/OFF	All the units can be operated / stopped with a DIP switch.	Collective	N/A
Measurement	Displays the Temperature and Humidity inputs of the AI Board. Supports graph display and data export.	N/A	Each Unit

(Centralized Controller)			
Item	Description	Operation	Display
Status	Displays the status of the of the inputs and outputs of each Advanced HVAC Controller	N/A	Each Unit
Free Contact Status	Displays the input/output status of the Free Contacts on the indoor units	N/A	Each Unit
Free Contact Interlock Control	Operation of indoor groups, general equipment or free contact outputs based on group(s) conditions or free contact(s) input states.	Each Group, Output or Collective	N/A
Data Back-up (PC)	Initial setting data can be exported to a PC.	Collective	N/A

A. All Centralized Controllers shall be equipped with one RJ-45 Ethernet port to support interconnection with a network PC via a closed/direct Local Area Network (LAN).The Centralized Controller shall be capable of performing initial settings via a PC using the Centralized Controller's initial setting browser.

B. Standard software functions shall be available so that the building manager can securely log into each controller via the PC's web browser to support operation monitoring, scheduling, error email, interlocking and online maintenance diagnostics. Standard software functions shall not expire. Additional optional software functions of personal browser for PCs and MACs and Tenant Billing shall be available. The Tennant Billing function shall require Integrated System software in conjunction with Centralized Controllers.

4.6 Tenant Billing (SW-Charge):

A. The controls shall be capable of calculating energy usage in kWh and in a monetary amount based on the energy consumption of the outdoor unit(s) divided among the associated indoor units. This software is used in conjunction with the a networked PC, and Watt Hour Meters (WHM).

4.7 BACnet® Interface:

A. The BACnet® interface, shall be compliant with BACnet® Protocol (ANSI/ASHRAE 135-2004) and be Certified by the (BTL) BACnet® Testing Laboratories. The BACnet® interface shall support BACnet Broadcast Management (BBMD). The BACnet® interface shall support a maximum of 50 indoor units. Operation and monitoring points include, but are not limited to, on/off, operation mode, fan speed, prohibit remote controller, filter sign reset, alarm state, error code, and error address. The power supply shall supply 24VDC for the centralized controller and 30VDC voltage for the central control transmission.

4.8 Web based Interface:

A. Static IP address shall be provided by Owner's IT contractor for web based interface.

4.9 SEQUENCE OF OPERATION

1. Indoor Unit Sequence of Operations:

A. On/Off Control: the indoor units can be commanded ON/OFF either by a schedule in the Central Controller, at the Remote Controller, or by the BMS. If all indoor units are off, the

outdoor unit shall turn off. With the Night Setback Function/Mode, the system shall cycle on during unoccupied periods as needed to maintain unoccupied temperature set point.

B. Space Temperature Control: the indoor unit shall modulate its internal linear expansion valve (LEV) to maintain the temperature set point via the indoor unit's internal controls.
   1. The set point is adjustable at the remote controller, central controller, or through a BMS interface. The temperature set point can also be scheduled at the remote controller or the central controller.

C. Mode Control:
   1. Auto Mode:
   - NOTE: only available on indoor units connected to the R2/WR2-Series system.
      a. The indoor unit shall determine whether it should be in auto-heat mode or auto-cool mode based on space temperature relative to temperature set point. If the indoor unit is in auto heat mode, the indoor unit control board shall follow the heat mode sequence. If the indoor unit is in auto cool mode, the indoor unit control board shall follow the cool mode sequence.
      b. The indoor unit shall switch from AutoHeat to AutoCool when the space temperature rises above and remains above the temperature set point plus the dead band for 3 minutes.
      c. The indoor unit will switch from AutoCool to AutoHeat when the space temperature drops below and remains below the temperature set point minus the dead band for 3 minutes.
   2. Heating Mode: the indoor unit shall modulate its linear expansion valve (LEV) to maintain temperature set point.
   3. Cooling Mode: the indoor unit shall modulate its linear expansion valve (LEV) to maintain temperature set point.

D. Fan/Vane Control: fan speed and vane direction (if applicable) shall be adjustable by the user at the remote controller and/or the central controller.

2. Outdoor Unit Heating / Cooling Changeover Sequence of Operations:

E. The outdoor unit changes between heating and cooling if all of the indoor units change to the same mode. The VRF CONTROLS NETWORK shall be used to determine system change-over by one of the following methods:

1. No Central Controller:

   a. Option 1: a representative zone can be selected manually through a DIP switch on the outdoor unit which will allow the system mode to be selected by lowest control (communication bus) addressed indoor unit. The representative zone must be a single unit zone.

2. With Central Controller:

   a. Option 1: Scheduling: indoor units can be scheduled to the same mode using the central controller scheduling feature.
   b. Option 2: Representative Zone: the user can select a representative zone through the web or touch screen interface. When the mode for the representative zone is changed, all the other zones will be set to the same mode. The representative zone must be a single unit zone.
   c. Option 3: Averaging: the central controller polls the system for overall heating/cooling demand. Average demand is calculated based on the indoor unit's capacities and individual temperature set point deviation. A HEAT or COOL mode is set based on the calculation and all zones

connected to this system shall control space temperature in that mode or go into a “Standby Mode.”

1. Pre-treatment Outside Air Unit

F. OAHU unit shall be interlocked to operate when any of the associated fan coil unit is energized. Unit controls shall modulate stages of cooling to maintain 55°F (adj) leaving air temperature.

1. Miscellaneous controls:

G. Exhaust fans: Fans shall be interlocked with the respective VRF system for the same operation schedule. Refer to floor plans for other exhaust fans control

H. Humidity control: The VRF system shall have the capability to be scheduled in DRY mode to control the building humidity. In addition, any room with humidistat as shown on plans shall go into DRY mode when humidity level rises above 60% (adjustable) to minimize air flow and maximize coil cooling capacity.

I. Averaging temperature control shall be used for indoor units provided with two or more thermostat as shown on plans.

J. Refer to floor plans for other controls requirements.

PART 5 – EXECUTION

5.1 INSTALLATION

A. General:
Rig and install in full accordance with manufacturer’s requirements, project drawings, and contract documents. Refer to the manufacturer’s installation manual for full requirements.

B. Location:
Locate indoor and outdoor units as indicated on drawings. Provide service clearance per manufacturer’s installation manual. Adjust and level outdoor units on support structure.

C. Installation Requirements:

1. Installing contractor shall provide and install all accessories and piping for a fully operational system. Refer to manufacturer’s installation manual for full instructions.

2. Traps, filter driers, and sight glasses are NOT to be installed on the refrigerant piping or condensate lines.

3. The maximum operation pressure of R410A air conditioner is 4.30 MPa; 623psi. The refrigerant piping should ensure the safety under the maximum operation pressure. Refer to manufacturer’s recommended piping specifications. Pipes of radical thickness 0.7mm or less shall not be used.

4. No flared fittings shall be installed.
5. Utilize only brazed joints on all piping.
6. Utilize only hard drawn ACR refrigerant piping with ACR fittings rated for use with R410A for installation of system.
7. Piping system shall be leak tested to 550 psig prior to acceptance of system.
8. Braze only with non-oxide brazing material. Contractor shall perform brazing with nitrogen purge.
9. Braze with 15% Silver rods.
10. Isolations valves to be VRF ODS x ODS ball valves with charging port access.
11. Contractor shall ensure proper maintenance access for all unit components, filters, valves, motors, and control/electrical panels.
12. Insulation:

    Refrigerant lines, as well as any valves, shall be insulated end to end per specification.
13. Electrical:

    Installing contractor shall coordinate electrical requirements and connections for all power feeds with electrical contractor. Refer to Division 26 for additional information.

END OF SECTION

SECTION 23 82 19 - FAN COIL UNIT

PART 1 - GENERAL

1.1 GENERAL REQUIREMENTS

A. The requirements of the General Conditions and Supplementary Conditions apply to all work herein.

B. Section 23 02 00 - Basic Materials and Methods is included as a part of this Section as though written in full in this document.

1.2 SCOPE

Scope of the Work shall include the furnishing and complete installation of the equipment covered by this Section, with all auxiliaries, ready for owner's use.

1.3 OPERATIONS PERSONNEL TRAINING

A. Provide a training session for the owner’s operations personnel. Training session shall be performed by a qualified person who is knowledgeable in the subject system/equipment. Submit a training agenda two (2) weeks prior to the proposed training session for review and approval. Training session shall include at the minimum:

1. Purpose of equipment.
2. Principle of how the equipment works.
3. Important parts and assemblies.
4. How the equipment achieves its purpose and necessary operating conditions.
5. Most likely failure modes, causes and corrections.
6. On site demonstration.

PART 2 - PRODUCTS

2.1 FAN COIL UNITS

Fan coil units shall be factory built, manufactured as scheduled on Drawings. Lennox, Carrier, York, Aaon or Daikin shall be considered as equal, if they comply with the specifications and schedule. Special Note: Contractor shall field verify exact clearances required for fan coil units. Units shall be field located as required and shop drawings shall indicate final location for approval by Architect/Engineer.

A. Furnish and install fan coil units of the type, capacities, ratings and drive motor horsepower shown on the Drawings.

B. Units shall be factory fabricated, draw-thru type, and shall have fan section, cooling coil section, condensate drain pan, adjustable blower drive with motor on resilient mounted base, vee-belts with guard, filter section, and mixing box (if scheduled) assembled as integrated fan coil units.

C. REQUIREMENTS:

1. Mill-galvanized steel, rigidly framed, braced, and reinforced; access panels each side of unit; minimum panel ga. - 18; minimum weight formed framing member 14 ga.
2. Fan section, cooling coil section, and outlet frame throats shall be internally insulated at the factory with 1" thick, 3/4 PCF density, Neoprene coated

fiberglass cemented in place with waterproof adhesive, having fire-retardant characteristics in accordance with NFPA 90A.

3. Drain pan shall not be lighter than 14 ga.; extend completely under the coil section and be all-galvanized, foam insulated pan with drain connections.
4. When the fan coil unit is installed above an accessible ceiling, the unit shall incorporate a secondary drain pan. The secondary pan shall be fabricated from galvanized sheet metal, 16 gauge minimum with cross breaking sloped towards a drain. The sides shall be a minimum 2" tall and the corners shall be soldered watertight. The top edge shall have a 1/4" hem to provide additional rigidity and the secondary pan shall be supported at a minimum of six points. The pan shall extend on all sides a minimum of 3" beyond the sides of the unit casing. Route the secondary drain piping to a conspicuous location, or install a float switch at the low point in the secondary pan. The secondary pan should be sloped a minimum of 1/8" per foot and supported so that the unit is not in contact with the bottom of the secondary pan.
5. The fan section, including wheels, shafts, bearings, drive, etc., shall be statically and dynamically balanced as an assembly, and the shaft shall not pass through the first critical speed, while accelerating from rest to operating speed. Submittal data shall state the first critical shaft speed. Shaft bearings shall be of vacuum de-gassed steel, and shall be selected for 200,000 hours average life.
6. Coil shall be as hereinafter specified.

2.2 COILS

A. Cooling coils shall be cartridge type and, when mounted in fan coil units, shall be removable from either end. Coils shall be constructed of copper tubes with aluminum fins and shall be designed for even distribution of air across the face of the coils; air shall not pass around coil frames: Coils shall have same end connection for DX or chilled water piping.

B. DX refrigerant coils shall be counter-flow refrigerant to air; shall have inlet and outlet connections permanently marked; shall have thermostatic expansion valves with adjustable super heat.

C. Maximum face velocity across cooling coils shall be 500 FPM, unless noted otherwise on schedule.

PART 3 - EXECUTION

3.1 All HVAC equipment shall be installed as per manufacturers printed installation instructions.

3.2 All items required for a complete and proper installation are not necessarily indicated on the Drawings or in the Specifications. Provide all items required as per manufacturer's requirements.

END OF SECTION

SECTION 26 02 00 - BASIC MATERIALS AND METHODS

PART 1 - GENERAL

1.01 GENERAL REQUIREMENTS

A. The requirements of the General Conditions and Supplementary Conditions apply to all Work herein.

B. The Contract Drawings indicate the extent and general arrangement of the systems. If any departure from the Contract Drawings are deemed necessary by the Contractor, details of such departures and the reasons therefore, shall be submitted to the Architect for approval as soon as practicable. No such departures shall be made without the prior written approval of the Architect.

1.02 SCOPE OF WORK

A. The Work included under this Contract consists of the furnishing and installation of all equipment and material necessary and required to form the complete and functioning systems in all of its various phases, all as shown on the accompanying Drawings and/or described in these Specifications. The contractor shall review all pertinent drawings, including those of other contracts prior to commencement of Work.

B. This Division requires the furnishing and installing of all items Specified herein, indicated on the Drawings or reasonably inferred as necessary for safe and proper operation; including every article, device or accessory (whether or not specifically called for by item) reasonably necessary to facilitate each system's functioning as indicated by the design and the equipment specified. Elements of the work include, but are not limited to, materials, labor, supervision, transportation, storage, equipment, utilities, all required permits, licenses and inspections. All work performed under this Section shall be in accordance with the Project Manual, Drawings and Specifications and is subject to the terms and conditions of the Contract.

C. The approximate locations of Electrical items are indicated on the Drawings. These Drawings are not intended to give complete and accurate details in regard to location of outlets, apparatus, etc. Exact locations are to be determined by actual measurements at the building, and will in all cases be subject to the Review of the Owner or Engineer, who reserves the right to make any reasonable changes in the locations indicated without additional cost to the Owner.

D. Items specifically mentioned in the Specifications but not shown on the Drawings and/or items shown on Drawings but not specifically mentioned in the Specifications shall be installed by the Contractor under the appropriate section of work as if they were both specified and shown.

E. All discrepancies within the Contract Documents, or discrepancies between the Contract Documents and actual job-site conditions shall be reported to the Owner or Engineer so that they will be resolved prior to the bidding, where this cannot be done at least 7 working days prior to bid; the greater or more costly of the discrepancy shall be bid. All labor and materials required to perform the work described shall be included as part of this Contract.

F. It is the intention of this Section of the Specifications to outline minimum requirements to furnish the Owner with a turn-key and fully operating system in cooperation with other trades.

G. It is the intent of the above "Scope" to give the Contractor a general outline of the extent of

the Work involved; however, it is not intended to include each and every item required for the Work. Anything omitted from the "Scope" but shown on the Drawings, or specified later, or necessary for a complete and functioning heating, ventilating and air conditioning system shall be considered a part of the overall "Scope".

H. The Contractor shall rough-in fixtures and equipment furnished by others from rough-in and placement drawings furnished by others. The Contractor shall make final connection to fixtures and equipment furnished by others.

I. Contractor shall participate in the commissioning process; including but not limited to meeting attendance, completion of checklists and participation in functional testing.

1.03 RELATED SECTIONS

A. General Conditions

B. Supplementary Conditions

C. Division One

1.04 COOPERATION WITH TRADES:

A. Cooperation with trades of adjacent, related, or affected materials or operations shall be considered a part of this work in order to affect timely and accurate placing of work and bring together in proper and correct sequence, the work of such trades.

1.05 REFERENCES

A. National Electrical Code (NEC)

B. American Society for Testing and Materials (ASTM)

C. Underwriter's Laboratories, Inc. (UL)

D. Insulated Cable Engineer's Association (ICEA).

E. National Electrical Manufacturer's Association (NEMA).

F. Institute of Electrical and Electronic's Engineers (IEEE).

G. American National Standards Institute (ANSI).

H. National Fire Protection Association (NFPA).

I. International Energy Conservation Code (IECC).

1.06 COMPLETE FUNCTIONING OF WORK:

A. All work fairly implied as essential to the complete functioning of the electrical systems shown on the Drawings and Specifications shall be completed as part of the work of this Division unless specifically stated otherwise. It is the intention of the Drawings and Specifications to establish the types of the systems, but not set forth each item essential to the functioning of the system. In case of doubt as to the work intended, or in the event of amplification or clarification thereof, the Contractor shall call upon the Architect for supplementary instructions, Drawings, etc.

B. Contractor shall review all pertinent Drawings and adjust his work to all conditions shown there on. Discrepancies between Plans, Specifications, and actual field conditions shall be brought to the prompt attention of the Architect.

1. Approximate location of transformers, feeders, branch circuits, outlets, lighting and power panels, outlets for special systems, etc., are indicated on the Drawings. However, the Drawings, do not give complete and accurate detailed locations of such outlets, conduit runs, etc., and exact locations must be determined by actual field measurement. Such locations will, at all times, be subject to the approval of the Architect.
2. Communicate with the Architect and secure his approval of any outlet (lighting fixture, receptacle, switch, etc.) location about which there may be the least question. Outlets obviously placed in a location not suitable to the finished room or without specific approval, shall be removed and relocated when so directed by the Architect. Location of lighting fixtures shall be coordinated with reflected ceiling plans.

C. Additional coordination with mechanical contractor may be required to allow adequate clearances of mechanical equipment, fixtures and associated appurtenances. Contractor to notify Architect and Engineer of unresolved clearances, conflicts or equipment locations.

1.07 SCHEMATIC NATURE OF CONTRACT DOCUMENTS

A. The contract documents are schematic in nature in that they are only to establish scope and a minimum level of quality. They are not to be used as actual working construction drawings. The actual working construction drawings shall be the approved shop drawings.

1.08 CONTRACTOR'S QUALIFICATIONS

A. An approved contractor for the work under this division shall be:

1. A specialist in this field and have the personnel, experience, training, and skill, and the organization to provide a practical working system.
2. Able to furnish evidence of having contracted for and installed not less than 3 systems of comparable size and type that have served their Owners satisfactorily for not less than 3 years.
3. Perform work by persons qualified to produce workmanship of specified quality. Persons performing electrical work shall be required to be licensed. Onsite supervision, journeyman shall have minimum of journeyman license. Helpers, apprentices shall have minimum of apprentice license.

1.09 DATE OF FINAL ACCEPTANCE

A. The date of final acceptance shall be the date of owner occupancy, or the date all punch list items have been completed or final payment has been received. Refer to Division One for additional requirements.

B. The date of final acceptance shall be documented in writing and signed by the architect, owner and contractor.

1.10 DEFINITIONS AND SYMBOLS

A. General Explanation: A substantial amount of construction and Specification language constitutes definitions for terms found in other Contract Documents, including Drawings

which must be recognized as diagrammatic and schematic in nature and not completely descriptive of requirements indicated thereon. Certain terms used in Contract Documents are defined generally in this article, unless defined otherwise in Division 1.

B. Definitions and explanations of this Section are not necessarily either complete or exclusive, but are general for work to the extent not stated more explicitly in another provision of the Contract Documents.

C. Indicated: The term "Indicated" is a cross-reference to details, notes or schedules on the Drawings, to other paragraphs or schedules in the Specifications and to similar means of recording requirements in Contract Documents. Where such terms as "Shown", "Noted", "Scheduled", "Specified" and "Detailed" are used in lieu of "Indicated", it is for the purpose of helping the reader locate cross-reference material, and no limitation of location is intended except as specifically shown.

D. Directed: Where not otherwise explained, terms such as "Directed", "Requested", "Accepted", and "Permitted" mean by the Architect or Engineer. However, no such implied meaning will be interpreted to extend the Architect's or Engineer's responsibility into the Contractor's area of construction supervision.

E. Reviewed: Where used in conjunction with the Engineer's response to submittals, requests for information, applications, inquiries, reports and claims by the Contractor the meaning of the term "Reviewed" will be held to limitations of Architect's and Engineer's responsibilities and duties as specified in the General and Supplemental Conditions. In no case will "Reviewed" by Engineer be interpreted as a release of the Contractor from responsibility to fulfill the terms and requirements of the Contract Documents.

F. Furnish: Except as otherwise defined in greater detail, the term "Furnish" is used to mean supply and deliver to the project site, ready for unloading, unpacking, assembly, installation, etc., as applicable in each instance.

G. Install: Except as otherwise defined in greater detail, the term "Install" is used to describe operations at the project site including unloading, unpacking, assembly, erection, placing, anchoring, applying, working to dimension, finishing, curing, protection, cleaning and similar operations, as applicable in each instance.

H. Provide: Except as otherwise defined in greater detail, the term "Provide" is used to mean "Furnish and Install", complete and ready for intended use, as applicable in each instance.

I. Installer: Entity (person or firm) engaged by the Contractor or its subcontractor or Sub-contractor for performance of a particular unit of work at the project site, including unloading, unpacking, assembly, erection, placing, anchoring, applying, working to dimension, finishing, curing, protection, cleaning and similar operations, as applicable in each instance. It is a general requirement that such entities (Installers) be expert in the operations they are engaged to perform.

J. Imperative Language: Used generally in Specifications. Except as otherwise indicated, requirements expressed imperatively are to be performed by the Contractor. For clarity of reading at certain locations, contrasting subjective language is used to describe responsibilities that must be fulfilled indirectly by the Contractor, or when so noted by other identified installers or entities.

K. Minimum Quality/Quantity: In every instance, the quality level or quantity shown or specified is intended as minimum quality level or quantity of work to be performed or provided. Except as otherwise specifically indicated, the actual work may either comply exactly with that minimum (within specified tolerances), or may exceed that minimum within

reasonable tolerance limits. In complying with requirements, indicated or scheduled numeric values are either minimums or maximums as noted or as appropriate for the context of the requirements. Refer instances of uncertainty to Owner or Engineer via a request for information (RFI) for decision before proceeding.

L. Abbreviations and Symbols: The language of Specifications and other Contract Documents including Drawings is of an abbreviated type in certain instances, and implies words and meanings which will be appropriately interpreted. Actual word abbreviations of a self explanatory nature have been included in text of Specifications and Drawings. Specific abbreviations and symbols have been established, principally for lengthy technical terminology and primarily in conjunction with coordination of Specification requirements with notations on Drawings and in Schedules. These are frequently defined in Section at first instance of use or on a Legend and Symbol Drawing. Trade and industry association names and titles of generally recognized industry standards are frequently abbreviated. Singular words will be interpreted as plural and plural words will be interpreted as singular where applicable and where full context of Contract Documents so indicate. Except as otherwise indicated, graphic symbols and abbreviations used on Drawings and in Specifications are those recognized in construction industry for indicated purposes. Where not otherwise noted symbols and abbreviations are defined by 1993 ASHRAE Fundamentals Handbook, chapter 34 "Abbreviations and Symbols", ASME and ASPE published standards.

1.11 DELIVERY, STORAGE, AND HANDLING

A. Deliver products to the project properly identified with names, model numbers, types, grades, compliance labels, and other information needed for identification.

B. Deliver products to the project at such time as the project is ready to receive the equipment, pipe or duct properly protected from incidental damage and weather damage.

C. Damaged equipment shall be promptly removed from the site and new, undamaged equipment shall be installed in its place promptly with no additional charge to the Owner.

1.12 SUBMITTALS

A. Coordinate with Division 01 for submittal timetable requirements, unless noted otherwise within thirty (30) days after the Contract is awarded. The Contractor shall submit an electronic copy of a complete set of shop drawings and complete data covering each item of equipment or material. The submittal of each item requiring a submittal must be received by the Architect or Engineer within the above thirty day period. The Architect or Engineer shall not be responsible for any delays or costs incurred due to excessive shop drawing review time for submittals received after the thirty (30) day time limit. The Architect and Engineer will retain a copy of all shop drawings for their files. All literature pertaining to items subject to Shop Drawing submittal shall be submitted at one time. Submittals shall be placed in one electronic file in PDF 8.0 format and bookmarked for individual specification sections. Individual electronic files of submittals for individual specifications shall not be permitted. Each submittal shall include the following items:

1. A cover sheet with the names and addresses of the Project, Architect, MEP Engineer, General Contractor and the Subcontractor making the submittal. The cover sheet shall also contain the section number covering the item or items submitted and the item nomenclature or description.
2. An index page with a listing of all data included in the Submittal.
3. A list of variations page with a listing all variations, including unfurnished or additional required accessories, items or other features, between the submitted

equipment and the specified equipment. If there are no variations, then this page shall state "NO VARIATIONS". Where variations affect the work of other Contractors, then the Contractor shall certify on this page that these variations have been fully coordinated with the affected Contractors and that all expenses associated with the variations will be paid by the submitting Contractor. This page will be signed by the submitting Contractor.

4. Equipment information including manufacturer's name and designation, size, performance and capacity data as applicable. All applicable Listings, Labels, Approvals and Standards shall be clearly indicated.
5. Dimensional data and scaled drawings as applicable to show that the submitted equipment will fit the space available with all required Code and maintenance clearances clearly indicated and labeled at a minimum scale of 1/4" = 1'-0", as required to demonstrate that the alternate or substituted product will fit in the space available.
6. Identification of each item of material or equipment matching that indicated on the Drawings.
7. Sufficient pictorial, descriptive and diagrammatic data on each item to show its conformance with the Drawings and Specifications. Any options or special requirements or accessories shall be so indicated. All applicable information shall be clearly indicated with arrows or another approved method.
8. Additional information as required in other Sections of this Division.
9. Certification by the General Contractor and Subcontractor that the material submitted is in accordance with the Drawings and Specifications, signed and dated in long hand. Submittals that do not comply with the above requirements shall be returned to the Contractor and shall be marked "**REVISE AND RESUBMIT**".

B. Refer to Division 1 for additional information on shop drawings and submittals.

C. Equipment and materials submittals and shop drawings will be reviewed for compliance with design concept only. It will be assumed that the submitting Contractor has verified that all items submitted can be installed in the space allotted. Review of shop drawings and submittals shall not be considered as a verification or guarantee of measurements or building conditions.

D. Where shop drawings and submittals are marked "**REVIEWED**", the review of the submittal does not indicate that submittals have been checked in detail nor does it in any way relieve the Contractor from his responsibility to furnish material and perform work as required by the Contract Documents.

E. Shop drawings shall be reviewed and returned to the Contractor with one of the following categories indicated:

1. **REVIEWED:** Contractor need take no further submittal action, shall include this submittal in the O&M manual and may order the equipment submitted on.
2. **REVIEWED AS NOTED:** Contractor shall submit a letter verifying that required exceptions to the submittal have been received and complied with including additional accessories or coordination action as noted, and shall include this submittal and compliance letter in the O&M manual. The contractor may order the equipment submitted on at the time of the returned submittal providing the Contractor complies with the exceptions noted.
3. **NOT APPROVED:** Contractor shall resubmit new submittal on material, equipment or method of installation when the alternate or substitute is not approved, the Contractor will automatically be required to furnish the product, material or method named in the Specifications and/or drawings. Contractor shall

not order equipment that is not approved. Repetitive requests for substitutions will not be considered.

4. **REVISE AND RESUBMIT:** Contractor shall resubmit new submittal on material, equipment or method of installation when the alternate or substitute is marked revise and resubmit, the Contractor will automatically be required to furnish the product, material or method named in the Specifications and/or provide as noted on previous shop drawings. Contractor shall not order equipment marked revise and resubmit. Repetitive requests for substitutions will not be considered.
5. **CONTRACTOR'S CERTIFICATION REQUIRED:** Contractor shall resubmit submittal on material, equipment or method of installation. The Contractor's stamp is required stating the submittal meets all conditions of the contract documents. The stamp shall be signed by the General Contractor. The submittal will not be reviewed if the stamp is not placed and signed on all shop drawings.
6. **MANUFACTURER NOT AS SPECIFIED:** Contractor shall resubmit new submittal on material, equipment or method of installation when the alternate or substitute is marked manufacturer not as specified, the Contractor will automatically be required to furnish the product, material or method named in the specifications. Contractor shall not order equipment where submittal is marked manufacturer not as specified. Repetitive requests for substitutions will not be considered.

F. Materials and equipment which are purchased or installed without shop drawing review shall be at the risk of the Contractor and the cost for removal and replacement of such materials and equipment and related work which is judged unsatisfactory by the Owner or Engineer for any reason shall be at the expense of the Contractor. The responsible Contractor shall remove the material and equipment noted above and replace with specified equipment or material at his own expense when directed in writing by the Architect or Engineer.

G. Shop Drawing Submittals shall be complete and checked prior to submission to the Engineer for review.

H. Furnish detailed shop drawings, descriptive literature, physical data and a specification critique for each section indicating "compliance" and/or "variations" for the following items:

Distribution and Panelboards
Wiring Gutters
Heavy Duty Disconnect Switches
Lighting Fixtures
Lighting Contactors
Time Clocks
Lighting Control System
Photocells
Wiring Devices and Plates
Conduit and Fittings
Wire
Surge Protection Device (SPD)
Emergency Generator
Automatic Transfer Switches
Fire Alarm System (See Div. 28)

I. Refer to each specification section for additional requirements.

1.13 OPERATION AND MAINTENANCE MANUALS

A. Prepare maintenance manuals in accordance with Division 1 and in addition to the requirements specified in Division 1, include the following information for equipment items:

1. Description of function, normal operating characteristics and limitations, performance curves, engineering data and tests, and complete nomenclature and commercial numbers of replacement parts.
2. Manufacturer's printed operating procedures to include start-up, break-in, and routine and normal operating instructions; regulation, control, stopping, shutdown, and emergency instructions; and summer and winter operating instructions.
3. Maintenance procedures for routine preventative maintenance and troubleshooting; disassembly, repair, and reassembly; aligning and adjusting instructions.
4. Servicing instructions and lubrication charts and schedules.

1.14 COORDINATION DRAWINGS

A. Prepare coordination drawings to a scale of 1/4"=1'-0" or larger; detailing major elements, components, and systems of mechanical equipment and materials in relationship with other systems, installations, and building components. Indicate locations where space is limited for installation and access and where sequencing and coordination of installations are of importance to the efficient flow of the Work, including (but not necessarily limited to) the following:

1. Indicate the proposed locations of pipe, duct, equipment, and other materials. Include the following:
   a. Wall and type locations.
   b. Clearances for installing and maintaining insulation.
   c. Locations of light fixtures and sprinkler heads.
   d. Clearances for servicing and maintaining equipment, including tube removal, filter removal, and space for equipment disassembly required for periodic maintenance.
   e. Equipment connections and support details.
   f. Exterior wall and foundation penetrations.
   g. Routing of storm and sanitary sewer piping.
   h. Fire-rated wall and floor penetrations.
   i. Sizes and location of required concrete pads and bases.
   j. Valve stem movement.
   k. Structural floor, wall and roof opening sizes and details.
2. Indicate scheduling, sequencing, movement, and positioning of large equipment into the building during construction.
3. Prepare floor plans, elevations, and details to indicate penetrations in floors, walls, and ceilings and their relationship to other penetrations and installations.
4. Prepare reflected ceiling plans to coordinate and integrate installations, air distribution devices, light fixtures, communication systems components, and other ceiling-mounted items.

B. This Contractor shall be responsible for coordination of all items that will affect the installation of the work of this Division. This coordination shall include, but not be limited to: voltage, ampacity, capacity, electrical and piping connections, space requirements, sequence of construction, building requirements and special conditions.

C. By submitting shop drawings on the project, this Contractor is indicating that all necessary coordination has been completed and that the systems, products and equipment submitted

can be installed in the building and will operate as specified and intended, in full coordination with all other Contractors and Subcontractors.

1.15 RECORD DRAWINGS

A. Maintain a continuous record during the course of construction of all changes and deviations in the work from the contract drawings. Upon completion of the work, purchase a set of "Auto Positive Tracings" on vellum and make corrections as required to reflect the electrical systems as installed. Location and size of all conduit shall be accurately shown to dimension. Submit three prints of the tracings for approval. Make corrections to tracings as directed and deliver "Auto Positive Tracings" to the Architect. Record drawings shall be furnished in addition to shop drawings. Symbols on the Record drawings shall correspond to the identification symbols on the contract drawings and equipment identification plates and tags.

B. The Contractor shall maintain a set of clearly marked black line record "AS-BUILT" prints on the job site on which he shall mark all work details, alterations to meet site conditions and changes made by "Change Order" notices. These shall be kept available for inspection by the Owner, Architect or Engineer at all times.

C. Refer to Division 1 for additional requirements concerning record drawings. If the Contractor does not keep an accurate set of as-built drawings, the pay request may be altered or delayed at the request of the Architect. Mark the drawings with a colored pencil. Delivery of as-built prints and reproducibles is a condition of final acceptance.

D. The record prints shall be updated on a daily basis and shall indicate accurate dimensions for all buried or concealed work, precise locations of all concealed pipe or duct, locations of all concealed valves, controls and devices and any deviations from the work shown on the Construction Documents which are required for coordination. All dimensions shall include at least two dimensions to permanent structure points.

E. Submit three prints of the tracings for approval. Make corrections to tracings as directed and delivered "Auto Positive Tracings" to the architect. "As-Built" drawings shall be furnished in addition to shop drawings.

F. When the option described above is not exercised, then upon completion of the work, the Contractor shall transfer all marks to a clear, concise, set of reproducible, record "AS-BUILT" drawings and shall submit the reproducible drawings with corrections made by a competent draftsman and three (3) sets of black line prints to the Architect or Engineer for review prior to scheduling the final inspection at the completion of the work. The reproducible record "AS-BUILT" drawings shall have the Engineers Name and Seal removed or blanked out and shall be clearly marked and signed on each sheet as follows:

CERTIFIED RECORD DRAWINGS

DATE:

(NAME OF GENERAL CONTRACTOR)

BY:_____
(SIGNATURE)

(NAME OF SUBCONTRACTOR)

BY:_____
(SIGNATURE)

1.16 CERTIFICATIONS AND TEST REPORTS

A. Submit a detailed schedule for completion and testing of each system indicating scheduled dates for completion of system installation and outlining tests to be performed and schedule date for each test. This detailed completion and test schedule shall be submittal at least 90 days before the projected Project completion date.

B. Test result reporting forms shall be submitted for review no later than the date of the detailed schedule submitted.

C. Submit 4 copies of all certifications and test reports to the Architect or Engineer for review adequately in advance of completion of the Work to allow for remedial action as required to correct deficiencies discovered in equipment and systems.

D. Certifications and test reports to be submitted shall include, but not be limited to those items outlined in Section of Division 26.

1.17 MAINTENANCE MANUALS

A. Coordinate with Division 1 for maintenance manual requirements, unless noted otherwise bind together in “D ring type” binders by National model no. 79-883 or equal, binders shall be large enough to allow ¼” of spare capacity. Three (3) sets of all approved shop drawing submittals, fabrication drawings, bulletins, maintenance instructions, operating instructions and parts exploded views and lists for each and every piece of equipment furnished under this Specification. All sections shall be typed and indexed into sections and labeled for easy reference and shall utilize the individual specification section numbers shown in the Electrical Specifications as an organization guideline. Bulletins containing information about equipment that is not installed on the project shall be properly marked up or stripped and reassembled. All pertinent information required by the Owner for proper operation and maintenance of equipment supplied by Division 26 shall be clearly and legibly set forth in memoranda that shall, likewise, be bound with bulletins.

B. Prepare maintenance manuals in accordance with Special Project Conditions, in addition to the requirements specified in Division 26, include the following information for equipment items:

1. Identifying names, name tags designations and locations for all equipment.
2. Fault Current calculations and Coordination Study.
3. Reviewed shop drawing submittals with exceptions noted compliance letter.
4. Fabrication drawings.
5. Equipment and device bulletins and data sheets clearly highlighted to show equipment installed on the project and including performance curves and data as applicable, i.e., description of function, normal operating characteristics and limitations, performance curves, engineering data and tests, and complete nomenclature and model numbers of replacement parts.
6. Manufacturer's printed operating procedures to include start-up, break-in, and routine and normal operating instructions; regulation, control, stopping, shutdown, and emergency instructions; and summer and winter operating instructions.
7. Maintenance procedures for routine preventative maintenance and troubleshooting; disassembly, repair, and reassembly; aligning and adjusting instructions, servicing instructions and lubrication charts and schedules.
8. Equipment name plate data.
9. Wiring diagrams.
10. Exploded parts views and parts lists for all equipment and devices.

11. Color coding charts for all painted equipment and conduit.
12. Location and listing of all spare parts and special keys and tools furnished to the Owner.
13. Furnish recommended lubrication schedule for all required lubrication points with listing of type and approximate amount of lubricant required.

C. Refer to Division 1 for additional information on Operating and Maintenance Manuals.

D. Operating and Maintenance Manuals shall be turned over to the Owner or Engineer a minimum of 14 working days prior to the beginning of the operator training period.

1.18 OPERATOR TRAINING

A. The Contractor shall furnish the services of factory trained specialists to instruct the Owner's operating personnel. The Owner's operator training shall include 12 hours of onsite training in three 4 hour shifts.

B. Before proceeding with the instruction of Owner Personnel, prepare a typed outline in triplicate, listing the subjects that will be covered in this instruction, and submit the outline for review by the Owner. At the conclusion of the instruction period obtain the signature of each person being instructed on each copy of the reviewed outline to signify that he has a proper understanding of the operation and maintenance of the systems and resubmit the signed outlines.

C. Refer to other Division 26 Sections for additional Operator Training requirements.

1.19 SITE VISITATION

A. Visit the site of the proposed construction in order to fully understand the facilities, difficulties and restriction attending the execution of the work.

B. Before submitting a bid, it will be necessary for each Contractor whose work is involved to visit the site and ascertain for himself the conditions to be met therein in installing his work and make due provision for same in his bid. It will be assumed that this Contractor in submitting his bid has visited the premises and that his bid covers all work necessary to properly install the equipment shown. Failure on the part of the Contractor to comply with this requirement shall not be considered justification for the omission or faulty installation of any work covered by these Specifications and Drawings.

C. Understand the existing utilities from which services will be supplied; verify locations of utility services, and determine requirements for connections.

D. Determine in advance that equipment and materials proposed for installation fit into the confines indicated.

1.20 WARRANTY

A. The undertaking of the work described in this Division shall be considered equivalent to the issuance, as part of this work, of a specific guarantee extending one year beyond the date of completion of work and acceptance by Owner, against defects in materials and workmanship. Materials, appliances and labor necessary to effect repairs and replacement so as to maintain said work in good functioning order shall be provided as required. Replacements necessitated by normal wear in use or by Owner's abuse are not included under this guarantee.

B. All normal and extended warranties shall include parts, labor, miscellaneous materials, travel time, incidental expenses, freight/shipping, refrigerant, oils, lubricants, belts, filters and any expenses related to service call required to diagnose warranty problems.

1.21 TRANSFER OF ELECTRONIC FILES

A. Project documents are not intended or represented to be suitable for reuse by Architect/Owner or others on extensions of this project or on any other project. Any such reuse or modification without written verification or adaptation by Engineer, as appropriate for the specific purpose intended, will be at Architect/Owner's risk and without liability or legal exposure to Engineer or its consultants from all claims, damages, losses and expense, including attorney's fees arising out of or resulting thereof.

B. Because data stored in electric media format can deteriorate or be modified inadvertently, or otherwise without authorization of the data's creator, the party receiving the electronic files agrees that it will perform acceptance tests or procedures within sixty (60) days of receipt, after which time the receiving party shall be deemed to have accepted the data thus transferred to be acceptable. Any errors detected within the sixty (60) day acceptance period will be corrected by the party delivering the electronic files. Engineer is not responsible for maintaining documents stored in electronic media format after acceptance by the Architect/Owner.

C. When transferring documents in electronic media format, Engineer makes no representations as to the long term compatibility, usability or readability of documents resulting from the use of software application packages, operating systems, or computer hardware differing from those used by Engineer at the beginning of the Project.

D. Any reuse or modifications will be Contractor's sole risk and without liability or legal exposure to Architect, Engineer or any consultant.

E. The Texas Board of Architectural Examiners (TBAE) has stated that it is in violation of Texas law for persons other than the Architect of record to revise the Architectural drawings without the Architect's written consent.

1. It is agreed that "MEP" hard copy or computer-generated documents will not be issued to any other party except directly to the Architect/Owner. The contract documents are contractually copyrighted and cannot be used for any other project or purpose except as specifically indicated in AIA B-141 Standard Form of Agreement Between Architect and Owner.

2. If the client, Architect/Owner, or developer of the project requires electronic media for "record purposes", then an AutoCAD/Revit documents will be prepared by the Engineer on electronic media such as removable memory devices, flash drives, or CD's. These documents can also be submitted via file transfer protocols. AutoCAD/Revit files will be submitted with all title block references intact to permit the end user to only view and plot the drawings. Revisions will not be permitted in this configuration.

3. At the Architect/Owner's request, Engineer will assist the contractor in the preparation of the submittals and prepare one copy of AutoCAD/Revit files on electronic media or submit through file transfer

protocols. The electronic media will be prepared with all indicia of documents ownership removed. The electronic media will be prepared in a ".rvt" or ".dwg" format to permit the end user to revise the drawings.

PART 2 - PRODUCTS

2.01 SUBSTITUTIONS

A. The names and manufacturers and model numbers have been used in the Contract documents to establish types of equipment and standards of quality. Where more than one manufacturer is named for a specific item of equipment, only one of the specified manufacturers will be considered for approval. Where only one manufacturer is mentioned with the phrase "or approved equal", Contractor may submit an alternate manufacturer for consideration, provided the following conditions are met:

1. Submit alternate equipment with complete descriptive data in shop drawing form. Provide sample of equipment upon request for review by Architect. Samples will be returned if requested in writing.
2. Alternate equipment must be equal from the standpoint of materials, construction and performance.
3. Alternate submittal must be presented to the Engineer/Architect ten (10) days prior to bid date for approval.

B. The Architect and Engineer shall be the sole judge of quality and equivalence of equipment, materials and methods.

2.02 All materials and products used on this project shall be listed by Underwriters' Laboratories.

2.03 ACCESS DOORS

A. Wherever access is required in walls or ceilings to concealed junction boxes, pull boxes, equipment, etc., installed under this Division, furnish a hinged access door and frame with flush latch handle to another Division for installation. Doors shall be as follows:

1. Plaster Surfaces: Milcor Style K.
2. Ceramic Tile Surfaces: Milcor Style M.
3. Drywall Surfaces: Milcor Style DW.
4. Install panels only in locations approved by the Architect.

2.04 EQUIPMENT PADS

A. Provide 4-inch high concrete pads for indoor floor mounted equipment. Pads shall conform to the shape of the equipment with a minimum of 6 inches beyond the equipment. Top and sides of pads shall be troweled to a smooth finish, equivalent to the floor. External corners shall be bullnosed to a 3/4-inch radius, unless shown otherwise.

B. Provide 6-inch high concrete pads for all exterior mounted equipment. Pads shall conform to the shape of the equipment with a minimum of 6 inches beyond the equipment. Provide a 4-foot monolithic extension to the pad in front of the equipment for service when mounted on a non-finished area (i.e. landscape, gravel, clay, etc.). Top and sides of pads shall be troweled to a smooth finish. External corners shall be bullnosed to a 3/4-inch radius, unless shown otherwise.

C. Provide a minimum 6-inch high, steel reinforced concrete pad for generators. Pads shall be 6 inches larger than the outside perimeter dimensions. Provide a 4-foot monolithic extension to the pad around the equipment for service when mounted on a non-finished area (i.e. landscape, gravel, clay, etc.). Refer to structural details. Top and sides of pads shall be troweled to a smooth finish. External corners shall be bullnosed to a 3/4-inch

radius, unless shown otherwise. The Generator shall be bolted to the pad per the manufacturer's recommendations.

D. Provide steel reinforced concrete pad for utility transformers. Pads shall comply with Utility Company Standards.

2.05 ESCUTCHEONS

A. Provide heavy chrome or nickel plated plates, of approved pattern, on conduit passing through walls, floors and ceilings in finished areas. Where conduit passes through a sleeve, no point of the conduit shall touch the building construction. Caulk around such conduit with sufficient layers of two hour rated firesafing by Thermafiber 4.0 P.C.F. density, U.S.G. fire test 4/11/78 and seal off openings between conduit and sleeves with non-hardening mastic prior to application of escutcheon plate. Escutcheons shall be Gravler Sure-Lock, or approved equal.

2.06 SPACE LIMITATIONS

A. Equipment shall be chosen which shall properly fit into the physical space provided and shown on the drawings, allowing ample room for access, servicing, removal and replacement of parts, etc. Adequate space shall be allowed for clearances in accordance with Code requirements. Physical dimensions and arrangement of equipment shall be subject to the approval of the Architect.

2.07 PAINTING

A. All factory assembled equipment for electrical work, except light fixtures, that normally is delivered with a factory applied finish shall be delivered with a hard surface factory applied finish such as baked-on machinery enamel which will not require additional field painting. The finish shall consist of not less than 2 coats of medium gray color paint USA No. 61 Munsell Notation 8-3G, 6. 10/0.54 enamel. This Contractor shall protect this finish from damage due to construction operations until acceptance of the building. He shall be responsible for satisfactorily restoring any such finishes or replacing equipment that becomes stained or damaged.

2.08 ELECTRICAL SYSTEM IDENTIFICATION

A. Conduit Systems: Provide adequate marking of major conduit which is exposed or concealed in accessible spaces to distinguish each run as either a power or signal/communication conduit. Except as otherwise indicated, use orange banding with black lettering. Provide self-adhesive or snap-on type plastic markers. Indicate voltage for that raceway. Locate markers at ends of conduit runs, on pull boxes, on junction boxes, near switches and other control devices, near items of equipment served by the conductors, at points where conduit passes through walls or floors, or enters non-accessible construction and at spacings of not more than 50 feet along each run of conduit. Switch-leg conduit and short branches for power connections do not have to be marked, except where conduit is larger than ¾ inch. Branch circuit conduits, junction boxes and pull boxes shall be marked with a permanent marker indicating panel name and branch circuit numbers.

B. Underground Cable Identification: Bury a continuous, preprinted, bright colored plastic ribbon cable marker with each underground cable (or group of cables), regardless of whether conductors are in conduit, duct bank, or direct buried. Locate each directly over cables, 6 to 8 inches below finished grade.

C. Identification of Equipment:

1. All major equipment shall have a manufacturer's label identifying the manufacturer's address, equipment model and serial numbers, equipment size, and other pertinent data. Care shall be taken not to obliterate this nameplate in any way.
2. A black-white-black laminated plastic engraved identifying nameplate shall be secured by stainless steel screws to each automatic transfer switch, switchboard, distribution panel, motor control center, panelboards, and safety disconnect switches. Emergency backed panelboards shall have white on red background nameplates.
   a. Identifying nameplates shall have ¼ inch high engraved letters and shall contain the following information:
      1) Name
      2) Voltage
      3) Phase
      4) "3" or "4" wire, and
      5) Where it is fed from.
   b. An example of a panelboard nameplate is:
      Center: **Panel – 1HB**
      Center: **480/277 volt, 3 phase, 4 wire**
      Center: **Fed from DP2**
   c. An example of an automatic transfer switch nameplate is:
      Center: **ATS #2**
      Center: **480/277 volt, 3 phase, 4 wire, 4 pole**
      Center: **Fed from MSB and DPE**
   d. An example of an equipment disconnect switch nameplate is:
      Center: **AHU-1**
      Center: **480V, 3Ph**
      Center: **DP2-2,4,6**
3. Each feeder device in a switchboard, distribution panel, and motor control center device shall have a nameplate showing the load served in ½ inch high engraved letters.
4. A black-white-black laminated plastic engraved identifying nameplate shall be secured by screws to each individual motor starter, enclosed circuit breaker, wireway, and terminal cabinet.
   a. Identifying nameplates shall have ¼ inch high engraved letters and shall indicate the equipment served.
   b. An example if an enclosed circuit breaker is:
      Center: **Panel KH MCB**.
5. Each wiring device in non-dwelling units shall be identified with the branch circuit (LA-2) using black on clear self-adhesive tape for normal loads and red on white tape for emergency loads. Affix labels to the front of the coverplate.
6. Cardholders and directory cards shall be furnished for circuit identification in panelboards. Cardholder shall be located on inside of panel door and shall be in a metal frame with clear plastic front. Circuit lists shall be typewritten. Circuit descriptions shall include location and name of each item of equipment served. Spares and spaces shall be written in erasable pencil for future use. Circuit directory shall show the room served by each circuit. The final graphs/signage room numbers shall be used. Do not use Architectural numbering on plans.
7. Prohibited Markings: Markings which are intended to identify the manufacturer, vendor, or other source from which the material has been obtained are prohibited for installation within public, tenant, or common areas within the project. Also, prohibited are materials or devices which bear evidence that markings or insignias have been removed. Certification, testing (example, Underwriters' Laboratories, Inc.), and approval labels are exceptions to this requirement.
8. Warning Signs: Provide warning signs where there is hazardous exposure

associated with access to or operation of electrical facilities. Provide text of sufficient clarity and lettering of sufficient size to convey adequate information at each location; mount permanently in an appropriate and effective location. Comply with recognized industry standards for color and design.

9. Operational Tags: Where needed for proper and adequate information on operation and maintenance of electrical system, provide tags of plasticized card stock, either preprinted or hand printed. Tags shall convey the message, example: "DO NOT OPEN THIS SWITCH WHEN BURNER IS OPERATING."

PART 3 - EXECUTION

3.01 EXCAVATING AND BACKFILLING

A. Trenching and backfilling and other earthwork operations required to install the facilities specified herein shall conform to the applicable requirements of Division 2 (95% of maximum standard density). Where trenching or excavation is required in improved areas, the backfill shall be compacted to a condition equal to that of adjacent undisturbed earth and the surface of the area restored to the condition existing prior to trenching or excavating operations. Provide a minimum of 3" of sand underneath all conduits. The plans indicate information pertaining to surface and sub-surface obstructions; however, this information is not guaranteed. Should obstructions be encountered whether or not shown, the Contractor shall alter routing of new work, reroute existing lines, remove obstructions where permitted, or otherwise perform whatever work is necessary to satisfy the purpose of new work and leave existing surfaces and structures in a satisfactory and serviceable condition. **All work shall comply with OSHA Standards.**

3.02 WORKMANSHIP AND CONCEALMENT

A. The work of this Section shall be performed by workman skilled in their trade. Installation shall be consistent in completeness whether concealed or exposed. Each item of electrical work shall be concealed in walls, chases, under floors and above ceilings except:

1. Where shown to be exposed.
2. Where exposure is necessary to the proper function.

3.03 SLEEVES, CUTTING AND PATCHING

A. This section shall be responsible for placing sleeves for all conduit passing through walls, partitions, sound walls, beams, floors, roof, etc. Sleeves through below-grade walls shall use water-tight fitting manufactured by O-Z/Gedney.

B. All cutting and patching will be done under another Division, but this Section will be responsible for timely performance of this work and layout of holes and setting sleeves.

C. All un-used sleeves shall be sealed with 2 hour UL approved fire sealant manufactured by "3M" or approved equal.

D. Refer to 26 05 33 for additional requirements.

3.04 ELECTRICAL GEAR

A. Install all electrical equipment in accordance with the National Electrical Code and as shown on the drawings.

B. Lighting contactors, time clocks, disconnect switches, etc. mounted in mechanical/electrical rooms shall be mounted at a working height not requiring a ladder, when wall space is available. Installation of these devices at greater elevations shall be approved by the Engineer. Contractor shall provide a coordination sketch of each mechanical/electrical room noting locations and mounting heights of all electrical devices(note bottom and top elevations) shown to be installed. Sketches shall be provided to the Engineer for review and the general contractor for coordination with other trades working in these rooms.

3.05 CLEANING

A. Clean lighting fixtures and equipment.

B. Touch-up and refinish scratches and marred surfaces on panels, switches, starters, and transformers.

3.06 CORROSIVE AREAS

A. In areas of a corrosive nature, which include but are not limited to the following: pool equipment rooms, cooling towers and areas subject to salt air, etc., provide NEMA 4 X stainless steel or fiberglass reinforced enclosures for contactors, panelboards, controllers, starters, disconnects and materials used as supporting means (i.e. plastibond unistrut, pipe, fittings). The use of spray on coating may be acceptable in some applications.

3.07 TESTS AND INSPECTIONS

A. Tests and inspection requirements shall be coordinated with Division I.

B. Date for final acceptance test shall be sufficiently in advance of completion date of contract to permit alterations or adjustments necessary to achieve proper functioning of equipment prior to contract completion date.

C. Conduct re-tests as directed by Architect on portions of work or equipment altered or adjusted as determined to be necessary by final acceptance test. No resultant delay or consumption of time as a result of such necessary re-test beyond contract completion date shall relieve Contractor of his responsibility under contract.

D. Put circuits and equipment into service under normal conditions, collectively and separately, as may be required to determine satisfactory operation. Demonstrate equipment to operate in accordance with requirements of these specifications. Perform tests in the presence of Architect. Furnish instruments and personnel required for tests.

E. Final Inspection:

1. At the time designated by the Architect, the entire system shall be inspected by the Architect and Engineer. The contractor or his representative shall be present at this inspection.
2. Panelboards, switches, fixtures, etc., shall be cleaned and in operating condition.
3. Certificates and documents required hereinbefore shall be in order and presented to the Architect prior to inspection.
4. Panel covers, junction box covers, etc., shall be removed for visual inspection of the wire, bus bars, etc.
5. After the inspection, any items which are noted as needing to be changed or corrected in order to comply with these specifications and the drawings shall be accomplished without delay.

F. The contractor shall provide a thermographic test using an independent testing laboratory using an infrared scanning device. This test shall include but not limited to all switchboards, distribution panelboards, panelboards, automatic transfer switches and other electrical distribution devices. This test shall be conducted to locate high temperature levels. This test shall be conducted between 3 to 8 months after occupancy, but not beyond the one year warranty period. Submit test to the architect and engineer using test reporting forms. All unacceptable conditions shall be corrected prior to the end of the warranty period.

END OF SECTION 26 02 00

SECTION 26 05 19 - WIRE, CABLE AND RELATED MATERIALS

PART 1 - GENERAL

1.01 SCOPE

A. Provide 1000 volt building wire, cable and connectors and 300 volt wire, cable and connectors.

B. WORK INCLUDED: Include the following Work in addition to items normally part of this Section.

1. Wiring for lighting and power.
2. Automatic Control Wiring.
3. Connection of equipment shown.

C. WORK SPECIFIED ELSEWHERE:

1. Heating, ventilating, and air conditioning equipment.
2. Structured cabling system.
3. Coaxial cables
4. Fire Alarm System.
5. Voice Communications and Sound System.

1.02 STANDARDS

A. UL83

B. ASTM B-3

C. All wire cable and connectors shall be UL approved.

1.03 ACCEPTABLE MANUFACTURERS

A. 1000 VOLT WIRE AND CABLE

1. Southwire
2. Encore
3. Cerro
4. General Cable

B. 300 VOLT WIRE AND CABLE

1. Westpenn
2. Beldon
3. Alpha
4. Southwire
5. General Cable

C. FLEXIBLE CABLE SYSTEMS

1. AFC Modular Cable Systems

D. CONNECTORS

1. Ilsco

2. Cooper
3. AMP - TYCO
4. Burndy
5. Ideal
6. 3M
7. NSI Industries
8. O.Z. Gedney
9. Thomas & Betts
10. Buchanan

1.04 SUBMITTALS

A. Shop drawings shall include, but not limited to:

1. Cutsheets of wire, cable and connectors to indicate the performance, fabrication procedures, product variations, and accessories.

1.05 REQUIREMENTS OF REGULATORY AGENCIES WORK IN ACCORDANCE WITH:

A. National Electrical Code.

B. Local, municipal, or state codes that have jurisdiction.

PART 2 - PRODUCTS

2.01 WIRING

A. All wire shall be new and continuous without weld, splice, or joints throughout its length. It must be uniform in cross-section, free from flaws, scales and other imperfections.

B. WIRE MATERIAL: Conductors shall be soft drawn, annealed copper. Aluminum wiring is not acceptable unless otherwise noted on drawings.

C. TYPES:

1. Provide type “THHN/THWN-2” insulation for all buried feeders and service entrance conductors.
2. Provide type “THHN/THWN-2” insulation for all branch circuits and above grade feeders.
3. All wire No. 8 and larger shall be stranded. All wire No. 10 and smaller shall be stranded or solid.
4. Provide type "XHHW" or other 90 degrees insulation wiring for branch circuit wiring installed through continuous rows of fluorescent fixture bodies.
5. All 300-volt cable including but not limited to telephone, fire alarm, data, CATV and security shall be UL listed for use in return air plenums.

D. CONDUCTOR SIZES

1. Feeder conductors shall be sized for a maximum of 2% drop in rated voltage at scheduled load.
2. Branch circuit conductors shall be sized for a maximum 3% drop in the rated voltage to the longest outlet on the circuit.
3. Minimum wire shall be No. 12, unless otherwise shown on Drawings or required by Code.

E. COLOR CODING: No. 6 or larger conductors shall use tape for color coding. No. 8 and

smaller wire shall be color coded in accordance with the governing authority requirements or as follows:

120/208 VOLT
Neutral: White
Phase A: Black
Phase B: Red
Phase C: Blue
Ground: Green

2.02 GROUNDING

Permanently connect all conduit work, motors, starters, and other electrical equipment to grounding system in accordance with the National Electrical Code.

PART 3 - EXECUTION

3.01 WIRE

A. Do not pull wire into conduit until Work of an injurious nature is completed. Where two or more circuits run to a single outlet box, each circuit shall be properly tagged. Wyreze or approved equal may be used as a lubricant where necessary.

B. Splices shall be fully made up in outlet boxes with compression crimp-on type splice connectors.

C. Joints and splices will not be permitted in service entrance or in feeders. Joints in branch circuits will be permitted where branch circuits divide, and then shall consist of one through-circuit to which the branch shall be spliced. Joints shall not be left for the fixture hanger to make. Connect joints and splices with Buchanan Series "2000" solderless connectors complete with insulating caps or properly sized twist on wire nuts. "**Wago" push-in connectors are not acceptable.**

D. All stranded conductors shall be furnished with lugs or connectors.

E. Connectors furnished with circuit breakers or switches shall be suitable for copper wire termination.

F. "Sta-Cons" shall be used to terminate stranded conductors on all switches and receptacles.

G. All stranded #10 and small conductors shall be terminated with an approved solderless terminal if the device or light fixture does not have provisions for clamp type securing of the conductor.

H. The jacket for all travelers used on 3-way and 4-way switches shall be pink.

3.02 BALANCING SYSTEM

The load on each distribution and lighting panel shall be balanced to within 10% by proper arrangement of branch circuits on the different phase legs. Provide written documentation showing results. Submit with O & M manuals.

3.03 LOW VOLTAGE WIRING

A. Low voltage wiring shall be plenum rated. All wiring in mechanical rooms, electrical rooms, drywall ceiling, inaccessible areas, underground, plaster ceiling, inside concealed walls areas exposed to occupant view, and other areas subject to physical damage shall be run in conduit.

B. Low voltage wiring shall be routed in separate raceways from power wiring systems.

C. Sleeves shall be placed in the forms of concrete, masonry and fire rated walls, floor slabs and beams, for the passage of wiring. Sleeves should be set in place a sufficient time ahead of the concrete work so as not to delay the work. Sleeves shall be rigid galvanized steel.

D. Provide Caddy J-hooks supported independently from other system to support cable at 4-foot on center or closer if required by manufacture.

3.04 CABLE SUPPORTS

A. Provide cable supports in all vertical raceways in accordance with Article 300.19 of the NEC.

3.05 DEFECTS

A. Defects shall include, but are not to limited to, the following:

1. Tripping circuit breakers under normal operation.
2. Improperly connected equipment.
3. Damaged, torn, or skinned insulation.

END OF SECTION 26 05 19

SECTION 26 05 26 - GROUNDING

PART 1 - GENERAL

1.01 GENERAL REQUIREMENTS

A. The requirements of the General Conditions and Supplementary Conditions apply to all work herein.

1.02 SCOPE

A. WORK COMBINED WITH OTHER SECTIONS: Combine the work specified herein with the following Sections to form a single responsibility for the Work:

1. Electrical.
2. Basic materials and methods.

B. Provide electrical service, equipment and wiring device grounding as shown, scheduled and as specified.

C. The types of grounding include, but not limited to, the grounding bonding of all equipment devices, building steel piping, and as required by the National Electrical Code, Local Inspection Department and Power Company.

1.03 STANDARDS

A. NATIONAL ELECTRICAL CODE (NFPA-70)

B. Local municipal and State codes that have jurisdiction.

C. NECA

1.04 ACCEPTABLE MANUFACTURES

A. Provide grounding products manufactured by Copperweld and Cadweld.

B. Burndy

1.05 SUBMITTALS

A. Shop drawings shall include, but not limited to the following:

1. Cut sheets of ground rods, clamps and connectors.
2. Grounding system diagram.

PART 2 - PRODUCTS

2.01 GENERAL: Provide all materials required to construct a complete grounded electrical system.

A. GROUND RODS: Ground rods shall be 3/4" inch diameter by 10 feet long construction with copper jacket and a steel core.

B. CLAMPS: Ground clamps shall be copper except for steel or iron pipes in which the clamps shall be galvanized iron.

C. CONDUCTORS: Conductors shall be connected by means of an approved pressure connector or clamp.

D. EQUIPMENT GROUND BUS: Provide minimum 2" x 12" x ¼" copper ground bus bar, secured to wall in main electrical rooms and wherever noted at 12"AFF. Insulate from wall with stand-off bushings. Refer to Detail on the drawings.

PART 3 - EXECUTION

3.01 INSTALLATION

A. GENERAL: Install grounding system as shown and specified to ensure a properly grounded system.

B. SERVICE ENTRANCE GROUNDING SYSTEM: Provide a main bonding jumper between the neutral and ground bus of main disconnect switch. Route a separate grounding electrode conductor in conduit from main disconnect switch to the ground rod grid, incoming cold water piping system, and to the "lightning protection system" (250.106 of NEC) underground bonding loop. Provide a bonding jumper around water meter. The grounding electrode conductor shall be stranded copper, 98% conductivity and shall be run continuous without splices or joints and installed at least 12" below grade.

C. BUILDING STEEL AND PIPING SYSTEM: Install a bonding jumper between building steel and metallic piping systems to bond them to the electrical grounding system.

D. NEUTRAL: The neutral shall be grounded only at the service entrance and other separately derived systems. The neutral shall be kept separate from the grounding system and shall not be used as a ground.

E. GROUNDING SEPARATELY DERIVED ALTERNATING CURRENT SYSTEM

1. STANDBY EMERGENCY GENERATOR: The generator neutral shall be bonded to the generator when a 4-pole switched neutral automatic transfer switch is specified.

F. GROUNDING CONDUCTOR: A grounding conductor and metallic conduit system shall bond all equipment served by the electrical system. Provide a flexible bonding jumper for isolated metallic piping and ductwork and around expansion fittings and joints.

G. CONDUIT GROUNDING BUSHING: Conduit terminating in equipment that has a ground bus such as switchboards, panelboards, etc., shall have grounding bushings installed. Ground each conduit 1-1/4", or larger by means of a grounding bushing and to the ground bus in the equipment.

H. MOTORS: The frame of all motors shall be grounded.

I. SPECIAL GROUNDING: Provide a minimum #6 AWG copper grounding conductor for each telephone board, television system, etc. unless otherwise noted. Terminate the grounding conductor on ground bus and to the building electrical grounding system. Refer to 800.100(D) and 820.100(D) of the NEC (2014).

J. REMOTE PANELBOARDS: Provide a grounding electrode conductor to all remote panels as required by the NEC and shown on drawings.

K. LIGHTING FIXTURES: Flexible fixture whips containing a green grounding conductor shall be used to connect lighting fixtures. Flexible fixture whips shall not exceed ten feet. MC cable whips shall not exceed 6 feet.

L. RECEPTACLES: All receptacles shall be grounded using the branch circuit grounding conductor. Receptacles shall use an approved grounding yoke.

3.02 TESTING: Perform a ground resistance test using a biddle analog or digital portable earth/ground resistance tester. The system resistance shall not exceed 5 OHMS. Provide additional electrodes as required. Refer to 250.53(A) of the NEC. Test shall not be conducted following wet weather. Provide personal instruments to conduct these tests and submit certified test for review. Test shall be verified by Engineer.

END OF SECTION 26 05 26

SECTION 26 05 33 - RACEWAYS

PART 1 - GENERAL

1.01 SCOPE

A. Provide electrical raceways and fittings as shown, scheduled and specified.

B. The types of raceways and fittings required are as follows:

1. Rigid Metal Conduit (RMC)
2. Intermediate Metal Conduit (IMC)
3. Electrical metallic tubing (EMT)
4. Rigid Polyvinyl Chloride Conduit (PVC) (Sch. 40 or 80)
5. Flexible Metal Conduit (FMC)
6. PVC coated rigid galvanized steel conduit.

1.02 STANDARDS

A. ANSI, C80.1 & C80.3

B. NEMA FB-1

C. NEMA TC3

D. UL, 6, 797 & 1242

1.03 ACCEPTABLE MANUFACTURERS

A. Raceways

1. Allied
2. Republic
3. Prime Conduit (Carlon)
4. Wheatland Tube
5. Cantex
6. Western Tube
7. Robroy Industries
8. OCAL

B. Fittings

1. Appleton
2. Crouse Hinds
3. Steel City
4. O.Z. Gedney
5. Carlon
6. Raco, Inc.
7. Bridgeport

C. Boxes

1. RACO
2. Thomas and Betts

3. Steel City
4. Eaton
5. Crouse-Hinds
6. Appleton

D. Surface Raceways

1. Hubbell
2. Wiremold
3. Panduit

1.04 SUBMITTALS

A. Shop drawing shall include but not be limited to:

1. Cutsheets for raceways and fitting.

1.05 REQUIREMENTS OF REGULATORY AGENCIES WORK IN ACCORDANCE WITH:

A. National Electrical Code.

B. Local, municipal, or state codes that have jurisdiction.

PART 2 - PRODUCTS

2.01 CONDUIT AND FITTINGS:

A. Rigid Metal Conduit.

(1) Hot-dip galvanized rigid steel conduit, galvanized after fabrication. All threads shall be galvanized after cutting. A uniform zinc coating shall be applied to the inner and outer walls.

(2) Fittings shall be threaded, malleable iron, either cadmium plated or hot-dip galvanized.

B. PVC Coated Rigid Metal Conduit.

(1) Conduit shall be same as rigid metal conduit with a factory-applied 40-mil-thick covering of polyvinyl chloride (PVC) bonded to the exterior of the metal and a 2-mil urethane interior coating.

(2) Fittings shall be the same as rigid metal conduit fittings with a factory-applied, 40-mil-thick covering of polyvinyl chloride (PVC) bonded to the exterior and a 2-mil urethane interior coating. All female threads shall be protected with urethane coating.

C. Intermediate Metal Conduit.

(1) Conduit shall be similar to rigid steel conduit except thinner wall.

(2) Fittings shall be threaded, malleable iron, either cadmium plated or hot-dip galvanized.

D. Electrical Metallic Tubing (EMT).

(1) EMT shall be made of hot-dip galvanized strip steel. The interior shall be coated with a corrosion-resistant lubricant for ease of wiring pulling.

E. Rigid Nonmetallic Conduit.

(1) Conduit shall be schedule 40 or 80 polyvinyl chloride (PVC) or fiberglass, UV stabilized, rated for 90°C conductors.

(2) Fittings shall be solvent weld socket type.

F. Flexible Metal Conduit

(1) Spirally wound continuously interlocked zinc coated strip steel.

(2) Fittings shall be one screw for smaller than 1-1/2-inch, two screw for 1-1/2-inch and larger, double clamp steel or malleable iron, either cadmium plated or hot-dip galvanized.

G. Liquid-Tight Flexible Steel Conduit.

(1) Spirally wound continuously interlocked zinc coated strip steel with a UV stabilized polyvinyl chloride (PVC) outer jacket bonded to the conduit.

(2) Fittings shall be compression type, malleable iron, with insulated throat, either cadmium plated or hot-dip galvanized.

2.02 PULL BOXES

A. Interior pull boxes shall be constructed of sheet metal. Covers shall be secured with screws and hinges where required.

B. Exterior in-ground pull boxes shall be concrete or polymer as manufactured by Brooks, Dalworth, or Hubbell Quazite, or approved equivalent. Covers shall include identification of systems contained. Provide H20 wheel loading where in traffic bearing areas.

2.03 WIREWAYS

A. Wireways shall be made of not less than 16-gauge sheet steel for 4 inch and 6 inch square sizes and 14 gauge steel for 8 inch and 12 inch square sizes. Couplings end plates, and knockouts shall be furnished as required. Each section of wireways shall be rigidly supported.

B. The finish shall be ANSI-49 gray epoxy paint applied by a cathodic electrode position paint process over a corrosion resistant phosphate preparation for NEMA 1 wireways. Provide galvanized steel for NEMA 3R wireways. NEMA 3R wireways and auxiliary gutters are for horizontal mounting only.

2.04 FITTINGS

A. Couplings for rigid steel or intermediate conduit shall be hot dipped galvanized steel. Set screw type is not acceptable.

B. Steel or malleable iron fittings shall be used on all other raceway types except for PVC. Die-cast fittings are not allowed.

C. EMT systems shall utilize steel insulated throat, set screw connectors and steel set screw couplings in all indoor conditioned spaces. EMT system shall utilize steel insulated throat, threadless, watertight compression type connectors and steel threadless watertight compression type coupling in all non-conditioned spaces.

D. Coupling and connectors accessories and fittings for PVC coated rigid galvanized steel shall be PVC coated.

E. Liquid-tight Flexible Metal Conduit fittings shall be steel. Plastic is not acceptable.

F. Provide nylon bushing on end of all low voltage cabling system conduits (sleeves, rough-ins, etc.).

PART 3 - EXECUTION

3.01 PROVIDE CONDUIT AS FOLLOWS:

A. GENERAL

The Drawings are diagrammatic, and are intended to show the general location of outlets, devices, fixtures, and arrangement and control of circuits. The Contractor shall determine exact locations by actual measurement of the building or by reference to the Architectural Drawings.

B. Except as noted or otherwise specified, all wiring shall be installed in galvanized rigid steel or electrical metallic tubing (EMT) of the proper size to contain the number of conductors required in accordance with the latest edition of the N.E.C. Where conduit sizes are shown on the drawings, these shall take preference.

C. EMT in sizes up to 4 inches when concealed or not exposed to damage and located indoors only. (EMT is not acceptable in wet and damp location.)

D. PVC coated rigid galvanized steel shall be used for all penetrations of slab on grade.

E. Rigid galvanized steel where embedded in concrete or masonry construction, mechanical yard or in exterior/interior applications where subject to damage.

F. Schedule 40 and 80 PVC may be utilized underground or below slab where shown on the construction documents. Conduit shall not be routed in slab unless specifically noted on the plans.

G. MINIMUM SIZE: 1/2 inch. All homeruns shall be 3/4" minimum.

H. PVC coated rigid galvanized steel conduit shall be coated inside and outside.

I. Fixture whips: Refer to 26 51 00 for additional information.

J. Flexible metal shall be used for connecting rotating equipment installed in conditioned dry locations spaces, unless noted otherwise, herein.

K. LFMC shall be used for connecting rotating or vibrating equipment installed in non-conditioned spaces or damp and wet locations, and outside.

N. Of such size, and so installed that conductors may be drawn in without injury or excessive strain.

O. Where entering panels, pull boxes, junction boxes, or outlet boxes, shall be secured in place with lock nuts inside and outside, and insulated bushings inside.

P. Have Red seal type VCC or approved equal cable supports in risers, as required by N.E.C.

Q. Have ends reamed after cutting and application of die.

R. Keep conduit corked and dry during construction, and swab out before conductors are pulled.

S. Have bends and offsets made with approved tools. Bends or offsets in which the pipe is crushed or deformed shall not be installed.

T. Where not embedded in concrete or masonry, be firmly secured by approved clamps, half-straps or hangers.

U. Have O.Z. Gedney or approved equal expansion fittings where crossing building expansion joints.

V. Except in the mechanical equipment rooms, run conduit concealed, and by the shortest practicable route between outlets. Install risers, drops, and offsets necessary to avoid conflict with ductwork, piping, structural members, and similar items.

W. Install exposed conduit in mechanical rooms, and elsewhere as indicated, parallel to horizontal and vertical lines of walls, ceilings, and floors.

X. Lighting fixtures in finished areas having suspended acoustical ceilings shall be connected to outlet boxes of lighting grid by flexible metal conduit; length not to exceed eight feet (six feet if using 3/8" manufactured fixture "whips").

Y. Outlet boxes in partitions shall never be set back to back. They shall be offset to prevent undue noise transmission from room to room.

Z. Concealed conduit shall run in as direct manner as possible using long bends. Exposed conduit shall be run parallel with or at right angles to the lines of the building; and all bends shall be made with standard conduit elbows or conduit benders. Not more than equivalent of four quarter bends shall be used in any run between terminals and cabinet, of between outlet or junction boxes. Approved condulets shall be used in lieu of conduit elbows where ease of installation and appearance warrants their use and approved by the engineer. Conduit joints shall be made with approved couplings and unions.

AA. Conduits shall be continuous from outlet to outlet and from outlets to cabinets, junction or pull boxes and shall be electrically continuous throughout. Terminals of all conduits shall be provided with double lock nuts and bushing or terminated on conduit hubs. Use of running threads is prohibited.

BB. Each entire conduit system shall be installed complete before any conductors are drawn in. Every run of conduit shall be finished before covering up to guard against obstructions and omissions.

CC. Sleeves shall be placed in the forms of concrete, masonry and fire rated walls, floor slabs and beams, for the passage of conduits. Sleeves should be set in place a sufficient time ahead of the concrete work so as not to delay the work. Sleeves shall be rigid galvanized

steel and set to extend 4” above slab.

DD. All pipe penetrations through walls and concrete floors shall be fire rated by applying USG Thermafiber in the space between the concrete and the pipe. The fire rating shall be additionally sealed by using 3M brand model CP 25 or 303 fire barrier caulk and putty. All fire rating material shall be installed in accordance with manufacturer's printed instructions.

EE. All conduit shall be cleaned and swabbed to remove all foreign matter and moisture prior to pulling wire and cable. All boxes in which conduits terminate shall be cleaned of all concrete mortar and other foreign matter.

FF. Provide #30 nylon pulling line in all conduits in which permanent wiring is not installed.

GG. All conduit shall be securely fastened and supported using hot galvanized malleable iron one-hole pipe straps, clamps, hanger or other means approved by the engineer. Supports shall be as required by NEC. Tie wire shall not be used as support or securing means. Support conduit independently of ceiling hanger wire. Use all thread rods to support outlet boxes, junction boxes and conduit.

HH. When PVC conduit is routed underground, all stub-up's and 90° elbows shall be PVC coated rigid galvanized steel. Use PVC coated rigid galvanized steel when penetrating concrete on grade. Wrap in plastic tape for entire length of pipe in contact with earth and concrete, to 6” above slab.

II. Branch circuits run underground shall be run in Schedule 40 or 80 PVC conduit. Install ground wire in accordance with NEC table 250.122.

JJ. Flexible and liquid-tight flexible steel conduit shall be used for final connections to utilization equipment. Liquid-tight flexible steel conduit shall be used for all exterior locations and all interior locations subject to moisture, vibrations, rotating equipment and dry-type transformers. Refer to Section 26 02 00 for additional information concerning flexible steel conduit.

KK. Route all conduit above ground/slab unless otherwise noted on the construction documents.

LL. Contact the Architect and Engineer for an installation review before covering any below grade or above grade conduit.

MM. All new outlets shall be flush mounted. In remodeled areas where wall construction prohibits flush mounting, provide wiremold 2400 series, unless noted otherwise. Verify exact location and routing with architect before installation.

NN. Contractor shall not penetrate water proof barriers without using proper fitting to maintain barriers. This shall include exterior walls and slabs. Coordinate with Architect for proper methods.

3.02 CONDUIT CORROSION PROTECTION

A. Branch circuit conduits installed in concrete slabs on fill or grade shall be positioned in a manner to ensure complete concrete cover. In no case shall such conduits be exposed below or above the slab surfaces, or penetrate the waterproof membrane.

B. At locations where metallic conduits pass through slabs on grade or transitions below

grade, PVC coated rigid galvanized conduit shall be used.

C. Conduit installed in the air gap between the water resistant barrier and finish brick shall not exceed 2ft in length.

3.03 EXPANSION FITTINGS

A. Install approved expansion fitting in all conduit runs in excess of 150 feet or when crossing building expansion joints.

B. Make provision for expansion and shifting of metal or PVC conduits where risers occur from underground.

3.04 OUTLET AND JUNCTION BOXES

A. Provide an approved galvanized outlet box with adequate volume for number of conductors installed.

B. Provide standard galvanized switch boxes of the required number of gangs. Switch boxes where conduit is exposed shall be handy boxes or approved equal.

C. Outlet boxes for receptacles shall be similar to Universal 52151 with suitable raised cover. Receptacle boxes where conduit is exposed shall be handy boxes or approved equal.

D. Weatherproof boxes shall be FS or FD. Provide these boxes in all non-conditioned areas, exterior areas and natatoriums.

E. Outdoor boxes shall be NEMA 3R, with conduit connections made by Myers Hubs.

F. See notes and details on Drawings for special box requirements.

G. Provide junction boxes required to facilitate installation of the various conduit systems. Provide support boxes required for risers, each complete with approved cable supports as described elsewhere in this Division.

H. Outlet boxes for drywall shall be standard galvanized 4" square boxes with the appropriate device cover.

I. Provide floor outlet fittings for telephone to match fittings for duplex floor receptacles.

J. Provide 3-1/2” deep gangable masonry boxes in all masonry wall (CMU). Steel City GW-135-G or approved equal.

K. Provide shallow 4”x4” boxes in all demountable partitions.

L. Metallic boxes located in fire rated walls or partitions shall be separated by a minimum horizontal distance of 24 in. This minimum separation distance between metallic boxes may be reduced when “ Wall Opening Protective Materials” (CLIV) are installed according to the requirements of their Classification. Metallic boxes shall not be installed on opposite side of walls or partitions of staggered stud construction unless “Wall Opening Protective Materials” are installed with the metallic boxes in accordance with Classification requirements for the protective materials.

M. Junction, pull boxes, condulets, gutters, disconnects, contactors, etc., above 2-foot x 2-

foot grid ceilings shall be mounted within 18-inches of ceiling grid. Above 2-foot x 4 – foot grid ceiling they shall be mounted within 30-inches of ceiling grid. All junction box, pull box, gutter openings shall be side or bottom accessible.

3.05 THRU-WALL SEALS

A. Provide O.Z. Gedney “Thru-wall” seals for all conduits passing through concrete structure below grade, above grade, and floor penetrations below grade. These prevent moisture from entering the building.

B. Straight sleeves are not acceptable.

3.06 PULL BOXES

A. Interior pull boxes shall be provided for conduit systems as required and shall be constructed of galvanized steel of not less than gauge and size specified by National Electrical Code. Size pull boxes per NEC 314.28, minimum.

B. Where two or more feeders pass through a common pull box, they shall be tagged to indicate clearly their electrical characteristics, circuit number, and panel designation.

C. Exterior in-ground pull boxes shall have open bottoms with sand and rock beds below box for drainage of water. Provide closed bottom boxes where specified. Closed bottom boxes shall be provided with sumps for portable pump to allow for extracting water. Refer to details on the drawings.

3.07 WIREWAYS

A. Wireways shall be installed as indicated or required and locations shall be coordinated with architect.

B. Wiring in wireways shall be neatly bundled, tied and suitably tagged.

3.08 UNDERGROUND DUCTBANK SYSTEM

A. DUCT SYSTEM

1. The duct system shall consist of Schedule 80 PVC conduits encased in concrete as detailed on the drawings. Use rigid conduit for stub-ups and the last ten feet at the end of each ductbank. Duct lines shall be laid to a minimum grade of 4 inches per 100 feet and shall be free from either horizontal or vertical waves. Duct lines shall be straight unless otherwise noted on the drawings. Duct lines shall be installed so that the top of concrete in encased duct lines is not less than 24 inches below finished grade or finished paving at any point. Changes in direction or runs exceeding a total of 10 degrees, either vertical or horizontal, shall be accomplished by long sweep bends having a minimum radius of curvature of 5 feet. The long sweep bends may be made up of one or more curved or straight sections and/or combinations thereof using five degree angle couplings. Conduit shall be thoroughly cleaned before using or laying. During construction and after the duct line is completed, the ends of the conduit shall be plugged to prevent water washing mud into the conduits. Particular care shall be taken to keep the conduits clean of concrete, dirt, and any other substance during the course of construction.
2. Each single conduit of the duct bank shall be completely encased in steel

reinforced concrete as indicated. The thickness of concrete encasement indicated is the minimum thickness, and may be increased to fit the actual shape of trench.

3. Concrete for duct bank envelopes shall be standard 2000 psi concrete mix as described in Division 03.
   a. Envelopes may be poured directly against sides of trenches if the "cut" is clean, even and free of loose material. All loose dirt and extraneous material shall be removed from the trenches before and during the pouring of concrete to ensure sound envelopes. Concrete shall be carefully spaded during pouring to eliminate all voids under and between the conduit and honeycombing of the exterior surfaces. Power driven tampers of agitators shall not be used, unless specifically designed for the application, in order to ensure that the water-tightness of the conduits is not destroyed.
   b. Generally, each run of envelopes shall be poured in one continuous operation. Where more than one pour is necessary, each pour shall terminate in a vertical plane. Partial pours shall not terminate in horizontal or angular planes.

B. For normal underground installation see Section 26 02 00, paragraph 3.01 for Excavating and Backfilling.

END OF SECTION 26 05 33

SECTION 26 08 00 – COMMISSIONING OF ELECTRICAL SYSTEMS

PART 1 – GENERAL

1.1 RELATED DOCUMENTS

A. Drawings and general provisions of the Contract Documents, including General and Supplementary Conditions and Division 01 Specifications, apply to this section.

B. Related SECTIONS:

1. SECTION 01 91 00 - GENERAL COMMISSIONING REQUIREMENTS

1.2 SUMMARY

A. The commissioning of the lighting system and associated controls shall be performed by an impartial technical firm hired by the owner or shall be performed by the installing contractor if the owner has not hired a commissioning firm. The commissioning provider shall be certified under one or more of the following certifications:

1. CxA – Certified Commissioning Authority – ACG

2. CBCP – Certified Building Commissioning Professional – AEE

3. CCP – Certified Commissioning Professional – BCA

4. CPMP – Certified Process Management Professional – ASHRAE

5. BSC – Building System Commissioning Certification – NEBB

B. The commissioning provider (Commissioning authority) shall be responsible for leading the entire construction team through the commissioning process including, but not limited to, conducting the commissioning kick-off meeting, preparing the commissioning plan, preparing pre-functional checklists, preparing functional test scripts, participation in functional testing and preparation of required documentation and reports.

1.3 RESPONSIBILITIES

A. Contractor: Responsibilities of the Contractor as relate to Commissioning Process include, but are not limited to the following:

1. Facilitate coordination of Commissioning work by Commissioning authority.

2. Attend Commissioning meetings or other meetings called by Commissioning authority to facilitate the Commissioning Process.

3. Review Functional Performance Test procedures for feasibility, safety, and impact on warranty, and provide Commissioning authority with written comment on same.

4. Provide all documentation relating to manufacturer's recommended performance testing of equipment and systems.

5. Provide Operations & Maintenance data to Commissioning authority for preparation of checklists and training manuals.

6. Provide As-built drawings and documentation to facilitate Testing.

7. Assure and facilitate participation and cooperation of Sub Contractors and equipment suppliers as required for the Commissioning Process.

8. Certify to Commissioning authority that installation work listed in Pre-Functional Checklists has been completed.

9. Install systems and equipment in strict conformance with project specifications, manufacturer's recommended installation procedures, and Pre-Functional Checklists.

10. Provide data concerning performance, installation, and start-up of systems.

11. Provide copy of manufacturers filled-out start-up forms for equipment and systems.

12. Ensure systems have been started and fully checked for proper operation prior to arranging for Testing with Commissioning authority. Prepare and submit to Commissioning authority written certification that each piece of equipment and/or system has been started according to manufacturer's recommended procedure, and that system has been tested for compliance with operational requirements.
    a. Contractor shall carry out manufacturer's recommended start-up and testing procedures, regardless of whether or not they are specifically listed in Pre-Functional Checklists.
    b. Contractor is not relieved of obligation for systems/equipment demonstration where performance testing is required by specifications, but a Functional Performance Test is not specifically designated by Commissioning authority.

13. Coordinate with Commissioning authority to determine mutually acceptable date of Functional Performance Tests.

14. Provide qualified personnel to assist and participate in Commissioning.

15. Provide test instruments and communications devices, as prescribed by Commissioning authority, required for carrying out Testing of systems.

16. Proprietary test equipment required by the manufacturer, whether specified or not, shall be provided by the manufacturer of the equipment. Manufacturer shall provide the test equipment, demonstrate its use, and assist in the commissioning process. Proprietary test equipment shall become the property of the Owner upon completion of commissioning.

17. Ensure deficiencies found in the Commissioning Issues Log are corrected within the time schedule shown in the Commissioning Plan.

18. Provide Commissioning authority with all submittals, start-up instructions manuals, operating parameters, and other pertinent information related to Commissioning Process. This information shall be routed through Architect.

19. Prepare and submit to Commissioning authority proposed Training Program outline for each system.

20. Coordinate and provide training of Owner's personnel.

21. Prepare Operation & Maintenance Manuals and As-Built drawings in accordance with specifications; submit copy to Commissioning authority in addition to other

contractually required submissions. Revise and resubmit manuals in accordance with Design Professionals and Commissioning authority's comments.

22. Commissioning requires participation of this Division Subcontractors to ensure that systems are operating in manner consistent with Contract Documents. All costs associated with the participation of Contractor, Sub-Contractors, Design Professionals, and Equipment Vendors in the Commissioning Process shall be included as part of the Construction Contract.

B. Subcontractors and vendors shall prepare and submit to Commissioning Agent proposed Startup procedures to demonstrate proper installation of systems, according to these specifications and checklists prepared by Commissioning authority.

C. Electrical contractor shall provide a letter certifying the installed lighting controls meet documented performance criteria specified in the commissioning plan within 90 days of substantial completion.

1.4 COMMISSIONING PLAN

A. Commissioning Process tasks and activities:

a. Commissioning kick-off meeting: Conducted by commissioning authority and attended by construction team and design team.

b. Pre-functional checklists: Prepared by the commissioning authority and filled out by subcontractors performing the work that is applicable.

c. Site visits to review installation of applicable systems and progress of checklist documentation performed and reported by commissioning authority.

d. Functional testing: Commissioning authority shall conduct functional testing with assistance of applicable subcontractors and document successful results as well as deficiencies (issues). Functional performance testing shall demonstrate the installation and operation of components, systems, and system-to-system interfacing in accordance with plans and specifications.

e. Preliminary commissioning report: Commissioning authority shall issue a preliminary commissioning report to the owner that has results of the first round of functional testing including deficiencies discovered.

f. Systems manual: Commissioning authority shall compile the systems manual using submittal data provided by the general contractor and applicable subcontractors.

g. Final commissioning report: Commissioning authority shall issue final commissioning report documenting the entire process and final results of functional testing. Report shall include final testing and balancing report.

B. Electrical System Equipment to be tested

a. Occupancy sensors.

b. Time switch controls

c. Daylighting controls.

d. Electrical Service and Distribution System.

C. Testing functions and conditions

a. Daylighting control devices
   a. Verify the devices have been calibrated, properly located and adjusted.
   b. Loads adjust to light level set points in response to daylight.
   c. Location of calibration equipment is accessible to authorized personnel only.

b. Time switches
   a. Verify schedule, time, date and programming is accurate.
   b. Verify override time limit is set, battery is installed and switch operates the lights that are specified in the design documents.
   c. All specified lights can be turned on and off by area control switch.
   d. Manual override switch allows only the lights in the space where the switch is located turn on or remain on until next scheduled shut off.

c. Occupant sensors:
   a. Certify the sensor has been located and aimed in accordance with manufacturer recommendations.
   b. For projects with fewer than seven sensors, each sensor shall be tested.
   c. Fore projects with more than seven occupant sensors, testing shall be done for each unique combination of sensor type and space geometry. Where multiples of each combination are provided not less than 10 percent shall be tested.
   d. Verify correct operation of status indicators.
   e. Controlled lights turn off or down to the permitted level with in the required time.
   f. For auto-on sensor, the lights turn-on to the permitted level when an occupant enters space.
   g. Verify the lights are not incorrectly turned-on by movement in adjacent areas or by HVAC operation.

D. Performance criteria
   a. Daylighting controls shall maintain specified light levels within 5% of design.
   b. All time switches shall be accurate to time on cellular network devices.

PART 2 – PRODUCTS

2.1 NO PRODUCTS SUPPLIED

PART 3 – EXECUTION

3.1 GENERAL

A. This Division has startup responsibilities and are required to complete sub-systems so COMPLETE SYSTEMS are fully functional. Insuring they meet design requirements of Contract Documents. Commissioning procedures and testing do not relieve or lessen this responsibility or shift this responsibility, in whole or in part, to Commissioning Agent or Owner.

B. Coordinate with other Sub-Contractors and equipment vendors to set aside adequate time to address Pre-Functional Checklists, Functional Performance Tests, Operations & Maintenance Manual creation, Owner Training, and associated coordination meetings.

C. Commissioning authority will also conduct site inspections at critical times and issue Cx Field Reports with observations on installation deficiencies so that they may be issued by Architect as deemed appropriate.

3.2 WORK PRIOR TO COMMISSIONING

A. Complete all phases of the work so the systems can be started, adjusted, balanced and otherwise tested.

B. See pertinent specification sections in this Division, which outline responsibilities for start-up of equipment with obligations to complete systems, including all sub-systems so that they are fully functional.

C. Assist Commissioning Agent with all information pertaining to actual equipment and installation as required complete the full commissioning scope.

D. Contractor shall prepare startup procedures to demonstrate compliance with pre-functional checklists, and coordinate scheduling for completion of these checklists.

E. A minimum of 7 days prior to date of system startup, submit to Commissioning Agent for review, detailed description of equipment start-up procedures which contractor proposes to perform to demonstrate conformance of systems to specifications and Checklists.

3.3 PARTICIPATION IN COMMISSIONING

A. Attend meetings related to the Commissioning Process; arrange for attendance by personnel and vendors directly involved in the project, prior to testing of their systems.

B. Provide skilled technicians to startup and test all systems, and place systems in complete and fully functioning service in accordance with Contract Documents.

C. Provide skilled technicians, experienced and familiar with systems being commissioned, to assist Commissioning authority in commissioning process.

3.4 WORK TO RESOLVE DEFICIENCIES

A. Complete corrective work in a timely manner to allow expeditious completion of Commissioning Process. If deadlines pass without resolution of identified problems, Owner reserves the right to obtain supplementary services and/or equipment to resolve the problem. Costs thus incurred will be Contractor’s responsibility.

3.5 PRE-FUNCTIONAL CHECKLISTS (PFC)

A. Contractor shall complete Pre-Functional Checklists to validate compliance with Contract Documents installation and start-up requirements, for this Division’s systems.

B. Refer to commissioning plan for detailed list of equipment to be commissioned.

3.6 FUNCTIONAL PERFORMANCE TESTING (FPT)

A. Contractor, in cooperation with Commissioning Agent, shall conduct Functional Performance Testing to validate compliance with Contract Documents.

C. Refer to commissioning plan for detailed list of equipment to be commissioned.

B. Assist Commissioning authority in Functional Testing by removing equipment covers, opening access panels, etc. Furnish ladders, flashlights, meters, gauges, or other inspection equipment as necessary.

3.7 TRAINING

A. The following requirements are in addition to Operations & Maintenance requirements specified elsewhere in this specifications manual.

B. Contractor shall be responsible for training coordination and scheduling, and ultimately to ensure that training is completed.

C. The training agenda (plan) shall include, at a minimum, the following elements:

1. Purpose of equipment.

2. Principle of how the equipment works.

3. Important parts and assemblies.

4. How the equipment achieves its purpose and necessary operating conditions.

5. Most likely failure modes, causes and corrections.

6. On site demonstration.

D. Commissioning Agent shall be responsible for overseeing and approving content and adequacy of training of Owner personnel for all installed systems. Provide Commissioning Agent with training plan two weeks before planned training.

3.8 OPERATIONS & MAINTENANCE MANUALS

A. The following requirements are in addition to Operations & Maintenance requirements specified elsewhere in this specifications manual.

B. Contractor shall compile and prepare documentation for equipment and systems specified in this Division, and shall deliver documentation to Contractor for inclusion in Operation & Maintenance Manuals, in accordance with requirements of Division 01, prior to training Owner personnel.

C. Provide Commissioning authority with a single, electronic copy of Operation & Maintenance Manuals for review. Commissioning authority's copy of O&M manuals shall be submitted through Architect.

D. Operation and maintenance manuals shall include, service agency contact information,

maintenance requirements, controls system settings and a narrative of how each system is intended to operate, including set points.

3.9 DOCUMENTATION

A. Commissioning authority shall provide documentation of process as follows:

a. Preliminary commissioning report including test procedures, results of testing, itemization of deficiencies, deferred tests and climatic conditions required for performance of deferred tests. Preliminary commissioning report shall be issued to owner to demonstrate the first pass of testing has occurred and to demonstrate compliance with applicable codes.

b. Final commissioning report shall include the final test and balance report, final results of functional testing, disposition of deficiencies discovered during testing, including the details of corrective measures used and functional testing procedures used for repeatability of testing in the future.

END OF SECTION

SECTION 26 24 16 - PANELBOARDS

PART 1 - GENERAL

1.01 SCOPE

A. Provide panelboards as shown, scheduled and as specified herein.

B. The types of panelboards include:

1. Panelboards.
2. Power distribution panelboards.

1.02 STANDARDS

A. Products shall be designed, manufactured, tested and installed in compliance with applicable standards.

B. Products shall conform to all applicable UL standards and shall be UL-labeled.

1.03 ACCEPTABLE MANUFACTURERS

A. Provide one of the following manufacturers:

1. General Electric Company
2. Square D Company
3. Siemens
4. Eaton

1.04 SUBMITTALS

A. Shop drawings shall include, but not be limited to:

1. Cutsheets of all enclosures, circuit breakers, fusible switches, bussing, rating, schedules and all accessories clearly labeled.

1.05 REQUIREMENTS OF REGULATORY AGENCIES

A. WORK IN ACCORDANCE WITH:

1. National Electrical Code.
2. Local, municipal, or state codes that have jurisdiction.

PART 2 - PRODUCTS

2.01 MATERIALS AND COMPONENTS

A. General

Furnish and install power panelboards as indicated in the panelboard schedule and as shown on the plans. Power distribution panelboards shall be equipped with circuit breakers as shown on the schedule. Panelboards shall be thermal-magnetic, molded case circuit breakers of frame and trip ratings as shown on the schedule.

B. Busing Assembly and Temperature Rise

Panelboard bus structure and main lugs or main breaker shall have current ratings as shown on the panelboard schedule. Such ratings shall be established by heat rise tests with maximum hot spot temperature on any connector or bus bar not to exceed 50ºC. rise above 40ºC ambient. Heat rise test shall be conducted in accordance with Underwriters Laboratories Standard UL 67. The use of conductor dimensions will not be accepted in lieu of actual heat tests. All current carrying parts of the bus shall be tin or silver plated copper.

1. Bus structure shall be isolated. Bus bar connections to the branch circuit breakers shall be distributed phase or phase sequence type and shall accept bolt-on circuit breakers for all panelboards.

Provide a bare uninsulated and/or insulated ground bus and full size neutral bus as required and indicated in each panelboard enclosure.

C. Distribution Panelboards

1. Circuit breakers shall be equipped with individually insulated, braced and protected connectors. The front faces of all circuit breakers shall be flush with each other. Large, permanent, individual circuit numbers shall be affixed to each breaker in a uniform position. Tripped indication shall be clearly shown by the breaker handle taking a position between “ON” and “OFF”. Provisions for additional breakers shall be such that no additional connectors will be required to add breakers. Circuit breakers shall be of the frame size, trip setting and interrupting capacity as indicated on the drawings.

Current limiting circuit breakers shall be equal to Square D Company “I-Limiter” Series.

Circuit breakers shall be conventional interrupting capacity but in no case be less than the following symmetrical amperes RMS.

FRAME SIZE/ VOLTAGE	CONVENTIONAL INTERRUPTING CAPACITY	HIGH INTERRUPTING CAPACITY	CURRENT LIMITING
100AF/240V	10,000 AIC	22,000 AIC	200,000 AIC
225AF/240V	10,000 AIC	22,000 AIC	200,000 AIC
400AF/240V	22,000 AIC	42,000 AIC	200,000 AIC
600AF/240V	22,000 AIC	42,000 AIC	200,000 AIC
800AF/240V	42,000 AIC	65,000 AIC	200,000 AIC

D. 240 Volt Panelboards

Main breakers shall be vertically mounted. Horizontally mounted main breakers are not acceptable.

Circuit breakers shall be bolt-on thermal-magnetic, molded case circuit breakers. Breakers shall be 1, 2, or 3 pole with an integral crossbar to assure simultaneous opening of all poles in multiple circuit breakers. Breakers shall have an overcenter, trip-free, toggle-type operating mechanism with quick-make, quick-break action and positive handle indication. Handles shall have "ON", "OFF" and "TRIPPED" positions.

Circuit breakers shall be UL listed in accordance with UL standard 489 and shall be rated 240 volts ac maximum with continuous current rating as noted on the plans.

Branch circuit breakers feeding convenience outlets shall have sensitive instantaneous trip settings of not more than 10 times the trip settings of the breaker to prevent repeated arcing short resulting from frayed appliance cords. Single pole 15 and 20 ampere circuit breakers shall be UL listed as "Switching Breakers" at 120V ac and carry the SWD marking.

UL Class A ground fault circuit protection shall be provided on all receptacle circuits serving wet areas and on all 120V ac branch circuits as specified on the plans or panelboard schedule. This protection shall be an integral part of the branch circuit breaker which also provides overload and short circuit protection for branch circuit wiring. Tripping of a branch circuit breaker containing ground fault circuit interruption shall not disturb the feeder circuit to the panelboard. A single pole circuit breaker with integral ground fault circuit interruption shall require no more panelboard branch circuit space than a conventional circuit breaker. Circuit breakers shall be rated 10,000 AIC at 240V unless otherwise noted on plans.

Provide double sized neutral bus with panels served from a non-linear transformer or when indicated on drawings. This shall be a UL approved assembly.

E. Cabinets and Fronts

The panelboard bus assembly shall be enclosed in a steel cabinet with multiple knockouts. The rigidity and gauge of steel to be as specified in UL Standard 50 for cabinets. Wiring gutter space shall be in accordance with UL Standard 67 for panelboards. The box shall be fabricated from galvanized steel or equivalent rust resistant steel. All NEMA-1 panels shall have hinged front covers. The front cover shall have a door with hinges, latch and a lock. A piano hinged front “door-in-door” cover shall allow full access to the circuit breaker gutter area without having to remove the entire front cover. All panelboard locks shall be keyed alike. Circuit breaker and fusible distribution panels shall have four-piece trims. A welded circuit directory frame and card with a clear plastic covering shall be provided on the inside of the door. Provide NEMA 1 enclosure where installed indoors unless otherwise noted. Provide NEMA 3R enclosure where installed outside or in a sprinkled area.

F. Safety Barrier

The distribution panelboard interior assembly shall be dead front with panelboard front removed. Main lugs or main breakers shall have barriers on five sides. The barrier in front of the main lugs shall be hinged to a fixed part of the interior. The end of the bus structure opposite the mains shall have barriers.

G. Integrated Equipment Short Circuit Rating

Each panelboard, as a complete unit, shall have a short circuit current rating equal to or greater than the integrated equipment rating shown on the panelboard schedule or on the plans. This rating shall be established by testing with the over-current devices mounted in the panelboard. The short circuit tests on the over-current devices and on the panelboard structure shall be made simultaneously by connecting the fault to each over-current device with the panelboard connected to its rated voltage source. Method of testing shall be per Underwriters Laboratories Standard UL 67. The source shall be capable of supplying the specified panelboard short circuit current or greater. Testing of panelboard over-current devices for short circuit rating only while individually mounted is not acceptable. Also, testing of the bus structure alone is not acceptable. Panelboards shall be marked with their maximum short circuit current rating at the supply voltage and shall be UL listed.

PART 3 - EXECUTION

3.01 INSTALLATION

A. General: Install panelboards, including electrical connections, in accordance with manufacturer's written instructions, NEC and recognized industry practices.

B. Conduits: Stub up three one inch conduits to an accessible location above the ceiling for each recessed panelboard.

3.02 IDENTIFICATION

A. Nameplate: Each panelboard shall have an engraved bakelite nameplate. Nameplates shall be white with black letters and show panel designation. Nameplates shall be attached with stainless steel screws. Refer to Section 26 02 00, paragraph 2.05(C).

B. Directory Card: Place a neat, carefully typewritten directory card identifying the load served by each branch circuit in the frame on the panel door, under a clear plastic cover. Spares and spaces shall be written with erasable pencil for future use.

C. Replacement Components: Nameplate shall identify replacement components.

END OF SECTION 26 24 16

SECTION 26 27 26 – WIRING DEVICES

PART 1 – GENERAL

1.1 SCOPE

A. Provide wiring devices as shown; scheduled, required and as specified.

B. The types of wiring devices required include:

1. Receptacles
2. Switches
3. Coverplates

1.2 STANDARDS

A. NEMAWD-1

B. NEMA WD-5

C. UL

D. Federal Spec WC-596-F and WS-896

1.3 ACCEPTABLE MANUFACTURERS

A. Hubbell

B. Leviton

C. Pass & Seymour (P&S)

1.4 SUBMITTALS

A. Shop drawings shall include but not be limited to:

1. Cut sheets of all devices indicating NEMA configuration, rating, materials, color, and all accessories.
2. Cut sheets of all coverplates indicating materials, color and any engraving specified on drawing or in the specifications.

1.5 REQUIREMENTS OF REGULATORY AGENCIES WORK IN ACCORDANCE WITH:

A. National Electric Code.

B. Local, municipal, or state codes that have jurisdiction.

PART 2 – PRODUCTS

2.1 MATERIALS AND COMPONENTS

A. GENERAL
1. Provide factory assemble wiring devices with the rating type and color as required and specified for the service indicated.
2. Provide matching one-piece multiple gang plates where switches are ganged.
3. Provide wall plates for each receptacle furnished.

4. Architect reserves the right to select wiring device styles and colors to match wall finish.
5. Wall plates shall be of same manufacturer as devices.

2.2 SWITCHES

A. Provide specification grade White decora style rocker switches where indicated on the Drawings. Coordinate exact locations with architect.

B. Wall switches shall be 20 Amp, 120-277 volt and shall be Hubbell Decorator Series, Leviton Decora, or Pass & Seymour Decorator, as follows:
1. SINGLE POLE SWITCHES: Leviton 5621-2, P&S 2621, Hubbell DS120
2. DOUBLE POLE SWITCHES: Leviton 5622-2, P&S 2622, Hubbell DS220
3. THREE WAY SWITCHES: Leviton 5623-2, P&S 2623, Hubbell DS320
4. FOUR WAY SWITCHES: Leviton 5624-2, P&S 2624, Hubbell DS420
5. MOMENTARY CONTACT SWITCHES: Hubbell HBL1557, Leviton 1257, P&S 1251
6. THREE POSITION, TWO CIRCUIT MAINTAINED CONTACT SWITCHES: Leviton 1285, Hubbell HBL 1385, P&S 1225

C. 120/277V Line Voltage Dimmers: Provide Lutron DIVA or Maestro series; Leviton or as shown on drawings. Wall box dimmers shall be sized to handle the load. Where fluorescent or LED dimming ballasts/drivers are to be used, coordinate wall box dimmerwith ballast/driver manufacturer.

D. Light Handle Switches: Provide Leviton 1221-7LX, Hubbell HBL1221-lLx, P&S PS20AC1-ISL 20A, 120-277V, Industrial Grade lighted handles (lighted when off; or appropriate lighted when “on” toggle, where indicated) to switch loads where noted on the drawings. Use Leviton 1221-7PX, Hubbell HBL1221-PLx, P&S PS20AC1-CPLx for lighted when on.

2.3 RECEPTACLES

A. Provide specification grade, Decora type White receptacles where indicated on the drawings. Coordinate exact location with architect.

B. Receptacles shall be Hubbell StyleLine Decorator Series, Leviton Decora or Pass & Seymour Decorator as follows:

1. Duplex 20A-125V-self grounding: (NEMA configuration 5-20R): Hubbell DR20, Leviton 16362, or P&S 2091.
2. Simplex 20A-125V-Self Grounding: (NEMA configuration 5-20R): Leviton 1635 or P&S 26361.
3. Isolated ground duplex, 20A-125V: (Orange, NEMA configuration 5-20R) Hubbell IG20DRX, Leviton 16362-IG or P&S IG8300XSP (where X denotes color).
4. Ground fault circuit interrupter (GFCI) receptacle 20A-125V; GF-5352. (NEMA Configuration 5-20R, shall incorporate self-test, auto monitoring technology and features which will lock-out or render the device incapable of being reset if ground fault protection is compromised, with "Feed through" connectors capable of protecting connected downstream receptacles on a single circuit, and of being installed in a 2-3/4" deep outlet box without adapter, Hubbell GFRST20, Leviton GFNT2 or P&S 2097.
   Install Hubbell GFTRST20, Leviton GFTR2 or P&S 2097TR Tamper Resistant type for locations requiring Tamper Resistant installations.
5. Tamper resistant receptacles 20A-125V: (NEMA configuration 5-20R): Hubbell DR20TR, Leviton 16262-SG, P&S TR26362-HIGH LTG.
6. Surge Protection Duplex Receptacles 20A-125V, (NEMA 5-20R) Hospital grade

to include LED light and audible alarm: Hubbell HBL8362SA, Leviton 8380, or P&S 8300SP

7. Special equipment receptacles shall be coordinated with owner/manufacturer requirements and the correct and appropriate receptacle and coverplate shall be installed.
8. USB Charger types receptacles to be Hubbell, 20A, 125V AC Hospital Grade, Tamper Resistant, with two USB Type 2.0 Ports 3.0 Amp, 5V DC, Decorator Type duplex receptacle. Hubbell USB8300A5 or equal by other approved wiring device manufacturers.
9. ARC Fault circuit interrupter receptacles shall be Hubbell AFR20TR.
10. Ground fault circuit interrupter/ARC Fault dual function receptacles shall be Hubbell AFGF20TR.

2.4 PLATES

A. Furnish and install plates on all outlet boxes. Oversize (Jumbo) plates are not acceptable.

B. Plates shall be 302/304 smooth stainless steel.

C. Provide Hubbell WP Series, Bell, Carlon or Leviton NEMA 3R weatherproof coverplates on all exterior wiring devices. Enclosure shall be suitable for wet locations when in use.

PART 3 – EXECUTION

3.1 WIRING DEVICE MOUNTING HEIGHTS

A. Unless noted to the contrary on plans, or directed otherwise during the progress of the Work, wiring devices shall be set as follows:

1. Switches 42" above finished floor.
2. Wall mounted receptacles shall be installed vertically at 15 inches to the bottom outlet above finished floor unless otherwise noted or as required by local codes.
3. Wall telephone outlets shall be mounted 15 inches to the bottom above finished floor unless otherwise noted. Mount even with wall mounted receptacles.
4. At locations above counters, set devices at 6 inches above to the centerline counter tops, verify exact mounting height with the architect.

3.2 INSTALLATION (Refer to 26 05 33 for outlet box specifications).

A. Wall switches shall be set in a suitable steel box and shall be installed on the strike side of the door as finally hung, whether so indicated on the Drawings or not.

B. Receptacles shall be installed in a suitable steel box.

C. The Architect reserves the right to relocate wiring device up to a distance of 5 feet from the location shown, before rough-in, without additional cost.

D. Provide multi-gang device covers at locations where devices gang together.

E. Device locations are indicated schematically on the drawings along with the type and mounting height. Final locations and mounting heights shall be coordinated with the Architect on the jobsite, and with shop drawings of equipment; including equipment to be furnished and installed by the Owner. Devices installed in walls covered with vinyl, fabric wallpaper or other special finishes shall be coordinated and verified with the Architect on the job-site.

F. Stranded wire termination to switches, receptacles, devices and miscellaneous control devices shall be with an approved solderless terminal if clamp type securing is not possible (i.e. Sta-Con crimp on fork tongue connectors; Burndy Type TP-F).

G. Provide keyed switches in all common areas not monitored by the faculty (i.e. gym, corridors, cafeteria, commons, or natatoriums).

H. All 20A, 120V receptacles in food service areas shall be GFCI.

I. Provide ARC Fault circuit interrupters (AFCI) as required to comply with 210.12 of the N.E.C. This shall include but not limited to dwelling units and dormitory's. AFCI breakers may be used.

J. Provide ground fault circuit interrupter (GFCI)/ARC Fault circuit interrupter (AFCI) dual function receptacles to comply with 210.8, 210.12 and 406.4 of the N.E.C.

END OF SECTION 26 27 26

SECTION 26 28 10 - CLASS J FUSES

PART 1 – GENERAL

1.01 SCOPE

A. Provide fuses as shown and scheduled and indicate by this specification section and other specifications sections.

B. The type of fuses include:

1. 600 volt current limiting.
2. 250 volt current limiting.

1.02 STANDARDS

A. ANSI

B. UL

1.03 ACCEPTABLE MANUFACTURERS

Provide fuses manufactured by Bussmann manufacturing.

1.04 SUBMITTALS

A. Shop drawings shall include, but not be limited to:

1. Cutsheets of all fuses showing ratings and fuse curves.

1.05 REQUIREMENTS OF REGULATORY AGENCIES

A. WORK IN ACCORDANCE WITH:

1. National Electrical Code.
2. Local, municipal, or state codes that have jurisdiction.

PART 2 - PRODUCTS

2.01 CURRENT - LIMITING FUSES

A. General: Provide 200,000 amp interrupting capacity current limiting fuses of the ampacity and voltage indicated and scheduled.

B. Mains, Feeders and Branch Circuits

1. Circuits 601 to 6000 ampere shall be protected by current limiting BUSSMANN HI-CAP Time Delay Fuses KRP-C. Fuses shall employ "O" ring as positive seals between the end bells and the glass melamine fuse barrel. The terminals shall be peened. Fuses shall be time-delay and must hold 500% of rated current for a minimum of 4 seconds, clear 20 times rated current in .1 seconds or less and be listed by Underwriters' Laboratories Inc., with an interrupting rating of 200,000 amperes RMS symmetrical. The fuses shall be UL Class L.
2. Circuits 0 to 600 ampere shall be protected by current limiting BUSSMANN LOW-PEAK Dual Element Fuses LPJ. All dual-element fuses shall have separate overload and short-circuit elements. Fuse shall incorporate a spring activated

thermal overload element having a 284 degree Fahrenheit melting point alloy and shall be independent of the short-circuited clearing chamber. The fuse must hold 500% of rated current for a minimum of 10 seconds and listed by Underwriters' Laboratories Inc., with an interrupting rating of 200,000 amperes RMS symmetrical. The fuses shall be UL Class J.

3. Motor Circuits - All individual motor circuits rated 600 amperes or less shall be protected by BUSSMANN LOW-PEAK LPJ. The fuses for 1.15 service factor motors shall be installed in ratings approximately 125% of motor full current except where high ambient temperatures prevail, or where the motor drives a heavy revolving part which cannot be brought up to full speed quickly, such as large fans. Under such conditions the fuse should be 150% to 200% of the motor full load current. Larger H.P. Motor shall be protected by BUSSMANN Type KRP-C HI-CAP Time-Delay Fuses of the rating shown on the drawings. 1.0 service factor motors shall be protected by BUSSMANN LOW-PEAK Dual-Element Fuses LPJ installed in ratings approximately 115% of the motor full load current except as noted above. The fuses shall be UL Class LPJ or L. Circuit breaker panels shall be protected by BUSSMANN LOW-PEAK Dual-Element LPJ as shown on the drawings. The fuses shall be UL Class J.

2.02 SPARES

Upon completion of the building the contractor shall provide the owner with spare fuses as shown below.

A. 10% (minimum of 3) of each type and rating of installed fuses shall be supplied as spares.

B. BUSSMANN spare fuse cabinets - Catalog No. SFC - shall be provided to store the above spares.

PART 3 - EXECUTION

3.01 INSTALLATION

A. Fuses: Fuses shall not be installed until equipment is ready to be energized. This measure prevents fuse damage during shipment of the equipment from the manufacturer to the job-site or from installation. All fuses shall be furnished and installed by the electrical contractor. All fuses shall be of the same manufacturer.

B. All fuses shall be installed in fuse holders.

END OF SECTION 26 28 10

SECTION 26 28 16 - SAFETY AND DISCONNECT SWITCHES

PART 1 - GENERAL

1.01 SCOPE

A. Provide safety and disconnect switches as shown, scheduled and as specified herein.

1.02 STANDARDS

A. Products shall be designed, manufactured, tested and installed in compliance with applicable standards.

1. NEMA KS1 - Enclosed switches
2. Federal specification W-S-865C-Heavy duty switches

B. Products shall conform all applicable UL standards, including UL98 (standard for safety, enclosed and dead front switches) and shall be UL-labeled.

1.03 ACCEPTABLE MANUFACTURERS

A. Provide one of the following manufacturers:

1. General Electric Company
2. Square D Company
3. Siemens
4. Eaton

1.04 SUBMITTALS

A. Shop drawings shall include, but not be limited to:

1. Cutsheets of switches with ratings, physical dimensions and all accessories clearly labeled.

1.05 REQUIREMENTS OF REGULATORY AGENCIES

A. WORK IN ACCORDANCE WITH:

1. National Electrical Code.
2. Local, municipal, or state codes that have jurisdiction.

PART 2 - PRODUCTS

2.01 GENERAL

A. Furnish and install heavy duty type safety switches with the number of switched poles as indicated on the plans and specifications. All safety switches shall be NEMA Heavy Duty Type HD, and Underwriters Laboratories listed.

2.02 MATERIALS AND COMPONENTS

A. Switch Interior

All switches shall have switch blades that are fully visible in the "OFF" position when the door is open. Switches shall have removable arc suppressor where necessary, to permit

easy access to line side lugs. Lugs shall be front removable and UL listed for 60ºC and 75ºC copper or aluminum cables. All switches blades and contacts shall be plated copper. Adjust fuse block to accept Class J fuses.

B. Switch Mechanism

Switches shall have a quick-make and quick-break operating handle and mechanism, which shall be an integral part of the box, not the cover. Padlocking provisions shall be provided for locking in the "OFF" position with at least three padlocks. Switches shall have a dual cover interlock to prevent unauthorized opening of the switch door when the handle is in the "ON" position, and to prevent closing of the switch mechanism with the door open. A means shall be provided to permit authorized personnel to release the interlock for inspection purposes. Handle position shall indicate if switch is "ON" or "OFF".

C. Neutral

Provide a solid neutral with the safety switch where a neutral is present in the circuit.

D. Ratings

Switches shall be horsepower rated for ac and/or dc as indicated by the plans. The fused switches shall have Class R rejection fuse clips or adjusted for Class J fuses. UL listed short circuit ratings of the switches, when equipped with Class R fuses, shall be 200,000 symmetrical amperes.

E. Enclosures

1. Indoor switches shall be furnished in NEMA 1 enclosures.
2. Outdoor switches, switches located in wet areas or sprinkled areas shall be furnished in NEMA 3R enclosures.
3. Switches installed in wet areas such as cooling tower areas shall be NEMA 4X stainless steel or fiberglass reinforced polyester.
4. Switches installed in kitchens shall be stainless steel.
5. Switches installed in areas of a corrosive nature and subjected to salt air shall be NEMA 4X stainless steel or fiberglass reinforced polyester.

F. Electrical Interlock Contacts

Provide electrical interlock contacts on all disconnect switches serving motors in which remote VFDs are serving the motor. Provide conductors from contacts to the safe circuit inside the VFD. De-energizing the disconnect switch shall signal VFD to stop.

G. Service Entrance

Switch shall be suitable for use as service entrance equipment when installed in accordance with the National Electrical Code.

H. Grounding

Provide a grounding bar with each safety switch.

PART 3 - EXECUTION

3.01 GENERAL

A. Install safety and disconnect switches, including electrical connections, and fuses in accordance with manufacturer's written instructions, NEC and recognized industry practices.

B. Location: Install switches within sight of controllers.

C. Hubs: Provide bolt-on hubs for rainproof or wet area applications.

D. Infrared Scanning: After Substantial Completion by not more than 2 months after Final Acceptance, perform an infrared scan of each switchboard. Remove fronts if not equipped with viewing ports to make joints and connections accessible to a portable scanner.

3.02 IDENTIFICATION

A. Nameplate: Each disconnect switch shall have an engraved bakelite nameplate. Nameplates shall be white with black letters and show equipment served. Nameplates shall be attached with stainless steel screws.

END OF SECTION 26 28 16

SECTION 26 29 01 – MANUAL MOTOR STARTERS

PART 1 - GENERAL

1.01 SCOPE

A. Provide manual motor starters as shown, scheduled and as specified herein.

B. All integral motor starters furnished under Division 23 requirements shall be installed under Division 26 requirements unless factory mounted or noted otherwise on the plans.

1.02 STANDARDS

A. Products shall be designed, manufactured, tested and installed in compliance with applicable standards.

B. Products shall conform to all applicable UL standards and shall be UL-labeled.

1.03 ACCEPTABLE MANUFACTURERS

A. Provide one of the following manufacturers:

1. General Electric Company
2. Square D Company
3. Siemens
4. Eaton

1.04 SUBMITTALS

A. Shop drawings shall include, but not be limited to:

1. Cutsheets of all enclosures, switches, overloads, ratings, and all accessories clearly labeled.

1.05 REQUIREMENTS OF REGULATORY AGENCIES

A. WORK IN ACCORDANCE WITH:

1. National Electrical Code.
2. Local, municipal, or state codes that have jurisdiction.

PART 2 - PRODUCTS

2.01 MATERIALS

A. GENERAL: Refer to the Drawings for starter requirements for each motor.

2.02 MANUAL MOTOR STARTERS

A. GENERAL: Manual starters shall consist of a manually operated toggle switch equipped with melting alloy type thermal overload relay. Thermal unit shall be of one-piece construction and interchangeable. Starter shall be inoperative if thermal unit is removed. Contacts shall be double break, silver alloy, visible from both sides of starter. Manual starters shall be square "D" class 2510 or 2512 or approved equal. Provide the size and number of poles shall be as shown and required by equipment served. Furnish red pilot light as indicated.

B. ENCLOSURES: All manual motor starter enclosures shall be NEMA 1, general purpose enclosures, unless shown otherwise. Provide NEMA 3R enclosure where installed outside or in a sprinkled area.

PART 3 - EXECUTION

3.01 INSTALLATION OF MOTORS

A. GENERAL: Mount electric motors which are not factory installed.

B. MOTOR CONNECTIONS: Provide electrical and grounding connections to motors as indicated. Connections as follows:

1. Not less than 18-inch length of liquid-tight flexible steel conduit, extending from motor connection box to motor branch circuit conduit on outdoor and wet locations. Provide flexible steel conduit for inside dry locations.
2. Install connections mechanically secure, assuring electrical continuity, proper and effective grounding.

C. INSTALLATION OF MOTOR STARTER

1. Install motor starters in accordance with the manufacturer's written instructions, the applicable requirements of the NEC and the NECA's "Standard of Installation", and recognized industry practices to ensure that products serve the intended function.
2. Combination starter disconnects and starters mounted in ceiling plenums shall be installed 18” above ceiling grid or adjacent to equipment where maintenance access is provided.

END OF SECTION 26 29 01

SECTION 26 29 26 - MISCELLANEOUS ELECTRICAL CONTROLS AND WIRING

PART 1 - GENERAL

1.01 GENERAL REQUIREMENTS

A. The requirements of the General Conditions and Supplementary Conditions apply to all work herein.

1.02 SCOPE

A. Provide the various miscellaneous control devices, wiring and additional branch circuits as required, shown and specified.

B. The types of miscellaneous control devices and wiring include but not limited to the following.

1. Contactors
2. Relays
3. Photocells
4. Lighting Controls
5. Time switches
6. Additional control wiring and safety devices as shown and specified.
7. Connect power from fire alarm relays to starters to shut down air handling units.
8. Door bells and/or buzzers

C. WORK SPECIFIED ELSEWHERE:

1. Various control devices, of an electrical nature, for the safe operation and temperature control of the heating, ventilating, air conditioning and plumbing systems provided under Division 23.
2. All control wiring and conduit shall be furnished under Division 23. All power wiring 120 Volt or larger shall be provided by Division 26.
3. Refer to building controls specification, Division 23 for scope of work required to be performed by Division 26 (electrical contractor).

1.03 REQUIREMENTS OF REGULATORY AGENCIES

A. WORK IN ACCORDANCE WITH:

1. National Electrical Code.
2. Local municipal or state codes that have jurisdiction.

1.04 ACCEPTABLE MANUFACTURERS

A. Provide one of the following manufacturers:

1. LIGHTING CONTACTORS AND RELAYS
   a. General Electric
   b. Square D Company
   c. Automatic Switch Company
2. PHOTOCELLS AND TIME SWITCHES
   a. Tork, Inc.
   b. Intermatic time controls
   c. AMF paragon
3. OCCUPANCY SENSORS

a. Wattstopper
b. Leviton
c. Hubbell
d. Acuity Brands

1.05 SUBMITTALS

A. Shop drawings shall include, but not be limited to:

1. Cutsheets of all enclosures, contactors, lighting control sensors, rating, schedules and all accessories clearly labeled. Coordinate color finish of wall sensors with Section 26 27 26 - Wiring Devices, and the Architect.
2. Provide Lighting Control Shop Drawings for an installation guide and commissioning of the lighting controls system. Include power packs, sensor control (line voltage and low voltage) diagrams, schedules, and sequence of operation. Ensure compatibility with Lighting products supplied and installed.

PART 2 - PRODUCTS

2.01 MATERIAL

A. GENERAL: This Section shall outline the basic installation of electric devices, conduit, boxes, fittings, and wiring required for complete interconnection of several systems, this may not reflect every required appurtenance. It does not cover integral parts of mechanical equipment.

B. CONTACTORS AND RELAYS: Provide control wiring, contactors, and relays with the ampere-rating and number of poles as shown, specified, and required for a complete and functioning system:

1. Rated at 600 volts, 60 hertz.
2. Continuously rated contacts for all types of ballast and tungsten lighting, resistance and motor loads. Contacts shall be sized as scheduled or noted.
3. Shall have totally enclosed, double-break silver-cadmium-oxide power contacts. Auxiliary arcing contacts are not acceptable. Contact inspection and replacement shall be possible without disturbing line or load wiring.
4. The contactor shall have straight-through wiring with all terminals clearly marked.
5. The contactor shall be approved per UL508 and/or CSA, and be designed in accordance with NEMA ICS2-21 1B.
6. They shall be industrial-duty rated for applications to 600 volts maximum.
7. The contactor shall have provisions for factory or field addition of:
   a. Four (4) N.O. or N.C. auxiliary contacts rated 6 amperes continuous at 600 volts.
   b. Single or double circuit, N.O. or N.C., 30 or 60 ampere 600 volt power-pole adder.
8. The contactor shall have a NEMA type 1 enclosure unless otherwise noted.
9. Control power to the contactor 120V control circuit shall be provided from the nearest panelboard 120V circuit. If the 120V control power circuit is not shown, provide a control power transformer for 120 volt control power and a 120 volt coil when required for control. Provide primary and secondary fuses on the control power transformer.
10. Mechanically Held Lighting Contactors - Coil-clearing contacts shall be supplied so that the contactor coils shall be energized only during the instance of operation. Both latch and unlatch coils shall be encapsulated. All contactors shall be mechanically held unless noted otherwise on the plans.
11. Provide 2-wire or 3-wire control modules as required to operate lighting

contactors.

12. Provide hand-off-automatic controls (H-O-A) for each lighting contactor.
13. Provide relays and contactors to shut down air handling units.

C. PHOTOCELLS: Provide a specification grade self-contained, weatherproof, photoelectric control that shall be mounted on an FS type weatherproof junction box. The photocell shall:

1. Switch "ON" at dusk and "OFF" at dawn.
2. Adjustable from 2 to 50 foot candles.
3. Rated at 2000 watts.
4. Use 1" diameter cadmium sulphide cell.
5. Have a 2 minute delay to prevent false switching.

D. TIME SWITCHES: Provide a 7-day, 2-channel digital, programmable time clock with astronomic correction and battery back-up feature installed in a NEMA 3R/12 enclosure.

E. Control wiring shall be not less than #14 AWG type TW, and shall be color coded and labeled with Brady markers throughout. Bundle multiple conductors with Ty-Raps.

F. OCCUPANCY SENSORS: Occupancy sensors shown on drawings are for reference only. Quantity and location of sensors in each space shall be provided as recommended by manufacturer. Provide all accessories necessary for complete and functioning system including but not limited to: power packs, photocells, override switches. Provide occupancy sensors as follows:

1. Ceiling Mounted Occupancy Sensors:
   a. Line Voltage Sensor: Wattstopper #DT-355 dual tech sensor or equal.
   b. Low Voltage Sensor: Wattstopper #DT-300 dual tech sensor or equal with BZ150 Power Pack and LVSW101 Digital Switch.
2. Wall Mounted Occupancy Sensors (large room):
   a. Low Voltage Sensor: Wattstopper #DT-200 dual tech sensor or equal with BZ150 Power Pack and LVSW101 Digital Switch.
3. Wall Mounted Occupancy Sensors (private office): 120/277V
   a. Single Relay: Wattstopper #DSW-301 dual tech wall sensor or equal.
   b. Dual Relay: Wattstopper #DSW-302 dual tech wall sensor or equal.
4. Digital Low Voltage 2-button Switch Dual Tech Occupancy Sensor:
   a. Low Voltage: Wattstopper #LMDW-102 or equal.
5. Digital Low Voltage 1-button Dimmer Switch:
   a. Low Voltage: Wattstopper #LMDM-101 or equal.
6. Digital Low Voltage Dimmer/Occupancy Sensor Switch:
   a. Low Voltage: Wattstopper #DW-311 or equal.

G. Door Bells/Buzzers
   1. At Main Entry exterior door
      a. Provide door button and conduit pathway to bell as shown on plan
      b. Provide Edwards 340 series Adaptabel AC Bell
         1. Operable at 120v, 60hz
         2. If step-down xfmr is required, provide 1900 deep rough-in box and install transformer behind bell
         3. Bell height shall be 96” AFF.

PART 3 - EXECUTION

3.01 Install miscellaneous electrical controls and wiring to provide a functioning system.

3.02 DIVISION 22, 23, 27, AND 28 MISCELLANEOUS POWER AND CONTROLS

A. Install electrical devices not an integral part of mechanical equipment providing conduit, boxes, fittings, wiring, and other devices.

B. Electrical contractor is responsible for providing all line voltage power to devices indicated by controls contractor that require electrical power to operate. Electrical contractor shall terminate line voltage power to termination points indicated by control contractor. Electrical contractor shall coordinate with controls contractor to determine sizing and quantities of line voltage circuits to adequately power control devices. Electrician is to obtain circuits from nearest low voltage panel using spare circuits provided, if device requires power not already available.

C. Provide GFCI receptacle with weather proof cover within 25 feet of all heating, air conditioning and refrigeration equipment.

3.03 Install contactor and relays in electrical/mechanical rooms unless otherwise noted.

3.04 Install photocells on the roof unless otherwise directed by the architect. Coordinate any roof penetrations with all other trades and shield from other light sources.

3.05 Provide miscellaneous connections for signs and other furnished equipment as shown on the Drawings.

3.06 Provide documentation that occupancy sensors have been installed per specification and tested to function correctly. Identify any defective devices, replace and retest. Obtain time delay setting from the Owner's representative.

END OF SECTION 26 29 26

SECTION 26 32 13 16 NATURAL GAS ENGINE-DRIVEN STANDBY ENGINE GENERATING SYSTEM – FIRE STATION

PART 1 – GENERAL

1.1 GENERAL REQUIREMENTS

A. The requirements of the General Conditions and Supplementary Conditions apply to all work herein.

B. SCOPE

1. Provide a standby electric generating system manufactured by CAT DG200 GC series electric set rated for continuous standby service at 200 kW, 250 kVA at 0.8 power factor, 3-phase, 208Y120VAC, 60 cycle. The system shall be a package of new and current equipment consisting of:
   a. A natural gas engine driven electric plant in a weather-protective housing to provide emergency electric power. Automatic transfer switch(es) to provide automatic starting and stopping of the plant and switching of the load for separate transfer switch section.
   b. Mounted accessories as specified.
   c. Control wiring.
   d. Alternator oversized as shown.

1.2 PERMITS, TEST INSPECTIONS

A. This system shall be completely built, tested and shipped by a manufacturer who has been regularly engaged in the production of such equipment for the past ten years and who has parts and service facilities locally available so there is one source of supply and responsibility. The performance of the electric plant shall be certified by an independent testing laboratory as to the plant's full power rating and voltage and frequency regulation. The complete system shall bear a seal showing that it is prototype test supported.

1.3 REQUIREMENTS

A. Level 1 applications are legally-required emergency systems.

B. The electric generating system must meet all requirements of NFPA 110 including design specification, prototype tests, one-step full-load pickup, and installation acceptance. Engine-generator system to provide source of power for Level 1 applications.

1.4 STANDARDS

A. Equipment shall meet the latest versions of the following codes:

1. N.E.C.

2. NFPA 101, 110, 37, 99, 30

3. IEEE - 446, 587

4. NEMA - MG1, ICS

5. ANSI

6. UL – 1008

7. MIL-STD 461 C – Part 9, IEC 801.2, IEC 801.3, IEC 801.5, IEC 1000-4-2,3,6 – RFI and EMI Performance.

8. UL 2200

1.5 SUBMITTALS

A. Shop drawings shall include but not be limited to:

1. Catalog cut sheets with all equipment, fuel tank, accessories and devices including all ratings.

2. Interconnection wiring diagrams.

3. Complete bill of materials.

4. Certified performance tests.

B. Operation and Maintenance Data

1. Submit under provisions of Division One.

2. Furnish three copies of the manuals and books listed below in substantial three-ring binders for each unit:
   a. Operating Instructions: Describe and illustrate all switchgear controls and indicators and engine and general controls. Include instructions for operating transfer switch equipment under normal and emergency conditions when engine generator is running.
   b. Parts Books: Illustrate and list all assemblies, subassemblies and components, except standard fastening hardware (nuts, bolts, washers, etc.).
   c. Preventative Maintenance Instructions: Describe the daily, weekly, monthly biannual and annual maintenance requirements and include a complete lubrication chart.
   d. Routine Test Procedures: Describe procedure for engine, radiator, all electronic and electrical circuits, and the generator.
   e. Troubleshooting Chart: Describe and list all troubles, probable causes, and suggested remedies.
   f. Recommended Spare Parts List: List all consumables anticipated to be required during routing maintenance and testing. List special tools, maintenance materials and replacement parts.
   g. Wiring Diagrams and Schematics: Show function of all electrical components.

1.6 DELIVERY, STORAGE AND HANDLING

A. Deliver, store, protect and handle products to site under provisions of Division One.

B. Accept units on site on skids. Inspect for damage.

C. Protect equipment from dirt and moisture by securely wrapping in heavy plastic.

1.7 ACCEPTABLE MANUFACTURERS

A. Provide products complying with these specifications and produced by one of the following:

1. Caterpillar

1.8 ACCEPTABLE SUPPLIERS

A. All equipment provided shall be supplied by an authorized distributor of the manufacturer who has been continuously engaged in the distribution of industrial grade Power System products for a minimum of 15 years. The supplier shall provide initial start-up services, conduct field acceptance testing, and warranty service. The supplier be authorized to perform warranty service on all products provided.

B. Within 50 mile of the job site, the supplier shall maintain; a minimum of 6 factory trained and qualified field technicians; a proper supply of spare parts for the supplied equipment; a shop with overhaul capabilities; and be able to provide 24 hour, 7 day per week, 365 day per year field service capability.

PART 2 – PRODUCTS

2.1 ENGINE

A. The engine shall be radiator cooled, natural gas fueled, 4 cycle, 6 cylinder. It shall have a total piston displacement of not less than 864 cubic inches and develop not less than 302.0 brake horsepower at its operating speed. A radiator air discharge duct flange shall be provided for a connecting duct to allow all heated air and gases to be discharged out of the building or enclosure through one opening. The radiator cooling system shall be rated at 40 degrees C. ambient against an external restriction of 0.5 inch water column. Engine cooling air requirements shall not exceed 9,432 CFM.

B. The engine shall be of 1-piece cast alloy iron construction with cast alloy iron heads. Valves shall be overhead and free to rotate. Valves shall be hard chrome-cobalt alloy faced with replaceable valve seat inserts of solid chrome-cobalt alloy. The crankshaft shall be forged steel. main bearings between all cylinders. The connecting rods shall be forged steel with connecting rod bearings. Fuel injection system with automatic fuel shut-off, automatic positive head maintained on injectors, and a reusable air element air cleaner; mechanical fuel transfer pump with filters. Provide full-flow, replaceable, oil filter with bypass; oil pressure gauge shall be included.

C. The engine shall be equipped with adjustable isochronous electronic governor (speed regulation 0.25 percent, no load to full load); main output circuit breaker, fuel carburetor system with automatic fuel shut-off and a reusable air element air cleaner; natural gas fuel train. Provide full-flow, replaceable oil filter with bypass; oil pressure gauge shall be included. Provide 12 volt electrical system and starting shall be a 12 volt electric starter.

D. 120 VAC thermostatically controlled water jacket heater system (1500 watts) shall be provided. Contractor shall install normal power to the heater.

E. Provide the following safety shutdown fault devices:

1. Low oil pressure

2. Over-speed

3. Over-crank

4. High temperature (with low water level)

F. Provide the following alarms:

1. Low engine temperature (indicating jacket heater malfunction)

2. Marginally high engine temperature

3. Marginally low oil pressure

4. Flashing for control switch in "Stop" position.

G. The engine shall be equipped with adjustable electronic governor isochronous (speed regulation 0.25 percent, no load to full load) with controls

H. Generator main circuit breaker: set-mounted and wired, UL listed, molded case type with electronic trip unit, rated at 100% of 800 amps, 3 pole, 208 volts. Submittals shall demonstrate that the circuit breaker provides proper protection for the alternator by a comparison of the trip characteristic of the breaker with the thermal damage characteristic of the alternator. Field circuit breakers shall not be acceptable for generator overcurrent protection. (Lugs on breaker shall match “ATS” lugs)

I. Provide 12 volt electrical system and starting shall be a 12 volt electric starter.

2.2 ALTERNATOR

A. Rating 200 kW, 250 kVA, at 0.8 power factor 105 degrees Celsius, 208Y120 volts, 60 Hz at 1800 rpm.

B. The alternator shall be a single bearing revolving field type, 2/3 pitch, 4-pole and shall be completely brush less. No commutator or commutator brushes shall be allowed. The main alternator and exciter shall be vacuum impregnated. The alternator shall be directly connected to the engine through a rigid coupling to insure permanent alignment. Voltage regulation shall be within plus or minus 1% of rated voltage, from no load to full load. Voltage recovery to rated voltage after acceptance of 100% of rated load in one step shall occur within 10 seconds. Provide a permanent magnet generator (PMG) excitation system. Motor starting capability shall be a minimum of 920 kVA. Rating for non-linear loads shall not be less than 100 kW at 0.8 power factor. The generator set shall be capable of sustaining a minimum of 90% of rated no load voltage with the specified kVA load at near zero power factor applied to the generator set. The instantaneous voltage dip shall be less than 10% of rated voltage when full load and rated power factor is applied to the alternator. Stable or study-state operation is defined as operation with terminal voltage remaining constant within plus or minus 1% of rated voltage. Temperature rise shall be within rating as defined by NEMA MG1-22.40. Radio interference reduction shall exceed requirements for general civilian or commercial applications with TIF less than 50 and waveform deviation less than 0.06 line to line.

C. Provide a 120 volt anti-condensation heater minimum (100 watts) to prevent condensation during non-operating periods. Heater shall be thermostatically controlled, or rated for continuous use for the frame. Provide normal power to the heater.

D. Overload Rating: Capable of withstanding a three phase load of 300% rated current for 10 seconds, 150% of rated current for 2 minutes and 110% rated current for 60 minutes with field set for normal rated load excitation, and capable of withstanding an overspeed of 125%.

E. Performance Criteria:

1. Waveform Deviation: Less than 5%.

2. Crest Factor: 1.41 +/- 0.07.

3. Form Factor: 1.11 +/-0.05.

4. Total Harmonic Distortion: 5%.

5. Single Harmonic Distortion: 3%.

6. Telephone Interference Factor: 50% maximum.

7. Dynamic Balance: Less than 1 mil displacement peak to peak.

F. Enclosure: NEMA MG1, open drip proof.

G. Neutral Ground: As shown on drawings.

2.3 CONTROLS AND INSTRUMENTS

A. Provide comprehensive monitoring and control system integral to the Generator Set control to guard the electrical integrity of the alternator and power system. Provide single and 3-phase fault current regulation, so that downstream protective devices have the maximum current available to quickly clear fault conditions, without subjecting the alternator to potentially catastrophic failure conditions. Include provisions to either prevent over voltage due to single phase faults, or to shut down the generator set if line to neutral voltage on any phase exceeds 115% for more than 0.5 seconds. Acceptable methods are a fully rated (100%) 600 volt Circuit Breaker, mounted in the generator enclosure, GE Programmable VersaTrip of size as indicated on drawings with handheld programmer or inherent protection provided by microprocessor-based GenSet AmpSentry protection. Submittals shall demonstrate that the protective device provides proper protection for the alternator by a comparison of the trip characteristic of the breaker with the thermal damage characteristic of the alternator. Field circuit breakers shall not be acceptable for generator overcurrent protection.

B. An instrument panel mounted on top of the alternator shall contain the following:

1. Run-stop-remote switch

2. Lighted charge rate ammeter

3. Lighted oil pressure gauge

4. Lighted coolant temperature gauge

5. Remote start-stop terminals

6. Running time meter

7. Full A.C. instrument panel (A.C. ammeter, A.C. voltage, phase selector switch, frequency meter, and voltage adjusting rheostat.) All parameters shall have a readout that is not less than 2.5% accuracy.

8. Red alarm lights shall be provided for each fault and alarm condition.

9. Two sets of spare terminals shall be provided for customer selected faults.

10. An Emergency Shutdown contact shall be provided through which customer's push button or other momentary-closing switch contacts shall shutdown the generator set engine.

11. A fault reset switch contacts shall shutdown the generator set engine.

12. A fault reset switch shall be provided to clear fault indications and allow restarting of the engine after shutdown faults.

13. The control design shall be such that the fault indication shall remain until reset. The fault indicator memory shall not be dependent on the presence of either A-C or D-C voltage and shall retain the fault status memory even through complete removal and replacement of the starting batteries.

14. A battery warning that included load testing the battery on each crank shall be provided.

15. The fault reset function shall operate only when the RUN-STOP-REMOTE switch is in the STOP position.

16. All devices for interconnection and compatibility with digital accuracy and response shall be provided. Digital panels shall comply with electromagnetic interference requirements of Minimum Standard 461C – Part 9, and IEC Standard 801.2, 801.3 and 801.4.indication of voltage level

17. Include a full wave rectified automatic digital voltage regulation system matched and prototype tested by the engine manufacturer with the governing system provided. It shall be immune from misoperation due to load-induced voltage waveform distortion and provide a pulse width modulated output to the alternator exciter. The voltage regulation system shall be equipped with three-phase RMS sensing and shall control buildup of AC generator voltage to provide a linear rise and limit overshoot. The system shall include a torque-matching characteristic, which shall reduce output voltage in proportion to frequency below an adjustable frequency threshold. Torque matching characteristic shall be adjustable for roll-off frequency and rate, and be capable of being curve-matched to the engine torque curve with adjustments in the field.

18. The automatic voltage regulator shall be temperature compensated, solid-state design and include overvoltage and overexcitation protection functions. The voltage regulator shall be equipped with three phase RMS sensing. The regulator shall control buildup of AC generator voltage to provide a linear rise and limit overshoot. Overvoltage protection shall sense the AC generator output voltage and in the event of regulator failure or loss of reference, shut down regulator output on a sustained overvoltage of one (1) second duration. Overexcitation protection shall sense regulator output and shutdown regulator output if overloads exceed ten (10) seconds in duration. Both overvoltage and overexcitation protection shutdowns shall be latched, requiring the AC generator to be stopped for reset.

19. The regulator shall include an under frequency rolloff torque-matching characteristics, which shall reduce output voltage in proportion to frequency below a threshold of 58-59 Hz). The torque-matching characteristic shall include differential rate of frequency change compensation to use maximum available

engine torque and provide optimal transient load response. Regulators which use a fixed volts per hertz characteristic are not acceptable.

20. An electronic governor system shall provide automatic isochronous frequency regulation. The governing system dynamic capabilities shall be controlled as a function of engine coolant temperature to provide fast, stable operation at varying engine operating temperature conditions.

21. All analog and digital metering shall be true-RMS indicating, and shall not be disrupted by non-linear load generated waveform distortion.

22. Digital metering set shall indicate generator RMS voltage and current, frequency, output current, output kW, kW-hours, and power factor. Generator output voltage shall be available in line-to-line neutral voltages, and shall display all three phase voltages (line to neutral or line-to-line) simultaneously.

Commented [AKB1]: Page: 7
ul

23. An under frequency sensing and protection system shall be provided which causes a shutdown of the generator set if true RMS frequency falls below 90% of rated for more than 20 seconds.

24. The control system provided shall withstand the surge voltage produced by a 70A DC battery charging alternator operating at full load when the battery bank is disconnected. The test shall be successfully completed without tripping protective circuit breakers or blowing fuse protective devices.

25. All switches, lamps and meters shall be oil-tight and dust-tight and the enclosure door shall be gasketed.

26. All switches shall be provided with fully illuminated back-lit labels and all metering shall be individually lighted to allow for easy reading of functions in a completely dark room.

27. The field connections shall be made on permanently labeled terminal blocks, which are designed and tested by the manufacturer of the generator set to be suitable for use without wire termination lugs. Provisions shall be made for future addition of DIN-rail mounted components.

28. Control panel and interconnection enclosures shall be UL508 listed as a unit assembly.

2.4 ELECTRIC PLANT MOUNTING

The plant shall be provided with shock or anti-vibration mounts with the plant. Provide Korfund LKD spring-type isolators or type EU pads. Vibration isolation may be integrally a part of the generator set to skid packaged from the set manufacturer. The plants integral base shall have forklift sockets. Battery rack shall be integral part of plant base.

2.5 ACCESSORIES

A. All accessories needed for the proper operation of each plant shall be furnished. These shall include but not limited to the following:

1. Critical rated side inlet silencers with installation attachments for mounting within the set housing, flexible exhaust connection. For sets over 500 kW mount silencer on top of set housing.

2. Belt driven battery charging alternator.

3. Lead acid starting batteries

4. Battery cables.

5. Fully automatic 10 amp battery charger 120 volt, 325 watts.

6. Natural Gas Fuel Train consisting of:
   a. dry fuel strainer
   b. 12 VDC fuel solenoid valve
   c. pounds-to-ounces primary gas pressure reducing regulator
   d. UL Listed braided metallic flexible fuel line

7. An oil drain valve with hose extension shall be provided for draining oil at the side of the plant.

8. Detailed operation and maintenance manuals with parts list.

2.6 REMOTE ALARM ANNUNCIATOR

Onan no. 541-0814-02 shall be provided for flush mounting at inside locations remote from the generator set located by the fire alarm control panel.

2.7 AUTOMATIC TRANSFER SWITCH

A. Scope

1. Furnish and install automatic transfer switches (ATS) with the number of poles, amperage, voltage and withstand current ratings as shown on the plans. Each automatic transfer shall consist of an inherently double throw power transfer switch unit and a control module interconnected to provide complete automatic operation.

B. Codes and Standards

1. UL 1008 - Standard for Automatic Transfer Switches

2. NFPA 70 - National Electrical Code

3. NFPA 99 - Essential Electrical Systems for Health Care Facilities

4. NFPA 110 - Emergency and Standby Power Systems

C. Acceptable Manufacturers

1. Russelectric

2. GE/Zenith

D. Mechanically Held Transfer Switch

1. The transfer switch unit shall be electrically operated and mechanically held. The switch shall be mechanically interlocked to ensure only one of two possible positions, normal or emergency.

2. All main contacts shall be silver composition. Switches rated 600 amperes and above shall have segmented, blow-on construction and be protected by separate arcing contacts.

3. Inspection of all contacts shall be possible from the front of the switch without disassembly of operating linkages and without disconnection of power conductors. A manual operating handle shall be provided for maintenance purposes.

4. Designs utilizing components of molded-case circuit breakers, contactors, or parts thereof are not acceptable.

E. Microprocessor Control Panel

1. The control panel shall direct the operation of the transfer switch. The panel's sensing and logic shall be controlled by a built-in microprocessor.

2. Operator Panel. Each transfer switch shall be provided with a control panel to allow the operator to view the status and control operation of the transfer switch. The operator panel shall be a sealed membrane panel rated NEMA 3R/IP53 or better (regardless of enclosure rating) that is permanently labeled for switch and control functions. The operator panel shall communicate with the engine generator, including display of all engine and alternator data, and other transfer switch data in the power system. The operator panel shall allow starting and stopping of the generator set via the transfer switch operator panel in both test and emergency modes.

F. Enclosure

1. The ATS shall be furnished in a NEMA type 3R enclosure.

G. Voltage and Frequency Sensing

1. The voltage of each phase of the normal source shall be monitored, with pickup adjustable from 85% to 100% of nominal and dropout adjustable from 75% to 98% of pickup setting.

2. Single-phase voltage sensing of the emergency source shall be provided, with pickup voltage adjustable from 85% to 100% of nominal and independent frequency sensing with pickup adjustable from 90% to 100% of nominal.

H. Time Delays

1. A time delay shall be provided to override momentary normal source outages and delay all transfer and engine starting signals. Adjustable from 0 to 6 seconds.

2. A time delay shall be provided on transfer to emergency, adjustable from 0 to 5 minutes for controlled timing of transfer of loads to emergency.

3. A time delay shall be provided on retransfer to normal, adjustable from 0 to 30 minutes. Time delay shall be automatically bypassed if emergency source fails and normal source is acceptable.

4. A time delay shall be provided on shutdown of engine generator for cool down, adjustable from 0 to 60 minutes.

I. Additional Features

1. A set of DPDT gold-flashed contacts rated 10 amps, 32 VDC shall be provided for a low-voltage engine start signal.

2. A momentary-type test switch shall be provided to simulate a normal source failure.

3. One set of auxiliary contacts rated 10 amps, 250 VAC shall be provided.

4. Position indicating lights shall be provided.

5. An in-phase monitor or delayed transition shall be provided for motor load applications.

J. Withstand and Closing Ratings

1. The ATS shall be UL listed in accordance with UL 1008 and be labeled in accordance with that standard's 3 cycle, long-time ratings. ATS's that are not tested and labeled with 3 cycle (any breaker) ratings and have series, or specific breaker ratings only, are not acceptable unless the switch performance is guaranteed and UL listed for molded case circuit breakers or current limiting fuses. If current limiting fuses are utilized, provide current limiting fuses and disconnect switch mounted in or on Automatic Transfer Switch.

K. The ATS manufacturer shall maintain a national service organization of company-employed personnel located throughout the contiguous United States. The service center's personnel must be factory trained and must be on call 24 hours a day, 365 days a year.

2.8 OUTDOOR SOUND ATTENUATING WEATHER-PROTECTIVE HOUSING

A. The generator set shall be provided with a factory-installed weather protective housing to allow the generator set to operate at full rated load in the ambient conditions previously specified. Housing configuration and materials used may be of an suitable design which meets application needs, except that acoustical materials used shall be oil and water resistant. No foam materials shall be used unless they can be demonstrated to have the same durability and life as fiberglass. The enclosure shall include hinged doors for access to both sides of the engine and alternator, and the control equipment. Key-locking and pad lockable door latches shall be provided for all doors. Door hinges shall be stainless steel. The enclosure shall be provided with an exhaust silencer which is mounted inside of the enclosure, and allows the generator set package to meet specified sound level requirements. Silencer and exhaust shall include a rain cap and rain shield. All sheet metal shall be primed for corrosion protection and finish painted with the manufacturer's standard color using a two step electro coating paint process, or equal meeting the performance requirements specified below. All surfaces of all metal parts shall be primed and painted. The painting process shall result in a coating which meets the following requirements:

1. Primer thickness, 0.5-2.0 mils. Top coat thickness, 0.8-1.2 mils.

2. Gloss, per ASTM D523-89, 80% plus or minus 5%. Gloss retention after one year shall exceed 50%.

3. Crosshatch adhesion, per ASTM D3359-93, 4B-5B.

4. Impact resistance, per ASTM D2794-93, 120-160 inch-pounds.

5. Salt spray, per ASTM B117-90, 1000+ hours.

6. Humidity, per ASTM D2247-92, 1000+ hours.

7. Water soak, per ASTM D2247-92, 1000+ hours.

B. Painting of hoses, clamps, wiring harnesses, and other non-metallic service parts shall not be acceptable. Fasteners used shall be corrosion resistant, and designed to minimize marring of the painted surface when removed for normal installation or service work.

C. A 120 VAC heater with thermostat shall be provided within the generator set control panel to eliminate condensation. Contractor shall provide 120 volt circuit from normal utility source as required.

D. Enclosure shall be constructed of sound attenuating materials to provide an average maximum sound pressure level of 72 dBA at a distance of 23 feet from the face of the enclosure.

PART 3 – EXECUTION

3.1 INSTALLATION

A. Install generator on a 6 inch high reinforced concrete housekeeping pad. Provide blackouts as required.

B. Provide all power wiring, control wiring, additional contacts and relays required for a complete installation. All conduits shall be in a two hour enclosure. Underground conduits shall be concrete encased. The wall mounted dual rate battery shall be taken off line during the starting of the generator. The generator belt driven alternator shall charge the batteries when the generator is running.

C. Install generator set and transfer switches in accordance with manufacturer's instructions.

D. Ground and bond transfer switches under provisions of Division 26.

E. Provide engraved plastic nameplates under the provisions of Section 26 02 00.

3.2 WARRANTY

A. The complete standby electric power system, including engine-generator set equipped with set exerciser, and running time meter, shall be warranted for a period of five years form the date of initial start-up. Multiple warranties for individual components (engine, alternator, controls, etc.) will not be acceptable. Satisfactory warranty documents must be provided. This warranty shall be as detailed in available written documents. In the judgement of the specifying authority, the manufacturer supplying the warranty for the complete system must have necessary financial strength and technical expertise with all components supplied to provide adequate warranty support. All items of the engine, generator, and controls that are warranted in the first year shall be covered for the full five year term of the warranty.

B. Extensions of warranty term up to 10 years from start-up and inclusion of comprehensive terms shall be available for one year after start-up.

3.3 TESTS

A. Factory production model tests: Before shipment of the equipment, the generator sets shall be tested under rated load and power factor for performance and proper functioning of control and interfacing circuits. Testing at unity power factory only (resistance banks only) is not acceptable, since kW output is affected by the higher generator efficiency at unity power factor, and the kVAR for motor starting and regulation loads is not correlatable between unity and rated power factor. Other tests shall include:

1. Single step load pickup per NFPA 110.

2. Transient response and steady state governing.

3. Safety Shutdowns.

4. Prototype tests in accordance with NFPA 110 level 1 have been done on a complete and functional set, component level type tests will not substitute for this requirement.

The engineer shall be notified in advance of this test, and shall have the option of witnessing these tests. Certified copies of test results shall be forwarded to the engineer for review.

B. Field Test After Installation:

1. The complete installation shall be initially started and checked out for operational compliance by factory-trained representative(s) of the engine-generator set and transfer switch manufacturer. The engine lubrication oil and antifreeze, as recommended by the manufacturer for operation under environmental conditions specified shall be provided by the engine-generator set supplier.

2. Upon completion of initial start-up and system checkout, the supplier of the generator set shall perform a field test, with the engineer notified in advance, to demonstrate load carrying capability, stability, voltage, and frequency. The engineer shall be present during the field test.

3. The generator shall be run for four hours continuously with all available facilities emergency load connected to its output; in addition the generator set supplier must provide a portable load bank to supplement any existing load to enable full load testing. Load shall not exceed 50% of generator-set rating for first 1/2 hour, during first initial run for proper engine break-in. Records shall be maintained throughout this period to record water temperature, oil pressure, ambient air temperature, voltage, current, frequency, kilowatts, and power factor. The above data shall be recorded at 15 minute intervals throughout the test. There shall be a 10 minute unloaded run at the conclusion of the test to allow engine to cool before shutdown. Three copies of the field test data shall be furnished to the engineer. The contractor shall make all necessary hook-ups to accomplish field tests and shall furnish all fuel necessary for field test and start-up.

C. Training

1. Provide training designed for a minimum of four persons, to include:

2. Training in the system operation in all possible configurations.

3. Training in the maintenance of the system.

4. Minimum of four hours of instruction, but sufficient to cover all items specified.

5. Four sets of instruction materials.

6. Provide videotape (DVD format) of all owner training and instruction.

END OF SECTION

SECTION 26 41 13.13 - LIGHTNING PROTECTION SYSTEM FOR LOW RISE BUILDING

PART 1 – GENERAL

1.01 GENERAL

A. The General Conditions, Supplementary General Conditions, Division 1 and the Section entitled "Electrical Work - General Requirements" apply to all work herein.

B. Objective: To provide safety for the building and occupants by preventing damage to building structure caused by lightning.

1.02 STANDARDS

A. The following specifications and standards of the latest issue form a part of this specification:

1. Lightning Protection Institute
   Installation Standard, LPI 175
2. Underwriters Laboratories, Inc.
   Installation Requirements, UL96A
3. National Electrical Code (NEC)
4. National Fire Protection Association
   Lightning Protection Code, NFPA 780
5. U.S. Bureau of Standards

1.03 SCOPE

A. The work covered in this section of the specifications consists of furnishing all labor, materials, and items of service required for the completion of a functional and unobtrusive lightning protection system as approved by the engineer, and in strict accordance with this section of the specifications and the applicable Contract Drawings. Provide Class I materials.

B. If any departure from the Contract Drawings or submittal drawings covered below are deemed necessary by the Contractor, details of such departures and reasons therefore shall be submitted as soon as practical to the engineer for approval.

1.04 QUALITY ASSURANCE

A. The lightning protection system shall conform to the requirements and standards for lightning protection systems of the LPI, UL, NFPA and NEC. Upon completion, application shall be made to the Underwriters Laboratories, Inc. for inspection and certification. In addition, the Lightning Protection Institute certified system certificate shall be issued and delivered to the owner ensuring that the concealed components have also been monitored during job progress.

B. The system to be furnished under this specification shall be the standard product of manufacturers regularly engaged in the production of lightning protection equipment and shall be the manufacturer's latest approved design. The equipment shall be UL listed and properly UL labeled.

1.05 QUALIFIED MANUFACTURERS:

A. Bonded Lightning Protection Systems, Inc. – Dallas

B. Advanced Lightning Technology - Dallas

C. Thompson Lightning Protection - Minnesota

D. Harger Lightning Protection - Illinois

E. East Coast Lightning Equipment – Connecticut

1.06 SUBMITTALS

A. Complete shop drawings showing the type, size and locations of all grounding, down conductors, through-wall assemblies, roof conductors and air terminals shall be submitted to the engineer for approval.

PART 2 - PRODUCTS

2.01 LIGHTNING PROTECTION EQUIPMENT: All materials shall be copper and bronze and of the size, weight and construction to suit the application and used in accordance with LPI, UL, NEC and NFPA. Class I sized components are required for roof levels not exceeding 75 feet in height. Bolt-type connectors and splicers shall be utilized on Class I structures. Pressure squeeze clamps are not acceptable. All mounting hardware on the roof shall be stainless steel and on the facade shall be brass and/or copper.

2.02 MATERIALS:

A. All materials on the roof shall be copper as manufactured by Thompson Lightning Protection, Inc., Minneapolis, Minn., or approved equal, and shall be approved by the Underwriters' Laboratories, Inc. All down conductors shall be copper. All anchors on down conductors shall be Thompson #169 Loop Masonry Anchors which includes 1/4"-20 Pak-tite masonry anchors and 1/4" x 3/4" brass machine screws (no exceptions).

B. STANDARD: All equipment used in this installation shall be UL listed and properly UL labeled. All equipment shall be new, and of a design and construction to suit the application where it is used in accordance with accepted industry standards and LPI, UL, NFPA and NEC code requirements.

C. All roof-mounted and downlead conductors shall be Thompson No. 29X "Century rope lay copper with a minimum of 29 strand, 17 gauge heavy duty copper (99.97% pure), and shall be stranded cable weighing not less than 190 lbs. per 1000 feet, with 3/8” diameter.

D. Air terminals shall be nickel-tipped copper, having a copper base. Air terminals shall be spaced not more than twenty feet apart. Provide flathead air terminals on the roof in areas where accidental implement may occur.

PART 3 – INSTALLATION

3.01 INSTALLATION

A. The installation shall be accomplished by an experienced installation company that is UL listed, a member of the Lightning Protection Institute, United Lightning Protection Association qualified, and an employer of Certified Master Installers of lightning protection systems. A Certified Master Installer shall directly supervise the work.

B. All equipment shall be installed in a neat, workmanlike manner. The system shall consist of a complete conductor network at the roof and include air terminals, connectors, splicers, bonds, copper down leads and proper ground terminals.

C. Copper downlead cables shall be utilized. No penetration shall be made in the roof membrane.

D. Provide 20% spare air terminals to owner for replacement stock.

E. Where conductors are run in conduit for protection, the conductor shall be bonded to the entrance and exit point of the conduit by bonding wedges or approved methods to maintain electrical continuity.

F. Down conductors shall be attached to ground devices in accordance with the specific provisions of the Underwriters' Laboratories, Inc., Code. All-down conductors shall be concealed. Any exposed conductors shall be approved by Architect.

G. All metals of conductance within six feet of the lightning protection system shall be securely bonded and made a part thereof. Where stack or chimney is present, lead covered non-corrosive air terminals and conductors shall be used. Metal water pipes extending into the ground may be rated as best in ground virtue and should be made an integral part of the grounding system.

3.02 COORDINATION

A. The lightning protection installer will work with any other trades present to insure a correct, neat and unobtrusive installation.

B. It shall be the responsibility of the lightning protection installer to assure a solid bond to the main water service and to assure interconnection with other ground systems.

3.03 COMPLETION

A. Upon completion of the installation, the lightning protection installer shall secure and deliver to the owner the Underwriters Laboratories, Inc. Master Label certification or the Lightning Protection Institute Certified System certification. The system will not be accepted without the UL Master Label plate or the LPI certification certificate.

END OF SECTION 26 41 13 13

SECTION 26 43 13.13 - SURGE PROTECTIVE DEVICES – STANDARD INTERRUPTING

PART 1 - GENERAL

1.01 SCOPE

A. Specify the electrical and mechanical requirements for a modular high-energy surge protective device system (SPD). The specified system shall provide effective high energy surge current diversion and be suitable for application in ANSI/IEEE C62.41 Category A, B and C3 environments, as tested by ANSI/IEEE C62.11, C62.45.

B. The system shall be constructed using multiple surge current diversion modules utilizing metal oxide varistors (MOV) computer matched to +/- 1 volt variance and tested for manufacturer's defects. The modules shall be designed and constructed in a manner that ensures surge current sharing. Use of gas tubes, silicon avalanche diodes or selenium cells are unacceptable. Devices using less than 14 MOV's/fuse links per phase will not be accepted.

1.02 STANDARDS

A. The specified system shall be designed, manufactured, tested and installed in compliance with the following codes and standards:

Canadian Standards Association (CSA)
American National Standards Institute and
Institute of Electrical and Electronic Engineers (ANSI/IEEE C62.11, C62.41, C62.45)
Institute of Electrical and Electronic Engineers 1100 Emerald Book
Federal Information Processing Standards Publication 94 (FIBS PUB 94)
National Electrical Manufacturer Association (NEMA LS-1 1992)
National Fire Protection Association (NFPA 20, 70, 75 and 780)
National Electric Code
Underwriters Laboratories (UL 1449, Fourth Edition 2014)
Underwriters Laboratories (UL 1283, Fifth Edition)
International Electrotechnical Commission (IEC 801)
International Standards Organization (ISO) Company certified ISO 9001 for manufacturing, design and service
EMC Directive 89/336/EEC - CE compliant

B. The systems individual units shall be UL Listed and labeled under UL 1449 (Fourth Edition) Standard for Surge Protection Devices Type 1 20kA with a nominal discharge current of 20kA and the surge ratings shall be permanently affixed to the SPD. The units shall also be listed and labeled to UL1283 for type 2 locations Standard for Electromagnetic Interference Filters, and CSA Listed.

1.03 ACCEPTABLE MANUFACTURERS

A. ASCO (Emerson)
B. Current Technology (T & B)

1.04 SUBMITTALS

A. Shop drawings shall include, but not be limited to:

1. Cutsheets of surge protection devices with ratings, physical dimensions and all accessories clearly labeled.
2. Device labels shall be clearly indicated in cutsheets.

3. All standards and listings, as specified in section 1.2A-B, shall be clearly labeled in cutsheets provided.
4. Cutsheets shall clearly outline that design requirements of this specification have been met.

1.05 QUALITY ASSURANCE

A. The manufacturer shall be ISO 9001 certified. The specified system shall be tested at the component and fully assembled level, under surge conditions with AC power applied for a minimum of 1 hour. Testing shall include but not be limited to quality control checks, dielectric voltage withstand test per UL and CSA requirements, UL ground continuity tests and operational and calibration tests.

B. The unit shall be designed and manufactured in the USA by a qualified manufacturer of line conditioning equipment and Active Tracking Filters. The manufacturer shall have been engaged in the design and manufacture of such products for a minimum of 10 years.

PART 2 - PRODUCTS

2.01 ENCLOSURE

A. The specified system shall be provided in a heavy duty NEMA 4/12 or better dust-tight, drip-tight enclosure with no ventilation openings.

2.02 OVERCURRENT PROTECTION (FUSING)

A. All components, including suppression, filtering, and monitoring components, shall be individually fused and rated to allow maximum specified surge current capacity. For every 100 K amps of Surge Current Capacity, 120 amps RMS of internal, integral fusing shall be required.

B. Individual surge components shall be sand packed and fused at a maximum of 7 1/2 amps to prevent violent failure. The fusing shall be UL listed to be capable of interrupting up to 300 kA symmetrical fault current with 600VAC applied. Replaceable fusing is unacceptable. Overcurrent protection that limits specified surge currents is not acceptable.

2.03 DESIGN REQUIREMENTS

A. Protection Modes
The SPD shall provide protection as follows: All modes, L-N or L-L, L-G and N-G (where applicable) Note: L = Line, G = Ground, N = Neutral

B. UL 1449 Ratings
Based on an 80kA per mode (160kA per phase) rating, the maximum UL 1449 listed surge ratings for each and/or all of the specified protection modes shall not exceed the following in any mode of protection:

System voltage	Voltage Protection Rating
120/208 or 120/240 volt	700 volts

These ratings may vary depending upon the kA rating specified on the drawings.

C. Noise Attenuation
The unit shall be UL 1283 Listed as an electromagnetic interference filter in type 2 locations. The filter shall provide insertion loss with a maximum of 60 dB from 100 KHz to 100 MHz per 50 Ohm Insertion Loss Methodology from MIL 220A. The system shall provide up to 120 dB insertion loss from 100 KHz to 100 MHz when used in a coordinated facility system.

D. Life Cycle Testing
The SPD system shall be duty life cycle tested to survive 3,000/16,000 20kV, 10kA Surges, per IEEE C62.41 Category C3 surge current with less than 5% degradation of clamping voltage.

2.04 CONNECTIONS

A. The terminals shall be provided to accommodate a minimum wire size of #6 AWG.

2.05 ACCESSORIES

A. Unit Status Indicators:
Red and green solid state indicators with printed labels shall be provided on the front cover to redundantly indicate on-line unit status. The absence of the green light and the presence of the red light shall reliably indicate that surge protection is reduced and service is needed to restore full operation.

B. Dry Contacts for remote monitoring:
Electrically isolated Form C dry contacts, one normally open and one normally closed set standard on all units for remote monitoring.

C. Undervoltage detection:
Unit shall be equipped with 70% undervoltage detection capability.

D. Phase Loss Monitoring:
Unit shall be equipped with phase loss monitoring.

E. Power Loss Monitoring:
Unit shall be equipped with power loss monitoring.

2.06 TESTING

A. Component Testing and Monitoring
Unit shall include an on-line circuit which tests and redundantly monitors individual components in all protection modes including neutral to ground (where applicable).

2.07 ENVIRONMENTAL REQUIREMENTS

A.	Storage Temperature:	-55 to +85 C (-67 to +187 F)
B.	Operating Temperature:	-40 to +60 C (-40 to 140 F)
C.	Relative Humidity:	0% to 95%
D.	Audible Noise:	less than 45 dBa at 5 feet (1.5 m).
E.	Operating Altitude:	0 to 18,000 feet above sea level.

2.08 WARRANTY

A. The manufacturer shall provide a full 5 year parts and a 10 year labor warranty from date of shipment against any part failure when installed in compliance with manufacturer's written instructions, UL Listing requirements and any applicable national, state or local electrical codes. Direct, factory trained, ISO 9001 certified employees must be available for 48-hour assessment. A 24-hour 800 number must be available to support warranty.

PART 3 - EXECUTION

3.01 INSTALLATION

A. Install the parallel SPD with short and straight conductors as practically possible. Locate adjacent to the switchboard or panel it is serving. The contractor shall twist the SPD input conductors together to reduce input conductor inductance. The contractor shall follow the SPD manufacturer's recommended installation practices as found in the installation, operation and maintenance manual and comply with all applicable codes. Note, when SPD location is more than 5 feet from switchboard/panel it is protecting connection shall be made using a low impedance (HPI) cable.

END OF SECTION 26 43 13 13

SECTION 26 51 00. 13 - LIGHTING FIXTURES - LIGHT EMITTING DIODE (LED)

PART 1 - GENERAL

1.01 SCOPE

A. Furnish and install general and emergency lighting fixtures as noted on the drawings. Fixtures shall be completely wired with lamps installed and shall be in perfect operating condition at the time of substantial completion.

B. The types of lighting fixtures required for this project include:

1. LED

1.02 STANDARDS

A. All fixtures shall conform to all applicable UL standards and shall be UL label including damp and wet location ratings. “ETL listed” is an acceptable listing.

B. All fluorescent ballast shall comply with certified ballast manufacture (CBM) standard and CBM labeled.

C. NFPA 101

D. ANSI C82.1

E. NEMA-LE

F. All LED drivers shall be UL recognized Class 2 per UL1310 or non-Class 2 per UL 1012 as applicable.

G. All LED drivers shall comply with applicable requirements of the Federal Communications Commission (FCC) rules and regulations, Title 47 CFR part 15, for Non-Consumer Equipment.

H. All LED drivers shall be RoHS compliant.

I. TM-21

J. LM-80

K. LM-79

L. L70

M. DLC

1.03 ACCEPTABLE MANUFACTURERS

A. Provide lighting fixtures produced by manufacturers as shown and scheduled.

1.04 SUBMITTALS

A. Shop drawings shall include a brochure with a separate cut sheet for each fixture type arranged in alphabetical order with fixture and all accessories/options clearly labeled. Provide performance data for each fixture. Provide an independent test lab report for

each fixture if requested by the Architect/Engineer.

B. Provide driver and LED module data brochures for each fixture type.

C. Furnish air handling and heat removal data for light fixtures specified with these requirements.

1.05 REQUIREMENTS OF REGULATORY AGENCIES

A. WORK IN ACCORDANCE WITH:

1. National Electrical Code.
2. Local, municipal, or state codes that have jurisdiction.
3. UL fire resistance directory.

PART 2 - PRODUCTS

2.01 MATERIALS AND COMPONENTS

A. General:

Provide the size, type and rating of each light fixture shown and scheduled. All light fixtures shall complete with reflectors, lens, trim rings, flanges, LED modules, lamp holders, drivers, fuses, wiring, earthquake clips, etc. to provide a complete functioning light fixture.

B. Lighting Fixture Types:

1. LED Fixtures
   a. Fixtures shall be pre-wired with frame-in kit and integral thermal management system for fixtures. Driver shall be encased in metal-can construction for optimal thermal performance.
   b. Total fixture lumen output is dependent on the chip, thermal management, driver current and optical system. LED fixtures shall be tested as a complete unit or system. Only DOE recognized CALiPER testing laboratory results shall be utilized.
   c. Interior LED fixtures shall have integral common mode and differential mode surge protection of 3kV(1.2/50µs, 2 ohm combination wave).
   d. Exterior LED fixtures shall have integral common mode and differential mode surge protection of 10kV/10kA(1.2/50µs, 2 ohm combination wave).

2. Exit signs
   a. Exit signs shall meet all federal, state and local codes.
   b. Provide fire alarm interface relay when required to flash exit signs.
   c. Provide battery packs for emergency operation when not connected to emergency generator power.

2.02 LED MODULES AND DRIVERS - COORDINATE WITH LIGHT FIXTURE SCHEDULE

A. LED

1. Driver manufacturer shall have a 10-year history producing electronic drivers for the North American market.
2. Driver shall carry a five year limited warranty from date of manufacture against defects in material or workmanship (including replacement) for operation at a

maximum case temperature of 80 degrees Celsius.

3. Drivers shall not contain any Polychlorinated Biphenyl (PCB).
4. Provide driver with integral color-coded leads.
5. Driver shall operate from 50/60 Hz input source of 120 Volt through 277 Volt or 347 Volt through 480 Volt with sustained variations of +/- 10% (voltage) with no damage to the driver.
6. Driver output shall be regulated to +/- 5% across published load range. And shall have a power factor greater than .90 for primary application to 50% of full load rating with an input current Total Harmonic Distortion (THD) of less than 20% to 50% of full load rating.
7. Provide drivers with a Class A sound rating.
8. Provide LED drivers for outdoor fixtures with a minimum operating temperature of -40 degrees Celsius (-40 F). Provide LED drivers for indoor fixtures with a minimum operating temperature of -20 degrees Celsius (-2F).
9. Drivers shall tolerate sustained open circuit and short circuit output conditions without fail and auto-resetting without need for external fuses or trip devices.
10. Driver output ripple current shall be less than 15% measured peak-to-average, with ripple frequency being greater than 100Hz.
11. Driver performance requirements shall be met when operated to 50% of full load rating.
12. Driver shall have integral thermal foldback to reduce driver power above rated case temperature to protect the driver if temperatures reach unacceptable levels.
13. Drivers shall comply with NEMA 410 for in-rush current limits.
14. Dimmable drivers shall be controlled by a Class 2 low voltage 0-10VDC controller with dimming range controlled between 1 and 8VDC with source current 150µA.

2.03 LAMPS – COORDINATE WITH LIGHT FIXTURE SCHEDULE

2.05 SPARE FIXTURES

A. Provide 5% spare drives, minimum of 3 of each type. Provide separate pricing for Owner option.

B. Ship to the Owner in original cartons.

PART 3 - EXECUTION

3.01 INSTALLATIONS

A. General

1. Install the type of light fixture where shown and indicated in accordance with manufacturer's written instructions.
2. Provide earthquake clips on all recessed lay-in light fixtures as required by building code.
3. Adjust all adjustable light fixtures, as directed by the Architect.
4. Provide safety chains and/or wire guards for light fixtures located in high volume spaces, etc.

B. Coordination

1. The contractor shall verify the type of fixtures with the ceiling types as indicated on the drawings. Any discrepancies shall immediately be brought to the architect's attention before the contractor places his order and accepts delivery. Fixtures shall fit exact in the type of ceiling scheduled. Provide plaster frames, trim rings and other accessories required for a correct fit.

2. Provide supports attached to structural member to support fixtures when the ceiling system cannot maintain support. Provide separate supports for all recessed ceiling mounted HID fixtures.
3. Refer to architectural reflected ceiling plan for the exact location of all light fixtures. Notify the architect for any discrepancies or conflicts with structural, architectural, mechanical piping or ductwork before installation.

C. Mounting

1. Provide support channels to support outlet boxes used support surface mounted light fixtures such as exit signs or downlights.
2. Pendant or surface mounted fixture shall be provided with required mounting devices and accessories, including hickeys and stud-extensions, ball-aligners, canopies and stems. Locations of fixtures in mechanical areas shall be coordinated with mechanical contractor. Mounting stems of pendant fixtures shall be of the correct length to uniformly maintain the fixture heights shown on the drawings or established in the field. The allowable variation tolerance in mounting individual fixtures shall not exceed 1/4 inch and shall not vary more than 1/2 inch from the floor mounting height shown on the Drawings. Fixtures hung in continuous runs shall be installed absolutely level and in line with each other. Hanging devices shall comply with Code requirements. Fixtures shall employ single - not twin - stem hangers unless otherwise noted.
3. All structure mounted fixtures (i.e. bracket mounted, pipe mounted and surface mounted) shall be provided with cables of suitable size and weight to support the weight of the fixture. Cables shall be fastened around or fastened to the housing of the fixture. On pendant fixtures, one safety cable of suitable size and weight to support the weight of the fixture assembly shall connect the top of the pendant to the supporting structure by means of welding or bolting, and one safety cable shall connect the housing of the fixture to the bottom of the pendant. Where more than one pendant per fixture occurs, only one pendant must be cabled. Track fixtures for pendant mounted track shall also be supplied with clip-on safety cables of suitable size and weight to support the weight of the fixture.
4. Provide secondary support wires from all four (4) corners of the lay-in fixtures to the structure above. Do not support fixtures from ceiling grid wire supports, piping, conduit, side walls, or mechanical equipment. Ceiling specifications do not supersede this requirement.

D. Electrical Connection

1. All light fixtures installed in an accessible suspended ceiling shall be connected from a branch circuit junction box using 1/2" flexible metal conduit or MC cable fixture pigtails not exceeding 8'- 0". Provide #12 AWG conductors. All fixtures must be grounded by using a grounding conductor. Fixture to fixture wiring of fixtures installed in an accessible ceiling is not permitted. Fixture whips shall not lay-on ceiling tile or grid. Provide caddy clips to provide additional support.

E. Fire Rated Ceiling

1. Provide fire rated canopy or enclosure for all fixtures recessed in a fire rated ceiling. The fire rated canopy or enclosure shall be as required by the UL design number listed in the UL fire resistance directory. Refer to architectural drawing for the UL design number. Coordinate with ceiling installer and manufacturer.

F. Air Handling Fixtures

1. Install all air handling light fixtures with return air slot in the open position, if it is

to be as an air handling fixture. Coordinate with mechanical contractor.

3.02 FINAL INSPECTION

A. Remove all plastic and protective coating from all fixtures. Fixtures shall be thoroughly cleaned. Replace any damaged fixture or fixture parts including reflectors, louvers, lens and metal parts that show signs of corrosion.

B. Replace all other defective fixtures showing signs of excessive usage.

C. Demonstrate proper operation of all fixtures and controls.

END OF SECTION 26 51 00 13

SECTION 27 00 00
COMMUNICATIONS

PART 1 - GENERAL

1.1 SUMMARY

A. This section includes general design requirements, administration topics, and installation for communications systems.

1.2 SYSTEM DESCRIPTION

A. The objective of this project is to provide a complete communications cabling infrastructure system installation including, but not limited to: fiber backbone, riser system, horizontal data and voice cabling with attendant terminations, mounting equipment, cable pathway and management systems, testing and other items/materials, as specified in drawings, these specifications, and contract documents.

B. Related Sections
1. Section 270526 Grounding and Bonding for Communications Systems
2. Section 270528 Pathways for Communications
3. Section 271100 Communications Equipment Room Fittings
4. Section 271500 Communications Horizontal Cabling

1.3 SCOPE OF WORK

A. This section establishes an infrastructure to be used as signal pathways for communications systems, but is not limited to the following:
1. Comply with all Project Contract documents and the following requirements for a complete project installation.
2. Provide a structured cabling system as described hereafter that includes, but is not limited to, supplying, installing and testing of: backbone cabling, riser cabling; data and voice horizontal cabling, cable connectors, communications outlets and terminations, and equipment racks/cabinets for networking hardware and patch panels.
3. Furnish all labor, materials, tools, equipment and services for the installation described herein.
4. Follow industry standard installation procedures for communications cable to assure that the mechanical and electrical transmission characteristics of this cable plant and equipment are maintained.

B. Work of this section covers complete installation of permanent links for a data and voice communications networks utilizing copper and fiber transmission media that includes, but is not limited to the following:
1. Provide, install, terminate, test, and document all fiber and copper backbone cables, riser cables, and horizontal cables.
2. Provide and install all termination devices such as, but not limited to, modular patch panels, termination blocks, information outlets (jacks and plates), phone jacks, fiber distribution panels, bulkheads, connectors, and fiber fan out kits. Document all termination devices with proper labeling.
3. Provide in quantities specified, interconnect components such as, but not limited to, fiber patch cables, copper patch cords, and station cables.

4. Provide and install specified Telecommunication Room equipment such as, but not limited to, racks, cabinets, horizontal and vertical cable support devices, cable trays and cable runway, and required mounting brackets/hardware.
5. Provide and install UL-approved firestopping systems in all communication pass-through locations of rated ceiling, wall or floor penetrations involving, conduits, cable, and cable trays in coordination with General Contractor.
6. Provide and install grounding and bonding connection to the bus (TGMB/TGB) provided by Division 26.
7. Provide and install all appropriate consumable items required to complete the installation.
8. Coordination with other trades.
9. Provide complete documentation and demonstration of work.
10. Provide indexed and organized complete Test Results of all copper and fiber cable and their components.
11. Provide Submittals as outlined below.
12. Provide a Manufacturer's Extended Product Warranty and System Assurance Warranty for this wiring system.
13. Conduct a final document handover meeting with client, consultant, and PM to review, discuss and educate the Owner on the final product, test results, and As-Built Drawings.

C. Changes to the Scope of Work
1. Owner changes to the scope of work shall be in writing.
2. Change orders shall be submitted to the Owner/Project Manager complete with price breakdown and description for approval before any work is done.
3. The Contractor shall respond to these changes with a complete material list, including pricing, labor, and taxes in writing to be presented to the Owner for approval.
4. The Contractor shall not proceed with additional scope of work without signed approval by the Owner. Owner will not pay for additional work performed by the Contractor without written/signed approval of these changes.
5. Contractor will attach a copy of the signed change order with billing information.

1.4 PRODUCTS AND WORK BY OTHERS (NIC)

A. The Owner may separately procure and/or provide certain equipment and component that will be installed during the course of project. Such items may not be indicated in the documents.

B. Contractor shall cooperate with the Owner and Owner's suppliers when considering:
1. The provision and installation of phone systems, related system equipment/software, and employee station equipment/software.
2. The provision and installation of multi-port routers, switches, and other Layer 2 / Layer 3 networking components in communications rooms.
3. The provision and installation of Uninterruptable Power Source (UPS) devices in communications rooms.
4. Communications grounding busbars and grounding wires connecting to the main building electrode system.
5. Dedicated power panels, ground busbars, circuits, and utility outlets.
6. The installation and finishing of plywood backboards.

7. Building mechanical ductwork, cooling/heating system (HVAC), and environmental control sensors.

8. Communication pathway devices such as, but not limited to, cable tray and flex-tray in corridors, office spaces and open areas, outlet boxes and stub-ups, conduits, conduit sleeves, and penetrations in walls and floors.

1.5 SUBSTITUTION PROCEDURES

A. Substitution may be considered when a product becomes unavailable through no fault of the Contractor. An alternate product must be equal to or exceed specified requirements. The material substituted shall not void, alter or change manufacturers' structured cabling system warranty.

B. Document substitution requests with complete data substantiating compliance of proposed substitution with Contract Documents. Include in each request for substitution:
1. Product identification, manufacturer's name and address
2. Product Data:
   a) Description, performance and test data, reference standards, finishes and colors.
   b) Samples: Finishes.
   c) Complete and accurate drawings indicating construction revisions required (if any) to accommodate substitutions.
   d) Data relating to changes required in construction schedule.
   e) Cost comparison between specified and proposed substitution.

C. Substitutions will not be considered when they are indicated or implied on shop drawing or product data submittals, without separate written request, or when acceptance will require revision to the Contract Documents.

D. The Owner will be the final judge of acceptability, with review by DBR and the distribution of the acceptance by the Architect.

E. No substitute shall be ordered, installed or utilized without the Architect's prior written verification of acceptance from the Owner.

1.6 REFERENCES AND RELATED DOCUMENTS

A. Drawings and General provisions of the contract, including Uniform General Conditions, Supplementary General Conditions, Architectural plans and specifications, requirements of Division 1, Electrical, Mechanical, Plumbing, Audio-Visual, Security and Communications specifications and plans, and the publications listed below apply to the Communications section, are incorporated into this specification by reference, and shall be considered a part of this section.

B. Reference to codes, rules, regulations, standards, manufacturer's instructions, or requirements of regulatory agencies shall mean reference to the latest printed edition of each in effect at the date of contract.

C. The Contractor shall read all sections in their entirety and apply them as appropriate for work in this section.

D. Conflicts
1. Drawings and specifications are to be used in conjunction with one another and to supplement one another.
2. In general, the specifications determine the nature and quality of the materials and tests, and the drawings establish the quantities, details, and give characteristics of performance that should be adhered to during the installation of the communications system components.

3. If there is an apparent conflict between the drawings and specifications, or between specification sections, the items with the greater quantity and/or quality shall be estimated and installed.
4. Clarification with the Owner and/or DBR about these items shall be made in writing prior to procurement and installation.

E. Codes and Standards

1. American National Standards Institute/Telecommunications Industry Association (ANSI/TIA)
   a) ANSI/TIA-568-C.0 "Generic Telecommunications Cabling for Customer Premises"
   b) ANSI/TIA-568-C.1 "Commercial Building Telecommunications Cabling Standard"
   c) ANSI/TIA-568-C.2 "Balanced Twisted-Pair Telecommunication Cabling and Components Standard"
   d) ANSI/TIA-568-C.3 "Optical Fiber Cabling Components Standard"
   e) ANSI/TIA-568-C.4 "Broadband Coaxial Cabling and Components Standard"
   f) ANSI/TIA-569-C "Telecommunications Pathways and Spaces"
   g) ANSI/TIA-606-B "Administration Standard for Commercial Telecommunications Infrastructure"
   h) ANSI/TIA-607-B "Commercial Building Grounding (Earthing) and Bonding Requirements for Telecommunications"
   i) ANSI/TIA-758-B "Customer-Owned Outside Plant Telecommunications Infrastructure Standard"
   j) ANSI/TIA-862-A “Building Automation Systems Cabling Standard”
   k) ANSI/TIA-942-A: “Telecommunications Infrastructure Standard for Data Centers”
   l) ANSI/TIA-1152: “Requirements for Field Test Instruments and Measurements for Balanced Twisted-Pair Cabling”
2. American National Standards Institute (ANSI)
   a) ANSI C80.1 Electrical rigid steel conduit (ersc)
3. American Society for Testing Materials (ASTM)
   a) ASTM A123/A123M-13 Standard Specification for Zinc (Hot-Dip Galvanized) Coatings on Iron and Steel Products
   b) ASTM A510/A510M-13 Standard Specification for General Requirements for Wire Rods and Coarse Round Wire, Carbon Steel, and Alloy Steel
   c) ASTM A653/A653M-13 Standard Specification for Steel Sheet, Zinc-Coated (Galvanized) or Zinc-Iron Alloy-Coated (Galvannealed) by the Hot-Dip Process
   d) ASTM B3-13 Standard Specification for Soft or Annealed Copper Wire
   e) ASTM B8-11 Standard Specification for Concentric-Lay-Stranded Copper Conductors, Hard, Medium-Hard, or Soft
   f) ASTM B33-10 Standard Specification for Tin-Coated Soft or Annealed Copper Wire for Electrical Purposes
   g) ASTM B633-13 Standard Specification for Electrodeposited Coatings of Zinc on Iron and Steel
   h) ASTM B653/B653M-11 Standard Specification for Seamless and Welded Zirconium and Zirconium Alloy Welding Fittings
4. BICSI

a) BICSI Outside Plant Design Reference Manual
b) BICSI Telecommunications Distribution Methods Manual (TDMM)

5. Federal Specifications (FS)

a) FS W-C-58C Conduit Outlet Boxes, Bodies Aluminum and Malleable Iron
b) FS W-C-1094 Conduit and Conduit Fittings Plastic, Rigid
c) FS WW-C-566C Flexible Metal Conduit
d) FS WW-C-581D Coatings on Steel Conduit

6. Institute of Electrical and Electronic Engineers (IEEE)

a) IEEE 142-1991 Recommended Practice for Grounding of Industrial and Commercial Power Systems
b) IEEE 1100-2005 IEEE Recommended Practice for Powering and Grounding Electronic Equipment

7. National Electrical Code (NEC)

a) NEC Article 250 - Grounding and Bonding
b) NEC Chapter 8 - Communications Systems

8. National Electrical Manufacturers Association (NEMA)

a) NEMA RN1 Polyvinyl Chloride (PVC) Externally Coated Galvanized Rigid Steel Conduit and Intermediate Metal Conduit
b) NEMA TC2 Electrical Polyvinyl Chloride (PVC) Tubing and Conduit
c) NEMA TC3 Polyvinyl Chloride (PVC) Fittings for Use with Rigid PVC Conduit and Tubing
d) NEMA VE 1 - Metal Cable Tray Systems
e) NEMA VE 2 - Cable Tray Installation Guidelines

9. Underwriters' Laboratories (UL)

a) UL Cable Certification and Follow-Up Program
b) UL 6: Electrical Rigid Metal Conduit - Steel
c) UL 83: Thermoplastic-Insulated Wires and Cables
d) UL 467: Grounding and Bonding Equipment
e) UL 514B: Conduit, Tubing, and Cable Fittings
f) UL 651: Standard for Schedule 40, 80, Type EB and A Rigid PVC Conduit and Fittings
g) UL 651A: Schedule 40 and 80 High Density Polyethylene (HDPE) Conduit
h) UL 1666: Standard for Test for Flame Propagation Height of Electrical and Optical-Fiber Cables Installed Vertically in Shafts

10. Local, county, state and federal regulations and codes in effect as of date of installation.

11. Equipment of foreign manufacture must meet U.S. codes and standards.

a) It shall be indicated in the proposal the components that may be of foreign manufacture, if any, and the country of origin.

1.7 QUALITY ASSURANCE

A. Communications Contractor shall have a complete working knowledge of low voltage communications cabling applications such as, but not limited to data, voice and video network systems.

B. Communications Contractor shall have installed similar-sized systems in at least ten (10) other projects in the last five (5) years prior to this bid and be regularly engaged in the business of installation of the types of systems specified in this document.

C. Communications Contractor and individual installation crew members shall be experienced and qualified to perform the work specified herein at time of bid submission. All onsite supervision personnel that will be assigned to this project shall be listed in the Pre-Installation Submittal.

1. 80% shall have a minimum of three (3) years of experience in the installation of the types of systems, equipment, and cables specified in this document prior to this bid.

2. All installation team members must demonstrate knowledge and compliance with all applicable methods, standards, and codes.

3. All members of the installation team shall be certified by the Structured Cabling System Assurance Warranty provider as having completed the necessary training to complete their part of the installation and capable of an installation that falls under manufacturer's guidelines necessary to obtain the Manufacturer's System Assurance Warranty.

4. Any personnel substitutions shall be noted in writing to the Owner.

D. A BICSI RCDD shall supervise and approve all on-site work as a recognized member of the Contractor's installation team.

E. Refer also to General Conditions.

1.8 CONTRACTOR REQUIREMENTS

A. In order to accomplish the conditions of this agreement, the Contractor shall perform the specific duties listed herein.

B. Contractor shall provide and pay for all labor, supervision, tools, equipment, test equipment, tests and services to provide and install a complete communications cabling infrastructure system. Pay all required sales, gross receipts, and other taxes.

C. Insurance

1. The Contractor shall procure, submit for review, and maintain for the duration of this agreement, insurance against claims for injuries to persons or damages to property which may arise from, or in connection with, the performance of work hereunder by the Contractor, his agents, representatives, employees or subcontractor. The Contractor shall pay the cost of such insurance.

2. The Owner, its directors, officers, representatives, agents and employees, respectively, shall have no responsibility to the Contractor with respect to any insurance in accordance with the provisions set forth herein.

D. Regulatory Requirements

1. Communications Contractor shall supply all city, county, and state telecommunication cabling permits required by Authority Having Jurisdiction (AHJ).

2. Communications Contractor shall be licensed and/or bonded as required for telecommunications/low voltage cabling systems.

E. Privacy and Confidentiality

1. The Contractor will respect and protect the privacy and confidentiality of Owner, its employees, processes, products, and intellectual property to extent necessary, consistent with the legal responsibilities of the Owner policies.

2. Contractors shall sign a non-disclosure agreement and abide by the requirements to keep confidential all information concerning bid documents and this project.

F. Use of Subcontractors
   1. Successful bidder shall inform the Owner's contact and General Contractor in writing about the intention to use Subcontractors and the scope of work for which they are being hired.
   2. The Owner or Owner's designated contact must approve the use of Subcontractors in writing prior to the Subcontractor's hiring and start of any work.

G. The Contractor's designated Project Manager will be recognized as the single point of contact. The Project manager shall oversee all work performed to ensure compliance with specifications as outlined in bid documents (which includes all specifications, references, and drawings) to ensure a quality installation and attend project meetings with the telecommunication consultant, the Owner and others.

H. Coordination
   1. Coordinate installation work with other trades (examples include ceiling grid contractors, HVAC and sheet metal contractors, etc.) to resolve procedures and installation placement for cable trays and cable bundle pathways.
   2. The goal of this coordination will be to establish priority pathways for critical data/voice network cable infrastructure, materials, associated hardware, as well as mitigate delays to the project and to allow service access for communications and HVAC components.
   3. Exchange information and agree on details of equipment arrangements and installation interfaces.
   4. Coordinate with electrical contractors and plan for the pathway routes used communications cabling to minimize cable lengths. Report any potential over distance cable runs for approval before pulling the cables.
   5. Record agreements with other trades and distribute record to other participants, Owner and telecommunication consultant.

1.9 PRE-INSTALLATION MEETINGS

A. Communications Contractor shall attend and/or arrange a scheduled pre-installation conference prior to beginning any work of this section. This venue is to ask and clarify questions in writing with consultant and/or project manager/Owner representative.

B. Agenda
   1. Safety
   2. Work to be performed
   3. Scheduling
   4. Coordination
   5. Other topics as necessary

C. Attendance
   1. Communications project manager/supervisor shall attend meetings arranged by General Contractor, Owner's representatives, and other parties affected by work of this document.
   2. All individuals who will serve in an on-site supervisory capacity, including project managers, site supervisors, and lead installers, shall be required to attend the pre-installation conference. Individuals who do not attend the conference will not be permitted to supervise the installation and testing of communications cables on the project.

1.10 CONTRACT ADMINISTRATION

A. DBR Inc may perform site visits and provide job field reports upon inspection of Contractor's installation, materials, supporting hardware, coordination with other trades and progress to schedule to the client.

B. Job Field Report outline:
   1. General: The general installation progress in relation to scheduled work made by the Contractor up to that date.
   2. Deficiencies and/or Items of Note: Documents observations of the cable installation that may require corrective action by the Contractor.

1.11 POST INSTALLATION MEETINGS

A. At the time of substantial completion the contractor shall call and arrange for a post installation meeting to present and review all submittal documents to include but not be limited to As-Built Drawings, Test reports, Warranty paperwork, etc.

B. Attendees shall include
   1. Communications Contractor
   2. Project Manager/Owner Representative
   3. General Contractor
   4. DBR Inc.
   5. Other trades that the GC deems appropriate.

C. At this meeting the Communications Contractor shall present and explain all documentation.

D. Any discrepancies or deviations noted by and agreed to by participants shall be remedied by the Communications Contractor and resubmitted within one (1) week of the meeting.

1.12 DELIVERY, STORAGE, AND HANDLING

A. Coordination with delivery companies, drivers, site address, and contact person(s) will be the responsibility of the Contractor.

B. Communications Contractor requirements:
   1. Be responsible for prompt material deliveries to meet contracted completion date.
   2. Coordinate deliveries and submittals with the General Contractor to ensure a timely installation.
   3. No equipment materials shall be delivered to the job site more than three weeks prior to the commencement of its installation.
   4. Equipment shall be delivered in original packages with labels intact and identification clearly marked.
   5. Equipment shall not be damaged in any way and shall comply with manufacturer’s operating specifications.
   6. Equipment and components shall be protected from the weather, humidity, temperature variations, dirt, dust, or other contaminants.
   7. Equipment damaged prior to system acceptance shall be replaced at no cost to the Owner.
   8. Contractor shall be responsible for all handling and control of equipment. Contractor is liable for any material loss due to delivery and storage problems.

C. Owner/General Contractor shall provide the security requirements for Contractor to follow.

1.13 PROJECT/SITE CONDITIONS

A. For all environmental recommendations, refer to master Architectural section.

B. For all security recommendations, refer to related consultant sections.

C. Contractor shall provide daily a clean work environment that is free from trash/rubbish accumulated during and after cabling installation.

D. Contractor shall keep all liquids (drinks, sodas, etc.) away from finished spaces. If any liquid or other detriment (cuts, soils, stains, etc.) damages any finishes, Contractor shall provide professional services to clean or repair scratched/soiled finishes, at Contractor's expense.

E. Damage by Communications Contractor to the work of others will be remedied at the Contractor's expense in a timely manner.

1.14 WARRANTY

A. The Contractor shall be a certified Manufacturer's Value Added Reseller (VAR) and/or Authorized Installer and provide an end-to-end product warranty, adhere to the industry standard engineering, installation and testing procedures and utilize the authorized manufacturer components and distribution channels in provisioning this project.

B. Contractor shall coordinate with manufacturer for warranty paperwork and procedures prior to the start of the project.

C. Contractor shall provide a minimum one (1) year warranty on installation and workmanship PLUS an Extended Product Warranty and System Assurance Warranty for this wiring system and shall commit to make available local support for the product and system during the Warranty period.

1. The Extended Product Warranty shall apply to all passive structured cabling system components and shall cover the replacement or repair of defective products and labor for the replacement or repair of such defective products for a minimum of one (1) year.

2. The System Assurance Warranty provides a complete system and product warranty that will be extended to the end-user, ensuring the structured cabling system will be free of defects in materials and workmanship, will meet or exceed applicable performance requirements defined in the contract documents, and support all current and future network applications for a minimum of twenty (20) years.

D. System Certification: Upon successful completion of the installation and subsequent inspection, the customer shall be provided with a numbered certificate, from the manufacturer, registering the installation.

1.15 PAYMENT

A. Refer to the General Contractor contract documents and/or master specifications issued by Architect for project and cost payment details.

1.16 SUBMITTALS

A. Refer to Requirements of Division 1

B. Refer to Sections 271300 and 271500

C. The Communications Contractor shall not perform any portion of the work requiring submittal and review of shop drawings, product data, or samples until Owner has approved the respective submittal in writing. Such work shall be in accordance with approved submittals.

D. Pre-Installation Submittal Requirements

1. Communications Contractor shall provide certificates for the appropriate insurance coverage as defined in contract documents.

2. City, county, and/or state telecommunication cabling permits as required by Authority Having Jurisdiction (AHJ).
3. Executed non-disclosure agreement.
4. Appoint a Project Manager and provide the name and contact information.
5. Shop Drawings

    a) Communications Contractor shall submit, for approval, floor plans that identify all device locations, cable routes and quantities, cable types, riser locations, and references to installation details and diagrams.

        1) Communication Contractor shall notify Owner of cable routes exceeding standardized lengths.

    b) Communications Contractor shall submit, for approval, diagrams that show room layouts, rack layouts (including elevations), riser layouts, etc.
    c) The Contractor shall make any corrections as required by the consultant team and submit revised shop drawings to the team for approval.
    d) Approval by the Consultant of such drawings or schedules shall not relieve the Contractor from responsibility for deviations from the drawings or specifications, nor shall it relieve the Contractor from responsibility for errors of any sort in shop drawings or schedules. Requests to deviate shall be submitted in writing to the Architect.
6. Product Data Cut-sheets

    a) Communications Contractor shall submit catalogue cut-sheets that include manufacturer, trade name, and complete model number for each product specified. Model number shall be handwritten and/or highlighted to indicate exact selection.
    b) Communications Contractor shall identify applicable specification section reference for each product performance for each component specified for approval prior to purchase and installation.
7. Warranty

    a) The Communications Contractor shall submit appropriate documentation from the certifying manufacturer showing the project is registered and qualified for the System Assurance Warranty.
    b) All subsequent work shall be in accordance with approved submittals. The Communications Contractor shall not perform any portion of the work requiring approval of the System Assurance Warranty manufacturer's warranty registration qualification procedures that would disqualify any part or all of the wiring system from that warranty qualification.
8. Qualifications

    a) Communications Contractor shall submit a list of the Contractor's previous projects that demonstrate qualification for this project. This list shall include, but not be limited to:

        1) At least ten (10) other projects in the last five (5) years
        2) Name and location of project
        3) Project contacts, email addresses, and phone numbers
        4) Total square footage
        5) Total number of cables/drops
        6) Types of media

b) Communications Contractor shall submit an up-to-date and valid statement of qualifications for those assigned to perform the work specified herein at time of bid submission.

1) Communications Contractor Employees
2) Subcontractors

c) Manufacturer certifications for Contractor and installers.

9. Cable Testing Plan

a) The Contractor shall provide a complete and detailed test plan for approval of the cabling system specified herein, including a complete list of test equipment for copper and fiber components and accessories prior to beginning cable testing.

b) The following minimal items shall be submitted for review:

1) A testing plan that clearly describes procedures and methods.
2) Product data for test equipment.
3) Certifications and qualifications of all persons conducting the testing.
4) Calibration certificates indicating that equipment calibration meets National Institute of Standards and Technology (NIST) standards and has been calibrated at least once in the previous year of the testing date.
5) Examples of test reports, including all graphs, tables, and charts necessary for display of testing results.

10. Samples

a) For workstation outlet connectors, jack assemblies, housings and faceplates for color selection and evaluation of technical specifications and requirements. Confirm with Architect, interior designer, and Owner representative for color before purchasing materials.

11. Unit Pricing

a) Provide add/deduct unit pricing for a permanent link, including all components, with an average cable length of a linear 150'-0". All requirements and specifications will be enforced.

E. Closeout Submittal Requirements

1. As-Built Drawings

a) Communications Design drawings are to be supplied to the Architect to prepare the master “As-Built” drawings.

b) Submit one electronic copy and one hard copy with project deliverables within three (3) weeks subsequent to substantial completion. Provide a laminated floorplan with drop designations in the respective serving Telecom Room.

c) As-Built drawings shall be in AutoCAD format, same version as used by Architect and consultant. Dimensions and scale of the drawing sheets submitted shall match the size of the drawing sheets used for the contract documents.

d) Utilize normal recognized drafting procedures that match AutoCAD standards, Architect and Consultant guidelines, and methodology.

e) The As-Built drawings shall incorporate all changes made to the building identified in, but not limited to, addendum, change notices, site instructions or deviations resulting from site conditions.

1) Contractor shall clearly identify any resubmitted drawing sheets, documents or cut sheets either by using a color to highlight or cloud around resubmitted information.
2) Maintain drawing numbering or page/sheet scheme consistency as per previously issued drawings/documents.

f) Provide dimensioned plan and elevation views of networking components, showing:

1) All work area outlet locations complete with outlet/cable labeling.
2) Rack and/or cabinet locations complete with labeling.
3) One-line diagram of equipment/device interconnections with the cable plant.
4) Standard or typical details of installations unique to Owner's requirements.
5) Graphic symbols and component identification on detail drawing shall conform to the latest conventions:

i) ANSI/TIA-568-C.0 "Generic Telecommunications Cabling for Customer Premises"
ii) ANSI/TIA-569-C "Telecommunications Pathways and Spaces"
iii) ANSI/TIA-606-B "Administration Standard for Commercial Telecommunications Infrastructure"
iv) ANSI/TIA-607-B "Commercial Building Grounding (Earthing) and Bonding Requirements for Telecommunications"

2. The Communications Contractor shall deliver the Installer's Extended Product Warranty and Manufacturer's signed System Assurance Warranty of installed cabling system to include all components that comprise the complete cabling system.

a) Delivery shall be completed within two (2) weeks of the time of final punch list review.
b) Product Certificates shall be signed by manufacturers of cables, connectors, and terminal equipment certifying that products furnished comply with requirements.

3. Cable Testing Report Requirements

a) Submit certified test reports of Contractor-performed tests. Contractor shall submit the required Test Reports in the format and media specified, upon completion of testing the installed system.
b) The tests shall clearly demonstrate that the media and its components fully comply with the requirements specified herein.
c) Three (3) sets of electronic and hardcopy versions of test reports shall be submitted together and clearly identified with cable designations.
d) Cable inventory data shall be submitted for all fiber, copper, and coaxial cabling and termination components. Include products furnished:

1) Manufacturer's name
2) Manufacturer's part numbers
3) Cable designations

4) Location and riser assignments
5) Product Data

4. Supply Owner with training manuals with instructions on methods of adding or removing cabling to/from firestopped sleeves and chases.

F. The Contractor's BICSI Registered Communications Distribution Designer (RCDD) supervisor shall review, approve and stamp all documents prior to submitting. The Contractor's RCDD shall warrant in writing that 100% of the installation meets the requirements specified herein upon completion of all work.

PART 2 - PRODUCTS

2.1 SUMMARY

A. Equipment and materials shall be standard products of a manufacturer regularly engaged in the manufacture of telecommunications cabling products and shall be the manufacturer's latest standard design in satisfactory use for at least one year prior to bid opening.

B. All material and equipment, as provided, should be the standard Commercial-Off-The-Shelf (COTS) products of a manufacturer engaged in the manufacturing of such products.

1. All shall be typical commercial designs that comply with the requirements specified.
2. All material and equipment shall be readily available through manufacturers and/or distributors.

C. All equipment shall be standard catalogued items of the manufacturer and shall be supplied complete with any optional items required for proper installation.

D. Coordinate the features of materials and equipment so they form an integrated system. Match components and interconnections for optimum future performance and backward compatibility.

E. All materials shall be UL- and/or ETL-approved and labeled in accordance with NEC for all products where labeling service normally applies.

F. Materials and equipment requiring UL 94, 149 or 1863 listing shall be so labeled. Modification of products that nullifies UL labels is not permitted.

G. Backward Compatibility: The provided products shall be backward compatible with lower category ratings such that if higher category components are used with lower category components, the basic link and channel measures shall meet or exceed the lower category's specified parameters.

H. Component Compliance: The provided products shall each meet the minimum transmission specifications listed herein such that no individual component will be less than specifications for permanent link and channel, regardless of the fact that tests for link and channel ultimately meet required specifications.

2.2 ACCEPTABLE MANUFACTURERS

A. Identification (Labeling) System

1. Brady
2. Dymo
3. Hellerman-Tyton
4. Acceptable alternate

B. Fire-Stop Systems

1. Hilti
2. SpecSeal
3. 3M
4. Acceptable alternate

C. Other Products as Referenced in other Division 27 Specifications.

PART 3 - EXECUTION

3.1 PREPARATION

A. Field Measurements
1. Verify dimensions in areas of installation by field measurements before fabrication and indicate measurements on shop drawings. Coordinate fabrication schedule with construction progress to avoid delaying the work.

B. Established Dimensions
1. Where field measurements cannot be made without delaying the work, coordinate with the General Contractor to establish dimensions.
2. When approved in writing, proceed with fabricating units without field measurements.
3. Coordinate supports, adjacent construction, and fixture locations to ensure actual dimensions correspond to established dimensions.

C. Pre-installation inspection
1. The Contractor shall visually inspect all cables, cable reels, and shipping cartons to detect possible cable damage incurred during shipping and transport.
2. Visibly damaged goods are not acceptable and shall be replaced by the contractor at no additional cost to the Owner.

3.2 INSTALLATION

A. General
1. Contractor shall install work in accordance with specifications, drawings, manufacturer’s instructions and approved submittal data.

B. Allowable cable bend radius and pull tension:

a) In general, communications cable cannot tolerate sharp bends or excessive pull tension during installation.
b) Refer to cable manufacturer's bend radius recommendations for the maximum allowable limits.
c) After installation, exposed cable and other surfaces must be cleaned free of lubricant residue. Use only lubricants specifically designed for cable installation.

C. Pull Strings
1. Provide pull strings in all new conduits, including all conduits with cable installed (trailer strings) as part of this contract.
2. Data and video cables can be pulled in tandem with pull strings.
3. The pull strings must move freely to prevent cable jacket/cable damage during pulls.

D. Labeling
1. Cable labels: Self-adhesive vinyl or vinyl-cloth wraparound tape markers, machine printed with alphanumeric cable designations.

2. Flat-surface labels: Self-adhesive vinyl or vinyl-cloth labels, machine printed with alphanumeric cable designations.
3. Provide transparent plastic label holders, and 4-pair marked colored labels.
4. In accordance with ANSI/TIA-606-B "Administration Standard for Commercial Telecommunications Infrastructure":
    a) Install colored labels according to the type of field as per color code designations.
    b) Use “designation strip color-code guidelines for voice, data, cross-connect, riser, and backbone fields”.
5. Pathway Labels and Labeling System
    a) Labeling system shall consist of a hand-held portable printer
    b) Conduits: General-purpose label designed for powdered coated surfaces with an ultra-aggressive adhesive. Label size shall be appropriate for the conduit size. Font size shall be legible from the finished floor.
    c) Inner duct: Polyethylene general-purpose tagging material attached using tie wraps.
    d) Junction boxes: General-purpose label designed for powdered coated surfaces with an ultra-aggressive adhesive, trade name. Font size shall be easily visible from the finished floor.
    e) All labels shall be permanent, i.e. will not fade, peel, or deteriorate due to environment or time.
    f) Identification
        1) All conduits, junction boxes, gutters, and pull boxes shall have machine-generated labels easily visible from the finished floor.
        2) Conduits shall be labeled with the word “communications” and the conduit’s origination room number and destination room number.
        3) The Contractor shall label conduit at each wall and floor penetration and at each conduit termination, such as outlet boxes, pull boxes, and junction boxes, or as otherwise specified in other sections.
        4) Junction boxes, gutters and pull boxes shall be labeled with identification name or number as determined by contractor and submitted for approval.
        5) The Contractor shall label conduit sleeves at each wall and floor penetration.

E. Firestop
1. Provide approved fire-resistant materials to restore originally-designed fire-ratings to all wall, floor, and ceiling penetrations used in the distribution and installation for communications cabling system.
2. Install and seal penetrations (conduit, sleeves, slots, chases) in fire-rated barriers created for communications infrastructure to prevent the passage of smoke, fire, toxic gas, or water through the penetrations.
3. The firestopping material shall maintain/establish the fire-rated integrity of the wall/barrier that has been penetrated.
4. All through penetrations in a fire rated surface require a sleeve, regardless of penetration diameter or penetrating cable count.

5. Using a “ring and string” method of installing cabling for membrane penetrations in a wall cavity is acceptable, provided the solution was accepted by the Owner in writing. Code-compliant firestopping rules still apply.
6. Coordinate firestopping procedures and materials with General Contractor.
7. Sharing the pathway of other trades/utilities through compliant and non-compliant penetrations does not remove the requirement to maintain code-compliant firestopping.
8. Provide and install removable, intumescent mechanical systems in floor chases for all openings greater than 0’-4”.
9. Provide and install removable, intumescent, firestop bricks for all openings greater than 0’-4” where there are penetrations through walls.
10. Bricks shall be listed for insertion in fire-rated openings and require restraining materials or apparatus as needed per manufacturers’ specifications.
11. Provide manufacturer recommended material for rated protection for any given barrier.
12. Laminate and permanently affix adjacent to chases the following information:
    a) Manufacturer of firestop system.
    b) Date of installation/repair.
    c) Part and model numbers of system and all components.
    d) Name and phone numbers of local distributor and manufacturer’s corporate headquarters.
13. Solutions and shop drawings/submittals for firestop materials and systems shall be presented to the General Contractor for written approval of materials/systems prior to purchase and installation.
14. Materials shall be installed per manufacturer instructions, be UL-listed for intended use, and meet NEC and locals codes for fire stopping measures.
15. The material chosen shall be distinctively colored to be clearly distinguishable from other materials, adhere to itself, and maintain the characteristics for which it is designed to allow for the removal and/or addition of communication cables without the necessity of drilling holes in the material.
16. Develop training manuals with instructions on methods of adding or removing cabling to/from firestopped sleeves and chases.

F. Within the normal environment, the installed systems shall not generate nor be susceptible to any harmful electromagnetic emission, radiation, or induction that degrades, or obstructs any equipment.

G. Expansion Capability: Unless otherwise indicated, provide spare conductor pairs in cables, positions in patch panels, cross connects, and terminal strips, and space in cable pathways and backboard layouts to accommodate 20% future increase in structure cable system capacity.

H. In the event of a breach of the representations and warranties contained herein, the Contractor, at their own expense, shall take all measures necessary to make the cabling system work and comply with the applicable manufacturer written technical recommendations and standards.

I. System Tests

1. Upon completion of the installation of the communications infrastructure systems, including all pathways and grounding, the Contractor shall test the system.

a) Cables and termination modules shall be affixed, mounted or installed to the designed/specified permanent location prior to testing.
b) Any removal and reinstallation of any component in a circuit, including faceplates, shall require retesting of that circuit and any other disturbed or affected circuits.
c) Approved instruments, apparatus, services, and qualified personnel shall be utilized.
d) The Contractor must verify that the requirements of the specifications are fully met through testing with an approved tester (rated for testing parameters listed elsewhere), and documentation as specified below.
e) This includes confirmation of requirements by demonstration, testing and inspection. Demonstration shall be provided at final walk-through in soft copy and printed test data.

2. Non-Compliant Cabling

a) Testing that shows some or all pairs of a cable do not comply with specifications, without written approval by the Owner, shall be replaced at Contractor's expense (including respective connectors).
b) With the Owner's written approval, the over-length cable(s) shall be excluded from requirements to pass standardized tests and shall be explicitly identified.

1) Testing is still required for non-compliant cabling.
2) The tests shall be for wire-mapping, opens, cable-pair shorts, and shorts-to-ground.
3) The test results must be within acceptable tolerances and shall be submitted with the Owner's acceptance document.

3. Failed Tests

a) If tests fail, Contractor shall correct as required to produce a legitimate passing test.
b) Manipulation of tester parameters on a failing test in order to achieve a passing test is unacceptable.
c) If the Contractor is found to have manipulated or falsified any failing test result to show a "PASS" for any reason (without written notice and prior approval of the Owner), the Contractor shall be required to employ a Third-Party Testing Agent selected by the Owner to retest the complete cable plant and shall be required to pay all costs associated with this retesting.

4. Owner reserves the right to be present during any or all testing.

3.3 CLEANING

A. The Contractor will clean all surfaces prior to final acceptance by Owner.

3.4 COMPLETION INSPECTION AND PUNCH LIST

A. When the Contractor determines that the Scope of Work has been completed in accordance with the plans and specifications, Contractor shall schedule a Completion Inspection with the Owner.

B. A Punch List will be generated during the Completion Inspection containing deficiencies in need of corrective action.

C. Complete all punch list deficiencies within 10 working days. The work is not complete until all punch list deficiencies have been addressed.

3.5 ACCEPTANCE

A. Once all work has been completed, test documentation has been submitted, and Owner is satisfied that all work is in accordance with contract documents, the Owner shall notify Contractor in writing of formal acceptance of the system.

B. Contractor must warrant in writing that 100% of the installation meets the requirements specified herein (Standards Compliance & Test Requirements).

C. Acceptance shall be subject to completion of all work, successful post-installation testing which yields 100% PASS rating, and receipt of full documentation soft and hard copies as described herein.

END OF SECTION 270000

SECTION 27 05 26

GROUNDING AND BONDING FOR COMMUNICATIONS SYSTEMS

PART 1 - GENERAL

1.1 SUMMARY

A. This section includes grounding and bonding products, design requirements and installation for communications systems.

B. Related Sections

1. Section 270000 Communications
2. Section 270528 Pathways for Communications Systems
3. Section 271100 Communications Equipment Room Fittings
4. Section 271500 Communications Horizontal Cabling

1.2 REFERENCES

A. The publications referenced in Section 270000 form a part of this specification. The publications are referred to in the text by basic designation only.

B. Specific reference in specifications to codes, rules, regulations, standards, manufacturer's instructions, or requirements of regulatory agencies shall mean the latest printed edition of each in effect at the date of contract unless the document is shown dated.

C. Conflicts

1. Refer to Section 270000.

D. Codes and Standards

1. Refer to Section 270000.

1.3 SYSTEM REQUIREMENTS

A. General

1. All conductor wire, busbars and conduit shall be UL listed.
2. The communications ground system shall be independent from all power grounding except for the connection to the building's electrical service main grounding electrode system.
3. Power grounding and/or bonding shall not be allowed to interfere or provide any back feed or be a conductor to the separate communications ground system source or to any communications bonded materials or equipment.

B. Telecommunications Main Grounding Busbar (TMGB) and Bonding Conductor for Telecommunications (BCT)

1. The main ground source feed for the Telecommunications Main Grounding Busbar (TMGB) in the MC (MDF) shall be an independent feed from the building's electrical service main grounding electrode system, known as the Bonding Conductor for Telecommunications (BCT).

2. The BCT shall be a stranded copper ground wire from the building ground system to the TMGB in the MC (MDF) sized at a minimum #4/0 unless otherwise sized by the Electrical Engineer of Record.
3. The BCT connections shall be low emission exothermic welds at the connecting ends.

C. Telecommunication Bonding Backbone (TBB) and Telecommunications Grounding Busbar (TGB)

1. The Telecommunication Bonding Backbone (TBB) originates at the TMGB and shall be extended from the TMGB within the MC (MDF) throughout the building along the same route as the telecommunications backbone pathways, to the Telecommunications Grounding Busbar(s) (TGBs) in each TR (IDF).
2. The minimum TBB conductor size between busbars shall be a stranded copper ground wire one (1) AWG size smaller than the Bonding Conductor for Telecommunications (BCT).

D. Grounding Equalizer (GE)

1. Whenever two or more TBBs are used in a multistory building, the TBBs shall be bonded together with a GE (by low emission exothermic welds) at the top floor and at a minimum of every third floor in between with a copper conductor equal to the gauge of the TBB.

E. TEBC and RBC

1. All cabinets and racks shall be connected by the Telecommunications Equipment Bonding Conductor (TEBC). The TEBC is a stranded copper #4 conductor from the TMGB/TGB extending along each row of racks within the room. Bond each rack with a Rack Bonding Conductor (RBC). The RBC is a stranded copper #6 conductor connected to the vertical rack bonding terminal. All connections shall be irreversible crimp connections. Route conductor so as to minimize the quantity of sweeping bends.

1.4 SUBMITTALS

A. Refer to Section 270000

1.5 QUALITY ASSURANCE

A. Refer to Section 270000.

1.6 DELIVERY, STORAGE, AND HANDLING

A. Refer to Section 270000.

B. The Contractor shall ship on manufacturer's standard reel sizes of one continuous length. Where cut lengths are specified, mark reel quantity accordingly.

PART 2 - PRODUCTS

2.1 ACCEPTABLE MANUFACTURERS

A. Subject to compliance with requirements, manufacturers that may be incorporated in the work, include:

B. Cable Manufacturers

1. Houston Wire and Cable Company
2. Okonite Company
3. General Cable
4. Pirelli Cable Corporation
5. Triangle Wire and Cable
6. Owner Approved Alternate

C. Electrical Service Entrance Bonding Conductor and Connector Manufacturers

1. Copperweld
2. Thomas & Betts
3. Blackburn
4. Owner Approved Alternate

D. Exothermic Connector Manufacturers

1. Erico Products (Cadweld)
2. Continental Industries (thermOweld)
3. Harger
4. Owner Approved Alternate

E. Crimp Connector Manufacturers

1. Thomas & Betts
2. FCI Burndy Electrical
3. O-Z/Gedney
4. Owner Approved Alternate

F. Telecommunication Grounding Busbars

1. Chatsworth
2. Panduit
3. Leviton
4. Owner Approved Alternate

G. Bonding Straps

1. Chatsworth
2. Harger
3. Brundy
4. Owner Approved Alternate

H. C-Type Compression Taps

1. Brundy
2. Harger
3. Owner Approved Alternate

I. Antioxidant Joint Compound

1. Chatsworth
2. Owner Approved Alternate

J. Labeling

1. Refer to Section 270000.

K. Firestopping

1. Refer to Section 270000.

2.2 MATERIALS

A. Communications Grounding Conductors: Copper American Wire Gauge (AWG) wire of the following sizes:

1. Bonding Conductor for Telecommunications (BCT): #4/0 (unless otherwise sized by the Electrical Engineer of Record)
2. Telecommunication Bonding Backbone (TBB): #3/0 (unless otherwise sized by the Electrical Engineer of Record)
3. Grounding Equalizer (GE): equal AWG as the TBB (unless otherwise sized by the Electrical Engineer of Record)
4. Telecommunications Equipment Bonding Conductor (TEBC): #4
5. Rack Bonding Conductor (RBC): #6

B. Grounding Connectors

1. Connectors shall be a copper alloy material and two-hole, double-crimp compression lug type at the connecting ends.

C. Telecommunications Main Ground Busbar (TMGB)

1. Use pre-drilled copper busbar with standard NEMA bolt hole sizing and spacing for the type of connectors.
2. Sized for the immediate requirements and allow for 25% growth.
3. The minimum dimensions shall be 0'-¼" thick X 0'-4" wide X 1'-8" long.
4. Contain (2) tiers of pre-drilled holes for use with standard sizes of two-hole copper compression lugs.
5. ASTM-B187-C11000 Copper bar suitable for use with two-hole compression-type copper lugs.

D. Telecommunications Ground Busbar (TGB)

1. Use pre-drilled copper busbar with standard NEMA bolt hole sizing and spacing for the type of connectors.
2. Sized for the immediate requirements and allow for 25% growth.
3. The minimum dimensions shall be 0'-¼" thick X 0'-4" wide X 0'-10" long.
4. Contain (2) tiers of pre-drilled holes for use with standard sizes of two-hole copper compression lugs.
5. ASTM-B187-C11000 Copper bar suitable for use with two-hole compression type copper lugs.

PART 3 - EXECUTION

3.1 EXAMINATION

A. Refer to Section 270000

3.2 PREPARATION

A. Refer to Section 270000.

B. Copper and copper alloy connections should be cleaned prior to connection.

3.3 INSTALLATION

A. Refer to Section 270000.

B. The Contractor shall install the work in accordance with the specifications, drawings, manufacturer's instructions and approved submittal data.

C. All work shall be supervised and reviewed by the Contractor's on-site RCDD.

D. Installation plans and Requests For Information (RFIs) shall be reviewed by the Contractor's RCDD.

E. General

1. Bonding and grounding procedures and components shall comply with ANSI/TIA-607-B "Commercial Building Grounding (Earthing) and Bonding Requirements for Telecommunications".
2. Bonding should be accomplished such that the bonding system is integrated and compliant with NEC specifications.
3. Bonding conductors shall be routed with minimum bends or changes in direction and should be made directly to the points being bonded.
4. Bonding connections should be made by using compression copper lugs. However, for parts of the ground electrode system that are subject to corrosion, must carry high currents reliably, or for locations that require minimum maintenance, connections are made with low emission exothermic welding (see NEC Article 250).
5. Make connections to dry surfaces only.
6. Remove paint, rust, oxides, scales, grease and dirt from surfaces before making connection.
7. Burnish clean a 0'-1" X 0'-1" area, drill, tap, apply an adequate amount of antioxidant joint compound mixed for the metal surface types affected, and bolt conductor and connector to burnished and compounded area. Ensure proper conductivity.
8. Route bonding conductor(s) the shortest distance between bonding contact points.
9. The ground-wire connecting ends shall have a minimum amount of insulation removed at the ground lug.
10. Do not connect ground wire in power cable assemblies to the telecommunications ground system.
11. All grounding and bonding conductors shall be copper and may be insulated. If bare-bonding conductors are used, isolate bonding conductors and prevent contact.
12. Antioxidant material shall be installed to separate dissimilar metals and prevent corrosion.
13. If multiple systems are involved (lightning protection systems, communications, radio and TV, CATV, etc.), those systems shall be bonded together to minimize potential differences between the systems, per NEC 250.94.

F. Telecommunication Bonding Conductors

1. Each telecommunications grounding and bonding conductor shall be labeled at each end detailing the function and room number of its opposite end. Labels shall be located on conductors as close as practicable to their point of termination in a readable position. Labels shall be nonmetallic and include the following text, "TELECOMMUNICATIONS GROUND - DO NOT REMOVE. IF THIS CONNECTOR OR CABLE IS LOOSE OR MUST BE REMOVED, PLEASE CALL THE BUILDING TELECOMMUNICATIONS MANAGER".

2. Furnish and install all required bonding material, hardware, and utilize tools manufactured for this purpose.
3. The connections of the BCT, TBB, GE, TEBC, and RBC shall be made using low emission exothermic welding or hydraulically crimped with a double crimp connector. Two-hole grounding lugs are preferred for connection to the grounding bus bars.

a) All low emission exothermic welding shall be by Division 26.

b) Coordinate with the building services personnel in occupied spaces to prevent the smoke from the exothermic weld process from potentially setting off smoke/fire alarms.

4. Grounding and bonding conductors should not be placed in ferrous metallic conduit. If it is necessary to place grounding and bonding conductors in a ferrous metallic conduit that exceeds 1m (3ft) in length, the conductors shall be bonded to each end of the conduit using a grounding bushing or a No. 6AWG conductor, minimum.
5. The bonding conductors should be installed without splices.

a) Where splices are necessary, the number of splices should be minimized, be accessible, and be located within the telecommunications spaces.

b) Joined segments of a bonding conductor shall be connected using exothermic welding, irreversible compression-type connectors, or equivalent. All joints shall be adequately supported and protected from damage.

G. Equipment Cabinets and Racks

1. The busbar shall be installed at the base and back of each cabinet/rack for floor fed cabinets/racks.
2. The busbar shall be installed at the top and back of each cabinet/rack for top fed cabinets/racks.
3. Each cabinet and rack shall be provided with a minimum # 6 AWG ground wire.
4. Do not loop from cabinet/rack to cabinet/rack.
5. Each cabinet or rack bay against the wall shall be bottom/side ground fed from the wall.

a) Wall ground feeds/raceways to racks shall not be exposed on the walls.

b) Exception: Some cabinet or rack bays will require the ground to be fed from the ceiling raceway.

6. All ground raceways within each cabinet/rack or cabinet base and adjacent-ganged cabinet base shall be an insulated metallic flex type raceway and shall not interfere with equipment mounting frames or equipment mounting brackets.

H. Cable Runway, Cable Raceway and Support System Grounding

1. The Contractor shall provide communications cable tray and cable runway systems with a communications dedicated ground from the TGB.
2. All cable tray needs to be electrically continuous per NEC 250.96.

a) Metal raceways, wire-mesh cable trays, cable armor, cable sheath, enclosures, frames, fittings, and other metal non-current-carrying parts that are to serve as an alternate grounding path, with or without the use of supplementary equipment grounding conductors, shall be effectively bonded where necessary to ensure

electrical continuity and the capacity to conduct safely any fault current plausibly to be imposed on them.

b) Any nonconductive paint, enamel, or similar coating shall be removed at the threads, contact points, and contact surfaces.

c) Grounding or bonding conductors shall be connected by fittings designed for that purpose to ensure adequate bonding.

3. The Contractor shall provide and install a #6 AWG ground wire to bond one end of each cable tray/runway system to the TGB.
4. For electrically non-continuous conduits that contain only grounding conductor, the Contractor shall bond the conduit and conductor together at both ends to ground to the nearest TGB with grounding bushings or ground clamps.

I. Shielded Backbone Cabling

1. The Contractor shall terminate and bond the shield to the nearest TGB or TMGB at both ends, following manufacturer's guidelines.

3.4 FIELD QUALITY CONTROL

A. Testing

1. Upon completion of the electrical system, including all grounding, the Electrical Contractor shall test the system for stray currents, ground shorts, etc.
2. Approved instruments, apparatus, services, and qualified personnel shall be utilized.
3. If stray currents, shorts, etc., are detected, eliminate or correct as required.

END OF SECTION 270526

SECTION 27 05 28
PATHWAYS FOR COMMUNICATIONS SYSTEMS

PART 1 - GENERAL

1.1 SUMMARY

A. Section Includes

1. Hangers and Supports, including open-top supports (cable hooks) for communications systems.
2. Conduits and Pull Boxes for communications systems.
3. Cable Tray and Cable Runway with associated accessories and fittings for communications systems.

B. Related Sections

1. Section 270000 Communications Systems
2. Section 270526 Grounding and Bonding for Communications Systems
3. Section 271100 Communications Equipment Room Fittings
4. Section 271500 Communications Horizontal Cabling

1.2 REFERENCES

A. The publications referenced in Section 270000 form a part of this specification. The publications are referred to in the text by basic designation only.

B. Specific reference in specifications to codes, rules, regulations, standards, manufacturer's instructions, or requirements of regulatory agencies shall mean the latest printed edition of each in effect at the date of contract unless the document is shown dated.

C. Conflicts

1. Refer to Section 270000.

D. Codes and Standards

1. Refer to Section 270000.

1.3 SUBMITTALS

A. Refer to Section 270000.

1.4 QUALITY ASSURANCE

A. Refer to Section 270000.

1.5 DELIVERY, STORAGE, and HANDLING

A. Refer to Section 270000.

B. Conduit Storage

1. Package conduits in bundles maximum 10'-0" long, with conduit and coupling thread protectors for indoor/outdoor storage.
2. Package fittings in manufacturer's standard quantities and packaging suitable for indoor storage.

3. Protect coating on plastic-coated rigid conduit, fittings, and bodies from damage during shipment and storage.
4. Store conduit above ground on horizontal racks to prevent corrosion and entrance of debris.
5. Equipment and components shall be protected from the weather, humidity, temperature variations, dirt, dust, or other contaminants. Protect plastic conduit and inner duct from sunlight. Equipment damaged prior to system acceptance shall be replaced at no cost to the Owner.

PART 2 - PRODUCTS

2.1 ACCEPTABLE MANUFACTURERS

A. Subject to compliance with requirements, manufacturers that may be incorporated in the work, include:

B. Cable Hooks

1. Cooper B-Line, Inc.
2. Erico
3. Caddy
4. Owner approved alternate

C. Basket Type Cable Tray (for use in work areas)

1. Cooper B-Line, Inc.
2. Chatsworth (CPI)
3. Owner approved alternate

D. Wire Basket Cable Tray Cutting Tool

1. Cooper B-Line, Inc.
2. Chatsworth (CPI)
3. Owner approved alternate

E. Polyethylene Cable Support System

1. Erico
2. Owner approved alternate

F. Innerduct

1. Carlon Riser Guard Flexible Raceway (corrugated innerduct)
2. Owner approved alternate

G. Measured pull tape (pull tape printed with sequential footage markings)

1. Fibertek
2. Condux International
3. Owner approved alternate

H. Labeling

1. Refer to Section 270000.

I. Firestopping

1. Refer to Section 270000.

2.2 CABLE HOOKS

A. Cable hooks shall be factory assembled for direct attachment to walls, hanger rods, beam flanges, purlins, strut, floor posts, etc. to meet job conditions.

B. Features

1. Cable hooks shall have a flat bottom and provide a minimum of 0'-1.625" cable-bearing surface.
2. Cable hooks shall have 90° radius edges to prevent damage while installing cables.
3. Cable hooks shall be designed so that the mounting hardware is recessed to prevent cable damage.
4. Cable hooks for non-corrosive areas shall be pre-galvanized steel. Where additional strength is required, cable hooks shall be spring steel with a zinc-plated finish.
5. Cable hooks for corrosive areas shall be stainless steel.
6. Cable hooks shall have a stainless steel cable latch retainer to provide containment of cables within the hook.
7. The retainer shall be removable and reusable.

C. Factory assembled multi-tiered cable hooks shall be used where required to provide separate cabling compartments, or where additional capacity is needed.

D. Load cable hooks in accordance with manufacturer requirements and recommendations.

E. Provide capacity for 25% growth, add additional hooks as needed.

2.3 PULL BOXES, JUNCTION BOXES, AND GUTTERS

A. All junction boxes, gutters and pull boxes shall be UL listed and comply with NEC requirements.

B. All junction boxes, gutters and pull boxes shall meet the following minimum material requirements:

1. 16-gauge steel or heavier
2. Seams shall be continuously welded and grounded smooth
3. External screws and clamps
4. External mounting feet (where applicable)
5. Oil-resistant gasket and adhesive
6. ANSI 61 gray polyester powder coating inside and out over phosphatized surface

C. All junction boxes, gutters and pull boxes shall be provided with bushings for conduits and/or cabling.

D. All junction boxes, gutters and pull boxes shall be securely installed.

2.4 CONDUITS

A. All conduits shall be UL listed and comply with NEC requirements.

B. Conduit Fittings

1. All fittings shall be compression or threaded.

2. Fittings shall provide a secure connection for pulling communications cables.
3. Setscrew fittings are not permitted.
4. Conduit “condulets” are not permitted.

C. Non-metallic conduits are not permitted in above ground installations. Conversion fittings are required for non-metallic (below ground) to metallic (above ground) transitions.

D. Innerduct:

1. All fiber shall be installed in innerduct unless fiber cabling is armored.
2. Shall be constructed of non-metallic material.

E. Only manufacturer’s fittings, transition adapters, terminators and fixed bends shall be used.

F. Measured Pull Tape

1. Pre-lubricated, woven polyester, low friction, and high abrasion resistant yarn with footage markers printed on the tape.
2. Minimum average tensile strength shall be 1130 lbs. for 0’-1.5” and smaller conduits and innerduct.
3. Minimum average tensile strength shall be 1800 lbs. for conduits larger than 0’-1.5”.

G. Fill and Bend Radius

1. Conduit fill shall comply with NEC requirements.
2. The minimum bend radius is 6 X the conduit inside diameter (ID) for 0’-2” conduit or less.
3. The minimum bend radius is 10 X the conduit ID for a conduit greater than 0’-2”.
4. There shall be no more than two 90° bends (180° total) between conduit pull boxes.
5. Changes in direction shall be accomplished with sweeping bends observing minimum bend radius requirements above.
6. Do not use pull boxes for direction changes unless specifically designated otherwise in the drawings.
7. Unless otherwise noted in the drawings, conduits entering pull boxes shall be aligned with exiting conduits.

H. Routing

1. Conduits shall be routed in the most direct route possible, with the fewest number of bends possible.
2. There shall be no continuous conduit sections longer than 100’-0” for premises conduits. For runs that total more than 100’-0”, insert junction or pull boxes so that no continuous run between pull boxes is greater than 100’-0”.

I. Penetrations

1. All conduit penetrations shall comply with all applicable fire codes.
2. All conduit penetrations in fire-rated walls or floors shall be sealed and fire-proofed to meet or exceed the designed rating of the penetration area.

2.5 CABLE TRAY

A. Cable tray systems are defined to include, but are not limited to, straight sections of cable trays, bends, tees, elbows, reducers, crosses, wyes, vertical bends, up/down tees, cable support fittings, drop-outs, supports and accessories.

B. Install all tray types utilizing manufacturer recommended installation instructions and applicable standards.

C. Load cable tray and cable runway in accordance with manufacturer requirements and applicable standards.

D. Cable Tray Materials

1. Aluminum
2. Pre-galvanized Steel
3. Hot-dip Galvanized Steel
4. Stainless Steel
5. Yellow Zinc Dichromate
6. Pre-Galvanized Zinc
7. Electro-Galvanized Zinc

E. Cable Tray Systems

1. Wire basket (mesh) of types and sizes indicated on the drawings; with connector assemblies, clamp assemblies, connector plates, splice plates, cable drop outs, bonding accessories, and splice bars. Construct units with rounded edges and smooth surfaces.
2. Continuous mesh polyethylene cable-support system: with connector assemblies and appropriate support components. All parts shall be UL-listed. Plastic (non-metallic) parts shall have a zero detectable halogen content as substantiated by an independent test laboratory.
3. Ladder type trays shall consist of two longitudinal members (side rails) with transverse members (rungs) welded to the side rails. Rungs shall be spaced 0'-9" on center. Spacing in radius fittings shall be 0’-9” as measured at the center of the tray's width. Rungs shall have a minimum cable-bearing surface of 0’-.875” with radius edges. No portion of the rungs shall protrude below the bottom plane of the side rails.
4. Ventilated trough type trays shall consist of two longitudinal members (side rails) with a corrugated bottom welded to the side rails.
5. Solid bottom trough type trays shall consist of two longitudinal members welded to the side rails.

F. Cable trays shall have sufficient depth and width so as not to exceed a maximum 50% fill ratio, including 25% capacity for anticipated growth.

G. All straight sections shall be supplied in minimum 8’-0” lengths, except where shorter lengths are permitted to facilitate tray assembly lengths.

2.6 HANGERS AND SUPPORT

A. Steel support brackets shall be galvanized steel and capable of supporting a minimum of 200 lbs with a safety factor of 3.

B. Steel support brackets shall have a removable galvanized steel retaining strap.

C. Steel support brackets shall accept 0’-3/8” (10mm) threaded rod for attachment to building structure or sub structure.

PART 3 - EXECUTION

3.1 EXAMINATION

A. Refer to Section 270000.

3.2 PREPARATION

A. Refer to Section 270000.

B. Verify system is properly sized for cables before installation.

C. Verify that the manufacturer recommended loads are not exceeded.

D. Verify general routing and coordinate locations with other trades before installation. Layout cable runs in advance to determine quantities of cable to be installed along pathways, and to ensure non-interference from other trade installations.

3.3 INSTALLATION

A. Refer to Section 270000.

B. Cable Hooks

1. Provide cable hook (j-hook) cable support system for horizontal and/or riser cabling in accessible ceiling space. Assemblies shall be complete with mounting hardware.
2. Provide threaded rod for supporting hangers when hanging from floor deck and deck members.
3. Follow manufacturers fill capacities.
4. Locate cable hooks on 4’ to 5’ centers to adequately support and distribute the cable’s weight.
5. Suspended cables shall be installed with at least 0’-3” of clear vertical space above the ceiling tiles and support channels.
6. For larger quantities of cables, provide special supports that are specifically designed to support the required cable weight and volume.
7. Do not support pathways or cables with the ceiling suspension system or use electrical, plumbing, or other pipes for support.
8. Cable supports shall be permanently anchored to building structure or substrates. Provide attachment hardware and anchors designed for the structure to which attached, and that are suitably sized to carry the weight of the cables to be supported.
9. Secure and support exposed horizontal cable at intervals not exceeding 5’-0” and not less than 1’-4” (16”) from cabinets, pack pole, boxes, fittings, outlets, racks, frames, and terminals.
10. Cable sag between vertical supports for horizontal pathway shall not exceed 0’-6”. Provide at least 0’-3” cable sag between supports.
11. Painted J-hooks shall meet or exceed NEC requirements for the environment in which the product is installed.

C. Conduit and Pull Boxes

1. The Contractor shall route the conduit in approximate locations unless drawing is dimensioned for precise placement.
2. Conduit cuts shall be square. Ream ends of burrs, and remove metal shavings and cutting lubricants before conduit is connected to the conduit system.

3. For conduit embedded in concrete, coat threaded connections in conduits with colloidal rust and corrosion inhibitor and sealant. Conduit must be clean and dry and must pass standard sizing test after concrete is poured.
4. Cap unused conduits with watertight caps
5. Make conduit connections with appropriate fittings and tighten securely.
6. Use appropriate tools to install PVC coated conduit; avoid damage to exterior coating.
7. Install liquid-tight flexible metal conduit where exposed to weather, water, or other liquids.
8. Use IMC, PVC conduit, or rigid galvanized steel conduit in underground installations.
9. The Contractor shall provide fabric innerduct in all underground conduits, as indicated on the drawings.

a) The Contractor shall use pre-lubricated, woven polyester, low friction, and high abrasion resistant fabric.
b) The Contractor shall be trained for proper installation technique by the innerduct manufacturer. The Contractor shall coordinate with the owner to demonstrate that pull ropes in each inner duct cell move freely from end to end.

D. Cable Tray and Cable Runway

1. Cut wire basket tray members square with approved cable tray cutting tool as to not leave sharp edges at cut point. Remove burrs and smooth the ends before the cut is connected to wire-mesh tray system.
2. Ensure that standard splices are designed to have less than 1 milliohm (0.0001 Ω) of resistance between connections and provide bonding between sections. Painted wire mesh tray requires the outer mask of the non-conductive surface be removed at each end of the tray prior to installing the splice to provide continuity between painted tray sections.
3. Threaded rod (minimum 0'-½" diameter) or equivalent and slotted channel shall be used for hanging cable tray between floor deck and deck members

E. Fiber Support:

1. Support vertical fiber optic cable with basket weave wire/cable grips. Support fiber riser with single weave support grip with a single offset eye.
2. Mount/attach pulling eye to a wall or ceiling deck secured hook to support/provide strain relief to riser cable. Provide a minimum 3'-0" loop of fiber prior to entering fire stopped floor sleeve.
3. Where required coil up slack fiber cable into pull box and secure with single weave support grip.

F. Clearances

1. A minimum of 1'-0" access headroom shall be provided above a cable tray. Ensure that other building components do not restrict access to the cable trays from the sides.
2. Power outlets shall not be installed in or mounted to cable tray or cable runway.
3. Provide 3'-0" of unencumbered space for every 10'-0" segment of tray.
4. Cable tray clearances

a) Motors or transformers: 4'-0"
b) Power cables and conduit: 1'-0"
c) Fluorescent lighting: 0'-5"
d) Halide lights: 1'-0"
e) Above the ceiling tiles: 0'-3"

f) Access above and on one side of the cable tray: 1’-0”

3.4 FIELD QUALITY CONTROL

A. Test system to ensure electrical continuity of bonding and grounding connections.

B. Ensure compliance with specified maximum ground resistance.

C. Refer to NFPA 70B Chapter 18 for testing and test methods.

3.5 CLEANING

A. Remove all unnecessary tools and equipment, unused materials, packing materials, and debris from each area where Work has been completed unless designated for storage.

B. Wipe clean all cable trays and apply appropriate manufacturer’s paint to areas that have been scratched.

END OF SECTION 270528

SECTION 27 05 43

UNDERGROUND DUCTS AND RACEWAYS FOR COMMUNICATIONS SYSTEMS

PART 1 - GENERAL

1.1 SUMMARY

A. This section includes underground communications duct banks, hand-holes and maintenance holes

B. Related Sections

1. Section 260000 Electrical (including related sub-sections)
2. Section 270000 Communications Systems
3. Section 270526 Grounding and Bonding for Communications Systems
4. Section 270528 Pathways for Communications
5. Section 271100 Communications Equipment Room Fittings
6. Section 271300 Communications Backbone Cabling
7. Section 271500 Communications Horizontal Cabling
8. Section 274133 Master Antenna Television Systems
9. Section 280000 Electronic Security (including related sub-sections)

1.2 REFERENCES

A. Refer to section 270000

B. Conflicts

1. Refer to section 270000

C. Codes and Standards (Most recent editions or as required in contract)

1. National Electrical Manufacturers Association (NEMA)
   a) RN1 Polyvinyl-Chloride (PVC) Externally Coated Galvanized Rigid Steel Conduit and Electrical metallic Tubing
   b) TC2 Electrical Plastic Tubing (EPT) and Conduit (EPC-40 and EPC-80)
   c) TC3 PVC Fittings for Use with Rigid PVC conduit and tubing

2. Underwriters Laboratories (UL)
   a) 651 Schedule 40 and 80 Rigid PVC conduit
   b) 651A Type EB and A Rigid PVC Conduit and HDPE Conduit

3. ANSI/TIA-569-A Commercial Building Standard for Telecommunications Pathways and Spaces
4. ANSI/TIA-758-A Customer-owned Outside Plant Telecommunications Standard.
5. BICSI Telecommunications Distribution Methods Manual (TDMM)
6. Standard for Riser Application for Optical Fiber Raceway
7. BICSI Customer Owned Outside Plant (CO-OSP) Design Manual
8. Local, county, state and federal regulations and codes in effect as of date of installation
9. Equipment of foreign manufacture must meet U.S. codes and standards.
   a) It shall be indicated in the proposal the components that may be of foreign manufacture, if any, and the country of origin.

10. ANSI/IEEE C2-2007, National Electrical Safety Code (NESC), 2007 Edition

D. Related Documents

1. Refer to section 270000

1.3 SUBMITTALS

A. Refer to section 270000

1.4 QUALITY ASSURANCE

A. Refer to section 270000, and ANSI/IEEE C2-2007

B. Follow Annex B of National Electrical Code (NEC)

C. Items of the same classification shall be identical. This requirement includes equipment, assemblies, parts, and components.

1.5 DELIVERY, STORAGE, AND HANDLING

A. Deliver ducts to Project site with ends capped.

1. Store nonmetallic ducts with supports to prevent bending, warping, and deforming

B. The contractor shall endeavor to make the site ready for installation of manholes when delivered so that they can be placed off of the truck into final position.

1. When this is not possible, store precast concrete and other factory-fabricate underground utility structures as Project site as recommended by manufacturer to prevent physical damage. Arrange so identification markings are visible.

C. Lift and support precast concrete units only at designated lifting or supporting points.

D. Clearly mark containers "For Communications Duct Banks Only".

E. Refer also to section 270000

1.6 WARRANTY

A. Refer to section IEEEC2

B. Refer also to section 270000

1.7 MAINTENANCE

A. Refer to section IEEEC2

B. Refer also to section 270000

PART 2 - PRODUCTS

2.1 ACCEPTIBLE MANUFACTURERS

A. Ducts

1. Use owner approved solution

B. Hand Holes

1. Christy Concrete Products
2. Cretex Concrete Products West, Inc.; Riverton Division
3. Oldcastle Precast Group
4. Oldcastle Precast Inc/; Utility Vault Division
5. Utility Concrete Products, LLC
6. Owner Approved equivalent

C. Maintenance (Man) Holes

1. Christy Concrete Products
2. Cretex Concrete Products West, Inc.; Riverton Division
3. Oldcastle Precast Group
4. Oldcastle Precast Inc/; Utility Vault Division

5. Utility Concrete Products, LLC
6. Owner Approved equivalent

2.2 MATERIALS

A. Continuous Tape for Underground Conduit

1. The Contractor shall use orange warning ribbon, PVC tape (detectable, i.e., containing metallic tracings), three inches wide, permanently imprinted with "CAUTION--BURIED COMMUNICATIONS LINE BELOW" in black letters, minimum 0'-1" high.

B. Labeling

1. Refer to section 270000

C. Firestopping

1. Refer to section 270000

PART 3 - EXECUTION

3.1 EXAMINATION

A. Where necessary, Contractor shall provide all excavation, boring, trenching, backfill and restoration of grounds for all OSP pathways.

1. In addition, Contractor shall include all labor, materials, and equipment.

B. The owner of the property has the option to obtain a testing laboratory to ensure proper soil compaction.

C. All work shall comply with all city, county and State Codes, NEC, EIA/TIA, OSHA, and BICSI TDMM requirements, codes and standards.

D. The above referenced codes and standards are to be considered as a minimum requirement.

1. If the plans or specifications call for material and/or methods of construction higher than the standard, the plans or specification shall govern.

E. All holes, trenches and/or any other excavation shall be covered, fenced, and/or taped off to make the area safe at all times.

1. Conform to general Contractor requirements.

F. The Contractor will visit the job site prior to submitting a proposal to determine existing conditions.

1. Contractor shall evaluate the site for materials, and any other information that may affect the work to be performed.

G. The Contractor shall locate and protect all existing conduits.

1. Should damage occur notify the appropriate utility.
2. Damage costs are the responsibility of the Contractor.

H. The Contractor shall CALL BEFORE YOU DIG, One Call Directory Telephone Numbers (Texas: 1-800-245-4545, 1-800-344-8377) to locate any existing conduits (Power, Gas, Telephone, and other utilities) prior to start of work.

I. Any proposed re-routing of all trenches/pole lines shall be reviewed and approved by the owner/consultant.

3.2 PREPARATION

A. Refer to Section 270000

B. The Contractor shall verify materials are on-site in proper condition and of sufficient quantity.

C. The Contractor shall verify proper excavation depth (minimum 4'-0" below finished grade), width, route and support of work.

1. Verify proper location of hand-holes and maintenance holes (minimum every 350'-0").
2. Communications facilities must be placed in separate hand-holes and maintenance holes from electrical facilities.

D. Trenches greater than or equal to 5'-0" deep shall:

1. Be shored to prevent cave-in.
2. Have 2'-0" clearance from the dirt pile.

E. Directional boring is a suitable option when trenching is impractical or impossible.

1. Locating existing underground utilities is crucial when directional boring is planned because of the potential for the drilling unit to encounter high voltages.
2. Although directional boring machines are manufactured with electrical strike sensing capabilities, which can warn the operator of any contact with a high voltage source, accidents may still occur.
3. Operators of directional boring machines require special protection due to the potential for exposure to high voltage.
    a) Therefore, operators must always have a ground mat grid underfoot as insulation protection.
    b) In addition, operators must wear insulating boots and gloves, along with hard hats and safety glasses.

F. Minimum separation between electrical and communications underground cable (measured from conduit sidewall:

1. Concrete: 0'-3"
2. Masonry: 0'-4"
3. Well-tamped earth: 1'-0"

G. Before encasement, the Contractor shall:

1. Prove and verify all ducts are free of debris and properly installed in support and spacer system.
2. Verify the system is properly fitted together and hold-down hardware is properly installed.
3. Verify ducts are capped at both ends

3.3 INSTALLATION

A. Refer to section 270000

B. Hand Holes

1. Unless otherwise shown, Hand-holes shall be at least 4'-0" X 4'-0" and shall be constructed of 0'-2" thick cement covered with 0'-3/8" steel plate.
2. The hand-hole or maintenance hole shall rest on a 0'-4" blanket of sand, and 0'-4" around the sidewalls shall be filled with sand.
3. Each hand-hole or maintenance hole which contains a pedestal shall have four bollards installed 1'-6" (18") diagonally from each corner, with a cross member welded at 2'-6" (30") connecting the four corners.

a) These barriers will be constructed of 0'-4" ridged conduit filled with concrete, driven 4'-0" in the ground and extending 3'-0" above the protective cover.

4. All Hand-holes shall have a hasp and locking plate installed so they can be locked with padlock.

C. Maintenance (Man) Holes

1. Precast concrete maintenance hole components shall be in accordance with ASTM C 478.
2. Maintenance hole components shall be designed for H-20 highway wheel loading and specific site conditions.
3. Maintenance hole bases may be either precast or cast-in-place, as appropriate for the application, with a formed recess shaped to match the first precast shaft section.

a) The maintenance hole base shall extend 0'-10" below the bottom of the lowest pipe and 0'-6" above the top of the largest pipe.

4. Maintenance hole shafts shall be fabricated only from precast shaft sections, eccentric cone sections and grade rings.
5. Precast maintenance holes shall utilize either an integrally cast embedded pipe connector, or a boot-type connector installed in a circular block out opening in accordance with ASTM C 923.

a) Connections to existing maintenance holes shall utilize a boot-type connector per ATSM C 923 installed in a cored opening.
b) Cast-in-place bases shall incorporate a ring-type seal on the pipe to be imbedded in the concrete.

D. Concrete and Reinforcing Steel for Encasement

1. Furnish products following Division 03, except strengths as follows:

a) Compressive Strength: 2500 psi at 28 days, class A
b) Flexural Strength: 500 psi at 28 days
c) Dye concrete encasement "orange" to identify communications conduit

E. The Contractor shall install conduit in excavations following drawings.

1. If directional boring is utilized, cable or flexible conduits can be attached to the unit and pulled back to the origination point (after the drilling unit reaches its destination).

F. The Contractor shall install watertight penetrations through foundation, hand-hole and maintenance-hole walls.

1. Wherever a hand-hole is used to simply pass through, the conduit entrances and exits will be situated at opposite ends of the hand-hole instead of 90° angles.

G. The Contractor shall assemble duct banks with non-magnetic saddles, spacers and separators.

1. Position separators for 0'-2" minimum concrete separation between outer surfaces of adjacent ducts, and:

a) Make uniform required bends with a minimum 2'-0" radius for conduits less than 0'-3" diameter, and a minimum 4'-0" radius for conduits 0'-3" and larger.

b) Maintain vertical or horizontal separations of 1’-0” of well-packed topsoil from any electrical service conduit run parallel to communications conduits.

H. Install concrete encasement fully surrounding reinforcing steel and ducts

I. Unless otherwise noted on the drawings, reinforce with longitudinal #5 steel bars placed at each corner and along each face at maximum parallel spacing of 1’-0” on center, and #5 tie-bars transversely placed at 1’-0” on center maximum longitudinal.

1. Maintain maximum clearance of 0’-2” from bars to edge of forms and ducts.

J. For duct banks that are being installed for future use, extend rebar well past end of concrete for future tie-in to future concrete pour to ensure that both sections are firmly tied together to prevent slippage between the two pours.

K. Add orange colorants at mixing site at the rate of 10 lbs per cubic yard for voice and data cable.

L. Place concrete with minimum 0’-2” cover surrounding ducts and reinforcement.

M. Maintain ducts in proper place during concrete placement.

N. For duct banks that are being installed for future use, all conduits shall be extended minimum of 1’-0” past the end of the concrete and capped.

O. Transition from nonmetallic to metallic conduit where duct banks enter structures or turn upward for continuation above grade

1. Where ducts enter structures such as hand-holes, maintenance holes, pull boxes, or buildings, terminate ducts in proper end bells, insulated L-bushings, Meyers hubs or couplings on steel conduits.
2. Ducts shall be sealed to prevent water and debris from entering the building.

P. Extend below grade conduits to 0’-4” above the finished floor inside a building.

1. Cover or temporarily seal open conduit ends to prevent water and other foreign matter from entering conduit.

Q. Tag conduits entering pull boxes with stamped stainless steel tags following cable and conduit schedule.

R. Backfill after concrete cures 24 hours.

S. The Contractor shall pull a 1’-0” long mandrel (0’-¼” smaller than duct diameter) through ducts.

1. Pull a rag swab or sponge through to remove debris, until it shows clean.

T. Where fiber optic cables will be used and/or where indicated in the drawings, innerduct shall be provided.

U. The Contractor shall provide a metered pull tape in all underground conduits and innerduct:

1. Pre-lubricated, woven polyester, low friction, and high abrasion resistant yarn.
2. Minimum average tensile strength shall be 1130 lbs for 0’-1.5” and smaller conduits and innerduct.
3. Minimum average tensile strength shall be 1800 lbs for conduits larger than 0’-1.5”.

3.4 CLEANING

A. Refer to section 270000

END OF SECTION 2700543

SECTION 27 11 00

COMMUNICATIONS ROOM FITTINGS

PART 1 - GENERAL

1.1 SUMMARY

A. This section includes basic communications and equipment room design requirements and fittings including:

1. Equipment cabinets, racks, frames and enclosures
2. Cable management and ladder racks
3. Telecommunications service entrance pathways
4. Rack mounted power protection and power strips

B. Related Sections

1. Section 270000 Communications
2. Section 270526 Grounding and Bonding for Communications Systems
3. Section 270528 Pathways for Communications
4. Section 271500 Communications Horizontal Cabling

1.2 REFERENCES

A. The publications listed below form a part of this specification. The publications are referred to in the text by basic designation only.

B. Specific reference in specifications to codes, rules, regulations, standards, manufacturer's instructions, or requirements of regulatory agencies shall mean the latest printed edition of each in effect at the date of contract unless the document is shown dated.

C. Conflicts

1. Refer to section 270000

D. Codes and Standards (Most recent editions or as required in contract)

1. ANSI/TIA-568-C: Commercial Building Telecommunications Wiring Standard
2. ANSI/TIA-569-B: Commercial Building Standard for Telecommunications Pathways and Spaces
3. ANSI/TIA-606-A: Administration Standard for Commercial Telecommunications Infrastructure
4. ANSI/NECA/BICSI-607-A: Commercial Building Grounding (Earthing) and Bonding Requirements for Telecommunications
5. TIA-758-A: Customer-Owned Outside Plant Telecommunications Infrastructure Standard
6. National Electrical Code (NEC), based upon year approval by local codes or AHJ
7. BICSI Telecommunications Distribution Methods Manual (TDMM)
8. Local, county, state and federal regulations and codes in effect as of date of purchase
9. Equipment of foreign manufacture must meet U.S. codes and standards. It shall be indicated in the proposal the components that may be of foreign manufacture, if any, and the country of origin.

1.3 COMMUNICATIONS ROOMS

A. Communications rooms must be dedicated to designated equipment and services:

1. Space shall not be used for storage of equipment not related to designated equipment and services.
2. Hazardous or corrosive materials shall not be stored in the space.

3. Piping, ductwork and distribution of power, not related to designated equipment and services shall not pass through or be located within the space.
    a) Foreign piping such as water pipes, steam pipes, soil pipes, sanitary drains, storm drains, A/C ducts, and other unrelated systems utilized for or containing liquids, or gases shall not be installed or pass through communication rooms.
    b) With the exception of fire sprinklers, all water pipes shall be routed around communications room.

B. Each communication room shall be equipped with fire detection, fire-extinguishing system and prevention devices. Connect detection devices to base building fire alarm system. A minimum of one (1) smoke detector shall be installed in each communications room.

C. Walls shall be covered with 0'-¾" X 4'-0" X 8'-0" AC-grade plywood backboard 1'-0" AFF (smooth side to interior of room mounted vertically), capable of supporting mounted hardware and equipment.
1. Plywood shall be affixed to the studs in the walls with screws that penetrate the studs a minimum of 0'-1", are spaced not greater than 1'-6" (18") apart in each stud, and with screws 0'-0" from the top and bottom of plywood.
2. Plywood shall be sealed against the wall and painted on all exposed sides with two coats of flat white non-reflective paint.
3. If applicable fire-treatment verification stamps on plywood shall be left unpainted to be readable.

D. Communications room walls shall extend from floor slab to ceiling deck, with no drop ceilings installed.

E. Cable tray or ladder rack should be used to distribute cables between rooms through finished wall penetrations.

F. Cable ladder rack should be used to distribute cables within rooms, complete with cable bend limiters (drop outs).

G. To reduce static, floors should not have carpet, but be sealed concrete to prevent concrete dust from forming.

H. Communications rooms shall have only one lockable entrance door, a minimum of 3'-0" wide and 7'-0" high, that opens towards the outside of the room, and does not open into another room.
1. Doors shall be provided with a lockset for the appropriate technology key with pinned hinges and anti-pry guards.
2. Doors should have no windows or door seals.
3. Communications rooms should have no exterior identifying markings.

I. Mechanical
1. Install monitoring sensors with dedicated environmental controls operating 24 hours a day, 365 days a year in the communications rooms.
2. Provide ventilation in the communications rooms to dissipate heat generated by active devices.
3. Temperature and Humidity requirements:
    a) Maintain communication rooms at an average of 60°F to 70°F, with a relative non-condensing humidity of 30% to 50%.
    b) The temperature range should be maintained within ± 9°

J. Plumbing
1. If "wet" fire suppression is used, install wire cages on sprinkler heads to prevent accidental operation.

2. Do not place sprinkler heads over equipment or cabling. In the event of a leak this will protect the equipment and cabling.
3. Drainage troughs are also recommended for leakage protection.

K. Electrical

1. One manufacturer's product is recommended for each type of installation. The mixing of different manufacturer products for one item is not acceptable.
2. No electrical feeders/branch circuits shall be placed in or run through any communications room except as required to service those rooms.
3. The Contractor shall install a slot (a UL-approved fire-rated assembly) to accommodate cable runway entry from corridor and a fire-retardant system (bricks, boards, mechanical, etc). The formed slot shall have no burrs or sharp edges. This opening in the wall will be used to pass data and voice cabling from the corridor cable tray into the communications room.
4. The Contractor shall provide uniform illumination of at least 50 foot-candles (fc) 3'-0" AFF for communications rooms located a minimum of 8'-6" AFF.
   a) Light fixtures in communications rooms are to be positioned for maximum lighting. Do not install over cable tray, ladder rack, or 1'-7" (19") standing racks.
   b) Provide enough power receptacles to support equipment and service. Coordinate power requirements of active equipment with electrical designer.

L. Relay Racks

1. 1'-7" (19") X 7'-0" relay racks are to be used for mounting and termination of inter-building and intra-building fiber optic/ copper cables and components.
   a) The racks shall have adequate horizontal and vertical cable management for the 8P8C patch panels and switches.
   b) Racks with active electronics shall have rack mounted power strips.

1.4 SUBMITTALS

A. Refer to section 270000

1.5 QUALITY ASSURANCE

A. Refer to section 270000

B. Product Standards

1. Equipment and materials shall be standard products of a manufacturer regularly engaged in the manufacture of telecommunications cabling products and shall be the manufacturer's latest standard design in satisfactory use for at least one year prior to bid opening.
2. Items of the same classification shall be identical. This requirement includes equipment, modules, assemblies, parts, and components.

1.6 DELIVERY, STORAGE, AND HANDLING

A. Refer to section 270000

B. Coordinate layout and installation of equipment with owner's communications and LAN equipment and service suppliers. Coordinate service entrance arrangement with local exchange carrier.

1.7 PROJECT/SITE CONDITIONS

A. Refer to section 270000

1.8 WARRANTY

A. Refer to section 270000

B. At the start of the project, contractor shall register the project with the manufacturer to help insure and facilitate manufacturer's warranty process.

PART 2 - PRODUCTS

2.1 ACCEPTABLE MANUFACTURERS

A. 1'-7" (19") x 7" Floor-Mounted 4-post Equipment Racks (MDF)

1. Chatsworth (CPI #55053-703)
2. Owner approved alternate

B. Wall-mounted Equipment Cabinet (IDF)

1. Chatsworth CUBE-iT 26U black with tempered glass door (CPI #11900-748)
2. Owner approved alternate

C. Horizontal Runway and Support Components (ladder tray in MDF/IDF)

1. Chatsworth (CPI #50120-703)
2. Owner approved alternate

D. Horizontal Rack-Mount Cable Management

1. Chatsworth (2RU #30130-719)
2. Owner approved alternate

E. Vertical Rack-Mount Cable Management

1. Chatsworth (CPI CCS, #30162-703; 7'-0"H x 6"W, #30163-703; 7'-0"H x 10"W)
2. Owner approved alternate

F. Labeling

1. Refer to section 270000

G. Firestopping

1. Refer to section 270000

2.2 ACCESSORIES

A. Rack-mounted Uninterruptible Power Supply (UPS)

1. Owner furnished owner installed.

B. Rack-mounted Power Strips

1. Owner furnished owner installed.

PART 3 - EXECUTION

3.1 EXAMINATION

A. Refer to Section 270000

3.2 PREPARATION

A. Refer to section 270000

B. Meet jointly with telecommunications and LAN equipment suppliers, local exchange carrier representatives, and Owner to exchange information and agree on details of equipment arrangements and installation interfaces.

C. Adjust arrangements and locations of equipment with distribution frames, cross-connects, and patch panels of cabling systems of other communications, electronic safety and security, and related systems that share space in the equipment room.

D. Coordinate location of power raceways and receptacles with locations of communications equipment requiring electrical power to operate.

3.3 INSTALLATION

A. Refer to section 270000

3.4 FIELD QUALITY CONTROL

A. Refer to section 270000

3.5 CLEANING

A. Refer to section 270000

3.6 ACCEPTANCE

A. Refer to section 270000

END OF SECTION 271100

SECTION 27 15 00

COMMUNICATIONS HORIZONTAL CABLING

PART 1 - GENERAL

1.1 SUMMARY

A. This section of the horizontal cabling portion of a structured cabling system includes:

1. UTP Copper cabling
2. Termination and patch cables

B. Provide all horizontal cabling, terminating hardware, adapters, and cross-connecting hardware necessary to interconnect all system equipment including equipment located in communications rooms.

C. Related Sections

1. Section 270000 Communications
2. Section 270526 Grounding and Bonding for Communications Systems
3. Section 270528 Pathways for Communications
4. Section 271100 Communications Equipment Room Fittings

1.2 REFERENCES

A. The publications listed below form a part of this specification. The publications are referred to in the text by basic designation only.

B. Specific reference in specifications to codes, rules, regulations, standards, manufacturer's instructions, or requirements of regulatory agencies shall mean the latest printed edition of each in effect at the date of contract unless the document is shown dated.

C. Conflicts

1. Refer to section 270000

D. Codes and Standards

1. Refer to section 270000

1.3 SUBMITTALS

A. Refer to sections 270000 and 271300

1.4 QUALITY ASSURANCE

A. Refer to section 270000

1.5 DELIVERY, STORAGE, AND HANDLING

A. Refer to sections 270000 and 271300

B. Storage temperature range: -40°F to 149°F (-40°C to 65°C)

1.6 PROJECT/SITE CONDITIONS

A. Refer to section 270000

1.7 WARRANTY

A. Refer to section 270000

1.8 MAINTENANCE AND SUPPORT

A. Refer to section 271300

PART 2 - PRODUCTS

2.1 ACCEPTABLE MANUFACTURERS

A. Labeling

1. Refer to section 270000

B. Firestopping

1. Refer to section 270000

2.2 ACCEPTABLE COPPER MANUFACTURERS

A. UTP Plenum Rated Cable Cat6 (blue)

1. Berk-tek Lanmark 6
2. Owner approved alternate

B. Data/Voice Outlet Components Cat6

1. Panduit
2. Owner approved alternate

C. Patch Panels (48 port)

1. Panduit
2. Owner approved alternate

D. Copper Patch Cords Cat6 Pre-assembled

1. Panduit
2. Owner approved alternate

E. Faceplate for wall-mount telephones

1. Panduit KWP6
2. Owner approved alternate

2.3 ACCESSORIES

A. Mount one laminated full-size hard copy in color of an as-built floor plan designating workstation locations, pathways, and communications room locations. Confirm hard copy size with Owner.

B. Provide clear plastic lamination serving each communication room.

C. Install the laminated drawings within a protective Plexiglas encasement on the wall of the servicing communications rooms. To ease accessibility the Plexiglas encasement shall be in either flip-down format or file folder format.

2.4 HORIZONTAL COPPER CABLING

A. Recognized cabling for providing the signal medium from the work area to the communications room shall include the following:

1. Category 6 UTP cable

B. Category 6 UTP Cable Requirements

1. 23/24 AWG solid bare copper
2. Cable jacket shall comply with NEC Article 800 for use as a plenum cable and shall be UL and c (UL) Listed Type CMP (communications multipurpose plenum)
3. Cable shall terminate on an eight-pin modular jack at each outlet. All horizontal cabling shall meet or exceed the ANSI/TIA-568-C.2 Commercial Building Telecommunications Cabling Standard, Part 2: Balanced Twisted Pair Cabling Components
4. Cables shall be marked as UL verified with a minimum of Category 6 rating
5. The cable shall support Voice, Analog Base band Video/Audio, Fax, Modem, Switched-56, T-1, ISDN, RS-232, RS-422, RS-485, 10BASE-T Ethernet, Token

Ring, 100Mbps TP-PMD, 100BASE-T Ethernet, 155 Mbps ATM, AES/EBU Digital Audio, 270 Mbps Digital Video, 622 Mbps 64-CAP ATM and emerging high-bandwidth applications, including 1 Gbps Ethernet, gigabit ATM, as well as all 77 channels (550 Mhz) of analog broadband video

6. The maximum horizontal cable tested length for Category 6 copper cable from the termination of the cable in the communications room to the outlet is 295'-0". It's contractor's responsibility to reroute as necessary to bring all cable runs within distance limit without additional cost to the project. Plan ahead and get approval or exception from Owner before pulling the cables that would ne over the distance limit.
7. Cable shall meet or exceed the following electrical characteristics:
8. Cable shall be specified to 250 MHz and shall meet the manufacturer's guaranteed electrical performance and physical specifications.

2.5 TERMINATION HARDWARE

A. Patch panels

1. Patch panels shall be rated to match installed cable plant
2. The wiring block shall accommodate #23 AWG cable conductors.
3. All modular cross connect panels shall be UL-listed.

B. Work Area Outlet Cat6

1. Universal eight-position jack pin/pair assignments
2. Jack Color:

a) Data: Blue (or approved alternate).

C. Work Area Outlet Faceplates:

1. White or ivory to match electrical outlets.

2.6 PATCH CABLES

A. Verify exact quantities and lengths with Owner prior to purchase

B. Patch Cable requirements:

1. Category 6, stranded UTP cable
2. Standard modular non-keyed, 8-position 8-conductor plug
3. 94V-0 rated
4. UL listed
5. Meets FCC Part 68

C. Provide 3'-0", 5'-0", 7'-0", and 10'-0" Patch Cords at the communications room for each installed port.

1. Coordinate with Owner on the active equipment layout prior to purchase to ensure correct sizing of patch cords from patch panels to switching equipment.
2. When connecting voice ports to a copper riser, provide a one-pair stranded 8P8C connector on one end and 110GS on the other end and shall be of appropriate length for application.

D. Provide a 10'-0" Station Cord for each work area outlet port.

E. Place each size/length patch cord in a separate container, and mark the containers that hold the patch cords with the length of patch cords contained within.

F. All cords shall conform to the requirements of ANSI/TIA-568-C.2 Commercial Building Telecommunications Cabling Standard, Horizontal Cabling Section, and be part of the UL LAN Certification and Follow-up Program.

G. Cords shall be equipped with an eight-pin modular connector on each end, wired straight through and shall be of appropriate length for application.

H. All rated patch cords shall be round, and consist of #23 AWG copper, stranded conductors, tightly twisted into individual pairs.

I. Patch cords shall be made and warranted by the manufacturer of the cabling system installed in this project and shall meet or exceed patch cord specifications as outlined in TIA standards.

2.7 IDENTIFICATION (LABELING) SYSTEM

A. Refer to sections 270000 and 271300.

PART 3 - EXECUTION

3.1 EXAMINATION

A. Refer to Section 270000 and 271300

3.2 PREPARATION

A. Refer to section 270000

B. The Contractor shall check pathways, raceways, and other elements for compliance with space allocations, installation tolerances, debris, hazards to cable installation, and other conditions affecting installation prior to installation.

3.3 INSTALLATION REQUIREMENTS

A. Refer to section 270000

B. All installation shall be done in conformance with ANSI/TIA-568-C standards, BICSI methods, industry standards and manufacturer's installation guidelines.

1. The Contractor shall ensure that the maximum pulling tensions of the specified distribution cables are not exceeded and cable bends maintain the proper radius during the placement of the facilities.
2. Failure to follow the appropriate guidelines shall require the Contractor to provide in a timely fashion the additional material and labor necessary to properly rectify the situation.
3. This shall also apply to any and all damages sustained to the cables by the Contractor during the implementation.

C. Install cable using techniques, practices, and methods that are consistent with specified data cabling and the installed components and that ensure specified performance levels of completed and linked signal paths, end to end.

1. Pull cables in smooth and regular motions using methods that prevent cable kinking.
2. Pull cables simultaneously if more than one is being installed in the same raceway/pathway.
3. If necessary, use approved cable pulling lubricant
4. Use fish tape, cable, rope, basket weave wire/cable grips, and other tools that will ensure no damage to the media or raceway.
5. Install open cabling parallel and perpendicular to surfaces or structural members following surface contours where possible.
6. Do not bend cable greater than a bend radius of 0’-1”.

D. Provide a 10’-0” service loop at the communications room and shall provide a 3’-0” service loop above the access ceiling or cable trays unless specified otherwise.

1. All service loops shall be a minimum of 1’-6” (18”) in diameter and be accessible for maintenance.

E. Coordinate loop placement and orientation with the technology consultant.

1. This allows for future changes or expansion without installing new cables.

F. Install cables in continuous “home run” lengths from work station outlet to specified patch panel.

1. No intermediate punch down blocks or splices may be installed or utilized between the communications rooms and the workstation outlet without written Owner permission.

G. All cable must be handled with care during installation so as not to change performance specifications.

1. Factory twists of each individual pair must be maintained up to the connection points at both ends of the cable.
2. There shall never be more than 0’-½” of unsheathed cable at either the wiring closet or the workstation termination locations.

H. All cabling and associated hardware shall be placed so as to make efficient use of available space.

1. All cabling and associated hardware shall be placed so as not to impair equipment's efficient use of their full capacity.

3.4 CABLING METHODS

A. The Contractor shall provide cabling in accessible spaces, cable tray, (surface and/or enclosed raceway), conduits, and/or J-Hook cable support system.

1. Within consoles, racks, cabinets, desks, and counters, in accessible ceilings spaces and in gypsum board partitions where open cable method may be used.
2. Use UL or ETL listed plenum rated cable in all spaces.
3. Provide all necessary installation materials, hardware, tools and equipment to perform insulation displacement type terminations at all data outlets, patch panels, and voice termination materials.

B. Conceal raceway and cabling except in unfinished spaces as is practical.

C. Exposed Cable

1. All station cabling shall be installed inside walls or ceiling spaces whenever possible.
2. Exposed station cable will only be run where indicated on the drawings and will only be allowed when no other options exist.

a) Owner must approve all exceptions.

D. The Contractor shall utilize conduits/cable tray as indicated on the drawings.

E. All cabling placed above drop ceilings must be supported by cable tray, J-hooks, caddy bags or conduit.

1. The Contractor shall permanently affix cable supports to the building structure or substrates and provide attachment hardware and anchors designed for the structure to which attached and are suitably sized to sustain the weight of the cables to be supported.

a) Attaching cable to pipes or other mechanical items is not permitted.
b) Cabling shall not be attached to ceiling grid wires.

2. Multiple cables are to be dressed every 5’-0” to 7’-0”.

a) Maximum cable sag between cable hooks is 3”-6”.

F. The Contractor shall route data and voice cables separately in a neat and orderly fashion.

1. No cable ties or wraps shall be used to secure the cables in the runway outside of the communications rooms. Cable ties shall be rated for the environment.

G. Keep all items protected before and after installation with dust and moisture proof barrier materials/envelopes.

H. If wiring is terminated on patch panels, data, voice jacks prior to painting, carpet installation, and general finish clean up, these jacks shall be placed in a protective envelope to ensure dust, debris, moisture, and other foreign material do not settle onto jacks' contacts.

1. Envelope will be removed on final trim out after other trades have completed their finish work.
2. It shall be the Contractor's responsibility to ensure the integrity of these protective measures throughout the life/installation of the project.

a) Cable bundles brought into the communications rooms shall be routed and dressed in such a manner that prior to termination the cables are not subject to damage and misuse such as installers walking on the bundles that are on the floor.
b) Cable pulling force shall not exceed 25 lbs of pulling tension or cable manufacturer's recommended pulling tensions.
c) Do not leave cables on the floor unprotected or cable bundles hanging from the ceilings. Coil them up in a temporary manner and protect them from damage.

I. Communications room cables shall be combed and dressed in a manner as to prevent twists, "braiding" and crossed cables in the cable bundle from the communication room entrance to the termination point at the rear of the patch panel.

1. Behind the patch panel, the cable bundle shall be attached to the rear cable support bar, and shall drop out each cable in a neat, cascading manner to prevent crossed and/or interwoven cables to each patch panel port termination point.

a) Use Velcro wraps instead of cables ties for all bundling in the communications rooms.
b) Plastic/nylon tie-wraps are not allowed to permanently secure cables inside the communications room.

3.5 CABLING SEPARATION

A. Comply with TIA rules for separating unshielded copper communication and data-processing equipment cables from potential EMI sources, including electrical power lines and equipment.

B. Maintain a minimum spacing of 1'-6" (18") from electrical feeders and/or branch circuit wiring including, but not limited to, light fixtures, sources of heat and EMI sources.

C. Maintain a minimum spacing of 1'-0" from auxiliary systems cabling.

D. Maintain a 1'-0" separation where cables must pass perpendicularly to electrical, plumbing, or other wiring, conduit, or piping systems.

1. Use non-conduit bushings, if necessary to maintain separation, which allow for the addition of a reasonable number of cables in the future.

E. Maintain communications pathways away from electrical apparatus such as motor driven equipment and transformers, minimum separation distance of 10'-0" is recommended.

3.6 CABLING TERMINATION

A. Terminate cables in consistent consecutive order.

B. Terminate cables onto 8P8C modular patch panels without damaging twisted pairs or jacket.

C. Arrange cables on patch panels and voice termination hardware in ascending order of room numbers and outlet numbers within rooms.

D. Provide a 10'-0" service loop for horizontal cables at each rack in communications rooms.

1. Locate loop at ceiling deck or on bottom of cable runway in minimum 1'-6" (18") diameter.

E. Provide a 3' service loop for horizontal cables at work area outlets. Locate service loop above or below data/voice outlet were vertical cable run transitions to horizontal run.

F. Maintain twists in cable pairs to within 0'-½" of termination.

G. Building Systems Cabling (BAS, FA, elevator line, etc)

1. Coordinate exact placement and connectivity requirements with applicable trade prior to installation.
2. Group all building systems cables in one group.
3. Clearly label cable number and function, in the last positions on the horizontal cabling blocks in each communications room.

H. Limit cable-bending radius to 20X the cable diameter during installation, and 15X the cable diameter after installation.

I. Start numbering at the left of the main door to the room and continue in a clockwise direction around the room.

1. The cables within the room will be terminated starting with the cables located to the left of the main door to the room and continue around the room in a clockwise direction.

3.7 TERMINATION HARDWARE

A. Station Hardware

1. Flush mount jacks shall be mounted in a faceplate with back box.
2. Outlets shall not be mounted on temporary, movable, or removable surfaces, doors, or access hatches without prior Owner approval.
3. 8P8C Jack Pin Assignments for work area outlets shall match the T-568B wiring scheme.

B. Patch panels

1. Copper cables shall be terminated in eight position/eight conductor (8P8C) modular patch panels.
2. All Modular jack panels shall match the T-568B wiring scheme.

C. Work Area Outlet

1. 8P8C non-keyed modular outlets for applications up to one Gbps and ANSI/TIA-568-C compliant for the specified transmission requirements

D. Work Area Outlet Faceplates:

1. Furnish and install blank plates in all unused ports.

3.8 SPECIAL CIRCUITS

A. The Contractor shall coordinate with the Owner on the cable termination plan for special circuits, including cables to wireless access point locations, security, elevators, fire alarms, etc.

B. Wireless Access Points

1. Install two (2) cable(s) from dedicated wireless patch panel(s) in communications room to outlets having 8P8C connectors within a BISCUIT box.
2. Enclosures shall be NEMA rated for the environment to which they are exposed.

3. 30’-0” of cable slack shall be coiled and hung on a “J”-hook at the enclosure location.

3.9 IDENTIFICATION AND LABELING

A. Labeling system shall consist of a hand-held portable printer and labels appropriate to the application. Handwritten labels are not acceptable.

B. Labelling scheme shall meet Owner’s IT cabling standard and industry standards and best practices. Submit labelling scheme for approval before work to start.

C. Fiber termination hardware (designation strip) shall have a 0’-¾” x 0’-¼” thermal transfer printable label with a permanent acrylic adhesive

D. All labels shall be permanent and shall not fade, peel, or deteriorate due to environment or time.

E. The Contractor shall provide a copy of the finalized plan in writing to the Owner representative and DBR for review and authorization to proceed.

1. Coordinate with Owner for specifications on labeling of all hardware, cabling, and related equipment prior to any testing.

F. Labeling requirements:

1. Label cable terminations on designation strips
2. Label all cable at each terminating point.
3. Label each port of the work area outlet.
4. Cable identification numbers shall not be duplicated.
5. Label patch panels in the communications rooms to match those on the corresponding voice and data outlets.

a) The font shall be at least 0’-1/8” in height.

6. Where a wireless access point is installed above an acoustical ceiling, label the ceiling grid frame below the access point, displaying the data port number and, if applicable, the access point identification number. Coordinate labeling of grid with Owner and Architect prior to application of labels.
7. Label each distribution rack, block and other terminating equipment unit and field within that unit within 0’-4” from the block or patch panel termination. Keep labels in a neat and orderly lineup.
8. Label each connector and each discrete unit of cable-terminating and connecting hardware within connector fields, in wiring closets and equipment rooms.

a) Where similar jacks and plugs are used for both communication and data-processing equipment, use a different color for jacks and plugs of each service.

9. Post the cable schedule in a prominent location in each wiring closet and equipment room. List incoming and outgoing cables and their designations, origins, and destinations.

G. Location and termination field description

1. Room location
2. Rack-mount or Wall mount
3. Termination field type

a) Specific patch panel ports versus a separate dedicated patch panel

H. Unique identifiers

1. Segregation and position on equipment rack
2. Port color-coding

3. Unique labeling

I. Documentation

1. Provide electronic copy of final comprehensive schedules for project in software and format selected by Owner.

a) All labels shall correspond to as-built drawings and to final test reports.

2. All cable inventory data documentation shall be submitted in format coordinated with and approved by Owner so that data can be incorporated into existing databases.
3. Documentation shall include cable identification number, source and destination, type of cable, length of cable and number of pairs or fibers.
4. Complete cross connect documentation is required.

3.10 FIELD QUALITY CONTROL

A. Refer to section 270000

3.11 POST-INSTALLATION TESTING

A. Contractor shall test each pair or strand of every cable prior to acceptance. (100% PASS)

B. Contractor shall submit acceptance documentation as defined below. No cabling installation is considered complete until test results have been completed, submitted and approved.

C. Standards Compliance and Test Requirements:

1. Cabling shall meet ANSI/TIA-568-C.2 Category 6 Horizontal cabling requirements.

D. Attenuation, NEXT, PSNEXT, Return Loss, ELFEXT, and PSELFEXT data that indicate the worst case result, the frequency at which it occurs, the limit at that point, and the margin.

1. These tests shall be performed in a swept frequency manner from 1 MHz to highest relevant frequency, using a swept frequency interval that is consistent with TIA and ISO requirements.
2. Information shall be provided for all pairs or pair combinations and in both directions when required by the appropriate standards.
3. Length, propagation delay, and delay skew relative to the relevant limit.

a) Length, propagation delay, and delay skew shall be tested relative to the relevant limit.
b) Test shall also include mutual capacitance and characteristic impedance.

1) Any individual test that fails the relevant performance specification shall be marked as a ‘FAIL”.

E. Cable Test Documentation:

1. Cable test documentation shall be submitted in hard copy and electronic formats.

a) If proprietary software is used, disk or CD shall contain any necessary software application required to view test results.
b) Electronic reports shall be accompanied by a Certificate signed by an authorized representative of the Contractor warranting the truth and accuracy of the electronic report.
c) Certificate shall reference traceable circuit numbers that match the electronic record.

2. Each test record shall contain the cable ID as follows:

a) "MEDIA TYPE – SOURCE ROOM – DESTINATION ROOM – STRAND/PAIR #", e.g. MM-MC-HC23-001.

3. Test results saved within the field-test instrument shall be transferred into an accessible database utility that allows for the maintenance, inspection and archiving of the test records.

a) These test records shall be uploaded to the PC unaltered, i.e., "as saved in the field-test instrument".
b) The file format, CSV (comma separated value), does not provide adequate protection of these records and shall not be used.

4. Test reports shall include the following information for each cabling element:

a) Wire map results that indicate that 100% of the cabling has been tested for shorts, opens, miss-wires, splits, polarity reversals, transpositions, presence of AC voltage and end-to-end connectivity.
b) Length, propagation delay, and delay skew relative to the relevant limit. Any individual test that fails the relevant performance specification shall be marked as a FAIL.
c) Cable manufacturer, cable model number/type, and NVP
d) Tester make & model, serial number, hardware version, and software version.
e) Cable ID and project name
f) Auto-test specification used
g) Overall pass/fail indication
h) Date of test

F. Cable Test Equipment

1. Contractor shall supply all of the required test equipment used to conduct acceptance tests.
2. Test equipment used under this contract shall be from manufacturers that have a minimum of 5 years experience in producing field test equipment. Manufacturers shall be ISO 9001 certified.
3. Testing equipment shall be UL-verified to meet Level III accuracy.

a) The cable installers shall have a copy of this reference in their possession and be familiar with the contents.

4. Testing equipment shall be within the calibration period recommended by the manufacturer.
5. Testing equipment shall have the latest software and firmware installed.
6. Testing equipment of a given type shall be from the same manufacturer, and have compatible electronic results output.
7. Test adapter cables shall be approved by the manufacturer of the test equipment.

a) Adapter cables from other sources are not acceptable.
b) Adapter cables must be replaced after 1000 tests to ensure accuracy.

8. Test equipment must have a dynamic range of at least 100 dB to minimize measurement uncertainty.
9. Test equipment must be capable of storing full frequency sweep data for all tests and printing color graphical reports for all swept measurements.
10. Test equipment must include S-Band time domain diagnostics for NEXT and return loss (TDNXT and TDRL) for accurate and efficient troubleshooting.

11. Test equipment must be capable of running individual NEXT, return loss, etc measurements in addition to auto tests. Individual tests increase productivity when diagnosing faults.
12. Test equipment must include a library of cable types, sorted by major manufacturer.
13. Test equipment must be able to internally group auto tests and cables in project folders for good records management.

    a) Test equipment must store at least 1000 auto tests in internal memory.

14. Test equipment must include DSP technology for support of advanced measurements.
15. Test equipment must make swept frequency measurements in compliance with TIA standards.
16. The measurement reference plane of the test equipment shall start immediately at the output of the test equipment interface connector.
17. There shall not be a time domain dead zone of any distance that excludes any part of the link from the measurement.
18. Acceptable testers:

    a) Fluke DTX CableAnalyzer
    b) Owner approved equivalent

3.12 CLEANING

A. Refer to section 270000

3.13 ACCEPTANCE

A. Once all work has been completed, test documentation has been submitted and approved, and the Owner is satisfied that all work has been completed in accordance with contract documents, the Owner will notify Contractor in writing of formal acceptance of the system.

B. Contractor's RCDD shall warrant in writing that 100% of the installation meets the requirements specified herein.

C. Acceptance shall be subject to completion of all work, successful post-installation testing which yields 100% PASS rating, and submittal and approval of full documentation as described above. Tests with the "* PASS" (asterisk) will not be acceptable.

1. These circuits must be repaired to meet "PASS".

END OF SECTION 271500

SECTION 27 41 31
CATV SYSTEM

PART 1 – GENERAL

1.1 RELATED DOCUMENTS

A. Drawings and general provisions of the Contract, including General and Supplementary Conditions and Division 01 Specification Sections, apply to this Section.

1.2 SUMMARY

A. This section includes the requirements for provision and installation of the community antenna television (CATV) system components. This shall include directional couplers, feeder cable, drop cable and required accessories for a complete and operable system. System head-end components will be provided by others. Contractor shall coordinate with head-end provider for connection to and testing of the system.

B. Related Sections include the following:
1. 27 05 00 Common Work Results
2. 27 05 26 Communications Grounding and Bonding
3. 27 05 28 Communications Pathways

1.3 SUBMITTALS

A. Shop Drawings:
1. System block diagram.
2. Details of system equipment installed in the communications room racks and on walls, including wiring diagrams.
3. Details of connections to power sources, including power supplies and grounding.
4. Details of interconnection to signal transmission media.

B. Product Data: Submit cut-sheets including name of manufacturer, trade name, and model number of each component. Indicate related specification section number, specification paragraph numbers, and reference standards for each product.

C. Loss Calculations: Submit loss calculations for the entire system including tap values.

D. Record Drawings: Furnish CAD drawings of all installed cabling and equipment.

E. Contractor shall submit a testing plan that meets the requirements of paragraph 3.3 in this Section.

F. Contractor shall submit test results consisting of tabulated measurements of all ports on the active and passive system components as well as any final gain settings and attenuator values used to optimize the system.

G. Contractor shall submit Operation and Maintenance Manuals for the equipment provided under this project. The manuals shall be inclusive all documentation and software supplied with each product. Include the training syllabus and training materials to be provided for the training required under paragraph 3.4. Operations manuals shall be submitted for approval a minimum of 10 days before scheduled training.

1.4 REFERENCES

A. The publications listed within this specification form a part of this specification to the extent referenced. The publications are referred to in the text by basic designation only.

B. Specific reference in specifications to codes, rules, regulations, standards, manufacturer's instructions, or requirements of regulatory agencies shall mean the latest printed edition of each in effect at the date of contract unless the document is shown dated.

C. Conflicts
   1. Between referenced requirements: Comply with the one establishing the more stringent requirements.
   2. Between referenced requirements and contract documents: Comply with the one establishing the more stringent requirements.

D. References
   1. Code of Federal Regulations (CFR) – 10CFR47, Part 76.605, “Signal quality for CATV.” Federal Communications Commission (FCC), Washington, DC
   2. Society for Cable Television Engineers (SCTE), Publications and industry standards.
   3. National Cable Television Institute (NCTA) Practices for Measurements on Cable Television Systems
   4. Underwriters Laboratories (UL) Cable Certification and Follow Up Program
   5. National Electric Code (NEC), section 820
   6. UL Testing Bulletin

1.5 QUALITY ASSURANCE

A. All components installed for this distribution system shall be industrial grade equipment designed for commercial CATV systems.

B. Contractor Qualifications
   1. The Contractor must adhere to the engineering, installation and testing procedures provided by the manufacturer and utilize the authorized manufacturer components and distribution channels in provisioning this Project.
   2. Must provide three references for projects of equivalent scope, type and complexity of work completed within the last three years. The Contractor shall use only qualified installation personnel experienced in similar type installations.
   3. The Contractor shall possess the required license classification, performance history, and experience in installation of CATV systems. The Contractor shall submit written proof that the following experience requirements are being met.
   4. Hardware Manufacturer’s Experience: All components shall be produced by manufacturers who have been regularly engaged in the production of CATV systems and components of the types to be installed for at least five years.

1.6 CONTRACTOR DUTIES

A. Perform all work; provide all products, systems integration, engineering, design work, and testing required for the project in order to ensure fully operative systems and proper installation of equipment.

B. Provide system documentation and submittals.

C. Provide warranty and maintenance support.

D. Provide calculations and analysis to support design and engineering decisions as specified in submittals.

E. Provide and pay for all labor, materials, and equipment. Pay required sales, gross receipts, and other taxes.

F. Secure and pay for plan check fees, permits, fees, and licenses necessary for execution of work as applicable for the project.

G. Provide required notices.

H. Comply with codes, ordinances, regulations, and other legal requirements of public authorities that bear on performance of work.

I. The Contractor shall perform pre-delivery testing, site testing, and adjustment of the completed CATV system. The Contractor shall provide all personnel, equipment, instrumentation, and supplies necessary to perform all testing.

J. The Contractor shall calibrate and test all equipment, verify CATV system operation, place the integrated system in service, and test the integrated system. The Contractor shall deliver a report describing results of functional tests, diagnostics, and calibrations,

including written certification to the Project Manager that the installed complete system has been calibrated, tested, and is ready to begin performance verification testing. The report shall also include a copy of the approved performance verification test procedure.

K. All equipment shall be installed in a professional manner by a certified technician, in accordance with good construction and engineering practices. Test results and as-builts drawings shall be delivered to the Owner or upon completion of the project.

1.7 MAINTENANCE AND SUPPORT

A. Base: The Contractor shall provide maintenance and support of all hardware and software associated with this system for the first year. The maintenance services to be provided by the Contractor shall include preventive, routine, and emergency maintenance services as defined below under optional maintenance and support.

B. Optional: The Contractor shall provide option pricing for maintenance and support for five years following the warranty period. The option pricing shall be given as a guaranteed maximum annual cost. This service is to include parts, labor, licenses, and all other Contractor costs required to keep the equipment operational. Pricing shall be provided for the following two levels of support:
   1. Twenty-four hour a day, seven day a week telephone support, plus eight hour on-site emergency support
   2. Twenty-four hour a day, seven day a week telephone support, plus two hour on-site emergency support

C. Preventive and Routine Maintenance: During the first year, preventative and routine maintenance services shall be provided in accordance with the provisions of the maintenance manual the Contractor issues for each component. Preventative maintenance services shall include inspection, test, necessary adjustment, lubrication, parts cleaning, and software upgrades. Routine maintenance services shall include scheduled overhauls as recommended by the equipment and software manufacturer.

1.8 WARRANTY

A. The warranty on all cabling and connecting hardware of the distribution system to this specification shall be for a period of not less than five years. The connecting hardware shall have a lifetime extended warranty against defects in material and workmanship. If items supplied as part of this project have longer warranties, Contractor shall supply longer warranty.

B. The warranty on all distribution electronics, including taps and passives of the distribution system to this specification shall be for a period of not less than one year. If items supplied as part of this project have longer warranties, Contractor shall supply longer warranty.

C. The warranty shall cover the replacement or repair of defective product(s) and labor for the replacement or repair of such defective product(s).

PART 2 – PRODUCTS

2.1 MANUFACTURERS

A. Available Manufacturers: Subject to compliance with requirements, manufacturers offering products that may be incorporated in the specification include, but are not limited to, the following:
   1. Arris
   2. Scientific Atlanta
   3. Blonder Tongue
   4. Toner

2.2 EQUIPMENT REQUIREMENTS

A. Power Supply
   1. Wall mountable
   2. 60 V AC @ 3.5 A, max 8 A

B. Power Inserter
   1. Frequency range, 5 MHz to 1 GHz
   2. Shall be capable of passing 15A, 60/90 V AC, 50/60 Hz
   3. Insertion loss shall not be greater than
      a. 0.6 dB @ 5MHz
      b. 1.4 dB @ 1GHz

C. Bi-Directional Couplers
   1. Arris Regal series or submitted and Owner approved equivalent.
   2. Frequency range, 5 MHz to 1 GHz
   3. Output shall have a flat insertion loss of 8.5 dB on high loss leg. Low loss leg shall have an insertion loss not greater than:
      a. 1.7 dB @ 5 MHz
      b. 3.0 dB @ 1GHz

D. 8-Port Taps
   1. Arris Regal series ***RMT 2000*** or submitted and Owner approved equivalent.
   2. Frequency Range, 5MHz to 1GHz

E. Amplifiers
   1. Blonder Tongue BIDA ***5800 series - BIDA 100A-30*** (gain as required per system calculations) or equivalent.
   2. Minimum Frequency Gain: 30 dB
   3. Forward pass band from 5***4 – 862*** MHz
   4. 60 and 90 V AC powering capability
   5. 15 ampere (steady state) and 25 ampere (surge survivability)

F. EQUIPMENT PERFORMANCE REQUIREMENTS
   1. The CATV system shall be capable of delivering CATV channels 2 through 135.
   2. The CATV system shall be two-way compatible with the ability to transmit all frequencies between 5 and 40MHz from the wall plate back to the head-end.
   3. The forward signal level at each wall outlet shall have no greater than a 10dB tilt across the bandwidth of the distribution system, 54 to 862MHz. The signal level shall not fall below 3dBmV and shall not exceed 8dBmV.

2.3 MATERIAL

A. Contractor is responsible for all hardware, connectors, tools, and test equipment of any kind necessary to accommodate the system installation, operation, testing, or maintenance.

B. All connecting hardware installed for this distribution system shall be industrial grade components designed for commercial CATV systems and designed to be used with the installed cable.
   1. The “F” connectors used for RG-6 or RG-11 drop cable shall be a one-piece connector that must be crimped on the cable with a hexagon style crimper.

C. All equipment associated with the system shall operate from 5 MHz to 1 GHz as a minimum.

D. ***Coaxial drop cable for lengths less than 150 feet shall be*** RG-6 plenum cable***, F6 series*** as manufactured by Comm/Scope, Inc, or submitted and Owner approved equivalent.

E. Coaxial drop cable for lengths greater than 150 feet shall be RG-11 plenum cable, F11 series as manufactured by Comm/Scope, Inc, or submitted and Owner approved equivalent.

F. Non-locking 75-Ohm terminators shall be installed on all unused ports on splitters, directional couplers, and multi-port taps.

G. Coaxial trunk cable shall be ***2312K (P3 500 JCAP)*** plenum cable***, as manufactured by Comm/Scope.*** Contractor is cautioned to exercise care in handling this 1/2 inch cable as it

can be easily damaged. Install with wide-sweeping turns.

PART 3 – EXECUTION

3.1 GENERAL

A. Verify backboards are properly installed.
B. Verify cable pathways are properly installed.
C. Verify main grounding system is properly installed and tested.

3.2 INSTALLATION

A. Install work following drawings, manufacturer's instructions and approved submittal data.
B. The CATV system installation shall meet all applicable national and local codes pertaining to low voltage cable system installations.
C. The Contractor shall adhere to the installation schedule of the General Contractor and should attend all construction meetings scheduled by the General Contractor.
D. The installation will include coordination, testing and problem resolution with the system vendors.
E. The Contractor shall provide all test equipment necessary to properly install, maintain, and troubleshoot the system. Any equipment purchased for this contract shall become the property of the Owner upon completion of the project.

F. All cables shall be labeled in accordance with the Owner's standard numbering scheme and labeling standards.
G. Cable labels shall be placed in the following locations: on jack face plates, on cable inside back boxes, junction boxes, access points, on cable above the terminations in the communications rooms, and every fifty-feet when not in conduit. Conduits shall be labeled "COMMUNICATIONS" every fifty-feet and at the origination and destination.

3.3 FIELD QUALITY CONTROL

A. Manufacturer's Testing
   1. Coaxial Cable testing
      a. Testing of all coaxial cabling shall be performed prior to system startup. One hundred percent of the distribution and customer drop cable shall be tested for length, opens, shorts, and presence of AC voltage. The Contractor, at no charge to the Owner, shall correct all discrepancies. Complete end-to-end test results must be submitted to the Owner.
      b. At a minimum, the Owner or the Owner's Designated Representative shall randomly perform unannounced, on-site reviews during the installation. In addition, the Owner or the Owner's Designated Representative shall perform a final inspection and a complete review of the test results before the installation is accepted.
B. The Owner or the Owner's Designated Representative shall be given the opportunity to test the completed system for proper installation and operation. Any cable or component found improperly installed, damaged, with loose connector, or with Radio Frequency Interference (RFI) leakage shall be repaired, and if necessary, replaced with new cable, connectors, and components at no cost to the Owner.
C. System Testing
   1. Upon completion of the installation, the Contractor shall test the signal strength using a signal strength meter at 55 MHz (channel 2) and 550 MHZ (channel 78) at the input and output of each system component and at the outputs of all taps. These test results shall be submitted to the Owner in Microsoft Excel 97 format, or ASCII, comma delimited files with fields in identical order. It shall also be documented on the as-built CATV system drawing.

2. The television distribution system as a whole shall be tested in accordance with National Cable Television Association (NCTA) Recommended Procedures and Practices for Measurements on Cable Television Systems, 2nd Edition (or the most current edition), by the installer to provide the following:

a. +3 dBmV minimum output at all taps for each channel.

b. +12 dBmV maximum output at all taps for each channel.

a. 20 dB minimum isolation between ports.
b. Lines terminated in characteristic impedance.
c. F-Type self-terminating connectors at all unused ports.
d. A picture free of interference, ghosts and smear, with clear audio, on all channels and at all taps.
e. An overall signal-to-noise ratio of 40 dB for a 6 Mhz band-width.
f. Variations in ambient temperatures of -20 degrees F to +140 degrees F (except for converters) shall not cause more than +/- 1.0 dB change in outlet voltage.
g. Amplifiers and system must be capable of handling both forward and reverse path.
h. Conduct and document a Cumulative Leakage Index (CLI) check of the completed system once it is connected to the local TV signal. A copy of this report will be submitted to the Owner. The installer will repair all RF leaks.
i. If the signal strength at the input and output of the system components is outside of the designed specifications, the Contractor shall make the necessary corrections to the system.

3.4 TRAINING

A. The manufacturer's authorized and factory trained personnel must provide up to eight hours of training at the Owner's designated site location.

B. The training may be waived, deleted or reduced in the number of hours only with Owner approval.

C. The training must include at a minimum:
1. Preventive maintenance service techniques and schedules.
2. Overall system concepts, capabilities and functions.
3. Explanation of all control functions.
4. Methods and means of troubleshooting and replacement of all distribution and drop wiring and devices.

D. Manuals, drawings and technical documentation must be used in training and shall be left with the Owner, or its designated representative at the completion of training for the Owner’s use in the future.

E. The use of proprietary equipment does not justify failure to provide technical documentation, such as programming information, electronic schematic drawings and technical description, as part of training and documentation.

F. Specialized equipment necessary to perform preventative maintenance and service, as used in the manufacture’s training program shall be provided by Contractor as a cost add-option to the owner.

END OF SECTION

SECTION 28 00 00

ELECTRONIC SECURITY

PART 1 - GENERAL

1.1 PROJECT SUMMARY/OVERVIEW

A. This document covers the general requirements for work to be performed to provide electronic security and surveillance.

B. The contents of this document, along with related drawings and other documentary material, are critical to the security of this project and Owner and shall remain secure and confidential.

1. Confidential information shall not be deliberately or inadvertently disclosed to anyone other than the Contractor's personnel and subcontractors who require disclosure to perform their portion of the work.
2. This confidential information shall be tracked to ensure that copies are accounted for and properly destroyed when no longer needed to perform the work.

C. The security systems shall consist of the following integrated subsystems as specified herein:

1. Electronic Access Control and Intrusion Detection
2. Video Surveillance
3. Emergency Intercommunications and Duress
4. Wire and Cable

D. Provide complete turnkey systems with the exception of those items noted within this specification as being provided by others.

E. Related Sections include:

1. Section 087100 Door Hardware
2. Section 260000 Electrical (including related sub-sections)
3. Section 270000 Communications (including related sub-sections)
4. Section 281000 Electronic Access Control and Intrusion Detection
5. Section 282300 Video Surveillance
6. Section 283100 Fire Alarm and Smoke Detection

1.2 GENERAL REQUIREMENTS

A. Upon completion of commissioning testing and Owner acceptance, DBR bears no liability or responsibility for the continued proper operation of the installed systems.

B. The Items described herein shall not be modified or substituted without consent of DBR and/or the Owner.

C. Electronic security systems integrator (security subcontractor) manager/supervisor shall attend meetings arranged by the Contractor, Architect, Owner or other parties affected by the work of this Section 280000.

D. If the manufacturer of security devices or connecting hardware has supplied post manufacture performance data, copies of such are to be kept for inclusion in the documentation and made available to the Owner upon request.

E. All materials are to be new unused and of the latest series of model number, unless otherwise indicated by the Owner or security system designer.

F. All security integrator personnel must be manufacturer certified and capable of an installation that falls under the manufacturer's guidelines necessary to obtain a manufacturer warranty.

1. The integrator shall provide all components/materials essential for a complete and functional security access and surveillance system.

G. Security integrator shall issue a two (2) year warranty on installation and workmanship.

H. These Specifications and Drawings are intended for bidding purposes only, No part shall be copied or used for any purpose other than bidding on this project.

1. This package shall be contractual upon bid award.

I. Drawings and Specifications are to be used in conjunction with one another and to supplement one another.

1. In general Specifications determine the nature and quality of the materials and tests, and drawings establish the quantities, details and give characteristics of performance that should be adhered to in the installation of the security system components.
2. If there is an apparent conflict between the drawings and specifications, or within the specifications themselves, the items with greater quantity or quality shall be estimated and installed.
3. Clarification with the Owner/Designer about these items shall be made prior to purchase and installation.
4. Questions regarding the Specification or system requirements should be directed in writing to DBR or the Owner.

J. Security integrator shall adhere to Division 1 general requirements and written security Specifications and Drawings within this construction package and shall be responsible for complying with all local, state and federal laws or regulations applicable to the work being performed, even though said law, rule or regulation is not identified herein.

K. Security integrator shall arrange and pay for any inspections required by the public agencies having jurisdiction in the area.

L. The security contractor shall procure and maintain for the duration of this agreement, insurance against claims for injuries to persons or damages to property which may arise from, or conjunction with, the performance of the work hereunder by the security integrator, his agents, representatives, or employees.

1. The security integrator shall pay the cost of such insurance.

M. The security integrator will respect and protect the privacy and confidentiality of the Owner, his employees, processes, products, and intellectual property to the extent necessary, consistent with the legal responsibilities of the State of Texas and the Owner.

N. If required the security integrator shall sign a non-disclosure agreement and abide by its requirements to keep confidential all information concerning bid documents and this Project.

O. Furnish submittals and manuals in accordance with Division 1.

P. Furnish a detailed material list complete with suppliers (distributors) list of components and distributors name, address, and phone number.

Q. Refer to Specifications issued by Architect, Division 1, for Project and cost payments.

1.3 REFERENCES

A. The publications listed below form a part of this Specification. The publications are referred to in the text by basic designation only.

B. Specific reference in Specifications to codes, rules, regulations, standards, manufacturer's instructions, or requirements of regulatory agencies shall mean the latest printed edition of each in effect at the date of contract unless the document is shown dated.

C. For conflicts between referenced requirements and contract documents comply with the one that is more stringent.

1. Federal, State, and Local codes, regulations and ordinances
2. NFPA 101: Life Safety Code
3. NFPA 72: National Fire Alarm Code
4. NFPA 730: Guide for Premises Security
5. NFPA 731: Standard for the Installation of Electronic Premises Security
6. National Electric Code (NEC), latest edition
7. Building Codes (UBC) (IBC), latest editions
8. Occupational Health and Safety Act (OSHA)
9. Americans with Disabilities Act (ADA)
10. Local Governing Authorities Having Jurisdiction
11. Underwriters Laboratory (UL) Applicable Standards for Safety and Security
12. Institute of Electrical and Electronics Engineers (IEEE) Applicable Standards
13. Telecommunications Industry Association (TIA) Applicable Standards
14. Client standards for Security Systems

D. Related Documents

1. Security Drawings
2. General provisions of contract
3. Uniform general conditions
4. Supplementary general conditions
5. Architectural plans & specifications
6. Requirements of Division 1
7. Electrical / Mechanical / Telecommunications specifications and plans.

1.4 DESCRIPTION OF SYSTEM WORK

A. Furnish and install all materials, tools, equipment, and services for all electronic security/surveillance devices to provide functioning systems in accordance with performance requirements specified and any modifications resulting from reviewed shop and field coordinated drawings.

a) Access Control System
b) This system replaces the typical mechanical key controlled door lock with a door locking system that uses an access card as the access credential.
c) The system includes an electric door-locking mechanisms, card reader located adjacent the door, door status sensor, door prop alarm and a request to exit device.
d) Typical system configuration is card or schedule controlled entry with free exiting.

2. Intrusion Detection System

a) This system monitors areas for unauthorized entrance or intruder.
b) This system can consist of motion sensors, door status sensors, glass break sensors and one or more control keypads.
c) The keypad is used to arm/disarm system by entering a numeric code on the keypad.

3. Video Surveillance System

a) This system is used to provide video surveillance through the use of cameras of security sensitive areas and target items.
b) The system shall allow for the viewing and recording of images.

4. Emergency Intercommunications and Duress Systems

a) Duress Buttons

1) These buttons, also known as panic buttons, are installed in locations where potential personal safety or security threats exist.

2) Depressing the button sends a silent priority alarm signal to assigned monitor with location and specific alarm information
3) The panic button is usually located in the knee space underneath a desk or service counter.

B. RACKS AND ENCLOSURES

1. Wall mounted enclosures, data gathering panels, and power supply panels shall be installed as per manufacturer's requirements.

a) Coordinate pathways and power with Electrical and Telecommunications Contractors
b) Furnish all labor, materials, tools, equipment, and services for all control consoles, equipment racks, cabinets, and enclosures not provided by others in accordance with contract documents.
c) Completely coordinate with work of other trades to avoid duplication in purchasing.
d) Although such work is not specifically indicated, furnish and install all supplementary or miscellaneous items, and devices incidental to or necessary for a sound, secure and complete installation.

2. The installation of the relay racks/cabinets for Electronic Surveillance shall be by the Telecommunications Contractor.

a) Coordinate locations with G.C.

3. The designated security space will provide an area reserved for rack and wall mounted security equipment.

a) The rack area allows for vertical relay rack(s).
b) Backboard wall area of 8'-0" X 8'-0" shall be reserved for wall-mounted components.
c) Cable tray/ ladder shall be by the telecommunications contractor and is provided to facilitate cable access into both wall and rack mounted equipment.

C. Provide all supplementary or miscellaneous items and devices incidental to or necessary for a sound and complete installation.

D. Drawings are representative and show general arrangement of systems and equipment, except when dimensioned or detailed.

1. For exact locations refer to dimensioned architectural drawings.

a) Field measurements take precedence over dimensioned drawings.
b) Field verify locations and arrangement of all systems and equipment.
c) Coordinate all work with other trades and Contractor.

E. Circuit Supervision

1. Supervise all signal and data transmission lines, links with other systems, and sensors.

a) Indicate circuit and detection device faults with both protected zone and trouble signals.
b) Initiate an alarm in response to opening, closing, or shorting of a signal or data transmission line.

F. Electronics systems work as specified in this Section and Sections 281000, 282300, 282600 shall include:

1. A project kick-off/pre-submittal meeting with the Architect, Designer, and Contractor to review security design package.

a) Additional participants shall include:

1) Division 8 subcontractors
2) Division 26 subcontractors

2. Preparation of pre-installation submittals, including point-to-point wiring information for security equipment to interface to work by others prior to start of any installation work. Include lock permit requests in submittals for review.
3. Furnishing and installation of all security devices, components and accessories.
4. The furnishing and coordination on installation of special back boxes for security equipment and field devices as required.
5. Furnishing, installation and termination of all copper wiring and cabling including any special purpose wire and cable for electronic security systems.

   a) Coordinate all network and fiber optic cable interface provided by telecommunications subcontractor.

6. Coordinate raceway and power distribution systems provided by Division 26.
7. Provide and install 12/24 VAC/DC input power to all field devices as required.
8. Coordination with other trades and Owner required to facilitate the installation of the security equipment including:

   a) Division 08 (doors)
   b) Division 26 (power, raceways, and fire alarms)
   c) Division 27 (telecommunications network interface).

9. Wiring and termination of electrified door hardware by security subcontractor shall be concurrent with the installation of these electrified components by the door hardware subcontractor.
10. Programming of all security control equipment and prior coordination with the Owner's security and telecommunications personnel.
11. Preparation of "As-Built" documentation.
12. Warranty service for completed work.

1.5 SUBMITTALS

A. Refer to Requirements of Division 1.

B. Pre-Installation Submittal Requirements

1. Submittals for electronic security shall be complete and submitted at the same time.

   a) No partial submittals will be accepted for review.
   b) Allow 2 weeks for consultant review of submittals.

2. General Requirements

   a) A functional description of each system.
   b) All cable and wiring types for each device type used.
   c) Certification that lock wiring and access control systems requirements have been coordinated with electrified door hardware, fire alarm systems, automatic door controls, and overhead door controls specified in other sections and other packages.
   d) Power supply points listing with devices and maximum loads to prevent overloading.
   e) Battery backup calculations to show load and back-up times for UPS and power supplies with batteries.
   f) Equipment schedules listing all system components, manufacturer, model number and quantities of each.
   g) Qualifications and proof of work history (with references).

3. Product Data Cut-sheets

   a) Complete manufacturer's technical data including manufacturer warranty information, descriptive literature, illustrations, and installation

instructions for all components included within this project indicating compliance with applicable referenced standards, size, dimensions, model number, electrical characteristics, support requirements, connection requirements and all applicable information verifying that submitted components comply with Contract Documents.

4. Shop Drawings
   a) Floor plans necessary to identify specific device locations, cable routes and quantities, cable types, riser locations, and references to installation details and diagrams.
   b) Riser diagram showing routes between floors or other areas that are not easily identified on the floor plans.
   c) Security One-line diagrams showing all input and output points of the system.
      1) The Contractor shall make any corrections required by the consultant team, file with him two corrected copies and furnish such other copies as may be needed.
      2) The consultant's approval of such drawings or schedules shall not relieve the Contractor from responsibility for deviations from drawings or specifications, unless he has in writing called the Architect's attention to such deviations at the time of submission, nor shall it relieve him from responsibility for errors of any sort in shop drawings or schedules.
5. Warranty
   a) The Contractor shall provide the appropriate documentation to comply with the requirements described in the WARRANTY section.
6. Qualifications
   a) The Contractor shall provide the appropriate documentation to comply with the requirements described in the QUALITY ASSURANCE section.

C. As-Built drawings shall be in current AutoCAD format, same version as used by the Architect.
   1. Dimensions and scale of the drawing sheets submitted shall match the size of the drawing used for the contract documents, and shall include the following.
      a) Utilize normally recognized drafting procedures that match AutoCAD standards, Architect, and Designer guidelines and methodology.
      b) The As-Built drawings shall incorporate all changes made to the building identified in, but not limited to, Addenda, contemplated change notices, Site Instructions or deviations resulting from site conditions.
      c) Dimensioned plan and elevation views of all security components.
      d) Cable routing paths of security cables to identified infrastructure pathways.
      e) All rack, cabinet, and enclosure locations and labeling thereof.
      f) One-line diagrams of equipment/device interconnecting cabling of the security systems.
      g) Standard or typical installation details of installations unique to Owner's requirements.
      h) Submit one soft and one hard copy with project deliverables within 30 days of project completion.

D. Security integrator shall provide three (3) paper copies and one (1) electronic copy (PDF format) of a properly indexed O&M Manual at the conclusion of the project, which will include, but not be limited to the following requirements:

1. Ring binder with project title, properly indexed, and contractor's name on cover and spine including:
    a) Sequence of operations, design philosophy, and specific functions
    b) System block diagram
    c) Equipment list including:
        1) A brief description
        2) Model
        3) Total number of each item used in the project.
    d) Camera schedule including:
        1) Number
        2) Location
        3) Camera model/manufacturer
        4) View
        5) Lens
        6) Power source
        7) Multiplexer/input
        8) Settings entered on site
    e) Manufacturers' data sheet and O&M manual for associated equipment.
    f) Maintenance requirements for equipment, inspections and preventative maintenance schedules.
    g) As-built drawings for each floor plan layout and rack and wall elevation layouts. Each drawing shall show:
        1) Cable type and identifier
        2) Actual cable routing pathway
        3) Device number (camera, etc.),
        4) Device input/output number.
    h) Final test data (measured video levels, day & night camera snapshots in JPEG format and other significant operating parameters).
    i) List of system associated mechanical locking keys with key codes and tamper resistant hardware types.

1.6 QUALITY ASSURANCE

A. Electronic security systems integrator (security subcontractor) shall meet the following minimum requirements.
    1. Maintain a valid Type B license from the Texas Private Security Bureau.
    2. Have successfully completed three (3) projects of similar size and complexity that have been in proper operation for a period of one (1) year.
    3. Technicians shall be factory trained and certified in specified systems.
    4. The Project manager and supervising/lead technician shall have been regularly engaged in the installation and testing of the products specified for not less than five (5) years and maintain manufacturer certification.
    5. The security integrator must maintain an operating facility in the local area (50 mile radius) of the Project location to provide service to the Owner for the warranty period.
        a) At the Owners request for service, the security integrator shall dispatch a service technician to the location to affect the required repairs or adjustments.
    6. The contractor shall maintain a spare parts inventory necessary to resolve component failures of the system.

a) Refer to individual specification section for a list of specifically required parts provided to the owner and stored on site. These parts will become the property of the owner.

1) At the end of the warranty period the security integrator shall test the owner's spare parts and repair or replace as needed to bring the parts up to proper operation.

7. A BICSI RCDD shall approve all on-site work as a recognized member of the Contractor's installation team.

a) All installation team members must demonstrate knowledge and compliance with all BICSI, TIA/EIA, UL, and NEC methods, standards and codes.

B. Security integrators desiring approval must comply with Division 1 requirements.

C. Security integrator must be cognizant of site conditions, verify locations of new and existing equipment, and determine exact requirements for connection and interface.

1.7 PRE-INSTALLATION MEETINGS

A. Attend and/or arrange a scheduled pre-installation conference prior to beginning any work of this section.

1. Agenda

a) This venue is to ask and clarify questions in writing related to work to be performed, scheduling, and coordination with the Project manager/Owner representative and consultant.

2. Attendance

a) The security project manager/supervisor shall attend meetings arranged by General Contractor, Owner's representatives, and other parties affected by work of this document.

b) All individuals who will be installers of the electronic security system and equipment in an on-site supervisory capacity, including project managers and lead installers, shall be required to attend the pre-installation conference.

c) Individuals who do not attend the conference will not be permitted to install, or supervise the installation of, any component of the security system.

1) This includes supervisors, project managers, and lead installers of this project.

1.8 POST INSTALLATION MEETINGS

A. At the time of substantial completion the contractor shall call and arrange for a post installation meeting to present and review all submittal documents to include but not be limited to As-Built Drawings, Warranty paperwork, etc.

1. Attendees to be invited shall include:

a) Project manager/Owner representative
b) DBR Inc.
c) General Contractor
d) Other trades that the GC deems appropriate.

2. At this meeting the contractor shall present and explain all documentation, asking for feedback on its completeness.

3. Any discrepancies or deviations noted by and agreed to by participants shall be remedied by the contractor and resubmitted within one week of the meeting.

1.9 DELIVERY, STORAGE AND HANDLING

A. Equipment and components shall be delivered properly protected and undamaged with original containers, packaging, and labels intact.

B. Store, handle, and protect all related materials and equipment in accordance with Manufacturer's recommendations.

C. Provide additional protection during handling as necessary to prevent breaking, scraping, marring, or otherwise damaging products or surrounding areas.

D. Equipment and components shall be protected from the weather, humidity, temperature variations, dirt, dust, or other contaminants.

1. Equipment damaged prior to system acceptance shall be replaced at no cost to the owner.

E. Protect all equipment and components that are to be installed from theft, vandalism, or use by unauthorized persons.

1.10 PROJECT/SITE CONDITIONS

A. Security integrator is responsible for conducting a site survey prior to the commencement of work to determine locations of all existing security devices and verify the proposed locations of the new components to be installed.

B. Security integrator will coordinate all work through the Contractor and schedule work to cause as little interference or interruption of existing services as possible.

C. Security integrator will arrange and pay for all necessary permits, licenses, and inspections.

1. Security integrator shall prepare all information necessary to obtain a permit for Electronic Locking Mechanisms in compliance with the Owner requirements.

D. Verify with Division 26 installer all conduits and special back box requirements in a timely manner.

1.11 WARRANTY

A. See requirements in Division 1 Specifications.

B. The Security Integrator shall warrant all completed work, including all materials and labor, to be free from defects in design, workmanship, and/or materials for a period of two (2) years from final acceptance date.

1. System acceptance is defined as the completion of all functional performance testing and the resolution of all punch list items.

C. Warranty Service

1. In the event that defects in the materials and/or workmanship are identified during the warranty period, the contractor shall provide all labor and materials to correct the deficiency.
2. All service work shall be performed by factory certified technicians.
3. All warranty service shall include the replacement of all parts and or components as required to restore normal system operation.

a) If parts or components need to be repaired, a loaner will be supplied and installed until the part or component can be repaired and reinstalled.

4. Immediately following a warranty service request, the Contractor shall provide written documentation to Owner which details the service work completed, cause of trouble, and any outstanding work required to restore a complete and normal system.

D. Warranty service requests shall be responded to within 4 hours of notification with a qualified service technician on site.

E. All repairs shall be completed within 48 hours upon site arrival.

1. If the failure exceeds 48 hours, the Owner reserves the right to require the contractor provide on-site manufacturer support at no additional cost to Owner.

F. Extended warranties on equipment components offered by the manufacturer shall be passed through to the Owner.

1. Warranty provisions shall be fully transferable only at the direction of the Owner, in the event that ownership of the installed security systems is transferred.

1.12 SYSTEMS STARTUP AND TRAINING

A. After all systems have been tested, accepted and turned on for operation, the Security integrator shall provide "User Training" to Owner personnel.

1. The onsite training shall cover all newly installed electronic security components, devices and systems. The training classes shall total a minimum of twenty (20) hours for up to eight (8) people of the Owner's choosing.
2. Two (2) separate training sessions will be conducted, one for system operators and one for system administrators.
3. The contents of the manuals will include:
   a) Title page with subject, system name, owner's name, and an owner approved confidentiality notice.
   b) Table of contents.
   c) Manual that details system and sub-system operation.
   d) Manuals that details system administration procedures and tasks.
   e) Manuals that fully detail all programming commands.
4. Provide ten (10) Bound hardcopy System Operation training manuals and one electronic copy (PDF format).
5. Provide two (2) Bound hardcopy System Administration training manuals and one electronic copy (PDF format).

PART 2 - PRODUCTS

2.1 MANUFACTURERS

A. Acceptable Manufacturer's are shown in individual specification sections.

B. Equipment manufacturers and model numbers indicated in individual specification sections are identified as minimum equipment requirements.

C. All substitutions shall meet or exceed these minimum requirements and must be approved by the Owner/Architect prior to purchase.

D. All manufacturers' equipment shall be available through a nationally recognized supplier network.

2.2 EQUIPMENT

A. Provide security fasteners on all equipment, device plates, etc. within public areas.

1. Allen head with center pin, hardened steel.
2. Provide four (4) fastener tools to Owner.

B. Equipment installed in exterior applications shall be fitted with fasteners and exposed surfaces of stainless steel or other corrosion resistant material.

C. All materials and equipment used must be new and unused, prime quality products.

D. All equipment or components installed on the exterior of a building where the equipment is subject to adverse weather/elements shall be enclosed in weatherproof enclosures.

2.3 WIRE AND CABLE

A. All wire and cable shall be U.L. approved for its intended application and shall meet or exceed manufacturer's recommendations for the components connected.

B. All conductors and cable shall meet individual security system manufacturer specifications.

1. Provide shielded conductors and cable as required by the manufacturer or as required to provide for interference-free signals.
2. Color coding shall be accomplished by using solidly colored insulation.

a) Grounding conductors, where insulated, shall be colored solid green or identified with green color as required by NEC.

C. Increase conductor sizes on cables as required to be consistent with circuit current ratings, length of wire runs, and manufacturers' recommendations.

1. Alarm device field wiring shall be in accordance with the equipment manufacturer's specifications.
2. Low voltage power circuits shall use conductors as required by the equipment manufacturer's specifications.
3. Plenum rated cable shall be used as required by code.

D. UTP Structured Cabling Systems for IP cameras and intercoms (including pulling, terminating, and testing) by Division 27 Telecommunications contractor.

1. Intra-building data communications circuits shall utilize UTP cable as specified in Telecommunications specifications.

E. Patch Cables

1. Provide pre-manufactured patch cables (cable, connectors, boots, etc.) as required to connect security systems to voice and data communication outlets.
2. Patch cables shall be certified for their specific use to meet or exceed applicable industry specifications.
3. Provide cable lengths as necessary to neatly route cables through cable management systems and other cable organization systems.
4. Provide connectors as required for proper termination.

a) Provide boots for connectors where applicable to prevent snagging.

F. The minimum conductor sizes are for distances as per the manufacturer's specifications from security device to security panel.

1. The contractor shall size the conductor accordingly for longer runs.
2. Minimum Conductor and Cable Types and Sizes.

a) Alarm device field wiring shall be 18/20 AWG stranded copper conductors.
b) Low voltage power circuits will use 18 AWG stranded copper conductors.

1) Increase conductor gauge consistent with circuit current requirements.

PART 3 - EXECUTION

3.1 INSTALLATION

A. All personnel working on this project shall be experienced, highly skilled installers with a minimum of three (3) years work on similar type projects.

B. Changes in location of any work require the written approval of the Architect/Owner prior to initiation.

C. Changes in indicated sizes shall not be made without the written approval of the Owner/Architect.

D. Install all equipment in accordance with manufacturer's recommendations.

E. All systems shall be designed and installed to provide 24 hour a day, 7 days a week operation.

F. Primary pathways

1. All security cabling run from rack/enclosure head-end equipment to security devices shall follow primary telecom routing pathways.
2. Security wire non-UTP cabling shall be kept separated from the data cabling
3. Security wire non-UTP cabling shall be routed in bridle rings secured to the outside of the telecom tray where applicable.

a) Arlington loops or J hooks shall be used where telecom pathways are not present

4. Provide all necessary anchoring devices and supports.

a) Use structural supports suitable for equipment, or as indicated.
b) Check loading and dimensions of equipment with shop drawings.
c) Do not cut or weld to, building structural members.

G. Secondary pathways

1. Arlington loops or J hooks shall be used for secondary pathways
2. Security wire non-UTP cabling shall be kept separated from the data cabling
3. Provide all necessary anchoring devices and supports.

a) Use structural supports suitable for equipment, or as indicated.
b) Check loading and dimensions of equipment with shop drawings.
c) Do not cut or weld to, building structural members.

H. Coordinate extension and connection to commercial, emergency/UPS power circuits provided by Division 26.

1. Make power connections in accordance with Division 26.

I. Shielded and/or screened cables shall be grounded per the hardware manufacturer's instruction.

1. Single point shield grounds shall be grounded at the field panel feeding the device or sub panel and insulated from ground at the termination end of the cable.

J. All installation of security systems shall be complete at least thirty calendar days prior to occupancy.

3.2 RACK AND CABINET INSTALLATION

A. Coordinate rack/cabinet installation with Telecommunications contractor and follow provisions in Section 281000.

B. Rack/cabinet installation by Telecommunications contractor.

C. After racks are installed, install all required components to support rack mounted security equipment.

1. Extend UPS/emergency power to rack mounted equipment as required.

D. Install all conduits, back boxes, wire and cable management as required for interconnection of security equipment, data gathering panels, power supply enclosures, and distribution panels in the Security room.

E. Extend commercial/emergency/UPS power circuits as required to security components as required.

F. Neatly lace and dress all cables in each rack.

1. All wiring and cable shall be properly supported.

2. Utilize suitable cable management devices, no tie-wraps for UTP structured cabling allowed.

3.3 GROUNDING AND BONDING

A. Equipment Cabinets and Racks

1. To provide electrical continuity between rack elements, paint-piercing grounding washers shall be used where rack sections bolt together, on both sides, under the head of the bolt and between the nut and rack.
2. A horizontal busbar shall be installed at the top and back of each rack for floor fed cabinets/racks.
3. A vertical busbar shall be installed to the rear of the right-hand side rail with thread-forming screws to ensure metal-to-metal contact.
4. Each rack shall be provided with a minimum # 6 AWG insulated ground wire.
5. Do not bond racks serially (loop from rack to rack).
6. Each rack bay against a wall shall be bottom/side ground feeds from the wall.
    a) Wall ground feeds/raceways to racks shall not be exposed on the walls.
    b) Exception
        1) Some rack bays will require the ground to be fed from the ceiling raceway. Refer to drawings for details.
7. The Contractor shall provide a ground strap for each equipment rack and bond to the nearest Telecommunications Bonding Backbone (TBB) connection, Furnish all required bonding materials and hardware manufactured for this purpose.
    a) Follow NEC bonding procedures/specifications.
8. All ground raceways within each rack shall be an insulated metallic flex type raceway and shall not interfere with equipment mounting frames or equipment mounting brackets.
9. Each ground feed shall provide proper installation allowances and penetration depths to provide conversion fittings from solid metallic to insulated metallic flex conduit raceways.
10. To bond each rack to ground, burnish clean a one square inch area, drill, tap, apply an adequate amount of antioxidant joint compound mixed for the metal surface types affected, and bolt connectorized conductor to burnished and compounded area.
    a) Ensure proper conductivity.

B. Cable Runway, Cable Raceway and Support System Grounding

1. The Contractor shall provide communications cable tray and cable runway systems with a communications isolated ground from the TBB.
2. All cable tray needs to be electrically continuous per NEC 250.96.
    a) Metal raceways, wire-mesh cable trays, cable armor, cable sheath, enclosures, frames, fittings, and other metal non-current-carrying parts that are to serve as an alternate grounding path, with or without the use of supplementary equipment grounding conductors, shall be effectively bonded where necessary to ensure electrical continuity and the capacity to conduct safely any fault current likely to be imposed on them.
    b) Any nonconductive paint, enamel, or similar coating shall be removed at threads, contact points, and contact surfaces, and be connected by means of fittings designed so as to make good bonding points.
3. The Contractor shall provide and install #6 AWG insulated ground wire to bond one end of each cable tray/runway system to the #2/0 TBB.

4. For electrically non-continuous conduits that contain only grounding conductor, the Contractor shall bond the conduit and conductor together at both ends to ground to nearest TGB with grounding bushings or ground clamps.

3.4 Labeling

A. Provide labeling for all security equipment components using waterproof, self-adhesive computer printed labels.

1. Coordinate with Owner on numbering/labeling scheme.

B. Provide labeling for all security cable/wiring using waterproof, self-adhesive computer printed labels.

1. Coordinate with Owner on numbering/labeling scheme.
2. Label all cables/wiring on both ends.
3. At multi conductor cable terminations label each conductor.
4. At a minimum, each cable/wire label shall designate:

a) Origination Point
b) Alarm point description
c) Opening description (if applicable)

C. Provide a complete cable/wire identification plan/list with project completion submittal.

D. Conduit and junction box exteriors may be identified with unique color paint, but shall not be identified with written words that easily identify the function of the conduit and boxes.

3.5 POWER REQUIREMENTS

A. 120 VAC emergency power dedicated to security will be provided. (By Electrical Contractor)

B. Back-up power for all equipment and devices shall be for at least 4 hours unless otherwise specified.

1. When generator backup power is available, provide a UPS, rated to maintain the load for a minimum of 15 minutes for all 120VAC equipment.

C. Rack-mounted Uninterruptible Power Supply (UPS)

1. Provide a UPS to support 120% of the required load to allow for future load expansion and age related deterioration of the battery performance.
2. The UPS interface port shall have an RS-232 communications port and a 10 Base-T Ethernet for LAN management.

a) Provide the necessary data connection, hardware and software to remotely monitor the UPS
b) Provide user configurable computer operating system shutdown capability

3. The control panel shall have a LED status display for load and battery bar graphs in addition to replace battery and overload indicators.

a) Rack-mounted surge suppression shall be vertically mounted and made for this orientation.

D. All electronic locks shall be 12/24VDC (By Division 08)

E. Connect to AC power and provide UL listed power supplies and transformers to distribute low voltage power to the system components as required.

1. Provide uninterrupted battery backup power for the duration required above.

F. All equipment connected to AC circuits shall be protected from power surges.

1. The devices shall be installed and grounded per manufacturer instructions.
2. Equipment protection shall meet requirements of ANSI C62.41.

3. Fuses shall not be used for surge protection.

G. All non-fiber optic data circuits that serve devices exterior to the buildings will be protected by surge protectors at the device and the termination.

1. The devices shall be installed and grounded per manufacturer instructions.
2. Equipment protection shall meet requirements of ANSI C62.41.
3. Fuses shall not be used for surge protection.

3.6 Testing

A. Ensure that all provisions and requirements of this specification are met.

1. Verify through inspections, demonstrations and tests.

B. Perform required tests to demonstrate workmanship, operation, and performance.

1. Conduct tests with Architect/Owner and if required, inspectors of agencies having jurisdiction present.
2. Arrange test dates in advance and give all parties a minimum of 48 hours notice.

C. Repair or replace equipment or systems found defective or inoperative and re-test until 100% satisfactory results are obtained.

D. Verification inspections will be made of all equipment components and installations for proper functioning of locking hardware and lock controls, mounting/placement of sensors, and cameras, etc. to guarantee requirements of the Contract Documents are complied with.

1. The Owner's quality control representative shall have the opportunity to witness all inspections, or to conduct installation inspections of his own.

3.7 Functional Performance Test

A. The Functional Performance Test (FPT) will be conducted at the end of the project and prior to system acceptance by the Owner.

1. The security integrator will provide all necessary staff and communications needed to fully test all functions of the system.
2. The contractor will submit for approval by the Architect and Owner, a comprehensive test plan that will include testing of every function on every door and security device thirty (30) days prior to the scheduled start of the test.
3. The system will not be considered for acceptance prior to the successful completion of the FPT and completion of punch list items.

B. Pre-Testing

1. Following installation and prior to the FPT, the security integrator shall individually test each component and field device and verify the proper functioning of each component within a particular sub-system.

a) The contractor shall also test each sub-system until all detection zones, alarm assessment components, alarm reporting, surveillance and display components; along with access control functions have been verified.
b) Prior to the FPT all deficiencies must be corrected.
c) After sub-system verification is complete, test the entire system to assure that all elements and subsystems are compatible and function properly as a complete system.

C. Upon completion of the outlined tasks and tests the security integrator shall schedule the FPT with the Architect and Owner.

1. The security contractor must demonstrate that the security system components and sub-systems operate together as a system and meet specification requirements in the "As-Installed" operating environment.

2. On conclusion of the FPT the test report document will be submitted to the architect for approval.
3. The FPT will be observed by the architect's and Owner's representatives.
4. The FPT may be stopped at any time by these representatives if they believe the failure rate is too high or the system is not performing to contract document requirements.
5. The FPT will only resume when all deficiencies have been corrected.
6. Retesting will be required of all failed tests.

3.8 System Operational Test

A. Upon completion of the FPT, conduct a formal test to be known as the System Operational Test (SOT), in which all components and sub-systems of the security system are demonstrated to operate error and failure free together as a system.

1. This test is to be performed over a continuous seventy-two (72) hour period.
2. A formal test plan and test procedures shall be prepared by the security subcontractor and submitted to the Owner/Architect for approval.
3. The Security integrator must demonstrate that the system components and sub-systems meet specification requirements in the "As-Installed" operating environment and operate error and failure free for the duration of the test.
4. If a system failure does occur, the failure must be documented and repaired, after which the seventy-two hour SOT period will restart.

B. In the event that the Owner, Architect, or Contractor are required to witness a retest at a later date because the Security integrator is not properly prepared to conduct the acceptance tests or because the systems being tested have failed such tests, which shall be solely determined by the Architect or Owner witnessing the tests, the cost of witnessing additional tests shall be borne exclusively by the Security integrator.

1. Costs are to be based on time and materials at the established rates of the Architect or Owner.

END OF SECTION 28 00 00

SECTION 28 10 00

ELECTRONIC ACCESS CONTROL AND INTRUSION DETECTION

PART 1 - GENERAL

1.1 SUMMARY/OVERVIEW

A. This section provides specifications for the installation of Electronic Access Control (AC), Intrusion Detection (ID), and related components.

B. Related Sections

1. Section 087100 Door Hardware
2. Section 260000 Electrical (including related sub-sections)
3. Section 270000 Communications (including related sub-sections)
4. Section 280000 Electronic Security
5. Section 282300 Video Surveillance
6. Section 283100 Fire Alarm and Smoke Detection

1.2 REFERENCES

A. See Section 280000 Electronic Security.

1.3 SYSTEM COORDINATION

A. The Security Integrator shall completely coordinate all relevant work of other trades/systems including, but not limited to:

1. Door Hardware
2. Fire Alarm System
3. Electrical Systems(s)
4. Telecommunications System(s)

B. Electric Locking Mechanisms

1. The security integrator and door hardware contractor shall coordinate all door hardware, door and door frame design.
2. The security contractor shall verify all specified door hardware is appropriate for the security application and verify the sequence of operations for each access controlled opening.

C. Fire Alarm and Life Safety

1. The security integrator shall coordinate the access control system design with the life safety consultant to insure compliance with applicable codes and requirements.
2. This includes, but is not limited to:

a) Fire alarm interface
b) Fail safe/fail secure locking mechanisms
c) Delayed egress

1.4 GENERAL SYSTEM DESCRIPTION

A. General Requirements

1. Furnish all labor, materials, tools, equipment, and services for a complete security system as indicated and in accordance with provisions of the contract documents.
2. Although such work is not specifically indicated, furnish and install all supplementary or miscellaneous items, and devices incidental to or necessary for a sound, secure and complete installation.
3. Comply with the provisions of Division 1 for General Requirements.

a) In the event of a conflict between the provisions of this Section and Division 1, the more stringent provisions shall apply.

4. All system devices and components included shall be compatible.

B. The project shall be equipped with new system that is maintained by the police department.

1. All work required within the project for new AC/ID system head end shall be furnished and installed by the project security contractor.

C. The AC/ID system will support the needs of the project in accordance with these specifications.

1. The AC/ID system shall have the capability for future expansion to support the security needs of the completed complex.

D. The AC/ID system shall be interfaced with the Fire Alarm system (by others) as required to comply with all building code requirements.

E. Emergency/UPS power will be utilized to power the AC/ID system's computer workstation (client) at the Security head end equipment location.

F. Emergency/APS power will be utilized to power the AC/ID system's Data Gathering Panels and control components as required throughout the facility.

1.5 ACCESS CONTROL SYSTEM

A. The AC system will consist of card readers, door position switches, and request-to-exit sensors operating in conjunction with associated electric door hardware.

1. Card readers and adjunct devices shall be provided as shown on the drawings.

a) Provide card readers, Data Gathering Panels <DGP>, and alarm input and output devices connected to the security management system via Local Area Network (LAN).
b) The security integrator shall coordinate network and IP address requirements with Owner to identify the Media Access Control (MAC) address (Layer 2) of each provided device, the location to be installed, and the port configuration needed for communication.
c) Furnish all labor, materials, tools, equipment, and services for a complete system as indicated and in accordance with provisions of the contract documents.
d) Although such work is not specifically indicated, furnish and install all supplementary or miscellaneous items, and devices incidental to or necessary for a sound, secure and complete installation.

B. Card readers will work such that upon presentation of a valid AC card, the unique card data shall be transmitted to an associated control panel where the data is compared to an authorized user database and access is approved or rejected accordingly.

1. A valid authorization will activate operation of the electric lock and shunt the door position switch. The alarm shunt will not affect supervision of the detection circuit.
2. Coordinate with owner on card format and other pertinent details.

C. Card readers shall support Magnetic Stripe, 125 KHz proximity, and 13.56 MHz smart card technologies

D. Door position switches at card reader controlled location serve to indicate the open/closed status of the associated door and shall establish the basis for reporting a door-propped or unauthorized entry condition.

1. Security contractor is responsible for coordinating the contact configuration (SPDT) (DPDT) and rating for door position switches, and for connection of switches with the AC.
2. The Division 08 contractor shall be responsible for providing all flush mounted door position switches as indicated on drawings.

E. Electrified door hardware for card reader controlled doors will include electrified locksets, electric exit devices, and electric power transfer as shown on the drawings.

1. All electrified door hardware shall be provided under the work of Division 08 unless otherwise noted.
2. Security subcontractor shall provide all security cables and, low voltage power supplies for operation of electrified door hardware associated with card reader controlled doors.

F. Request-to-exit (REX) devices at designated card reader controlled doors shall cause the associated door position switches to be shunted.

1. The alarm shunt shall not affect the supervision of the alarm detection circuit.
2. Electrified Lockset shall have an integral REX switch.
3. Electrified Exit devices shall have an integral REX switch.
4. Magnetic Locks shall have a Passive InfraRed (PIR) motion sensor REX device.

a) Wire the PIR to the Door REX Input. The configuration on this motion shall be non-resettable and activate for only 2 seconds.
b) A second set of output contacts for the REX motion sensor shall be wired in series with the power to the lock, disconnecting power to the lock when motion is sensed.
c) The PIR REX shall be mounted and the sensor positioned to avoid detection more than three feet from the door and at the door bottom sweep.

1) Deter under door spoofing attacks by pointing the sensor away from the door threshold. Position the sensor to detect motion at the door handle or door push plate.

d) Connect to REX switch in exit device (by Division 8).

1) Coordinate with Division 8 to ensure proper REX switch configuration
2) Wire the REX switch as described for the above motion sensor to disconnect power to the lock and activate the REX input on the DGP.

e) Doors with out exit devices, a UL listed double pole pushbutton exit switch shall be provided as a redundant REX device.

1) It shall be wired as described for the above motion sensor to disconnect power to the lock and activate the REX input on the DGP.
2) Locate within 6’-0” of the door push-plate/handle.

1.6 INTRUSION DETECTION SYSTEM

A. A series of field installed alarm initiating devices shall be connected to the ID system so that status changes of the devices are transmitted to the security management system.

1. Provide Data Gathering Panels <DGP>, alarm devices, and keypads to be connected to the security management system via Local Area Network (LAN).
2. The security integrator shall coordinate network and IP address requirements with Owner to identify the Media Access Control (MAC) address (Layer 2) of each provided device, the location to be installed, and the port configuration needed for communication.

B. Glass Break Detector

1. Contractor will need to provide compatible glass break tester for device being installed.
2. One glass break detector per zone, do not wire in series.

C. Tamper Switches

1. Typically closed tamper switches to monitor the secure status of all DGP's, power supplies, terminal cabinets, power distribution units, and other Security System cabinets and enclosures.
2. Fasten tamper switches within the cabinet to provide no access to the switch and fasteners when the cabinet is closed.
3. Provide independent monitoring of tamper conditions for each cabinet.

a) Include the number of tamper switches in the total alarm input figures.

D. Provide ID keypads conveniently located near areas being protected so as to allow devices to arm and disarm.

1.7 SUBMITTALS

A. Follow provisions of Section 280000 additional requirements.

B. Field Test Reports

1. Upon completion and testing of the installed system, test reports shall be submitted in booklet form and electronic media showing all field tests performed on, and adjustments made to each/any component and all field tests performed to prove compliance with the specified performance criteria.
2. Indicate and interpret test results in written form and verbally to owner/DBR for compliance with performance requirements at a pre-scheduled meeting.

C. Battery calculations to show the expected loads and backup duration for power supplies and UPS devices for all active AC/ID equipment.

D. Security Contractor is responsible to prepare and submit as required to the Authority Having Jurisdiction (AHJ) any and all information to obtain an Electronic Locking Mechanisms permit.

1.8 QUALITY ASSURANCE

A. Follow provisions of Section 280000.

B. Spare Parts:

1. Provide two (2) spare components for every model and configuration of electronic components and devices used on the project as spare parts inventory.

a) The security integrator will turn over the new and unused components and devices to the owner at project closeout.

1.9 DELIVERY, STORAGE AND HANDLING

A. Follow provisions of Section 280000.

1.10 PROJECT/SITE CONDITIONS

A. Follow provisions of Section 280000.

1.11 WARRANTY

A. Follow provisions of Section 280000.

B. All devices and components shall comply with applicable U.L. standards.

PART 2 - PRODUCTS

2.1 ACCEPTABLE SYSTEM MANUFACTURERS

A. AC System Platform Software

1. Open Options DNA Fusion

B. System Platform Server (By Owner)

1. Dell

2. Hewlett Packard
3. IBM
4. Owner Approved Equivalent

C. Workstation (refer to 282300)

2.2 ACCEPTABLE ACCESS CONTROL MANUFACTURERS

A. Access Control Data Gathering Panels <DGP>

1. AC/ID System compatible
2. Owner Approved Equivalent

B. Proximity Card Readers <CR>

1. HID
2. XceedID
3. Owner Approved Equivalent

C. ID credential printer (with card stock and consumables to produce 250 credentials)

1. Fargo
2. Nisca
3. Datacard
4. Magicard
5. Owner Approved Equivalent

D. Door Position Switches <DP> (By Division 08)

1. Concealed Magnetic Door Position Switch

a) Sentrol 1076D
b) Magnasphere MSS-19C/L / MSS-25C/L
c) Detection Systems, Inc
d) Owner Approved Equivalent

E. Electric Locking Mechanism Power Supply

1. Altronix
2. Alarm-Saf
3. LifeSafety Power
4. Owner Approved Equivalent

F. Electric Locking Mechanisms (By Division 08)

1. Sargent
2. Schlage
3. Von Duprin
4. Locknetics
5. Owner Approved Equivalent

G. Electric Power Transfer (By Division 08)

1. Security Door Controls (SDC)
2. Schlage
3. Von Duprin
4. Owner Approved Equivalent

H. Uninterruptible Power Supply <UPS>

1. Eaton UPS

a) 5S series for workstations
b) 9170 for rack mounted equipment

2. APC Smart-UPS Series

a) SMT series for workstations

b) Smart-UPS on-Line series for rack mounted equipment

3. MinuteMan

a) Pro series for workstations
b) Enterprise Plus series for rack mounted equipment

4. Owner Approved Equivalent

I. Wire & Cable

1. Belden
2. Windy City
3. General Cable
4. Owner Approved Equivalent

2.3 ACCEPTABLE INTRUSION DETECTION MANUFACTURERS

A. ID System Platform Software

1. Bosch
2. Honeywell
3. Owner Approved Equivalent

B. Intrusion Detection Data Gathering Panels <DGP>

1. AC/ID System compatible
2. Owner Approved Equivalent

C. Keypads

1. AC/ID System compatible
2. Owner Approved Equivalent

D. Tamper Switches

1. Sentrol 3010
2. Owner Approved Equivalent

E. Dual Technology Motion Detectors

1. Detection Systems
2. GE/Sentrol
3. AC/ID System compatible
4. Owner Approved Equivalent

F. Glass Break Detectors

1. Sentrol
2. C&K Systems IntelliSense
3. AC/ID System compatible
4. Owner Approved Equivalent

PART 3 - EXECUTION

3.1 GENERAL REQUIREMENTS

A. Power Supplies

1. Power supply requirements

a) A switch and on/off indicator within the power supply cabinet.
b) Four hours of sealed gel battery backup to provide continuous operation during power failure.

1) Provide batteries as required to provide specified battery backup time for a fully loaded power supply, regardless of the connected load.

c) A battery charger to maintain the battery.

d) Low battery and power fail contacts to monitor the status of the input power and the battery.

1) Connect each power supply low battery and power fail alarm as a separate alarm input into DGP.

e) Key lockable wall mount metal enclosure with tamper switch.

2. Additional DGP Power Supply Requirements

a) The DGP power supply provides power only to DGP's and shall not provide power for locks or any other low voltage device.

3. Additional Electric Locking Mechanism Power Supply Requirements

a) Fail secure electric locking mechanisms shall remain locked during power failure and fire alarm conditions.

b) Connect fail safe locking devices in accordance with applicable life safety codes to unlock automatically under the following conditions:

1) Loss of power to the power supply
2) Failure of the power supply
3) Fire alarm activation

c) Provide power distribution boards with independently fused output relays and fire alarm control panel interface.

4. Additional Device Power Supply Requirements

a) Provide device power supplies for other security system devices requiring power (e.g. card readers, local alarms, motion sensors, etc.)

b) Provide power distribution boards with independently fused outputs.

B. Video Surveillance System Integration

1. Automatic Video Call-up

a) All alarms shall call up all cameras in the area of alarm to the screen of the ACID alarm operator workstation to allow for operator assessment of the alarm.

2. Pre and Post Alarm Video

a) The operator shall be able to view up to 10 seconds of video before the alarm and 30 seconds after the alarm for all cameras associated with the alarm.

b) This feature is to be integrated with the operator alarm notification to assist in alarm assessment.

c) This feature shall be displayed as an option on the alarm notification screen and will not require operator to make a manual video search.

3. Recording

a) All cameras whose field of view that include images of the area affected by the alarm, shall be recorded when an alarm is detected for use in forensic analysis, including the pre and post alarm video.

4. Duress and Emergency Intercommunications Integration

a) Calls from emergency intercoms/phones with cameras shall provide the above video call-up and the pre and post alarm video capabilities.

C. Tamper Resistant Screws

1. Provide appropriate screw heads for each application (e.g. countersunk heads for recessed cover plate screws, flat head screws for standard junction box covers, etc.).

2. The security integrator shall provide Torx® tamper resistant screws for:

a) Junction boxes located above doors
b) Junction boxes located below ceiling height and/or within reach of hatch ladders
c) Security device cover plates
d) Surface mounted door position switches and armored cable

3.2 ENCLOSURE INSTALLATION

A. Enclosures shall be lockable with a tamper switch and installed in a manner to be accessible with clearance to fully open enclosure door.

B. All security panels shall be wired through a dedicated power supply with battery backup.

1. Power to the data gathering panels is to be hardwired utilizing EMT or rigid conduit in accordance with the Electrical specifications.
2. A circuit from the Fire Alarm panel must be installed to each lock power distribution panel.

C. Enclosures shall be installed on designated wall fields in a neat and compact manner to allow for future growth.

D. Enclosures shall be sized to allow for 20% growth in each panel.

E. All panels and boards shall be installed in enclosure(s) suitable to their environment and have sufficient size and orientation to include all system components.

F. Each panel shall be labeled accordance with Owner standards.

The label for each panel shall be posted on the exterior of the panel door.

a) Each panel shall have a list of devices connected to it located on the inside cover.
b) A detailed device layout drawing will be located on the inside of the panel door in an appropriate sleeve and keeper.

3.3 FURTHER REQUIREMENTS

A. Refer to provisions of Section 280000.

B. Furnish and coordinate installation of all special device back boxes and ACID field devices as shown on the security drawings and as specified in this section.

C. The exact installation locations of all equipment shall be coordinated and verified with the Contractor prior to installation.

1. Subcontractor shall notify the Contractor if any location appears to be unsuitable.

D. Provide low voltage power supplies for electric locking devices and ACID devices and components as shown on the security drawings and specified in this Section.

E. Coordinate with the Telecommunications Subcontractor for data network connections, IP address requirements, and telephone circuits as required.

F. Prepare all systems for user operation.

1. The security system must be complete and ready to operate prior to Owner final acceptance of the system.

G. Coordinate with the Owner for all system programming requirements.

H. Perform database programming as required to support the card reader, alarm point, surveillance system integration, and control panel configuration as required.

END OF SECTION 28 10 00

SECTION 28 23 00

VIDEO SURVEILLANCE

PART 1 - GENERAL

1.1 SUMMARY/OVERVIEW

A. This section provides specifications for the installation of an IP based Video Surveillance System (VS) and related components.

B. Related Sections

1. Section 260000 Electrical (including related sub-sections)
2. Section 270000 Communications (including related sub-sections)
3. Section 280000 Electronic Security
4. Section 281000 Electronic Access Control and Intrusion Detection

1.2 REFERENCES

A. See Section 280000 Electronic Security.

1.3 SYSTEM DESCRIPTION

A. The project will be equipped with a new Video Management System (VMS) as a Stand Alone System.

1. Provide Network Video Recorder (NVR) and Network Attached Storage (NAS) located in relay rack in the MDF of the project site.

a) The new system shall provide for recording, local monitoring, and remote monitoring of IP cameras.

B. The security integrator shall furnish and install the surveillance system, consisting of camera assemblies, NVR, wiring & cabling, and low voltage camera power supplies.

1. All active surveillance equipment and communication devices shall be on emergency/UPS power.

C. Camera assemblies include camera, lens, housing, and mount. Provide and install wiring and low voltage power from the security wall field/rack to the camera locations.

1. Scope of work shall be complete from point of origin (camera) to point of termination (security rack).

D. Provide rack mount 1U monitor/keyboard/track ball drawer with 20” LCD monitor for display and programming, keyboard, track ball, and integrated four-port KVM switch.

1. Provide additional KVM ports as required plus two spare ports if Work includes more than two NVRs.

E. Coordinate all work that must be performed in security head end spaces with the General Contractor, the Electrical Contractor, and the Telecommunications contractor. (if applicable)

F. Camera images shall support H.264 compression formats.

G. The NVR shall not be loaded to exceed 50% of the camera and/or storage capacity to allow room for expansion.

H. Camera lenses for fixed cameras shall be varifocal and sized to provide the owner approved field of view. The lens shall be IR corrected and have megapixel resolution.

I. Surveillance camera audio functions shall not be installed and/or disabled unless specifically requested by Owner.

1.4 SUBMITTALS

A. Follow provisions of Section 280000 for additional requirements.

B. Project Data

1. Provide a description of system operation indicating the purpose and capability of each device/component of the system with a functional diagram indicating all interfaces to other systems.

C. IP: Video Quality test reports shall be provided for all cameras to confirm an optimum high definition video signal.

D. Shop drawings shall reflect all requirements associated with Owner provided or existing equipment and materials that will be used as part of this system.

E. Video Storage calculations to show the system capacity can accommodate the specified video retention.

F. Battery calculations to show the expected loads and backup duration for camera power supplies and UPS devices for all active surveillance equipment.

G. System programming, camera titles, descriptions, camera images and database

1. Camera titles and descriptions prior to system programming
2. Programming/database prior to performance testing
3. Provide a cross reference between specified camera numbers and programmed camera numbers
4. Final programming, camera images and system documentation on electronic media to Owner

H. Product Data

1. Manufacturer's technical data sheets and specifications

1.5 QUALITY ASSURANCE

A. Follow provisions of Section 280000.

B. Spare Parts:

1. Provide two (2) spare components for every model and configuration of electronic components and devices used on the project as spare parts inventory.

a) The security integrator will turn over the new and unused components and devices to the owner at project closeout.

1.6 DELIVERY, STORAGE AND HANDLING

A. See Section 280000.

1.7 PROJECT/SITE CONDITIONS

A. See Section 280000.

1.8 WARRANTY

A. See Section 280000.

PART 2 - PRODUCTS

2.1 CAMERA SPECIFICATIONS

A. All cameras shall be a Dome Camera unless otherwise specified

1. Compatible with the VMS
2. Vandal resistant with polycarbonate dome
3. Wide Dynamic Range Feature: All exterior cameras and interior cameras that have exterior lighting or headlights in their field of view shall have a Wide Dynamic Range feature to improve picture quality in situations with strong backlighting.
4. Multi-stream so that recording and viewing can be at different frame rate and compression.
5. Day-night Color/B&W camera with cut filter
6. Exterior cameras:
    a) Shall be outdoor rated
    b) Include a heater to permit fog-free viewing in low temperatures
    c) Fan to prevent overheating in high temperatures (as required)

B. Interior Fixed Dome Cameras:

1. Shall be IP, PoE IEEE 802.3af
2. Day-night Color/B&W camera with cut filter
3. Smoked lower dome
4. Include an SD card sized to allow for scheduled and event based storage of images
5. Resolution shall be a minimum of 2MP (1080p) at 30 FPS
6. Vari-focal auto-iris fixed lens sized to provide the owner approved field of view
7. Shall have a minimum sensitivity of 0.05 Lux at:
    a) 30 IRE
    b) 75% reflectance
    c) AGC off
    d) 1.2 f-stop
    e) Sense-Up off

C. Interior/Exterior Fixed Wide Angle Lens Cameras:

1. Resolution shall be a minimum of 5.0 MP at 30 FPS
2. Dome Camera is preferred over a Box Camera
3. Include an SD card sized to allow for scheduled and event based storage of images
4. Auto-iris wide angle lens
    a) Shall be Rectilinear Lens to minimize barrel distortion
    b) C/CS mount removable lens
    c) Wide horizontal field of view minimum of 90 degrees
    d) Size lens to provide the owner approved field of view
5. Size camera and lens for facial recognition at a minimum of 60 pixels per foot at the target location
6. Shall have a minimum sensitivity of 0.05 Lux at:
    a) 30 IRE
    b) 75% reflectance

c) AGC off
d) 1.2 f-stop
e) Sense-Up off

D. Exterior Fixed Dome Cameras:

1. Shall be IP, PoE IEEE 802.3af
2. Clear lower dome, unless otherwise specified
3. Include an SD card sized to allow for scheduled and event based storage of images
4. Resolution shall be a minimum of 2MP (1080p) at 30 FPS
5. Vari-focal auto-iris fixed lens sized to provide the owner approved field of view.
6. Shall include remote focus and zoom over the network
7. Shall have a minimum sensitivity of 0.05 Lux at:

a) 30 IRE
b) 75% reflectance
c) AGC off
d) 1.2 f-stop
e) Sense-Up off

E. Exterior Pan Tilt Zoom (PTZ) Dome Cameras

1. Shall be IP
2. Clear lower dome
3. Include an SD card sized to allow for scheduled and event based storage of images
4. Resolution shall be a minimum of 1.3MP (720p) at 30 FPS
5. Auto-iris
6. Zoom - 18 x optical zoom lens and 12 x digital zoom.
7. Operator controlled panning speed shall be at least 300 degrees per second and 360 degree continuous pan rotation.
8. 50 presets minimum
9. Shall have a minimum sensitivity of 0.04 Lux at:

a) 30 IRE
b) 75% reflectance
c) AGC off
d) 1.2 f-stop
e) Sense-Up off

F. License Plate Cameras:

1. Shall be IP, PoE IEEE 802.3af or 802.3at
2. Include pole and wall mount accessories
3. Include infrared (IR) illuminator accessory
4. Include camera housing with sunshield, heater/blower to meet IP66, IP67 and NEMA 4
5. Include an SD card sized to allow for scheduled and event based storage of images
6. Camera resolution shall be a minimum of 2MP (1080p) at 30 FPS
7. Include IR corrected, varifocal CS-mount lens. Provide lens sized to provide the owner approved field of view. Size camera and lens to view a minimum of 60 pixels per foot at the target location
8. Camera shall have remote focus and zoom over the network
9. Camera shall have a minimum sensitivity of 0.22 lux (color) and 0.02 lux (B/W) at 50 IRE
10. Locate camera perpendicular to the viewing surface

2.2 NETWORK VIDEO RECORDER

A. The Network Video Recorder shall be compatible with the existing video management system along with the following minimal requirements:

1. Provide hot swappable storage drives in a RAID 5 array
2. Support dual stream cameras
3. Include a dual Network Interface Card (NIC) that supports:
    a) Full duplex
    b) Fault tolerance
    c) Link aggregation
    d) Load Balancing
    e) Traffic prioritization
    f) Hot swap
4. Native support of H.264 compression that does not require the use of additional software or equipment
5. Provide a 20 inch 1080P service monitor and keyboard at each NVR equipment rack
6. Provide video storage capacity for 30 days using the following minimum criteria
    a) All cameras using H.264 compression
    b) Interior cameras: Use native camera resolution
    c) Exterior cameras: Use native camera resolution
    d) Wide angle lens cameras: Use native camera resolution
    e) Motion triggered recording
        1) Assume that motion will be detected 50% of the day
        2) Motion detection will be configurable by camera and schedule to mitigate nuisance triggers
        3) Record video at 12 FPS when motion is detected
        4) Record video at 1 FPS when no motion is detected

B. Coordinate with owner on the number of user licenses required

C. Provide UPS for backup power to the NVR and peripheral equipment

1. Follow provisions of Section 28000 for UPS power requirements
2. Coordinate with Division 26 to provide a dedicated Emergency Power circuit

2.3 PoE NETWORK SWITCH

A. Provide a fully configured rack mounted PoE Managed 10/100/1000Mbps Layer 3 Switch.

1. Coordinate switch make and model with Owner / Owner network representative prior to purchase to ensure compatibility with existing and non-surveillance related network appliances.
2. Coordinate with Owner / Owner network representative on video surveillance subnet assignment.
3. Switch port count shall allow for 10% growth.

2.4 ACCEPTABLE MANUFACTURERS

A. Video Management System (VMS) Platform Software

1. Milestone Systems
2. Salient Systems
3. Video Insight
4. Owner Approved Equivalent

B. NVR Server: Compatible with VMS Requirements

1. NVR specification compliant hardware

C. Workstation Hardware:

1. Dell
2. HP
3. Owner Approved Equivalent

D. Video Monitor:

1. Viewsonic
2. Samsung
3. Optiquest
4. LG
5. Owner Approved Equivalent

E. Interior Color Camera Dome

1. Panasonic
2. Axis
3. Owner Approved Equivalent

F. Exterior Color Camera Dome

1. Panasonic
2. Axis
3. Owner Approved Equivalent

G. Exterior Color Camera Multisensor

1. Panasonic
2. Axis
3. Owner Approved Equivalent

H. Exterior Parapet/Roof Deck Camera Mount

1. Panasonic
2. Axis
3. Owner Approved Equivalent

I. Wide Angle Megapixel Camera Lens

1. Computar
2. Theia
3. Owner Approved Equivalent

J. Camera Power Supply

1. Altronix
2. Alarm-Saf
3. LifeSafety Power
4. Owner Approved Equivalent

K. Equipment Racks and Racks Components: (By Division 27)

1. Chatsworth Products (CPI)
2. Ortronics
3. Newton Instruments
4. Owner Approved Equivalent

L. Lockable Equipment Cabinet and Components: (By Division 27)

1. Chatsworth Products (CPI)
2. Ortronics
3. Newton Instruments
4. Owner Approved Equivalent

M. Media Converter - Copper-to-Fiber Outdoor rated (Hardened for extreme temperatures)

1. Axis Communications
2. Pelco
3. IFS / UTC Security
4. Owner Approved Equivalent

N. PoE Network Switch

1. Brocade
2. Cisco
3. Juniper
4. Arista
5. Owner Approved Equivalent

O. Video Wire & Cable

1. Windy City
2. General Cable
3. Belden
4. CommScope
5. Owner Approved Equivalent

P. Uninterruptible Power Supply (UPS)

1. Eaton UPS
   a) 5S series for workstations
   b) 9170 for rack mounted equipment
2. APC Smart-UPS Series
   a) SMT series for workstations
   b) Smart-UPS on-Line series for rack mounted equipment
3. MinuteMan
   a) Pro series for workstations
   b) Enterprise Plus series for rack mounted equipment
4. Owner Approved Equivalent

PART 3 - EXECUTION

3.1 CONFIGURATION

A. Video Cameras

1. Provide day/night cameras in exterior locations
2. Lenses shall be field tested with Owner present to verify clear, crisp images and desired field of view
   a) Substitute camera lenses as necessary to obtain required field of view at no additional cost
   b) Provide spot filters for exterior lenses as required to reduce picture washout caused by sunlight

B. IP PoE Cameras

1. The security integrator shall coordinate network and IP address requirements with Owner to identify the Media Access Control (MAC) address (Layer 2) of each provided camera, the location to be installed, and the port configuration needed for communication.
2. Make all necessary adjustments to camera lenses to obtain clear, crisp images and desired field of view to the Owners satisfaction.
    a) Substitute camera lenses as necessary to obtain required field of view at no additional cost.
        1) Adjust all cameras to produce high-definition images with no blooming, streaking or noticeable lag.
        2) Provide and install in-line PoE injectors as required when non PoE network switches are used or when manufacturer specified power is not available to the camera.
        3) All camera power shall comply with the specified power requirements.

3.2 POWER REQUIREMENTS

A. Provide uninterruptible power supplies for all active surveillance equipment

1. Rack mounted components, including all active network communication hardware, shall be on an Uninterruptible Power Supply <UPS> system.
2. Refer to Section 280000 for UPS and power requirements
3. Camera power supplies shall be on an Auxiliary Power Supply <APS>, system as required, with a battery backup.
    a) The Auxiliary power supply shall be furnished with a power distribution panel with each camera individually fused or protected with an over-current protector.

B. Power supplies shall provide:

1. 120 VAC input and output voltage as required
2. UL Listed
3. Power fail contacts to monitor the status of the input power
    a) Connect each power supply power fail alarm as a separate alarm input into AC/ID system
4. Key lockable wall mount metal enclosure with tamper switch
5. Independently fused outputs

3.3 INSTALLATION

A. Refer to provisions of Section 280000

B. All surveillance system devices and components shall be compatible.

C. Camera Housings and Mounts

1. Cameras shall include housings and mounts as indicated in the Drawings.
    a) Provide the smallest available housing for each camera application.
        1) Integrated miniature dome cameras are preferred
2. Wiring to cameras shall pass from the back-box through the mount and into the housing. Exposed wiring or conduit shall not be acceptable.
3. Provide sun shields for camera housings in outdoor locations exposed directly to sunlight.

4. Provide surge protection for power and copper video cables for exterior cameras at the camera and at the point of termination (security rack).
5. Field verify the exact camera location, position, and mounting prior to installation.
6. Roof mounted cameras shall use roof deck brackets.

D. Video Management Control System

1. System platform software shall be 'open architecture' allowing for compatibility and integration with other building automated systems.
2. The system shall allow for secure remote viewing of live and recorded video as required.

E. Provide labeling suitable to Owner for all major equipment components. Coordinate with Owner on numbering scheme to match existing. Major equipment components:

1. IP Video monitors, IP camera Patch Panels, PoE Switches (or mid-span units), Network Video Recorders (NVR), and fiber mux units (if required).

F. Coordinate with Telecommunication subcontractor for network and patch panel provisions for security connections in the IT room. (If applicable)

G. Coordinate with Owner for all system programming and database requirements.

1. Provide all programming, setup, camera and device titling and data entry
2. Camera and device title and descriptions shall be consistent for all components

H. Install all Point-to-Point wiring with appropriate terminal connections for every wire and component termination so that all connections are mechanically and electrically secure.

I. Install field wiring in continuous lengths, without splices.

J. Verify upon job completion that all wiring and terminations are clearly labeled to identify the wire and terminal.

K. Testing of the surveillance system includes checkout of installed cameras back to the Security head end equipment to confirm proper operation of camera assemblies. Security integrator shall provide all necessary test equipment to fully demonstrate proper performance of field devices. Copies of test results shall be included in the project completion submittals given to the Owner.

END OF SECTION 28 23 00

SECTION 28 31 00 - FIRE ALARM SYSTEM AND SMOKE DETECTION SYSTEM

PART 1 - GENERAL

1.01 SCOPE

A. The contractor shall furnish and install a complete microprocessor based 24VDC, electrically supervised, analog intelligent fire alarm system as specified herein and indicated on the drawings. The system shall include, but not be limited to, all control equipment, power supplies, signal initiating and signaling devices, conduit, wire, fittings, and all other accessories required to provide a complete and operable system.

B. The system shall operate as a non-coded, continuous sounding system, which will sound alarm devices until manually silenced, as herein specified.

C. The system shall be wired as a Class B and Style 4 supervised system for all circuits.

1.02 CODES AND STANDARDS

A. The system shall comply with the applicable Codes and Standards as follows:

1. National Electrical Code - Article 760.
2. National Fire Protection Association Standards:
   NFPA 70 NEC
   NFPA 72 Protective Signaling Systems (current State adopted version)
   NFPA 90A Air Conditioning
   NFPA 101 Life Safety Code
   UL 1971 Visual Devices
   ANSI 117.1 Visual Devices
3. Local & State Building Codes
4. Requirements of Local Authorities having Jurisdiction. If local authorities design requirements differ substantially from contract drawings, the design engineer shall be notified no less than 10 days prior to bid date, to allow time for addendum to be provided to all contractors. Contractor to provide additional devices as required by local authorities in bid pricing.
5. Underwriters Laboratory Requirements and Listings for use in Fire Protective Signaling Systems as follows:
   UL 864 Control Panels 9th Edition
   UL 268 Smoke Detectors - Systems
   UL 268A Duct Smoke Detectors
   UL 521 Heat Detectors
   UL 228 Door Holder-Closers
   UL 464 Audible Signaling Appliances
   UL 1971 Visual Signaling Appliances
   UL 38 Manual Alarm Stations

1.03 ACCEPTABLE MANUFACTURERS

A. To establish the type, quality, and features of system required, the equipment specified is that of the Notifier Fire Systems.

B. All equipment, materials, accessories, devices, etc. covered by the specifications and/or noted on the contract drawings shall be new and unused and be U.L. listed for their intended use.

C. All references to manufacturer or supplier's model numbers and other pertinent information herein is intended to establish a minimum standard of quality, performance and features required. All equipment proposed as an EQUAL to that specified shall COMPLETELY conform to the specifications herein.

D. Equipment of other manufacturer's or supplier's may be considered as an equal to that specified provided that completely marked and identified catalog sheets of all proposed equipment is provided to the architect/ engineer for review ten (10) days prior to the date of bid for evaluation. In addition, a list of the contractor's qualifications and any exceptions to the specifications must be provided for review. Approval for any such substitution of equipment must be obtained in writing from the architect/engineer five (5) days prior to bid.

E. Provide one of the following manufacturers:

1. Notifier Fire Systems
2. Siemens
3. Edwards System Technology (EST)

1.04 GENERAL REQUIREMENTS

A. Contractor Qualifications:

1. The equipment supplier shall be an authorized and designated representative of the Fire Alarm Manufacturer to sell, install, and service the proposed manufacturer’s equipment.
2. The equipment supplier and installing contractor shall be licensed by the State Fire Marshall to sell, install, and service fire alarm systems as required by Article 5.43-2 of the Texas Insurance Code.
3. The installing contractor and/or equipment supplier shall have on his staff a minimum of three (3) installation superintendents who are licensed by the State Fire Marshall’s office for such purpose and under whose supervision installation, final connections, and check out will take place as required by the Texas Insurance Code.
4. The installing contractor or equipment supplier shall have on staff a minimum of one (1) certified NICET Level III state licensed fire alarm planner under whose supervision system design shall take place.
5. The installing contractor shall provide 24 hour, 365 days per year emergency service with qualified and state licensed service technicians.
6. The installing contractor shall have been actively engaged in the business of selling, installing, and servicing fire alarm systems for at least ten (10) years.

1.05 SUBMITTALS

A. The installing contractor and/or equipment manufacturer shall provide complete and detailed shop drawings and include:

1. Control panel configuration including wiring and interconnection schematics.
2. Complete point to point wiring diagram showing terminal connections to all system devices.
3. Riser wiring diagram and associated zoning/addressing configurations with associated conduit sizes.
4. Complete floor plan drawings locating all devices associated with the fire alarm system. Floor plan drawings shall include conduit and wiring routing complete with conduit sizing and number of conductors by type.

5. Factory data sheets on each piece of equipment to be used and so marked as to model, dimensions, size, voltage, and configuration.
6. Detailed system description in this specification format describing system functions and operation. All specification variations and deviations shall be clearly noted and marked.
7. Complete Bill of Material for reference.
8. Programming matrix defining all input/output functions and zoning.
9. Power supply and battery calculations.
10. A letter from the manufacturer stating that the fire alarm system contractor is authorized to sell, service and install the submitted equipment.

B. Submittal shall include documentation confirming all qualifications in 1.04-A have been met. Submittals without qualification documentation shall be rejected.

C. All submittal data will be in bound form with contractor's name, supplier's name, project name, and state fire alarm license number adequately identified.

D. Only basic equipment devices have been shown on the contract drawings. Specific wiring between equipment/devices has not been shown. It is the contractor's responsibility to submit for approval the COMPLETE ENGINEERED system configuration and layout showing all devices, wiring, conduit, and locations along with other required information as specified herein.

1.06 COORDINATION

A. It shall be the responsibility of the installing contractor to coordinate all requirements surrounding installation of the fire alarm system with all trades including, but, not exclusive of: electrical contractor, sprinkler contractor, and HVAC/controls contractor and intercom system. Adequate coordination shall be provided to insure proper installation and interface to all peripheral items required to interact with the fire alarm and communication system to provide a complete and functional life safety system.

PART 2 – PRODUCTS

2.01 SYSTEM FUNCTIONAL OPERATION

A. Alarm Detection

1. When a fire alarm condition is detected by any of the system alarm initiating devices, the following functions shall occur:
   a. The system common alarm LED on the CPU Module shall flash. The internal audible trouble device shall sound. Acknowledgement or silencing the alarm condition shall silence the alarm signals and cause flashing alarm LED's to illuminate steady.
   b. An 80-character back-lit LCD display shall indicate all applicable information associated with the alarm condition including: zone, device type, divide location, and time of alarm. Location and zoning messages shall be custom field programmed to respective premises.
   c. Any remote or local annunciator LED's associated with the alarm zone shall be illuminated as herein specified.
   d. A three-channel digital alarm communicator shall be integrally provided and transmit trouble and alarm signals to an approved remote station (remote station connection and service provided by Owner).
   e. All automatic events programmed to the alarm point shall be executed and the associated indicating devices and/or outputs activated.

f. Activate all audible and visual alarm notification devices.
g. De-activate HVAC systems over 2000 CFM.

B. System Trouble Detection

1. When a trouble condition is detected by the CPU, one of the system initiating, alarm or SLC circuits, the following functions shall immediately occur:
   a. The system trouble LED on the CPU module shall flash and the internal audible trouble device shall sound. Acknowledgement of the trouble condition shall silence the audible trouble device and cause all trouble LED's to illuminate steady.
   b. The 80-character alphanumeric LCD annunciator shall display all applicable information via the alphanumeric display associated with the respective trouble condition and its location.

C. Auxiliary Control

1. All designated "non-silenceable" auxiliary control functions shall remain in operation (even upon silencing of audible alarms) until such time as the control panel is cleared and reset manually (i.e. fan control outputs, central station interface, elevator recall interface, etc.).
2. Activation of duct smoke detectors associated fans shall shutdown their respective units immediately in addition to identifying the condition as herein specified.

D. System Supervisory Detection

1. When a supervisory condition is detected by the fire alarm control panel, the following functions shall occur:
   a. The fire alarm control panel supervisory indicator shall flash and the internal audible device shall sound. Acknowledgment of the supervisory condition shall silence the audible device and cause the supervisory indicator to illuminate steady.
   b. The 80-character liquid crystal display shall display all applicable information associated with the respective supervisory condition.
   c. Activate a supervisory contact closure to interface with the owner provided central station monitoring service.

2.02 ZONING

A. The system shall have the inherent capability to employ "Intelligent' smoke detectors and addressable interface devices capable of being recognized and annunciated at the main control panel on an individual basis. All zoning/device location information shall be totally field programmable to exact job requirements as approved by the Architect/Engineer.

2.03 FIRE ALARM CONTROL PANEL

A. The fire alarm control panel shall be Notifier series NFS-320R. The control panel shall utilize DISTRIBUTED solid state MICROPROCESSORS. The microprocessor based CPU shall be completely FIELD PROGRAMMABLE. CPU module shall provide for programmable non-volatile EEPROM memory. All circuitry shall be U.L. listed for power-limited application. System shall be sized to accommodate the capacity of the system specified and shown on the drawings. System shall be capable of being networked for future expansion.

B. Central Processing Unit Module (CPU)

1. The CPU shall contain and execute all custom time control functions or control-by-event programs for specified events including 'Holiday' exceptions. Time control event/programs shall be automatically overridden by priority fire alarm events. All programs shall be held in non-volatile programmable EEPROM memory, and shall be lost if both system primary and secondary power failure occurs
2. System CPU shall also provide for non-alarm points for non-fire, low priority building functions. The CPU shall provide capability of multi-stage signaling, tornado warning, positive alarm sequencing as well as remote control system operation.

C. Display

1. The DIA shall provide an 80-character backlit, supertwist Liquid Crystal Display (LCD). It shall provide Light-Emitting Diodes (LED's) for AC POWER; SYSTEM ALARM; SYSTEM TROUBLE; SUPERVISORY; CPU FAIL; and ALARM SILENCED.
2. The display shall provide power to a 21-key membrane keypad with control capability to command all system functions, status readouts, manual control action, and entry of any alphanumeric or numeric information. The keypad shall include means to enter multiple five digit passwords to prevent unauthorized manual control programming.

D. Control Switches

1. Acknowledge/Step Switch
2. Signal Silence Switch
3. Evacuate
4. Lamp Test/Reset

E. System Outputs

1. The system shall provide the following outputs:
   a. One port for CRT, modem, and/or printer (RS-232c)
   b. One port for supervised remote LED annunciators (RS-485)
   c. Four Style Y supervised alarm signaling circuits

F. Loop Interface (SLC)

The CPU shall communicate and provide power to all devices on its loop over a single pair of wires. The CPU shall receive digital/ANALOG information from all "intelligent" detectors and shall process this information to determine normal, alarm, trouble, and sensitivity conditions. The analog information may be used for automatic test and determination of maintenance requirements, and be U.L. listed for such use. The CPU module shall individually monitor all "intelligent" detectors for sensitivity variation initiating a trouble condition should detector sensitivity "drift" become excessive. The system control unit shall have the capability to remotely read each detector's sensitivity in % obscuration, and if need be, electronically adjust the detector sensitivity as required for existing conditions within U.L. recommended limits. In addition, the system shall incorporate a "day/night" sensitivity feature. The system shall provide capability to program each individual detector for multiple 'pre-alarm' conditions. Each 'pre-alarm' level shall be field programmable as a function of the programmed alarm level. The system shall allow designated control-by-event actions to occur as may be required prior

to any sensor reaching the designated alarm point.

G. Non-Lock Walk Test

The system shall include a special non-lock "walk test" mode. The walk test mode shall incorporate a one-hour time-out feature to return system to normal. Test results shall be capable of being generated and displayed on LCD annunciator or printed out on system printer.

H. Automatic Detector Test

The system shall include a special automatic detector test feature, which permits reading and adjustment of the sensitivity of all intelligent detectors from the main control panel. In addition, the automatic test feature shall also permit the functional testing of any "intelligent" detector or addressable interface device individually from the main control panel. An automatic detector test shall occur automatically a minimum of every two-hour period or be initiated manually from the FACP as desired. Automatic detector test sequencing shall be terminated upon receipt of a true alarm condition.

I. Special System Reports

The system shall have the ability to generate and print, upon command, system and point status reports. Selection of 'system' read status provides the operator with global system programming information as well as providing the operator with all individual point programming data. The system shall also provide the capability to print out a detailed 'history' report from system history file upon command.

J. Field Programming

The system shall be 100% field programmable without the need for external computers or, PROM programmers, and shall NOT require replacement of memory IC's. All programs shall be stored in non-volatile EEPROM memory. Programming shall be accomplished only after entering an appropriate and pre-selected five-digit password security code. System programming mode shall **NOT** require the system to be taken off-line nor prohibit the system from performing its normal operations and routines. The system shall be capable of revising/changing programmed functions or system expansion at any time subsequent to initialization as described herein without factory modifications or factory programming. Field programming via the use of external computers may be considered provided programming can be accomplished on-site and the owner is permanently furnished with the required programming apparatus and software as part of this contract.

K. Event History

The main fire alarm panel shall have the resident ability to store a minimum of 600 system events in chronological order of occurrence. Event history shall include all system alarms, troubles, operator actions, unverified alarms, circuit/point alterations, and component failures. Events shall be time and date stamped. Events shall be stored in non-volatile buffer memory. Access to history buffer shall be secured via five-digit password security code. Systems not employing event history memory storage shall be required to furnish a printer/recorder for recording system events.

L. Power Supply

The power supply shall provide all control panel and peripheral power needs with filtered power as well as rectified 24VDC power for external audio-visual devices. All power

supplies shall be designated to meet UL and NFPA requirements for POWER-LIMITED operation on all external signaling lines, including initiating circuits and indicating circuits.

Input power shall be 120VAC 60Hz. The power supply shall provide internal supervised batteries and automatic charger. The power supply shall provide both positive and negative ground fault supervision, battery/charger fail condition, A.C. power fail indicators. The power supply shall also provide supervision of modular expansion power supplies as may be required.

2.04 FIELD DEVICES

A. Intelligent Photoelectric Smoke Detectors

1. Notifier model FSC-851 analog photoelectric smoke detectors shall be provided where indicated on the drawings. The detectors shall use the photoelectric principal to measure smoke density and shall, on command from the control panel, send data to the panel representing the ANALOG level of smoke density. The detector shall provide automatic sensitivity “drift” compensation. The detector shall also provide a “maintenance alert” feature whereby the detector shall initiate a trouble condition should the unit’s sensitivity approach the outside limits of normal sensitivity window.
2. Each detector shall interface directly to the system SLC loop without the use of zone modules.

B. Intelligent Duct Detector

Notifier model FSD-P series duct mounted “intelligent” **photoelectric** smoke detectors shall be provided per applicable codes. Detectors shall operate on the same principles and exhibit the same basic characteristics as area type “intelligent” smoke sensors. The unit shall be capable of interchanging/accepting either photo-electronic or ionization type sensors. The detector shall operate in air velocities of 300 FPM to 4,000 FPM. Each detector shall interface directly to the system SLC loop without the use of zone modules.

The unit shall consist of a clear noryl molded plastic enclosure with integral conduit knockouts. The unit shall be provided with clear faceplate cover to provide visual viewing of detector/sensor for monitoring sensor operation and chamber condition. The duct housing shall be provided with gasket seals to insure proper seating of the housing to the associated ductwork. Each unit’s sampling tubes shall extend the width of the duct and be provided with porosity filters to reduce sensor/chamber contamination. Detectors shall be installed per NFPA 90A, and be listed with the fire alarm control panel. A remote LED shall be located on the corridor ceiling adjacent to the respective detector where detectors are not plainly visible or concealed from view.

C. Intelligent Thermal Detectors

1. Notifier Model FST-951R analog, fixed temperature and rate of rise thermal detectors shall be provided where indicated on the drawings. The detectors shall use dual electronic thermostats to measure temperature levels in the chamber and shall, on command from the control panel, send data to the panel representing the analog temperature level.
2. The detectors shall provide address-setting means on the detector heat using rotary decimal switches. No binary coding shall be required. Systems requiring separate detector programming apparatus will be unacceptable.
3. The detectors shall provide dual alarm and power/status LED's. Status LED's shall flash under normal conditions, indicating that the detector is operational and

in regular communication with the control panel. Both LED's may be placed into steady illumination by the control panel, indicating that an alarm condition has been detected. An output connection shall also be provided in the base to connect an external remote alarm LED.

4. The detector shall be semi-flush ceiling mounted and be provided with modular detector head with twist-lock base.
5. Provide weatherproof heat detectors in the Garage Areas.

D. Intelligent CO Sensor

1. Notifier FCO-851 analog, smoke, fixed temperature and rate of rise thermal detectors with modular CO sensor shall be provided where indicated on the drawings. The detectors shall use dual electronic thermostats to measure temperature levels in the chamber and shall, on command from the control panel, send data to the panel representing the analog temperature level.
2. The detectors shall provide address-setting means on the detector heat using rotary decimal switches. No binary coding shall be required. Systems requiring separate detector programming apparatus will be unacceptable.
3. The detectors shall provide dual alarm and power/status LED's. Status LED's shall flash under normal conditions, indicating that the detector is operational and in regular communication with the control panel. Both LED's may be placed into steady illumination by the control panel, indicating that an alarm condition has been detected. An output connection shall also be provided in the base to connect an external remote alarm LED.
4. The CO sensor shall constantly monitor the electrochemical cell and render a trouble when it reaches its end of life. The carbon monoxide sensor/daughterboard shall be field replaceable.
5. The detector shall be semi-flush ceiling mounted and be provided with modular detector head with twist-lock base.

E. Addressable Manual Stations

1. Notifier Model NBG-12LX manual stations shall be provided where indicated on the drawings. The manual station shall provide address-setting means using rotary decimal switches. No binary coding shall be required.
2. Manual stations shall be designed for semi-flush mounting on standard electrical box. The station shall be constructed of hi-impact red molded Lexan with instructions for station operation in raised white letters. Stations shall be of the dual action type.

F. Monitor Module

1. Notifier model FMM-101 addressable monitor modules shall be provided where required to interface to contact alarm devices. The monitor module shall be used to connect a supervised zone of conventional initiating devices to an intelligent SLC loop.
2. The monitor module shall provide address-setting means using rotary decimal switches. No binary coding shall be required.

G. Control Module

1. Notifier model FCM-1 or FRM-1 control and relay modules shall be provided where required to provide audible alarm interface and/or relay control interface. The control module shall be used to connect a supervised zone of conventional indicating devices to an intelligent loop. The zone may be wired class A or class B - field selected. The control module may be optionally wired as dry contact

(form C) relay.

2. The control module shall provide address-setting means using rotary decimal switches. No binary coding shall be required. A status LED shall be provided which shall flash under normal conditions, indicating that the control module is operational and in regular communication with the control panel. The LED shall illuminate steady when the device is actuated via the fire alarm control panel.

H. Electronic Audio Visual Devices

Audible/Visual alarm devices shall be Notifier “P” Series SpectAlert Advance electronic horn/strobe units, to be located where indicated on the drawings. Devices shall be wall or ceiling mounted as indicated on the drawings. AV devices shall be provided with the ability to provide multiple candela settings. Units shall operate at 24VDC and be polarized supervised. Each unit shall provide a choice of three difference audible tones capable of being field selected. Preferred alarm signal shall be a temporal tone producing a sound pressure level of 84 dBA. The visual device shall use Xenon strobe type producing a minimum of 15 candela on a 24 VDC limited energy supervised circuit and meet the requirements of ADA and TAS. Strobe unit shall automatically flash upon operation of the horn. Horn/strobe unit shall be provided in textured white finish and be flush mounted.
All visual devices shall be synchronized.

I. Electronic Alarm Horn

Provide Notifier H Series solid state electronic alarm device where indicated on the contract drawings. Units shall operate at 24 VDC and be polarized supervised. Each unit shall provide a choice of three different audible tones capable of being field selected. Preferred alarm signal shall be a temporal tone producing a sound pressure level of 84 dBA.

Units shall be flush mounted and molded of high-impact white plastic.

J. Exterior Audio Visual Devices

All audio visual devices located outside or labeled weatherproof shall be weatherproof. Provide the following devices:

1. SpectAlert Advance “PK” Series for audio/visual devices.
2. SpectAlert Advance for “SK” Series for visual devices

All devices shall be provided with a weather proof type back box.

K. High Intensity Visual Signals

Provide a Notifier “S” Series SpectAlert Advance visual signal device. High intensity visual signals shall be installed where shown on the drawings and as may be required by the Americans with Disabilities Act (Public Law 101-336) and TAS.

High intensity visual alarms shall be Xenon strobe type producing a minimum of 15 candela on a 24 VDC limited energy supervised circuit. Alarm devices shall be designated to be wall or ceiling mounted as indicated on the drawings. Signals shall operate in unison with audible alarm appliances. All visual devices shall be synchronized. Units shall be flush mounted and shall be provided in textured white.

L. Auxiliary AHU Relays

Notifier/Air Products model MR-101/C relays or approved equal shall be provided for

HVAC and AHU control and interface. Relays shall be heavy duty type and rated up to 10 amps at 24 VDC, 60 HZ. Relays shall be provided with NEMA I dust cover assembly and be provided with SPDT contacts as well as (fail safe) so that if the cable is broken, disconnected etc., the AHU will automatically shutdown.

M. Field Charging Power Supplies

Provide Notifier FCPS-24 power supplies with battery backup as required. Provide 120 volts dedicated circuit to each power supply.

N. Remote LCD Alpha-Numeric Annunciators

Provide where indicated on the drawings, a Notifier FDU-80 remote LCD alpha-numeric annunciator to annunciate all system events and duplicate the displayed status at the main FACP. The annunciator shall be a backlit eighty-character LCD display and operate via the system RS485 and RS232 serial output terminal from main FACP. The LCD display shall automatically illuminate upon receipt of an alarm or trouble condition. The illuminary source shall extinguish during normal/standby model to conserve power. The unit shall operate from FACP 24VDC power and function during system power failure while the system resides on standby batteries. The remote LCD annunciator shall include:

- Integral time-date clock
- Time-date select clock
- Time-date/contrast adjust
- Display/step switch
- System reset
- System silence
- System acknowledge
- Integral trouble buzzer

Annunciator shall upon command display the first system alarm, last alarm, and system alarm count. The unit shall be equipped with an integral lamp test feature. The unit shall be semi flush mounted where shown.

O. Protective Covers

Provide protective covers on wall mounted fire alarm devices located in student restrooms, corridors. These protective covers shall be manufactured by Safety Technology International, Inc. (STI). These covers shall be provided on all devices including but not limited to smoke detectors, heat detectors, audible and visual devices, pull stations, etc. The mounting of a device shall be reinforced to enable the protective covers to protect the fire alarm devices.

PART 3 - EXECUTION

3.01 INSTALLATION

A. Wiring:

1. All wiring shall be in accordance with NFPA 72 and the National Electrical Code, Local Codes, and article 760 of NFPA Standard 70. All wiring sizes shall conform to recommendations of the equipment manufacturer, and as indicated on the engineered shop drawings.
2. All wire shall be U.L. Listed, limited energy (300 volt) FPLP or MPP wire and shall be run open in return air ceiling plenums. The wire shall be listed to U.L. TEST 910 for such applications and is of the low smoke producing fluorocarbon type and complies with NEC Article 760 if so approved by the local authority having jurisdiction. Provide conduit in all inaccessible locations, inside concealed wall, all mechanical/electrical rooms, or other areas where wiring might be exposed and subject to damage.

3. Support wire clear of knock out panels, access panels, and maintenance spaces for equipment. Wire and cable shall be run using wire management techniques supporting cable as close as possible to within one foot of the floor or roof rafters. Wire supports shall be directly fastened to the structure on a maximum of five foot centers. Wire routing shall be parallel and perpendicular to building lines. The wire and cable shall be secured with tie wraps or carrier wire. Sagging in excess of three inches will not be allowed nor will bending of the supporting ring structure.
4. All wiring for SLC signaling circuits shall be of the twisted low capacitance type to guard against outside RF and EMF interference and induced noise.
5. All wiring shall be run in a supervised fashion (i.e. no branch wiring or dog-legged wiring) per NFPA requirements such that any wiring disarrangement will initiate the appropriate trouble signals via the main control panel per NFPA and U.L. requirements.
6. Wiring splices shall be kept to a minimum with required splices to be made in designated terminal boxes or at field device junction boxes. Transposing or color code changes of wiring will not be permitted. End-of-line supervisory devices shall be installed with the last device on the respective circuit. Said device shall be appropriately marked designating it as the terminating device on the respective circuit.
7. No A.C. wiring or any other wiring shall be run in the same conduit as fire alarm wiring.

B. Conduit/Raceway

1. All wire shall be installed in an approved conduit/raceway system (except where permitted by NEC and the local authority having jurisdiction). Maximum conduit "fill" shall not exceed 40% per NEC.
2. Conduit and raceway system shall be installed as specified under the general electrical section of the specifications, and per NEC.
3. Minimum conduit size shall be 3/4" EMT. Install conduit per engineered shop drawings.

C. Minimum Wire Sizes Shall Be As Follows:

1. Signaling Line Circuit: 18 AWG
2. Notification Appliance Circuit: 14 AWG
3. Relay Control Circuits: 18 AWG

D. Sprinkler Valves

1. Contractor shall connect all tamper switches and post indicator valves to the supervisory circuit. Connect all water flow switches to the alarm circuit. Coordinate exact locations of water vaults valves and flow switches with sprinkler contractor.

3.02 NOTIFICATION APPLIANCE CIRCUITS SYNCHRONIZATION

A. All visual and audible devices shall be synchronized per the current state adopted version of NFPA 72. Provide all components required.

3.03 TEST AND REPORTS

A. A state licensed factory trained technical representative of the manufacturer shall perform the final control panel connections and supervise testing of the system and it shall be

subject to the approval of the responsible engineer and owner. Upon completion of the acceptance tests, the owner and/or his representatives shall be instructed in the proper operation of the system.

B. The installing contractor shall functionally test each and every device in the entire system for proper operation and response. In addition, each circuit in the system shall be fully tested for wiring supervision to insure proper wiring installation. Any items found not properly installed or non-functioning shall be replaced or repaired and re-tested. All testing shall be supervised by a licensed fire alarm superintendent.

C. The installing contractor shall provide a complete written report on the functional test of the entire system. The test and report shall verify the function of each device in the system, operation of all auxiliary control functions, and the proper operation of the main fire alarm control panel. A copy of the test report shall be provided with maintenance manuals. The test report shall be signed and dated by the licensed fire alarm superintendent responsible for supervising the final system test and checkout.

D. The installing contractor's fire alarm superintendent shall test the entire system in the presence of the local authorities having jurisdiction.

3.04 SPARE DEVICES

A. Provide 5% spare field devices including labor to install them. Devices not used shall be given to the Owner at completion of the job.

3.05 WARRANTY

A. The fire alarm system shall be free from defects in workmanship and materials, under normal use and service, for a period of one year from the date of acceptance or beneficial occupancy, whichever shall occur first. Any equipment shown to be defective shall be repaired, replaced or adjusted during normal working hours at no cost to the owner.

3.06 GRAPHIC FLOOR PLANS

A. Provide 1/16” = 1’-0” floor plan showing all devices and zoning. Zoning shall correspond to the zone on the fire alarm control panel. The floor plans shall be framed with a glass cover and located by the fire alarm control panel. This graphic floor plan shall use the actual room numbers based on the architectural graphics package. Verify specific requirements with Owner. Provide a sample for approval.

END OF SECTION

SECTION 31 11 00

CLEARING AND GRUBBING

PART 1 – GENERAL

1.01 GENERAL DOCUMENTS:

A. The Terms and Conditions of the Contract, including Supplementary and Special Conditions of the Contract, and the Drawings apply to this Section.

1.02 SUMMARY

A. Section Includes:
1. Site Preparation.
2. Erosion protection, noise and dust control.
3. Location and protection of improvements shown to remain.
4. Trench Safety.

1.03 RELATED WORK

A. Related work of other sections includes but is not limited to:
1. TPDES Storm Water Pollution Prevention Plan
2. Section 31 00 00 – Site Earthwork

1.04 PROJECT CONDITIONS

A. Contractor is referred to the Special Conditions and to other applicable sections of these Specifications in regard to protection of existing improvements and property shown to remain, as well as the proper barricading of all work areas.

B. Erosion Protection: Provide erosion control as shown on the plans and maintain for the duration of the project. Provide routine maintenance as required to maintain integrity of erosion and sedimentation protection measures and remove any accumulations of mud or debris which would jeopardize the integrity of control measures. Refer to plans for details.

C. Dust Control: The Contractor shall exercise care during site clearing operations to confine dust to the immediate work area and shall employ dust control measures to the satisfaction of the Owner to ensure adequate dust control throughout site clearing operations.

D. Street Conditions:
1. The Contractor shall be required to remove mud or debris from existing adjacent streets scheduled to remain in service throughout his contract period.

2. The Contractor shall be responsible and protect the Owner from damage during haul operations. Any damage shall be repaired at the Contractor's expense.

E. The use of explosives will not be permitted.

1.05 SALVAGE OF MATERIALS

A. Contractor to deliver to the Owner all items that are specified to be salvaged and retained by the Owner (as applicable and shown on the Drawings). The Contractor has salvage rights for all other existing materials, parts, or accessories scheduled for demolition.

B. All items specified to be removed or required to be removed because of conflicts with proposed improvements shall be removed from the Owner's property in a timely manner.

1.06 LEGALLY PERMITTED LANDFILL – CERTIFICATION

A. The Contractor shall dispose of all materials in a legally permitted landfill, permitted to accept construction waste, as determined by the Texas Department of Health, Municipal Solid Waste Management Regulation.

B. The Contractor shall be required to provide written evidence of the permitted landfill prior to commencement of site clearing operations.

1.07 DEMOLITION

A. Removal of Miscellaneous Items: Contractor shall remove all other miscellaneous items not identified elsewhere, for the purposes of carrying out the Work, and dispose of in accordance with Item 1.6 of this Section.

1.08 REFERENCES

A. OSHA Excavation and Trench Safety Standards.
1. 29 CFR Part 1926 - OSHA Health and Safety Standards for Excavations.

B. ASTM: American Society for Testing and Materials, 1916 Race Street, Philadelphia, Pennsylvania 19103, U.S.A.
2. ASTM D4318-00 – Standard Test Methods for Liquid Limit, Plastic Limit, and Plasticity Index of Soils

PART 2 – PRODUCTS

2.01 TREE WOUND PAINT

A. Bituminous based paint of standard manufacture specially formulated for tree wounds.

2.02 HERBICIDE

A. Comply with Federal Insecticide, Fungicide, and Rodenticide Act (Title 7 U.S.C. Section 136) for requirements on contractor's licensing, certification and record keeping. Contact the command Pest Control Coordinator prior to starting work.

PART 3 – EXECUTION

3.01 PROTECTION

A. Roads and Walks
   1. Keep roads and walks free of dirt and debris at all times.

B. Trees, Shrubs
   1. Protection shall be in accordance with project plans.

C. Utility Lines
   1. All existing utility locations shown on plans are approximate, based on information provided by utility service providers and field surveys. Utilities were not uncovered to determine precise locations, except as noted on the plans. The contractor shall verify the location of underground utilities and drainage structures at least forty-eight (48) hours prior to construction, whether shown on the plans or not, and shall protect same during construction.
   2. Protect existing utility lines that are not identified to be removed. Notify the Architect immediately of damage to or an encounter with an unknown existing utility line. The Contractor shall be responsible for the repairs of damage to existing utility lines that are indicated or made known to the Contractor prior to start of clearing and grubbing operations. When utility lines which are to be removed are encountered within the area of operations, the Contractor shall notify the Architect in ample time to minimize interruption of the service.

3.02 SITE CLEARING AND GRUBBING

A. All areas of proposed construction shall be stripped of existing vegetation, concrete, asphalt and six inches (6") of topsoil, except as noted on the plans. Topsoil is to be stockpiled for reuse on the project, as directed below. The exposed subgrade shall be proof rolled with at least a 15 ton pneumatic roller to detect weak soil support areas. These areas will be removed and replaced according to the following:

B.

1. Areas not designated for new improvements shall be reshaped and filled to finished grade, less topsoil requirement.
2. Areas designated for new improvements shall be reshaped and filled to subgrade with material meeting requirements for select fill material.

a. Place lifts of select fill in thin, loose layers not exceeding nine inches in thickness to the desired rough grade and compact to a minimum of 95% of the maximum density defined by ASTM D698.
b. Maintain moisture within a range of optimum -1% to optimum +3%.
c. Conduct in-place density tests at a rate of one test per 3,000 square feet for every lift with a minimum of 2 tests per lift.
d. For select fill placed above the existing groundline, extend the lateral limits of the fill at least 5 feet beyond the perimeter of the building area, transitioning back to the existing groundline on a 3:1 (horizontal/vertical) slope.

C. Take all measures necessary to protect trees to remain from construction damage and keep them healthy during the construction process. This includes trees inside construction fences and adjacent to any construction activities.

D. Clear and grub all existing trees and understory where indicated on the drawings.

1. Remove all dead trees and tree limbs or trees that have substantial structural or cosmetic damage.
2. Remove all climbing vines to a height of 30’ above the ground. Grub out vine roots.
3. Remove all broken limbs and vines on trees that could fall and pose a hazard to pedestrians.
4. Spray all Poison Ivy with two (2) applications of a contact herbicide labeled for such use. After a complete kill has been achieved, grub out all plants and roots. Do not burn any part of Poison Ivy plants.
5. Remove Briars and other vines and brambles where these plants have grown up into trees.
6. Remove old fences and fence posts. In cases where wire penetrates existing trees to remain the wire shall be trimmed back flush with the tree bark.
7. Remove logs and stumps higher than four inches (4”) above grade and other debris from this area. Backfill holes in accordance with Section 3100 00 – Site Earthwork.
8. Trim tree limbs to allow five feet (5’) clearance above ground.
9. Remove any trash or man-made debris from this area.
10. All material generated by pruning and clearing process shall be disposed of legally off-site.

E. Perform these operations under the direction of the licensed arborist.

F. Do not begin operations until limits of clearing and grubbing have been identified and staked out by the contractor and approved by the Engineer of Record.

G. Do no damage to existing plant material, utilities, and/or pavements designated to remain as indicated on the drawings.

H. Fill any depression caused by clearing and grubbing operations; removing any improvements, over or underground, as necessary to facilitate new construction.

I. Disposal will be done legally; no burning is permitted on owner's property.

J. A certified arborist shall perform all pruning. Contractor shall submit proof of qualifications and three current references to A/E and Owner for approval prior to commencing any pruning.

3.03 GENERAL STRIPPING OF EXISTING WEEDS AND GRASSES

A. The area within the work limits shown shall be stripped of lawns and vegetation under the direction of the contractor.

B. Method of removal shall remove a minimum amount of topsoil and shall be even so as to not generally change the overall grading.

C. Remove and dispose of all products of stripping from the site. Do not allow material to accumulate at locations in or about the work areas.

3.04 STRIPPING AND REMOVAL OF EXISTING SOD

A. All areas designated shall be stripped of existing sod to a depth of two and one-half (2 1/2") inches, or as deep as necessary to remove the majority of roots.

B. Sod shall be stripped by acceptable means and materials. Products of stripping operations shall be removed from the project area and legally disposed of.

3.05 STRIPPING AND STOCKPILING OF TOPSOIL

A. Prior to starting Final Grading, strip from within the site all suitable topsoil. Strip to a depth of four (4") inches or as necessary to remove all topsoil. Strip topsoil not in a muddy condition and avoid admixtures of subsoil.

B. Strip no soil where grades require only a slight change. Stockpile the topsoil in areas designated on the Drawings or as agreed upon with the Owner. Stockpiled topsoil shall be free from trash and other related material and shall be protected during the duration of the Contract.

C. Stripped and stockpiled topsoil not used for landscape fill or for planting operations shall be removed from the site and legally disposed of.

3.06 DISPOSAL OF MATERIALS

A. Nonsaleable Materials

1. Logs, stumps, roots, brush, rotten wood, and other refuse from the clearing and grubbing operations, shall be disposed of outside the limits of owner's controlled land at the Contractor's responsibility, except when otherwise directed in writing. Such directive will state the conditions covering the disposal of such products and will also state the areas in which they may be placed.

END OF SECTION

SECTION 31 11 10 - WASTE MATERIAL DISPOSAL

PART 1 - GENERAL

1.01 DESCRIPTION

A. Waste material disposal consists of disposal of trees, stumps, logs, brush, roots, grass, vegetation, humus, rubbish and other objectionable matter from operations such as clearing and grubbing, excavation and grading. Unless otherwise specified, the Contractor is responsible for removal and disposal of waste material.

1.02 PAYMENT

A. No separate payment will be made. Include cost of work in contract bid prices.

PART 2 - PRODUCTS

2.01 Specific products are not required. Use equipment and materials necessary to properly complete disposal of waste materials.

2.02 Obtain approval for equipment and materials before beginning disposal of waste materials.

PART 3 - EXECUTION

All waste material becomes the property of the Contractor and is to be removed from the worksite and legally disposed of in a manner not to damage the Owner. All rules of the Texas Commission on Environmental Quality, Texas Air Control Board, and U.S. Environmental Protection Agency shall be followed in the disposal of waste material.

If regulations require, provide "cradle-to-grave" documentation of the disposal including manifests.

3.01 DISPOSAL AREA

A. The Owner will designate areas within limits of this property for disposal of waste materials.

B. Strip the disposal area of vegetation, humus or other debris. Strippings become property of Contractor to be disposed of with other waste materials.

C. Protect trees designated for preservation. Take special care not to damage trees designated for preservation which are outside limits of waste disposal areas.

3.02 COMPACTION AND GRADING

A. Compact waste materials to the density of the surrounding area. Shape the area for proper drainage. Place excess topsoil on waste material in an even layer not greater than three-inches

(3") thick and grade smooth.

END OF SECTION 31 11 10

SECTION 31 23 13

GRADING AND COMPACTION OF SUBGRADE

PART 1 - GENERAL

1.01 SCOPE OF WORK

A. This Section pertains to the earthwork generally consisting of excavation, filling, backfilling and subgrade preparation as required for construction of site retaining walls/structures, slab on grade walks, pavement surfaces, landscaped areas and the general shaping of the site as shown, described or reasonably inferred on the drawings.

B. Subsurface data is available from the Geotechnical Report. Contractor is urged to carefully analyze the site conditions.

C. This section excludes work necessary for building pad preparations. Work within the building footprint and surrounding 5 feet shall be accomplished under technical specification 31 23 00 Excavation and Fill prepared by *STRUCTURAL ENGINEER.

D. Construction Means, Methods, Techniques, Sequences and Procedures:
1. The Contractor is solely responsible for, and has sole control over, construction means, methods, techniques, sequences and procedures, and for coordinating all portions of the Work.
2. Shoring that is required to complete the Work, is considered a method or technique and is the sole responsibility of the Contractor. If a regulatory agency requires a licensed engineer to design, approve or provide drawings for shoring, then it is the sole responsibility of the Contractor to engage the services of a qualified Engineer for shoring design services.

1.02 RELATED WORK SPECIFIED ELSEWHERE

A. Drawings and general provisions of the Contract, including A-procurement and Contracting Requirements, Division 00 and Division 01 apply to this section.

B. Section 31 11 00 Clearing and Grubbing

C. Section 31 23 33 Trenching, Backfilling and Compaction

D. Section 31 13 13 Concrete Paving

E. Section 31 23 33 Excavation and Fill

F. Contractor shall comply with all current, applicable codes and regulations, including the Uniform Building Code.

G. Contractor shall comply as applicable with Standard Specifications for Public Works Construction, Current Edition, including all City and County Amendments (herein after referred to as "Standard Specifications").

H. Geotechnical Data: Subsurface data is available from the Owner. Contractor is urged to carefully analyze the site conditions.

1.03 PERMITS

A. Prior to commencement of work, the Contractor shall be responsible for obtaining, at the contractors own expense unless otherwise specified in the Contract, Supplementary or General Conditions, all construction permits necessary to complete the site grading according to the plans and specifications.

1.04 APPLICABLE PUBLICATIONS

A. The following specifications of the latest issue listed below, but referred to thereafter by basic designation only, form a part of this specification to the extent required by the references thereto.
   1. Texas Department of Transportation 2004 Standard Specifications for Construction of Highways, Streets and Bridges (TxDOT).
   2. American Society for Testing and Materials (ASTM).
      a. D 698 Laboratory Compaction Characteristics of Soil Using Standard Effort.
      b. D 1556 Density & Unit Weight of Soil in Place by the Sand-Cone Method.
      c. D 1557 Laboratory Compaction Characteristics of Soil Using Modified Effort.
      d. D 4253 Maximum Index Density & Unit Weight of Soils using a Vibratory Table.
      e. D 4254 Minimum Index Density & Unit Weight of Soils in Calculation of Relative Density.
      f. D 2922 Density of Soil and Soil-Aggregate in Place by Nuclear Methods (Shallow Depths)

1.05 PROTECTION OF EXISTING UTILITIES AND ADJACENT WORK

A. Prior to earthwork operations, existing utilities, facilities and permanent objects to remain shall be located and adequately protected. Contractor shall contact the local utility coordinating committee or the utility company involved to locate all public and private utility company lines.

B. If unknown and uncharted utilities are encountered during excavation, promptly notify Owner and the governing utility company when determinable and wait for instructions.

C. For private property utilities found, if it is ascertained by Owner that such utility line has been abandoned, properly cap line at a depth approved by Owner or remove line as directed. All work to cap and remove abandoned public utilities found, must be

coordinated through the governing utility company.

D. If such unknown utilities are encountered and work is continued without contacting the Owner for instructions, and damage is caused to said utilities, Contractor shall repair, at his own expense, such damage to the satisfaction of the Owner and the Utility Company.

E. Refer to Specification section 31 11 00 for other site related items requiring protection.

1.06 DEFINITIONS

A. Excavation consists of the removal of material encountered to subgrade elevations and the reuse or disposal of materials removed.

B. Subgrade: The uppermost surface of an excavation, including excavation for trenches, or the top surface of a fill or backfill immediately below base course, pavement, or topsoil materials.

C. Borrow: Soil material obtained off-site when sufficient approved soil material is not available from excavations.

D. Base Course: The layer placed between the subgrade and surface pavement in a paving system.

E. Unauthorized excavation consists of removing materials beyond indicated subgrade elevations or dimensions without direction by the *Owner's rep. Unauthorized excavation, as well as remedial work directed by the Owner's Rep shall be at the Contractor's expense.

F. Structures: Buildings, footings, foundations, retaining walls, slabs, tanks, curbs, mechanical and electrical appurtenances, or other man-made stationary features constructed above or below ground surface.

G. Unforeseen Excavation: Excavation of material, regardless of its character or nature, below the subgrade elevation required to construct the work as indicated on the drawings or specified herein.

H. Geotechnical Engineer: Person or company contracted by the owner and/or through the architect to provide testing and onsite Geotechnical services during the construction schedule.

1.07 QUALITY ASSURANCE

A. Pre-Excavation Conference: Conduct conference at Project site to comply with requirements in Division 1 Section "Project Meetings."

B. Codes and Standards: Perform earthwork complying with requirements of authorities having jurisdiction.

C. Testing and Inspection Service: Owner will employ a qualified independent geotechnical engineering testing agency to classify proposed on-site and borrow soil materials to verify that soils comply with specified requirements and to perform required field and laboratory testing. Contractor responsible to coordinate with the testing agency prior to start of work requiring testing so as to minimize unnecessary cost or delays to the project.

D. Testing:
1. Owner will retain and pay a qualified Geotechnical engineer to take all field samples and do all laboratory testing necessary to verify compliance of the work to these Specifications or as required by City or other regulatory agencies. The Geotechnical Engineer shall submit results of all testing done during the course of the work to the Owner, Architect, and Contractor.
2. Notify testing lab a minimum of 48 hours in advance of the time testing is required to satisfy requirements of this section.
3. Should testing specified above show work which does not satisfy these Specifications, the Contractor shall pay, through the Owner, for all additional tests required to determine the extent of work that is not satisfactory and for all additional tests necessary to demonstrate compliance with these specifications.
4. All tests shall be performed by the Soil Engineer in accordance with ASTM D 1557, D1556, D2922, D3017, or other test method selected by Geotechnical Engineer.

1.08 SUBMITTALS

A. Samples: Submit samples of all materials used for Architect's approval wherever specified or as directed by the Architect.

B. Shoring and Slope Protection Design:
1. Prior to beginning any excavation, submit certification to the Architect that the proposed shoring and slope protection system has been accepted and approved by all governing jurisdictions. Certification shall be signed and sealed by the engineer of record for the shoring design.
2. Provide signed letter from the Geotechnical Engineer stating that the proposed design complies with the recommendations of geotechnical reports.

PART 2 - PRODUCTS

2.01 SOIL MATERIALS

A. Fill materials and sources must be approved by the Owner. The Contractor is responsible for providing adequate samples and testing results to the Owner for testing

and approval.

B. Select fill per 2.2 shall be used beneath all site retaining walls and site structures where fill material is required to achieve the grades and elevations on the plans.

C. General fill per 2.3 material shall be used for fill in landscaping areas not supporting structures. Topsoil per 2.4 shall be spread over landscape areas as needed.

D. Fill material beneath paving can be per 2.2 and 2.3. Regardless of the fill material used, subgrade treatment shall be chemically stabilized for the thickness specified and detailed in the drawings.

E. Material excavated onsite may be used as fills, with prior Geotechnical Engineer approval.
   1. Site Materials:
      a. Onsite fill materials shall be free of organic or deleterious products.
      b. Moisture content of existing soils may require adjustment for compaction approval.

2.02 SELECT FILL

A. The select fill shall consist of sandy clay, lime stabilized clays or clean sand, uniformly graded and free of objectionable material. ***[COORD WITH GEOTECHNICAL REPORT AND REVISE PREVIOUS SENTENCE AS NEEDED. THEN DELETE 1, 2, AND/OR 3 AS NEEDED TO MEET PROJECT INTENT. WE TYPICALLY DO NOT WANT SAND BENEATH PAVEMENT AT ANY TIME BUT THERE COULD BE REASONS THAT IT IS NEEDED ON THE PROJECT]
   1. Sandy Clay Fill: Sandy clay fill shall have a plasticity index between 10 and 20. The fill materials shall be placed in loose lifts not exceeding eight (8) inches in height and compacted to 95 percent of Standard Maximum Density at the proper moisture content for that soil type as defined by ASTM D 698.
   2. Lime Stabilized Clay Fill: Lime clays may be stabilized in place or mixed with lime at another location on the site and placed and compacted. Lime stabilization shall be performed in accordance with Section 31 32 13.19 "Lime Stabilization". The percent of lime to be used shall be determined by the testing laboratory at the source prior to acceptance of the material for fill. The material shall be placed in loose lifts not exceeding eight (8) inches in thickness and compacted to 95 percent of Standard Maximum Density at the proper moisture content for that soil type as determined by ASTM D 698.
   3. Clean Sand Fill: Clean sand fill is defined as having less than 12 percent passing the No. 200 sieve and less than 12 percent retained on the No. 10 sieve and having a plasticity index below 10. Clean sand fill should be placed in loose lifts 12 inches thick and compacted using vibratory equipment to at least 80 percent relative density as determined by ASTM D 4253 and ASTM D 4254 or other equivalent test method. Where determined necessary by the Owner's testing laboratory or Geotechnical

engineer, cement stabilization will be required. [DO NOT USE DIRECTLY BENEATH PAVEMENT AT ANY TIME. CLEAN SAND IS TYPICALLY NOT DESIRED IN AREAS WHERE THE UNDERLYING SOILS ARE EXPANSIVE CLAYS OR OTHER MATERIALS THAT MOISTURE WOULD CAUSE TO MOVE OR LOOSE SRTENGTH. DO NOT INCLUDE UNLESS COORDINATED WITH THE GEOTECH AND SRTUCTURAL ENGINEER. DO NOT USE DIRECTLY BENEATH PAVEMENT AT ANY TIME.]

2.03 GENERAL FILL

A. General fill material shall be used for fill in landscaping areas not supporting structures, but may be used beneath pavement where approved by the Engineer. General fill material may be any native soil free of debris, trash, rocks over 2 inches in diameter and other objectionable material. General fill shall be placed and compacted in lifts not exceeding 12" in thickness to 95 percent standard density as defined by ASTM D 698. Where called for by the plans or by the landscape specifications, the fill shall be kept sufficiently low to accommodate the proper depth of topsoil and related sod or other vegetation.

2.04 TOPSOIL

A. Topsoil material shall be native earthen material suitable for growth of vegetation such as silty and sandy loams. The site stripings may be used as topsoil unless otherwise dictated by the Owner. Topsoil shall be spread over landscape areas to a depth of 4 to 6 inches and compacted to 85 percent of standard density ASTM D 698. Stockpiling of Topsoil may not exceed 6 feet in height.

2.05 SPECIAL DRAINAGE MEDIA

A. All Retaining Wall backfill material shall be clean open-graded crushed rock or gravel, maximum 3/4" particle size in accordance with the Standard Specifications and detail in the geotechnical report.

B. Drainage Fabric: Nonwoven geotextile, specifically manufactured as a drainage geotextile; made from polyolefins, polyesters, or polyamides; and with the following minimum properties determined according to ASTM D 4759 and referenced standard test methods:
1. Grab Tensile Strength: 110 lbf; ASTM D 4632.
2. Tear Strength: 40 lbf; ASTM D 4533.
3. Puncture Resistance: 50 lbf; ASTM D 4833.
4. Water Flow Rate: 150 gpm per sq. ft.; ASTM D 4491.
5. Apparent Opening Size: No. 50; ASTM D 4751.

C. Approved Materials
1. Mirafi 140 filter fabric;
2. or acceptable substitution.

PART 3 - EXECUTION

3.01 PREPARATION

A. Inspection:
1. Prior to performing the work of this Section, carefully inspect the installed work of all other trades and verify that all such work is complete to the point where work may properly commence.
2. Verify that work may proceed in complete accordance with the design.

B. Discrepancies:
1. In the event of discrepancy, immediately notify the Engineer.

C. General:
1. Use all means necessary to control dust on or near the site resulting from the performance of the Work. Thoroughly moisten all surfaces to prevent dust being a nuisance to the public, adjacent uses, and concurrent work on site. Moisture level during compaction operations shall not exceed that amount as specified by Geotechnical Engineer.
2. Verify existing grades and dimensions before starting any grading operations. If any discrepancy exists, notify Architect immediately.
3. Use all means necessary to protect all existing features, products, or items designated to remain, as well as all work of this Section. In the event of damage, repair or replace immediately to the approval of and at no additional cost to the Owner.
4. Protect and maintain existing benchmarks throughout the course of the work. Reestablish monuments or stakes disturbed or destroyed during the course of the Work at no additional expense to the Owner.
5. Conduct work so as to avoid injury to persons and damage to adjacent property. Provide appropriate shoring, bracing and barriers, including light when necessary.
6. Coordinate operations with, and provide access to, the Geotechnical Engineer or designated representative during demolition and construction for purposes of testing, investigation and inspection.

D. Preparation:
1. Protect structures, utilities, sidewalks, pavements, and other facilities from damage caused by settlement, lateral movement, undermining, washout, and other hazards created by earthwork operations.
2. Provide erosion-control measures to prevent erosion or displacement of soils and discharge of soil-bearing water runoff or airborne dust to adjacent properties and walkways.
3. Protect subgrade from excessive drying or excessive moisture.

3.02 EXCAVATION

A. General - Contractor shall complete all excavation required regardless of the variations in hardness, type, or density of materials encountered, to the dimensions and elevations shown on the drawings. When unsatisfactory material is uncovered, that material shall be removed and replaced with select fill, the extent of such excavation to be directed by the Owner. Unsatisfactory material shall be removed to the stockpile area or from the site as directed by the Owner. Payment for over excavation directed by Owner shall be paid as directed in Division 01 Specifications

1. Unclassified Excavation: Excavation is unclassified and includes excavation to subgrade elevations regardless of the character of surface and subsurface conditions encountered, including rock, soil materials, and obstructions.
   a. If excavated materials intended for fill and backfill include unsatisfactory soil materials and rock, replace with satisfactory soil materials.
   b. Remedial work due to over-excavation including provision of suitable and stable backfill meeting the degree of compaction required shall be at the Contractor's expense.
2. Borrow Material: If excavated materials of a suitable nature are not of sufficient quantity to complete the work, contractor may provide borrow material in sufficient quantity to complete the work at Owner's approval at no additional cost to the Owner.
3. Disposing of Excavated Material: Dispose of excess satisfactory soil material and all unsatisfactory soil material and rock obtained from excavations in accordance with the provisions of this Section.

B. Excavation for Pavement

1. The material exposed after excavation shall be scarified to a depth of six (6) inches and compacted to at least 95 percent of Standard (ASTM D 698) Maximum Density within **minus 3 to plus 5 ** percent of optimum moisture content of the soil. ***Where necessary to achieve the required compaction, stabilization methods as outlined in paragraph 3.2.B.4 of this specification shall be used. [***IF STABILIZATION IS ALWAYS TO BE REQUIRED, OMIT "WHERE NECESSARY"]
2. Excavation required beneath pavement sections shall comply with elevations and dimensions shown on the plans and detailed sections within a tolerance of plus or minus 0.10 foot. Contractor shall take care not to disturb areas that are designated to be protected or are outside the construction limits. Excavated areas shall be kept free of ground and surface water.

C. Cut Slopes and Ditches

1. Slopes and grades of ditches shall conform to the plans within a tolerance of plus or minus 0.10 foot. No exposed slopes shall be steeper than three feet horizontal to one foot vertical. Where slope protection is specified or called out on the plans, said protection shall be placed as soon as practical, after exposing the slope.

3.03 FILL AND BACKFILL

A. Placement

1. Fill material shall be placed in loose lifts not exceeding eight (8) inches for areas beneath site structures and pavement, and twelve (12) inches for landscape areas not supporting structures. Fill areas shall be compacted to 95 percent of Standard Maximum Density at the proper moisture of that soil as defined by ASTM D 698.
2. Each lift shall be thoroughly compacted and shall have obtained satisfactory density prior to proceeding with the next lift.
3. The top six (6) inches of material beneath vehicular pavement shall be stabilized after placement as shown in the details.
4. Material shall be free of trash and rocks over three (3) inches in diameter.
5. Fill shall be brought up to the proper elevations as determined from the lines, grades, sections and elevations shown on the plans.

B. Site Retaining Wall/Structure Backfill:
1. Place granular material as engineered backfill at all building and site retaining walls.
2. For precast site retaining walls, install specified gravel and filter fabric prior to backfill installation. Position according to manufacturers recommendations
3. Place in accordance with applicable portions of the Standard Specifications.
4. Compact per approved methods, using hand operated compaction equipment. Compact to at least 90% per ASTM D1557.

C. Compaction and Finishing
1. Suitable compaction equipment commonly used to meet the requirements for this type of compaction work should be used.
2. The finished surface shall be reasonably smooth, compacted, and free from irregular surface changes. The surface grade shall be consistent with the drainage intent shown on the plans such that no unwanted ponding shall occur.
3. Surface shall not be more than 0.10 feet above or below the established grade, and all ground surfaces shall vary uniformly between indicated grades.
4. Cut material from the site may be used for fill material if approved by Owner. Where cut material is used as fill, each lift of such material shall be properly mixed to obtain a uniform material, with clay being the predominant material when mixed with silt, maintaining a plasticity index less than 20.
   a. Lime stabilization shall be used for clay material and shall conform to Section 31 32 13.19 - Lime Stabilization.
   b. Cement stabilization shall be used for sandy or silty materials and shall conform to Section 31 32 13.16 - Cement Stabilization.

3.04 EROSION & PROTECTION

A. There shall be at all times adequate protection to newly graded areas to prevent soil erosion as provided in Section 31 25 13, Erosion and Sedimentation Control.

B. Soil erosion that occurs prior to acceptance of the work shall be repaired at no expense to the Owner.

C. Protecting Graded Areas: Protect newly graded areas from traffic, freezing, and erosion.

Keep free of trash and debris.

D. Repair and reestablish grades to specified tolerances where completed or partially completed surfaces become eroded, rutted, settled, or where they lose compaction due to subsequent construction operations or weather conditions.
1. Scarify or remove and replace soil material to depth as directed by Owner's Testing and Inspection Service; reshape and re-compact.

E. Where settling occurs before Project correction period elapses, remove finished surfacing, backfill with additional soil material, compact, and reconstruct surfacing.
1. Restore appearance, quality, and condition of finished surfacing to match adjacent work, and eliminate evidence of restoration to the greatest extent possible.

3.05 GRADING

A. Rough Grading
1. Cut and fill shall be left sufficiently high to require cutting by fine grading.
2. Grade to subgrade depths required for construction of finished surface materials and for controlled internal drainage of site.

B. Fine Grading
1. Fine grading shall conform to elevations required to insure finished elevations as indicated on the drawings.
2. Provide a smooth transition between adjacent existing grades and new grades.

C. Slope grades to direct water away from buildings and to prevent ponding at a minimum of 5% grade for the initial 20 feet, as shown on the drawings or as directed by architect. Maximum cross slope for all walkways shall be 2% for disabled access. Finish subgrades to required elevations within the following tolerances:
1. Lawn or Unpaved Areas: Plus or minus 0.1 foot (1.2 inches)
2. Walks: Plus or minus ½ inch
3. Pavements: Plus or minus ½ inch

3.06 TESTING AND INSPECTION

A. Testing of Materials and Installed Work
1. Materials and installed work require testing to show that the specifications for the materials and work have been met. The Owner may, at the Owner's expense, take random tests on materials and installed work. The Contractor shall allow free access to material stockpiles and facilities at all times. In fill areas each lift must be tested and approved before proceeding on the next lift. Tests, not specifically indicated to be done at Owner's expense including the retesting of rejected materials and installed work, shall be done at the Contractor's expense.
a. Testing to be provided by Owner

i. All tests
ii. Testing to be provided by Contractor
i. All retesting for areas failing the first test.

2. Contractor shall notify Owner's testing laboratory **24 hours** in advance of beginning any earth work operations and coordinate testing schedules to meet these specifications.

B. Maximum density tests per ASTM D 698 shall be taken on all fill materials at a rate of one test for each type of soil to be used and at least one test for every 1000 cubic yards of fill.

C. Field density tests per ASTM D 1556 or ASTM D 2922 shall be taken on all fill material at a rate of one test for every 10,000 square feet and at least one test per lift.

D. All imported fill material shall be approved prior to importing.

3.07 DUST ABATEMENT

A. The Contractor shall comply with applicable Federal, State, and local laws and regulations concerning the prevention and control of dust pollution.

B. During the performance of the work required by these specifications or any operations appurtenant thereto, whether on right-of-way provided by the Owner or elsewhere, the Contractor shall furnish all the labor, equipment, materials, and means required, and shall carry out proper and efficient measures wherever and as often as necessary to reduce the dust nuisance, and to prevent dust which has originated from the contractor's operations from damaging crops, orchards, cultivated fields, and dwellings, or causing a nuisance to persons. The Contractor will be held liable for any damage resulting from dust originating from the contractor's operations under these specifications.

C. Dust Control shall be accomplished by one of the following methods:
1. Whenever ordered by the Owner, the Contractor shall furnish and distribute over the traveled road surfaces, which have not yet been fully restored, an application of Calcium Chloride. The material used shall be Regular Flake Calcium Chloride having a minimum chemical content of Calcium Chloride of 77%. Unless otherwise specified or ordered by the Owner, rate of application shall be three (3) pounds per square yard of surface covered.
2. Whenever ordered by the Owner, the Contractor shall apply on traveled road surfaces "Bituminous Surface Treatment" in accordance with the current Texas Standard Specifications for Construction of Highways, Streets and Bridges.

D. The cost of sprinkling or of other methods of reducing formation of dust shall be included in the prices bid in the schedule for other items of work.

3.08 STORAGE OF SOIL MATERIALS

A. Stockpile borrow materials and satisfactory excavated soil materials. Stockpile soil

materials without intermixing. Place, grade, and shape stockpiles to drain surface water. Cover to prevent windblown dust.

1. Stockpile soil materials away from edge of excavations. Do not store within drip line of remaining trees.
2. Stockpile Topsoil may not exceed 6 feet in height.

3.09 FIELD QUALITY CONTROL

A. General:

1. Testing shall be the responsibility of the Owner and costs of initial testing shall be paid by Owner. Cost of all subsequent testing necessary due to non-compliance with specifications shall be paid by Contractor.

B. Density Test:

1. Density tests shall be performed by an approved commercial testing laboratory approved per ASTM D 1557.
2. Tests shall be performed in accordance with the referenced Standards.
3. Field and laboratory tests for moisture-density relations shall be determined in accordance with ASTM D 1557. The frequency and location of field density tests will be determined by the Geotechnical Engineer.
4. Trenches improperly compacted shall be reopened to the depth directed, then refilled and compacted to the density specified at no additional cost to the Owner.

3.10 DRAINAGE CONTROLS

A. Provide all necessary temporary apparatus, pumps, curbs or ditches as required to divert or convey water from any source away from the Work. Do not allow water from any source to accumulate within or damage earthwork.

END OF SECTION

SECTION 31 23 33

EXCAVATION, TRENCHING AND BACKFILL

PART 1 - GENERAL

1.01 DESCRIPTION

A. The work to be performed under this Specification shall consist of furnishing all labor, equipment and materials and performing all operations in connection with the excavating, trenching, and backfilling for pipelines as shown on the plans and as specified herein.

1.02 MEASUREMENT AND PAYMENT

A. All trench excavation, backfill and compaction are not considered pay items. Payment for these items shall be included in the unit price laid in the Proposal for each size of pipe at their respective depths. This unit price shall be full remuneration for performing the trench and backfill complete including grading, bell holes, sheeting, dewatering, tamping, and water soaking; and including the furnishing of sewer pipe, all equipment, labor, materials, power, teams, tools, and transportation necessary or incidental thereto; but not including tunneling, or boring, all of which will be paid for extra.

PART 2 - PRODUCTS

2.01 MATERIALS

A. Materials for pipe embedment will meet TCEQ Regulations for depth of bury and class of pipe and installed per City of Midland Standard Specifications.

B. Concrete (For encasement or blocking) See SECTION 033000 - CONCRETE. Material shall conform to ASTM C94. The compressive strength of the concrete shall be at least 2,000 psi and shall contain at least four (4) sacks of cement per cubic yard.

C. Cement stabilized sand. See SECTION 312 23.53 – CEMENT STABILIZED SAND BACKFILL.

2.02 TESTING REQUIREMENTS

A. Compaction tests for all backfill may be required for every 200 linear feet of trench and for each twelve-inches (12”) vertically. Density tests, shall be measured as one unit for each test. The Owner shall pay for Geotechnical tests ordered that meet the requirements of the plans and specifications. Failed tests shall be charged to the Contractor. Refer to City Standard Trench Detail for compaction effort requirements.

PART 3 - EXECUTION

3.01 CONSTRUCTION METHODS

A. CONTROL OF WATER

Provide sufficient pumping equipment, in good working order, available at all times to remove any water that accumulates in excavations. When the excavation crosses a drainage pathway, the contractor shall provide for means of alternate drainage. The discharge of dewatering equipment shall not cause damage to private or public property.

B. SHEETING, SHORING, AND BRACING

See SECTION 312334 – TRENCH SAFETY.

In caving ground, or in wet, saturated, or flowing materials, the contractor shall sheet, shore, or brace the sides of the trench so as to maintain the excavation properly in place. When excavations are made adjacent to existing building or other structures or in paved streets, particular care must be taken to adequately sheet, shore, and brace the sides of the excavation to prevent undermining of, or settlement beneath, the structures or pavement. Underpinning of adjacent structures or pavement shall be done by the Contractor at his own cost and expense, in a manner satisfactory to the Engineer and when required by the Engineer. The pavement shall be removed, the void satisfactorily refilled and compacted, and the pavement replaced by the Contractor. The entire expense of such removal and subsequent replacement thereof shall be borne by the Contractor. Sheeting, shoring, and bracing shall not be left in place, unless otherwise provided for in the contract or authorized by the Engineer. The removal of sheeting, shoring and bracing shall be done in such a manner as not to endanger or damage either new or existing structure, private or public properties, and so as to avoid cave-ins or sliding of the banks. All holes or voids left by the removal of the sheeting, shoring, or bracing shall be immediately and completely filled and compacted with suitable materials.

C. GUARANTEE

1. Guarantee the backfilling of excavation and trenches against settlement for a period of one (1) year after the final completion of the contract under which the work is performed.
2. Make all repairs or replacements made necessary by settlement, including refilling, compacting, and reseeding or re-sodding the upper portion of the ditch and repairing broken or settled pavements, driveways, and sidewalks within five (5) days after notice from the Engineer.

D. PREPARATION

1. Site Preparation. Prepare the construction site for construction operations by removing and disposing of all obstructions and objectionable materials in accordance with contract documents.
2. Alignment, Grade and Minimum Cover

a. General. The water and sewer mains shall be laid and maintained to lines and grades established by the plans and specifications with fittings, valves, hydrants, manholes and clean-outs at the required locations, unless otherwise pre-approved by the Engineer. Valve-operating stems shall be oriented in a manner to allow proper operation. Hydrants shall be installed plumb.
b. Cut sheets shall be provided to the City's Inspector. The contractor shall determine the alignment and grade or elevation of the pipeline from offset stakes. Offset stakes shall be placed every 100 feet. The contractor shall also provide a continuous chalk line along the alignment of the trench for use by the operator of the excavating equipment. The contractor shall provide a laser beam and grade pole to assist in grading the ditch to the proper elevation.
c. Should the ditch be graded below the required elevation, bring subgrade to the required elevation with cement stabilized sand or rounded pea gravel. The use of excavating materials for this application will not be allowed.
d. Where pipe grades or elevations are not definitely fixed by contract drawings, trenches shall be excavated to a depth sufficient to provide a minimum depth of backfill cover over the pipe. Greater pipe cover depths may be necessary for clearance beneath existing pipes, conduits, drains, drainage structures, or other obstructions encountered at normal pipe grades. Measurement of pipe cover depth shall be made vertically from the outside top of pipe to finished ground or pavement surface elevations.

3. Prior Investigation. Prior to excavation, investigation shall be made to the extent necessary to determine the location of existing underground structures and conflicts. Care should be exercised by the Contractor during excavation avoid damage to existing structures.
4. Unforeseen Obstructions. When obstructions that are not shown on the plans are encountered during the progress of work and interfere so that an alteration of the plans is required, the Engineer will alter the plans or order a deviation in line and grade or arrange for removal, relocation or reconstruction of the obstructions.
5. Clearance. When crossing existing pipelines or other structures, alignment and grade shall be adjusted as necessary, with the approval of the Engineer, to provide clearance as required by federal, state or local regulations or as deemed necessary by the Engineer to prevent future damage or contamination of either structure.

E. EXCAVATION

All excavation shall meet the most current OSHA regulations.

1. Classification. Excavation of trenches for pipelines is unclassified. Soils will be classified utilizing OSHA Standards and Regulations. The Contractor shall assume that the site contains the worse type of soils and make provisions for shoring the work area.
2. Trench Excavation
   a. General. The trench shall be excavated to the required alignment, depth and width and in conformance with all federal, state and local regulations for the protection of the workmen.
   b. Trench Preparation
      i. Trench preparation shall proceed in advance of pipe installation for only as far as pipe will be laid that day.

ii. The contractor shall keep the trench dry from both storm water and seepage from the sides of the trench. Discharge from any trench dewatering pumps shall be conducted to natural drainage channels, storm sewers or a preapproved reservoir. Do not discharge into any municipal sewer system without municipal approval. The contractor shall be responsible for cleaning any storm drain system, which was used for dewatering discharge.

iii. Excavated material shall be placed in a manner that will not obstruct the work nor endanger the workmen, obstruct sidewalks, driveways, or other structures and shall be done in compliance with federal, state, or local regulations.

3. Pavement Removal. Removal of pavement and road surfaces shall be a part of the trench excavation, and the amount removed shall depend upon the width of trench required for installation of the pipe and the dimensions of area required for the installation of valves, hydrants, specials, manholes or other structures. The dimensions of pavement removed shall not exceed the dimensions of the opening required for installation of pipe, valves, hydrants, specials, manholes and other structures by more than twelve (12") inches in any direction, unless otherwise required or pre-approved by the Engineer.
4. Width. See City Standard Bedding and Trench Detail.
5. Bell Holes. Holes for the bells shall be provided at each joint, but shall be no larger than necessary for joint assembly and assurance that the pipe barrel will lie flat on the trench bottom. Other than noted previously, the trench bottom shall be true and even in order to provide support for the full length of the pipe barrel, except that a slight depression may be provided to allow withdrawal of pipe slings or other lifting tackle.
6. Subgrade in Earth
   a. Where a firm and stable foundation for the pipe can be obtained in the natural soil, and where special embedment is not shown on the plans, or specified herein, carefully and accurately trim the bottom of the trench to fit the lower portion of the pipe barrel. The bottom of the trench shall be firm, stable and free of standing water.
   b. If water is allowed to collect in an originally dry trench after a reasonable time has passed to complete the embedment of the pipe, as determined by the Engineer, the contractor shall place a minimum of four (4") inches of clean rounded pea gravel in the ditch and pump out all accumulated water before placing the pipe. No deleterious materials will be allowed in the gravel. No extra compensation will be allowed for this work.
   c. Where wet, soft, or spongy material is encountered in the excavation at subgrade level, the contractor shall remove such material at the direction of the Engineer and replace it with crushed stone of sufficient quantity such that when fully compacted, the subgrade is firm and stable.
7. Subgrade in Rock
   a. When excavation of rock is encountered, all rock shall be removed to provide a clearance of at least six (6") inches below and on each side of all pipe, valves and fittings for pipe sizes twenty-four (24") inches or smaller, and nine (9") inches for pipe sizes thirty (30") inches and larger. When excavation is completed, the

proper embedment material shall be placed on the bottom of the trench to the previously mentioned depths, leveled and tamped.

b. These clearances and bedding procedures shall also be observed for pieces of concrete or masonry and other debris or subterranean structures, such as masonry walls, piers or foundations that may be encountered during excavation.
c. The installation procedures specified in this section shall be followed when gravel formations containing loose boulders greater than eight (8") inches in diameter are encountered.
d. In all cases, the specified clearances shall be maintained between the bottom of all pipe and appurtenances and any part, projection or point of rock, boulder or stones of sufficient size and placement, which, in the opinion of the Engineer, could cause a fulcrum point.

F. CONCRETE ENCASEMENT

The Contractor shall place 2,000 psi concrete encasement under and around pipe as shown on the embedment detail, and provide necessary anchors to prevent the pipe from floating out of place. The contractor shall remove and relay any pipes that are floated out of proper position.

G. BACKFILLING

1. General
   a. The Contractor shall not begin backfilling until approval has been obtained from the Inspector. Backfilling includes refilling and consolidation of the fill in trenches and excavations up to the natural ground surface or road grade.
   b. Backfill shall be accomplished in accordance with the specified laying condition as shown on the plans.
2. Backfill Material
   a. All backfill material shall meet latest edition of ASTM D2321 unless otherwise specified by the Engineer.
   b. If excavated material is indicated on the drawings or specified for backfill, and there is a deficiency due to a rejection of part thereof, the contractor shall provide the required amount of sand, gravel or other pre-approved material.
3. Do not leave trenches open overnight without backfilling to the natural ground level. Steel plates (1/2" in thickness) may be used to cover open trenches only with the approval of the Engineer.
4. Compaction. Compaction requirements are as specified on the plans.

END OF SECTION

SECTION 31 23 34

TRENCH SAFETY

PART 1 - GENERAL

A. This Section is intended to provide specifications for the minimum requirements for trench safety. The Contractor shall endeavor to insure the safety of their employees working in and around trenches and other excavations in accordance with current Occupation and Safety Health Administration (OSHA) standards and in particular, Excavations, Trenching and Shoring, Federal OSHA Standards, 29 C.F.R. part 1926, Subpart P, as amended including Final Rule, published in Federal Register Vol. 54, No. 209 Tuesday October 31, 1989 and latest amendment thereto. These specifications outline minimum standards of construction safety to be followed, but should not be construed as the means, methods and operations of construction. Where the Contractor deviates from these outlined minimum standards, the Contractor is required to submit for approval by the Owner sealed engineering plans designed by a Registered Professional Engineer in the State of Texas showing the proposed method of trench protection. A copy of the approved design shall be kept at the site.

1.01 SCOPE OF WORK

A. For all trenches in excess of five (5) feet of depth or for all trenches less than five (5) feet of depth in soils which will not stand up in vertical excavations, the Contractor shall either lay back the sides of the excavation, provide sheeting and shoring to hold the walls of the excavation in place, or use a trenching box meeting or exceeding the protection provided by the sheeting and shoring system. Trenches are defined by a horizontal width less than 15 feet. In all cases the method of trench wall protection shall be in conformance with the plans, details, and specifications. Alternate methods suggested by the Contractor for trench wall protection must be designed and sealed by a Registered Professional Engineer. Owner's approval to use an alternate Engineer's design shall be permission to deviate from the specifications only and shall not be construed in any way to mean approval of the specific design, means or method of construction. The Contractor shall assume full responsibility for the system design the contractor uses, including those options presented in the contract documents and in these specifications.

B. If an Owner's representative determines trench safety methods are unsafe, they can stop construction until conditions are corrected.

C. Any construction not in accordance with OSHA regulations may not be eligible for payment, and any delays in construction to bring the project within OSHA regulations will not be the responsibility of the Owner or the Engineer.

1.02 RELATED WORK SPECIFIED ELSEWHERE

A. Section 31 22 13 Site Grading

B. Section 31 23 33 Trenching, Backfilling and Compaction

C. Section 33 10 00 Water Distribution System

D. Section 33 30 00 Sanitary Sewer

E. Section 33 40 00 Drainage

PART 2 - PRODUCTS

A. Materials used for sheeting, sheet piling, cribbing, bracing, shoring, underpinning, and other structural retaining systems shall be in good serviceable condition, of good quality, of a suitable condition and grade to perform the intended use. Wood shall be sound, free from large or loose knots, and of the proper dimensions. The Contractor shall be responsible for maintaining the systems in a manner consistent with the intended design and in a manner that will prevent exposure of workers to hazards.

PART 3 - EXECUTION

3.01 GENERAL SAFETY REQUIREMENTS

A. The work area shall be kept free of hazards to the employees. All surface encumbrances which may create a hazard shall be removed, supported or otherwise isolated as necessary to safeguard employees.

B. The Contractor shall take special precautions to locate existing utilities and to protect those systems as required. The Contractor shall call the Utility Coordinating Committee as required 24 hours prior to excavating around existing utilities.

C. The Contractor shall provide safe access and egress to excavations. Ramps or stairways shall be structurally sound and capable of providing a safe means of escape from the excavation. Trenches in excess of four (4) feet in depth shall have a safe means of egress from the trench spaced such that no more than 25 feet of lateral travel would be required to reach the egress system.

D. The employees shall be protected from work place hazards such as vehicular traffic, falling loads, and hazardous atmosphere. Excavations shall be marked so that employees and equipment are clearly warned of the location of the excavations. Trenches shall be kept free of water accumulations that would present a hazard to employees. Adjacent structures shall be stabilized as necessary so as not to present a possible hazard to the employees. Equipment shall be kept sufficiently clear of excavations so as not to create a potential overburden stress to trench walls causing cave-ins. Safe access shall be provided with handrails where access over trenches is required.

E. Emergency rescue equipment as required by OSHA shall be readily available at the site and shall be maintained to good working condition.

F. Daily inspections of excavations, the adjacent areas, and the protective systems shall be made by a person or persons competent to make such inspections to keep the Contractor notified of unsafe conditions so that necessary precautionary actions can be taken.

3.02 TRENCH WALL LAYBACK

A. GENERAL

In areas where no pavement or other structural elements are to be constructed, the sides of the trenches over five (5) feet deep may be sloped to provide protection from cave ins. If written approval is given by the Owner, trenches beneath pavement or other structures may also be laid back. Backfill for laid back trenches shall be as provided for a vertical wall trench for the full width of the excavation.

B. LAYBACK SLOPE REQUIREMENTS

1. The Contractor shall be responsible for providing the proper lay back slopes for all soil conditions encountered. Where soils data is provided for the Contractor's use, that information is intended as a sampling of the types of soils materials that may be encountered; however, the Contractor shall be diligent in observing the actual soil conditions as the work proceeds and shall be responsible for providing a safety system adequate to meet the minimum standards for the actual types of soils encountered. Special precautions shall be taken to monitor conditions when working in fill areas, areas subject to surcharge and areas exposed to vibrations from nearby equipment and machinery.
2. At the Contractor’s option where a layback trench system is approved for use, the Contractor may layback the sides of the trench at a slope of one and one-half (1-1/2) feet horizontal to one (1) foot vertical without testing for the soil’s stability. When this method is used, it does not preclude the removal of unsuitable materials encountered and replacement with suitable materials. This method shall not be used in unsuitable soils such as wet sands, silts, peat or in other areas which require special procedures, equipment and materials.
3. The Contractor may engage a competent person in the means of soil classification to determine the soil classification as a means of reducing the trench wall slopes. Layback slopes may be sloped up to the maximum allowable slopes as follows for the given types of soil.

MAXIMUM ALLOWABLE SLOPES

Soil Materials	For Excavations Less than 20 Feet Deep [c] Slope H:V
Stable Rock	Vertical (90°)
Type A-[b]	3/4:1 (53°)

Type B	1:1 (45°)
Type C	1 1/2:1 (34°)

Notes:

a. Numbers shown in parentheses next to maximum allowable slopes are angles expressed in degrees from the horizontal. Angles have been rounded off.
b. A short-term maximum allowable slope of 1/2H:1V (63°) is allowed in excavations in Type A soil that are 12 feet (3.67 m) or less in depth. Short-term maximum allowable slopes for excavations greater than 12 feet (3.67 m) in depth shall be 3/4H:1V (53°).
c. Sloping or benching for excavations greater than 20 feet deep shall be designed by a registered professional engineer.

4. The types of soil given in paragraph 3.2.B are defined as follows:
   a. Stable Rock - Natural solid mineral matter that can be excavated with vertical sides and remain in tract while exposed.
   b. Type A - Cohesive soils with an unconfined compressive strength of 1.5 tons per square foot or greater. Examples of cohesive soils are: clay, silty clay, sandy clay, clay loam and in some cases, silty clay loam and sandy clay loam cemented soils such as caliche and hard pan are also considered Type A. However, no soil is Type A if:
      i. The soil is fissured.
      ii. The soil is subject to vibration from heavy traffic, piling driving, or similar effects.
      iii. The soil has been previously disturbed.
      iv. The soil is part of a sloped, layered system where the layers dip into the excavation on a slope of four horizontal to one vertical or greater.
      v. The soil is subject to other factors that would require it to be classified as a less stable material.
   c. Type B - Soil that meets one of the following:
      i. Cohesive soil with an unconfined compressive strength greater than 0.5 tons per square foot, but less than 1.5 tons per square foot.
      ii. Granular cohesionless soils including: angular gravel, silt, silt loam, sandy loam and in some cases, silty clay loam and sandy clay loam.
      iii. Previously disturbed soils except those which would otherwise be classified as Type C soil.
      iv. Soil that meets the unconfined compressive strength or cementation requirements for Type A, but is fissured or subject to vibration.
      v. Dry rock that is not stable.
      vi. Material that is part of a sloped, layered system where the layers dip into the excavation on a slope less steep than four horizontal to one vertical, but only if the soil would otherwise be classified as Type B.
   d. Type C - Soil that meets one of the following:
      i. Cohesive soil with an unconfined compressive strength of 0.5 tons per square foot or less.
      ii. Granular soils including: gravel, sand and loamy sand.
      iii. Saturated or submerged soil.

iv. Submerged rock that is not stable.
v. Soil in a sloped, layered system where the layers dip into the excavation on a slope of four horizontal to one vertical or greater.

5. Unconfined compressible strength shall mean the load per unit area at which a soil will fail in compression. It can be determined by laboratory testing, estimated in the field using a pocket penetrometer, or other previously approved methods.
6. Wet soil shall mean soil that contains significantly more moisture than moist soil, but in such a range of values that cohesive material will slump or begin to flow when vibrated. Granular material that would exhibit cohesive properties when moist will lose those cohesive properties when wet.
7. Layered systems shall be classified in accordance with its weakest layer; however, each layer may be classified individually where a more stable layer lies under a less stable layer.
8. Previously classified material whose properties, factors, or conditions affecting its classification change in any way shall be reclassified as necessary and changes to the trench safety plan shall be accomplished before continuing any work in or near the trench where there may be potential danger to workers due to trench failure.
9. The slope of a laid back trench wall shall be less steep than the maximum allowable slope when there are signs of distress. The maximum allowable slope for a material in distress shall be 1/2 horizontal to one vertical or less steep than the maximum allowable slope for the material in a non-distressed condition. Distress shall mean a condition in which a cave-in is imminent or likely to occur.
10. When surcharge loads from adjacent structures, stored material or equipment, operating equipment, or traffic are present, a competent person shall determine the degree to which the actual slope must be reduced below the maximum allowable slope, and shall assure that such a reduction is achieved.
11. An adequate means of exit such as a ladder or steps shall be provided and located so as to require no more than 25 feet of lateral travel to exit the trench.

3.03 TIMBER SHORING

A. GENERAL

Timber shoring may be used as a means of trench protection from cave-ins in trenches that do not exceed 20 feet in depth. The timber shoring system may be used in lieu of sloping and benching systems, or in conjunction with those systems. Good judgment shall be used by the Contractor in selecting the proper system when alternative designs are given.

B. SOIL CLASSIFICATION

The timber shoring system designs are subject to soil classifications outlined in 3.2.B.4 of this section. Classification shall be conducted by a competent person using the proper means and methods of classification as described in this section.

C. BASIS AND LIMITATIONS

1. Dimension of Timber Members
   a. The sizes of the timber members shown in the details are taken from the National Bureau of Standards (NBS) report, "Recommended Technical Provisions for

Construction Practice in Shoring and Sloping of Trenches and Excavations." In addition where NBS did not recommend specific sizes for members, member sizes are based upon an analysis of the sizes required for use by existing codes and an empirical practice.

b. The required dimensions of the members listed in the tables refer to actual dimensions and not nominal dimensions of the timber.

2. Limitation of Application
   a. It is not intended that the timber shoring specification apply to every situation that may be experienced in the field. This data was developed to apply to situations that are anticipated to be present at the site. Where the system provided does not meet the requirement of the actual conditions in the field, the Contractor shall either notify the Owner of the situation and present an engineered solution designed and sealed by the Registered Professional Engineer, or shall notify the Owner of the unanticipated conditions and await instructions.
   b. When any of the following conditions are present, the members specified and shown in the details are not considered adequate.
      i. When loads imposed by structures or by stored material adjacent to the trench weigh in excess of the load imposed by a two foot soil surcharge. Adjacent shall mean the area within a horizontal distance from the edge of the trench equal to the depth of the trench.
      ii. When vertical loads imposed on crossbraces exceed a 240 pound gravity load distributed on a one foot section of the center of the crossbrace.
      iii. When surcharge loads are present from equipment weighing in excess of 20,000 pounds.
      iv. When only the lower portion of a trench is shored and the remaining portion of the trench is sloped or benched unless:
         1) The sloped portion is sloped at an angle less steep than 3H:1V;
         2) The members are selected from the tables based upon the total trench depth from the top of the overall trench and not the toe of the slope.
3. Cross braces or trench jacks shall be placed in true horizontal position, be spaced vertically, and be secured to prevent sliding, falling or kickouts.
4. Backfilling and removal of trench supports shall progress together from the bottom of the trench. Jacks or braces shall be released slowly and, in unstable soil, ropes shall be used to pull out the jacks or braces from above after employees have cleared the trench.
5. An adequate means of exit shall be provided such as a ladder or steps and shall be located so as to require no more than 25 feet of lateral travel to exit the trench.
6. Where necessary due to wet soils or other similar conditions, the shoring system shall use tight sheeting such that material is contained behind the sheeting.

3.04 ALTERNATIVE SHORING SYSTEMS

A. GENERAL

Alternative shoring systems may be used when approved by the Owner. Steel, aluminum or other approved materials may be used in lieu of wood for shoring where the system is

designed, constructed and maintained in a manner that will give equal to or greater protection than the wood system.

B. SHEET PILING

Sheet piling may be used when approved by the Owner to shore the sides of the trench. Sheet piles shall be removed at the completion of the work unless otherwise directed by the Owner. When piling is to remain, the piling shall be cut off at least three feet from the top of the excavation or at least three feet from the top of the proposed finished grades, whichever is lower. The sheet piling system shall be designed by a Registered Professional Engineer and shall provide equal or greater protection than the specified wood shoring system. Materials for the piling shall be approved by the Owner.

C. TRENCH BOXES

Trench boxes that provide equal or greater protection as the specified wood shoring system may be used. The Contractor shall be responsible for insuring the adequacy, maintenance, and design of the trench box used. The Contractor shall also be responsible for the proper use and operation of the trench box.

D. SHIELD SYSTEMS

1. General
   a. Shield systems shall not be subjected to loads exceeding those which the system was designed to withstand.
   b. Shields shall be installed in a manner to restrict lateral or other hazardous movement of the shield in the event of the application of sudden lateral loads.
   c. Workers shall be protected from the hazard of cave-ins when entering or exiting the areas protected by shields.
   d. Workers shall not be allowed in trenches or shields when shields are being installed, removed, or relocated.
2. Excavations of earth material to a level not greater than two feet below the bottom of a shield shall be permitted, but only if the shield is designed to resist the forces calculated for the full depth of the trench and there are no indications while the trench is open of a possible cave-in below the bottom of the shield.
3. Use of shields shall be subject to approval by the Owner.

END OF SECTION

SECTION 31 24 13

EMBANKMENT

PART 1 - GENERAL

1.01 SUMMARY

A. Section Includes:
   1. Construction of embankments with excess excavated material and borrow.

B. Related Specification Sections include, but are not necessarily limited to:
   1. Division 00 - Bidding Requirements, Contract Forms, and Conditions of the Contract.
   2. Division 01 - General Requirements.

1.02 MEASUREMENT AND PAYMENT

A. Unit Price. No separate payment will be made for this item. Include the cost in associated items for this project.

B. Stipulated Price (Lump Sum). If Contract is a Stipulated Price Contract, payment for Work in this Section is included in total Stipulated Price.

1.03 REFERENCES

A. ASTM D 698 - Standard Test Methods for Laboratory Compaction Characteristics of Soils Using Standard Effort (12,400 ft-lbf/ft3 (600 kNm/m3)).

B. ASTM D 1556 - Standard Test Method for Density and Unit Weight of Soil in Place by the Sand-Cone Method.

C. ASTM D 6938 - Standard Test Methods for In-Place Density and Water Content of Soil and Soil-Aggregate in Place by Nuclear Methods (Shallow Depth).

PART 2 - PRODUCTS

2.01 MATERIALS

A. Refer to Section 31 23 23 - Roadway Excavation.

B. Refer to Section 31 21 33 – Trenching, Backfilling, and Compacting for Utilities.

PART 3 - EXECUTION

3.01 EXAMINATION

A. Verify borrow and excess excavated materials to be reused have been approved by Owner's representative (Geotechnical Engineer).

B. Verify removals and clearing and grubbing operations have been completed.

3.02 PREPARATION

A. Backfill test pits, stump holes, small swales and other surface irregularities. Backfill and compact in designated lift depths to requirements for embankment compaction.

B. Record location and plug and fill inactive water and oil wells. Conform to Texas State Health Department, Texas Commission on Environmental Quality and Texas Railroad Commission requirements. Notify Owner's representative prior to plugging wells.

C. Excavate and dispose of unsuitable soil and other unsuitable materials which will not consolidate. Backfill and compact to requirements for embankment. Unsuitable soil is defined in Section 31 23 16.16 – Structural Excavation for Minor Structures and Section 31 23 33 Trenching, Backfilling, and Compacting for Utilities.

D. Backfill new utilities below future grade. Conform to requirements of 33 10 00 Water Main Construction.

3.03 PROTECTION

A. Protect trees, shrubs, lawns, existing structures, and other features outside of embankment limits.

B. Protect utilities above and below grade, which are to remain.

C. Conform to protection requirements of Section 31 23 16.01 - Roadway Excavation.

3.04 PLACING EMBANKMENT

A. Do not conduct placement operations during inclement weather or when existing ground or fill materials exceed 3 percent of optimum moisture content. Contractor may manipulate wet material to facilitate drying by disking or windrowing.

B. Do not place embankment fill until density and moisture content of previously placed material comply with specified requirements.

C. Scarify areas to be filled to minimum depth of 4 inches to bond existing and new materials. Mix with first fill layer.

D. Spread fill material evenly, from dumped piles or windrows, into horizontal layers approximately parallel to finished grade. Place to meet specified compacted thickness. Break clods and lumps and mix materials by blading, harrowing, disking or other

approved method. Extend each layer across full width of fill.

E. Each layer shall be homogeneous and contain uniform moisture content before compaction. Mix dissimilar abutting materials to prevent abrupt changes in composition of fill.

F. Layers shall not exceed the following compacted thickness:
1. Areas indicated to be under future pavement or shoulders, to be constructed within 6 months: 6 inches when compacted with pneumatic rollers, or 8 inches when compacted with other rollers.
2. Other areas: 12 inches

G. For steep slopes, cut benches into slope and scarify before placing fill. Place increasingly wider horizontal layers of specified depth to level of each bench.

H. Build embankment layers on back slopes, adjacent to existing roadbeds, to level of old roadbed. Scarify top of old roadbed to minimum depth of 4 inches and re-compact with next fill layer.

I. Construct to lines and grades shown on Drawings.

J. Remove unsuitable material and excess soil not being used for embankment from site in accordance with requirements of Section 01 74 19 – Construction Waste Management and Disposal.

K. Maintain moisture content of embankment materials to attain required density.

L. Compact to following minimum densities at moisture content of optimum to 3 percent above optimum as determined by ASTM D 698, unless otherwise indicated on Drawings:
1. Areas under future paving and shoulders: Minimum density of 95 percent of maximum dry density.
2. Other areas: Minimum density of 90 percent of maximum dry density.

3.05 TOLERANCES

A. Top of compacted surface: Plus or minus ½-inch in cross section or 16 foot length.

3.06 FIELD QUALITY CONTROL

A. Compaction Testing will be performed in accordance with ASTM D 1556 or ASTM D 6938 under provisions of Section 01 45 29 - Testing Laboratory Services.

B. A minimum of three tests will be taken for each 1000 linear feet per lane of roadway or 500 square yards of embankment per lift.

C. If tests indicate work does not meet specified compaction requirements, recondition, re-compact, and retest at no additional cost to Owner.

END OF SECTION

SECTION 31 31 16 - TERMITE CONTROL

PART 1 - GENERAL

1.01 SUMMARY

A. This Section includes soil treatment for termite control.

B. Definitions: As follows:

1. EPA: Environmental Protection Agency.
2. PCO: Pest control operator.

C. Submittals: Treatments and application instructions, including EPA-Registered Label, special warranties, and the following:

1. Soil Treatment Application Report: After application of termiticide is completed, submit report for Owner's record information, including the following as applicable:
   a. Date and time of application.
   b. Moisture content of soil before application.
   c. Brand name and manufacturer of termiticide.
   d. Quantity of undiluted termiticide used.
   e. Dilutions, methods, volumes, and rates of application used.
   f. Areas of application.
   g. Water source for application.

D. Applicator Qualifications: A PCO who is licensed according to regulations of authorities having jurisdiction to apply termite control treatment in jurisdiction where Project is located and who is experienced and has completed termite control treatment similar to that indicated for this Project and whose work has a record of successful in-service performance.

E. Regulatory Requirements: Formulate and apply termiticides, and label with a Federal registration number, to comply with EPA regulations and authorities having jurisdiction.

F. Coordinate soil treatment application with excavating, filling, and grading and concreting operations. Treat soil under footings, grade beams, and ground-supported slabs, before construction.

G. General Warranty: Special warranty specified shall not deprive Owner of other rights Owner may have under other provisions of the Contract Documents and shall be in addition to, and run concurrent with, other warranties made by Contractor under requirements of the Contract Documents.

H. Special Warranty: Written warranty, signed by applicator and Contractor certifying that termite control work, consisting of applied soil termiticide treatment, will prevent infestation of subterranean termites for three years from date of Substantial Completion. If subterranean termite activity or damage is discovered during warranty period, re-treat soil and repair or replace damage caused by termite infestation.

PART 2 - PRODUCTS

2.01 MATERIALS

A. Termiticide: Provide an EPA-registered termiticide complying with requirements of authorities having jurisdiction, in a soluble or emulsible, concentrated formulation that dilutes with water or foaming agent, and formulated to prevent termite infestation. Use only soil treatment solutions that are not harmful to plants. Provide quantity required for application at the label volume and rate for the maximum termiticide concentration allowed for each specific use, according to the product's EPA-Registered Label.

PART 3 - EXECUTION

3.01 INSTALLATION

A. Application: Mix soil treatment termiticide solution to a uniform consistency. Provide quantity required for application at the label volume and rate for the maximum specified concentration of termiticide, according to manufacturer's EPA-Registered Label, to the following so that a continuous horizontal and vertical termiticidal barrier or treated zone is established around and under building construction. Distribute the treatment evenly.

1. Slabs-on-grade.
2. Foundations.
3. Masonry: Treat voids.
4. Penetrations: At expansion joints, control joints, and areas where slabs will be penetrated.

B. Avoid disturbance of treated soil after application. Keep off treated areas until completely dry.

C. Protect termiticide solution, dispersed in treated soils and fills, from being diluted until ground-supported slabs are installed. Use waterproof barrier according to EPA-Registered Label instructions.

D. Post warning signs in areas of application.

E. Reapply soil treatment solution to areas disturbed by subsequent excavation, grading, landscaping, or other construction activities following application.

END OF SECTION 31 31 16

SECTION 32 13 12

HOT MIX ASPHALTIC CONCRETE PAVEMENT

PART 1 - GENERAL

1.01 SUMMARY

A. Section Includes:
1. Furnishing and installing of a surface for pavement consisting of compacted mixture of coarse and fine aggregates and asphaltic material.
2. Paving construction will be on stabilized subgrades and/or base to conform with the lines, grades, compaction thickness and the typical cross sections as shown on the plans.

B. Related Specification Sections include, but are not necessarily limited to:
1. Division 00 - Bidding Requirements, Contract Forms, and Conditions of the Contract.
2. Division 01 - General Requirements.
3. Section 31 23 00 - Earthwork.

1.02 MEASUREMENT AND PAYMENT

A. Unit Price. No separate payment will be made for this item. Include the cost in associated items for this project.

B. Stipulated Price (Lump Sum). If Contract is a Stipulated Price Contract, payment for Work in this Section is included in total Stipulated Price.

1.03 QUALITY ASSURANCE

A. REFERENCED STANDARDS:
1. Texas Department of Transportation Standard Specifications for Construction of Highways, Streets and Bridges.

1.05 PROJECT/SITE CONDITIONS

A. PLACEMENT
1. No asphaltic mixture, prime coat, nor tack coat shall be placed when the air temperature is below 50E F and falling but it may be placed when the temperature is 40EF and rising. Temperature readings shall be taken in the shade away from artificial heat. Place asphaltic mixtures only when weather conditions are suitable, in the opinion of the Owner's representative.

PART 2 - PRODUCTS

2.01 MATERIALS

The materials will consist of crushed or uncrushed coarse aggregate mixed with any approved binding material necessary to meet the specified requirements.

A. AGGREGATE

1. Composition of the mineral aggregate shall be of both a course aggregate and a fine aggregate and may include a mineral filler. If required, samples of aggregates shall be submitted for testing.
2. Coarse Aggregate
   a. The coarse aggregate shall consist of that part of the aggregate retained on a No. 10 sieve. The coarse aggregate shall consist of clean, tough, durable fragments of stone, crushed gravel or a combination of both, as specified herein, and shall be of a uniform quality throughout free from dirt, organic or other injurious matter occurring either freely in the material or as a coating of the aggregate. The coarse aggregate shall have a maximum percent abrasion of 40 when subjected to the Los Angeles Abrasion Test (Tex-410-A) and a maximum percent loss of 30 when subjected to the 5 cycle Magnesium Sulfate Soundness Test (Tex-411-A).
3. Fine Aggregate
   a. The fine aggregate shall be that part of the aggregate passing the No. 10 sieve and consist of sand and fine aggregate particles from the coarse aggregates' material sources or a combination thereof. The sand shall be composed of durable particles free from injurious foreign matter and shall be limited to fifteen percent (15%) of the total fine aggregate. Screenings shall be of the same or similar materials as specified for coarse aggregates. The plasticity index of that passing the No. 40 sieve shall be a maximum six (6) when tested by AASHTO T-89 and T-90. Unless otherwise shown on the plans, stone screenings are required and shall be the result of a rock crushing operation and meet the following gradation requirements, when tested in accordance with Test Method Tex-200-F, Part I.

	Percent by Weight
Passing the 3/8 Inch Sieve	100
Passing the No. 10 Sieve	70-100
Passing the No. 200 Sieve	0-15

4. Mineral Filler
   a. The mineral filler shall consist of thoroughly dry stone dust, Portland cement, fly ash or other mineral dust approved by the Owner's representative. The mineral filler shall be free from foreign and other injurious matter. The mineral filler shall meet the following grading requirements when testing in accordance with Tex-200-F, unless the plans show otherwise:

	Percent by Weight
Passing a No. 30 Sieve	95 to 100
Passing a No. 80 Sieve, Not Less Than	75
Passing a No. 200 Sieve, Not Less Than	55

5. Asphalt
   a. The grade of the asphalt shall be AC-20. If more than one (1) type of asphaltic concrete mixture is specified for the project, only one (1) grade of asphalt will be required for all types of mixtures. The asphaltic materials shall be homogeneous, free from water, and shall not foam when heated to 350E F. The material shall meet the following requirements:

Viscosity Grade	AC-20	
Property	Minimum	Maximum
Viscosity, 140N F, Poises	1,600	2,400
275N F, Poises	2.5	--
Penetration, 77N F, 100 g, 5 sec.	55	--
Flash Point, C.O.C., F	450	--
Solubility in Trichloroethylene, %	99.0	--
Spot Test	Negative	
Tests on Residue From Thin Film Oven Test: Viscosity, 140N F, Poises	--	6,000
Ductility, 77N F, 5 cm per min., cm	70	--

All asphalt shall be obtained from TxDOT pretested stock.

Asphalt material for the prime coat shall be MC-30, and asphalt material for the tack coat shall be RC-250 and must meet the following requirements:

Type-Grade	MC-30		RC-250	
Property	Minimum	Maximum	Minimum	Maximum
Kinematic Viscosity @ 140N F, cst	30	60	250	400
Water, percent	--	0.2	--	0.2
Flash Point, T.O.C., F	100	--	80	--
Distillation Test: Distillate, Percentage by				

Volume of Total Distillate to 680N F				
to 437N F	--	25	40	75
to 500N F	40	70	65	90
to 600N F	75	93	85	--
Residue From Distillation, Volume %	50	--	70	--
Tests on Distillation Residue:				
Penetration, 100 g, 5 sec., 77N F	120	250	80	120
Ductility, 5 cm/ min., 77N F, cm	100*	--	100	--
Solubility in Trichloroethylene, %	99.0	--	99.0	--
Spot Test	Negative		Negative	

*If the penetration is more than 200 and the ductility at 77N F is less than 100 cm, the material will be acceptable if its ductility at 60N F is more than 100.

All prime coat or tack coat materials shall be obtained from TxDOT pretested stock.

6. Hot-Mix Asphalt Concrete
   a. Design Mixes. After being tested in accordance with these specifications and current TxDOT methods, the design mixes and materials are subject to approval of the Owner's representative. Design mixes and density and stability tests are the Contractor's responsibility and made at his expense. All certified test results, stating compliance with the specified requirements, for both the asphaltic materials and aggregates shall be furnished to the Owner's representative.
   b. Density and Stability Requirements. Laboratory density and stability of the mixture shall be designed and tested in accordance with the methods outlined in the TxDOT C-14 and meet the following:

Density %		Stability %	
Minimum	Maximum	Optimum	Not Less Than
95	99	96	35

1) The compacted thickness of the mixture(s) used shall be specified on the plans.

2) Hot-Mix Asphaltic Concrete Surface Course - Type "D"

Master Grading Requirements for the Aggregates

Sieve Sizes	Total Percent Passing, by Weight
1-1/2-inch	
1-1/4-inch	
1-inch	
7/8-inch	
5/8-inch	
1/2-inch	100%
3/8-inch	85-100%
1/4-inch	
No. 4	50-70%
No. 10	32-42%
No. 40	11-26%
No. 80	4-14%
No. 200	1-6%*
VMA % Minimum	14

*2-8 when Test Method Tex-200-F, Part II (Washed Sieve Analysis) is used.

The asphaltic material shall form four percent (4%) to eight percent (8%) of the mixture by weight.

7. Type of Plant.
   a. Mixing plants must be approved by the Owner's representative and have the capacity for producing mixtures that meet the specifications. Continuous mixing type and weight batching-type are both acceptable. The plant must have acceptable conveyors, power units, aggregate handling equipment, hot aggregate screens and bins and dust collectors. The plant must provide equipment to adequately supply materials in accordance with the plant's rated capacity and produce finished material within the specified tolerances. Essential equipment includes cold aggregate bins and proportioning device, dryer, screens, aggregate weight box and batching scales, mixer, asphalt storage and heating devices and asphalt measuring devices.

2.02 FABRICATION

A. SCREENING AND PROPORTIONING

1. Screening capacity and bin sizes shall be adequate to screen and store the amount of aggregate required to properly operate and keep the plant in continuous operation at full capacity.

B. DRYING

1. The mineral aggregate drying shall be done in a manner such that fine particles will not be lost with the furnace gases. A dust collector system will be required if forced draft is used. The Owner's representative may require that a dust collector system be used during forced draft if a substantial amount of the finer particles are escaping. The aggregate shall be continuously agitated during heating in a suitable apparatus in which the temperature can be efficiently controlled so that the aggregate will not be damaged and the finished mixture will have a temperature of between 250N F and 375N F.
   a. A recording thermometer shall be used to record the temperature of the aggregate as it leaves the dryer. The temperature record shall be a twenty-four (24) hour chart and may be equipped to record both the temperature of the rock and the temperature of the aggregate incorporated into the batch. The dryer(s) shall be of adequate size to heat and dry the required amount of aggregate to keep the plant in continuous operation.

C. WEIGH BOX

1. Tight cut-off gates shall be provided on the storage bins so that mineral aggregates will not leak into the weigh box. The weigh box shall be of a sufficient capacity to hold a complete batch of aggregate without wasting or leveling by hand. The weigh box shall be designed so that the entire batch will quickly discharge into the mixer. The weigh box shall have an open top so that any excess of one (1) size of mineral aggregate may be removed by the operator, during charging. The weigh box shall have a close fitting and quick operating cut-off gate so that no mineral aggregate will leak into the mixer.

D. SCALES

1. Either the springless dial type or the multibeam-type scales may be used for weighing the different grades of mineral aggregate. If using a springless dial type, an adjustable indicating pointer shall be required for each grade of the mineral aggregate allowing for an accurate setting of the weight. If using a multibeam-type, there shall be sufficient weighing beams to weigh each grade of aggregate separately. All scales shall have a tare beam for balancing. The beam scale is also required to be equipped with a tell-tale dial indicator of the springless dial type indicating over and under load of at least fifty (50) pounds. Scales that are not accurate within four (4) pounds per 1,000 pounds net load will not be considered adequate. The scales shall be insulated against shock or vibration so that neither case shall interfere with accurate weighing.

E. MIXING

1. The mixer shall be the twin-pug-mill type and shall have a capacity of not less than 2,000 pounds in a single batch. The positioning and number of blades shall be sufficient to give a uniform and complete circulation of the batch in the mixer from the center to the four (4) ends of the mixer arms and than back to the center. A mixer will be considered inadequate if it fails to perform a uniform and thorough mixing

with the asphalt cement and the aggregate or it has a tendency to segregate mineral aggregate. Mixer determination will be made by mixing a standard batch for the required time and then dumping out the batch in order to take samples from different parts of the batch for testing.

2. All mixers shall be provided with automatic time locks on the discharge gates and weigh box and will be locked for a period of forty-five (45) seconds after all of the mineral aggregate have been introduced into the mixer. The mixture shall have a temperature of 300N to 375N when discharged. The mixer dump door shall be tight to the dry mineral aggregate or dust so that there will be no spilling from the pug mill. All mineral aggregate shall be thoroughly mixed for a period of five (5) to ten (10) seconds before the asphalt cement is added. Mixing will then continue for the required time, or longer if necessary to produce a mixture with uniform consistency.

F. HEATING AND WEIGHING ASPHALT

1. Storage for the asphalt cement shall be adequate to meet the requirements of the plans. Asphalt cement in storage shall be heated by steam coils, tight enough to prevent moisture from leaking into the asphalt. Steam for heating shall not be at a temperature in excess of 400N F. Direct fire heating of asphalt shall not be permitted.
2. The steam heating system shall insure that uniform draw-off heat of the asphalt cement is maintained between 250N F and 350N F at the asphalt cement bucket. The temperature shall be maintained with an efficient and positive control of the heat beyond 250N F, either before or during mixing with the mineral aggregate.
3. The asphalt cement draw-off valve shall be of a quick cutoff type that will not leak any asphalt into the bucket after the required weight of the asphalt cement has been drawn. The asphalt supply line must be of a circulating type and must be equipped with a recording thermometer indicating the temperature of the asphalt at the draw-off valve. The recording thermometer may be a combination thermometer used for recording the temperature of the aggregate.
4. The asphalt cement shall flow from the asphalt cement weigh bucket into the mixer for approximately the full width of the mixer so as not to deposit the asphalt cement in the mixer in one (1) place. Scales used for weighing the asphaltic cement shall be of springless dial type arranged for quick adjustment at zero to provide for the change in tare. A pointer will indicate the weight of the asphaltic cement required in one (1) batch.

PART 3 - EXECUTION

3.01 PREPARATION

A. The base course or asphalt course to be overlayed shall be cleaned by sweeping or other methods approved by the Owner's representative. The base course shall be lightly sprinkled immediately before the prime coat is applied. All rate of application and pressure gauges will be inspected and calibrated prior to applying the prime or tack coat. MC-30 prime coat shall be applied at a rate of 0.30 gallons per square yard at a temperature between 70° and 150° F. The prime coat shall dry for a period of forty-eighty (48) hours or longer if required by the Owner's representative. RC-250 tack coat shall be applied at a rate of 0.10 gallons per square yard at a temperature between 70E

and 150E F. The prime and tack coats will be applied in strict accordance with the requirements of Item 310 of the TxDOT Standard Specifications for Construction of Highways, Streets and Bridges.

3.02 ERECTION/INSTALLATION/APPLICATION AND/OR CONSTRUCTION

A. LAYING

1. The asphaltic concrete mixture shall be hauled to the worksite in vehicles cleaned of all foreign materials and, if required by the Owner's representative, covered with a canvas that is sufficient to protect the entire load. The vehicle dispatching shall be arranged so that all material delivered may be placed and initially rolled in the daylight. The mixture shall be pre-placed on approved subgrade. The "lay down" machine shall be capable of spreading the mix to the line, grade and crown as specified in the plans. The mixture shall be spread without segregation or tearing. The mixture must be at a temperature between 200N F and 350N F.
2. The base course shall be spread in one (1) lift so that when compacted, the finished course will be smooth, of uniform density and will be to section, line and grades as directed.
3. A surface course of two (2) inches or less in thickness may be spread in one (1) lift. All lifts shall be spread such that when compacted, the finished course will be smooth, of uniform density and will be to section, line and grades as directed.
4. Asphalt base and surface courses may be spread and finished by hand if use of a paver is impractical. Steel or wood forms, rigidly supported to assure correct grade and cross-section, shall be used. Place the materials carefully in order to avoid segregation of the mix. Broadcasting of the material shall not be permitted. Any lumps which do not break down must be removed. Asphalt courses must be put down in the same sequence as if placed by machine.

B. ROLLING

1. Rolling equipment shall consist of pneumatic tire and steel wheel rollers.
   a. Pneumatic tire rollers shall have equal size and diameter pneumatic tires that are capable of exerting a contact pressure varying from 40 to 110 psi by adjusting ballast and/or tire pressure. Wheel spacing will be such that one (1) pass will accomplish one (1) complete coverage equal to the width of the roller and have a one-fourth (1/4) inch minimum overlap. None of the wheels shall wobble. The tire pressure and operating weight shall be sufficient to achieve the desired density. The roller shall be self-propelled.
   b. Steel wheel rollers shall be a three (3) wheel roller two (2) axle tandem roller or three (3) axle tandem roller weighing not less than eight (8) tons and developing a compression in the rear wheels of 250 to 350 pounds per inch of roller width. The rollers shall have power units and be equipped with the means of keeping the wheel wet to prevent the mixes from sticking to the rollers. The rollers shall also be equipped with scrapers to keep the wheels clean.
   c. Rolling shall start at the sides longitudinally and proceed toward the center of the pavement, overlapping on successive trips by at least one-half (1/2) of the width of the rear wheels. Alternate trips of the roller shall be slightly different in length. Continue rolling until no further compression can be obtained and all roller marks

are eliminated. The roller motion shall be slow enough to insure no displacement of the hot mixture. The roller must not sit on completed pavement which has not cooled to the normal atmospheric temperature. The wheels shall be properly moistened with water to prevent the hot mixture from sticking to the rollers, but an excess of water shall not be permitted.

d. If the asphalt is not being compacted properly, in the opinion of the Owner's representative, then cores will be taken and tested in order to determine the relative densities of the course at various locations.

e. The completed course shall have a uniform density over the entire roadway area. The Owner's representative may, after testing under acceptable practices, have all or parts of the course removed and replaced on areas where the density is found to vary. The task of removing and replacing of the course because of unacceptable density variations shall be completed at the cost of the Contractor.

C. HAND TAMPING

1. In areas where compaction by a roller is not easily accomplished, such as along walls, curbs, headers, etc., a vibrating plate compactor or lightly oiled tamps shall be used to thoroughly compact the mixture in three (3) inch layers.

D. DENSITY

1. The base course, binder course and surface course shall be compacted to a minimum density of ninety-five percent (95%) of the maximum possible density of a voidless mixture composed of the same materials in like proportions. If the results of the density tests for the base course, binder course or surface course indicate that the minimum density of ninety-five percent (95%) has not been obtained, additional rolling with a three (3) wheel or pneumatic roller will be required before the mix cools.

E. SURFACE REQUIREMENTS

1. The finished surface of plane areas shall not vary more than one-fourth (1/4) inch from a sixteen (16) foot straightedge applied to the surface. The straightedge must overlap the previous test by one-fourth (1/4) of its length. Any irregularities which vary more than three-sixteenths (3/16) inch in ten (10) feet or one-fourth (1/4) inch in sixteen (16) feet in accordance with the grade, valley and crown shown on the plans shall be corrected.

F. CONSTRUCTION JOINTS

1. Each course shall be placed as nearly continuous as possible. The roller shall only pass over the unprotected end of the freshly laid mixture when the laying of the course is discontinued for such a length of time as to allow for the mixture to become chilled. In such cases, when the work is resumed, the material laid shall be either cut back in order to obtain a beveled edge for the full thickness of the course or an acceptable lap joint shall be made.

G. No portion of the finished asphalt course shall be opened to traffic until twelve (12) hours after rolling has been completed, except where shown on the plans or in an emergency.

3.03 REPAIR/RESTORATION

A. Pavement sections not meeting the specified densities shall be recompacted or replaced with new asphaltic concrete material. Pavement not having an acceptable surface course texture, not meeting surface test requirements or not meeting the minimum thickness shall be replaced with new material sections of surface course.

3.04 FIELD QUALITY CONTROL

A. EXTRACTION TEST

1. The percentage of bitumen in any mixture shall not vary more than one-half (1/2) of one percent (1%) from the proportion established by the Owner's representative. Samples of the hot mixture may be taken from the trucks or from the finished pavement, when required by the Owner's representative. The minimum weight of the test specimen in grams shall be determined by multiplying 3,000 by the maximum size aggregate in inches; and when tested by standard laboratory methods (in which benzol may be used as the solvent), it shall not vary from the grading proportions specified, according to the mix being tested, by more than five percent (5%) in any particular case.

B. Cores may be taken from the finished hot-mix asphalt concrete. The quality and thickness of the cores will govern the acceptance of the pavement.

END OF SECTION

SECTION 32 13 13

CONCRETE PAVING FOR PEDESTRIAN AND VEHICULAR AREAS

PART 1 - GENERAL

A. This section includes concrete paving for both pedestrian and vehicular areas. Refer to the following portions of this Section:
   1. Part 2 - Concrete Paving for Pedestrian Areas
   2. Part 5 - Concrete Paving for Vehicular Areas

PART 2 - CONCRETE PAVING FOR PEDESTRIAN AREAS

2.01 SUMMARY

A. This Section includes exterior cement concrete pavement for the following:
   1. Walkways.
   2. Courtyards.
   3. Plazas.
   4. Pedestrian Ramps.

2.02 SUBMITTALS

A. Product Data: For each type of product indicated.

B. Design Mixtures: For each concrete pavement mixture.

C. Related Sections:
   1. Section 07 92 00 “Joint Sealants” for expansion joints within pedestrian pavements

2.03 QUALITY ASSURANCE

A. Manufacturer Qualifications: Manufacturer of ready-mixed concrete products who complies with ASTM C 94/C 94M requirements for production facilities and equipment.

B. ACI Publications: Comply with ACI 301, "Specification for Structural Concrete," unless modified by requirements in the Contract Documents.

PART 3 - PRODUCTS

3.01 STEEL REINFORCEMENT

A. Plain-Steel Welded Wire Reinforcement: ASTM A-185, fabricated from as-drawn steel wire into flat sheets.

B. Deformed-Steel Welded Wire Reinforcement: ASTM A-497, flat sheet.

C. Reinforcing Bars: ASTM A 615/A 615M, Grade 60; deformed.

D. Plain Steel Wire: ASTM A 82, as drawn.

E. Deformed-Steel Wire: ASTM A-496.

F. Bar Supports: Bolsters, chairs, spacers, and other devices for spacing, supporting, and fastening reinforcing bars, welded wire reinforcement, and dowels in place. Manufacture bar supports according to CRSI's "Manual of Standard Practice."

3.02 CONCRETE MATERIALS

A. Cementitious Material: Use[one of] the following Cementitious materials, of the same type, brand, and source throughout the Project:
   1. Portland Cement: ASTM C 150, Type gray.
      a. Ground Granulated Blast-Furnace Slag: ASTM C 989, Grade 100 or 120.
   2. Blended Hydraulic Cement: ASTM C 595.

B. Normal-Weight Aggregates: ASTM C 33, coarse aggregate, uniformly graded. Provide aggregates from a single source.

C. Water: ASTM C 94/C 94M.

D. Air-Entraining Admixture: ASTM C 260.

E. Chemical Admixtures: ASTM C 494/C 494M, of type suitable for application, certified by manufacturer to be compatible with other admixtures and to contain not more than 0.1 percent water-soluble chloride ions by mass of cementitious material.

3.03 FIBER REINFORCEMENT

A. Synthetic Fiber: Polypropylene fibers engineered and designed for use in concrete pavement, complying with ASTM C 1116, Type III, 1/2 to 1-1/2 inches long.

3.04 CURING MATERIALS

A. Absorptive Cover: AASHTO M 182, Class 2, burlap cloth.

B. Moisture-Retaining Cover: ASTM C 171, polyethylene film or white burlap-polyethylene sheet.

C. Water: Potable.

D. Evaporation Retarder: Waterborne, monomolecular film forming; manufactured for application to fresh concrete.

E. Clear Waterborne Membrane-Forming Curing Compound: ASTM C 309, Type 1, Class B, dissipating.

F. White Waterborne Membrane-Forming Curing Compound: ASTM C 309, Type 2, Class B.

3.05 RELATED MATERIALS

A. Expansion- and Isolation-Joint-Filler Strips: ASTM D 1751, asphalt-saturated cellulosic fiber or ASTM D 1752, cork or self-expanding cork.

B. Slip-Resistive Aggregate Finish: Factory-graded, packaged, rustproof, non-glazing, abrasive aggregate of fused aluminum-oxide granules or crushed emery with emery aggregate containing not less than 50 percent aluminum oxide and not less than 20 percent ferric oxide; unaffected by freezing, moisture, and cleaning materials.

3.06 CONCRETE MIXTURES

A. Prepare design mixtures, proportioned according to ACI 301, with the following properties:
1. Compressive Strength (28 Days): 3000 psi.
2. Maximum Water-Cementitious Materials Ratio at Point of Placement0.50.
3. Slump Limit: 4 inches, plus or minus 1 inch.
4. Air Content 5-1/2 percent plus or minus 1.5 percent.

B. Synthetic Fiber: Uniformly disperse in concrete mix at manufacturer's recommended rate, but not less than 1.0 lb/cu. yd.

C. Color Pigment: Add color pigment to concrete mixture according to manufacturer's written instructions.

3.07 CONCRETE MIXING

A. Ready-Mixed Concrete: Measure, batch, and mix concrete materials and concrete according to ASTM C 94/C 94M and ASTM C 1116. Furnish batch certificates for each batch discharged and used in the Work.

PART 4 - EXECUTION

4.01 EXAMINATION

A. Proof-roll prepared sub-base surface below concrete pavements with heavy pneumatic-tired equipment to identify soft pockets and areas of excess yielding.

4.02 EDGE FORMS AND SCREED CONSTRUCTION

A. Set, brace, and secure edge forms, bulkheads, and intermediate screed guides for pavement to required lines, grades, and elevations. Install forms to allow continuous progress of work and so forms can remain in place at least 24 hours after concrete placement.

B. Clean forms after each use and coat with form-release agent to ensure separation from concrete without damage.

4.03 STEEL REINFORCEMENT

A. General: Comply with CRSI's "Manual of Standard Practice" for fabricating, placing, and supporting reinforcement.

4.04 JOINTS

A. General: Form construction, isolation, and contraction joints and tool edgings true to line with faces perpendicular to surface plane of concrete. Construct transverse joints at right angles to centerline, unless otherwise indicated.

B. Construction Joints: Set construction joints at side and end terminations of pavement and at locations where pavement operations are stopped for more than one-half hour unless pavement terminates at isolation joints.

C. Isolation Joints: Form isolation joints of preformed joint-filler strips abutting concrete curbs, catch basins, manholes, inlets, structures, walks, other fixed objects, and where indicated.

D. Contraction Joints: Form weakened-plane contraction joints, sectioning concrete into areas as indicated. Construct contraction joints for a depth equal to at least one-fourth of the concrete thickness. If applicable, match jointing of existing adjacent concrete pavement.

E. Edging: Tool edges of pavement, gutters, curbs, and joints in concrete after initial floating with an edging tool to a 3/16-inch radius. Repeat tooling of edges after applying surface finishes. Eliminate tool marks on concrete surfaces.

4.05 CONCRETE PLACEMENT

A. Moisten sub-base to provide a uniform dampened condition at time concrete is placed.

B. Comply with ACI 301 requirements for measuring, mixing, transporting, and placing concrete.

C. Deposit and spread concrete in a continuous operation between transverse joints. Do not push or drag concrete into place or use vibrators to move concrete into place.

D. Screed pavement surfaces with a straightedge and strike off.

E. Commence initial floating using bull floats or darbies to impart an open textured and uniform surface plane before excess moisture or bleed water appears on the surface. Do not further disturb concrete surfaces before beginning finishing operations or spreading surface treatments.

4.06 FLOAT FINISHING

A. General: Do not add water to concrete surfaces during finishing operations.

B. Float Finish: Begin the second floating operation when bleed-water sheen has disappeared and concrete surface has stiffened sufficiently to permit operations. Float surface with power-driven floats, or by hand floating if area is small or inaccessible to power units. Finish surfaces to true planes. Cut down high spots and fill low spots. Refloat surface immediately to uniform granular texture.
   1. Burlap Finish: Drag a seamless strip of damp burlap across float-finished concrete, perpendicular to line of traffic, to provide a uniform, gritty texture.
   2. Medium-to-Fine-Textured Broom Finish: Draw a soft bristle broom across float-finished concrete surface perpendicular to line of traffic to provide a uniform, fine-line texture.
   3. Medium-to-Coarse-Textured Broom Finish: Provide a coarse finish by striating float-finished concrete surface 1/16 to 1/8 inch deep with a stiff-bristled broom, perpendicular to line of traffic.

C. Slip-Resistive Aggregate Finish: Before final floating, spread slip-resistive aggregate finish on pavement surface according to manufacturer's written instructions.
   1. Cure concrete with curing compound recommended by slip-resistive aggregate manufacturer. Apply curing compound immediately after final finishing.
   2. After curing, lightly work surface with a steel wire brush or abrasive stone and water to expose nonslip aggregate.

4.07 CONCRETE PROTECTION AND CURING

A. General: Protect freshly placed concrete from premature drying and excessive cold or hot temperatures.

B. Comply with ACI 306.1 for cold-weather protection.

C. Evaporation Retarder: Apply evaporation retarder to concrete surfaces if hot, dry, or windy conditions cause moisture loss approaching 0.2 lb/sq. ft. x h before and during finishing operations. Apply according to manufacturer's written instructions after placing, screeding, and bull floating or darbying concrete, but before float finishing.

D. Begin curing after finishing concrete but not before free water has disappeared from concrete surface.

E. Curing Methods: Cure concrete by moisture curing, moisture-retaining-cover curing, curing compound, or a combination of these methods.

4.08 PAVEMENT TOLERANCES

A. Comply with tolerances of ACI 117 and as follows:

1. Elevation: 1/4 inch.
2. Thickness: Plus 3/8 inch, minus 1/4 inch.
3. Surface: Gap below 10-foot long, unleveled straightedge not to exceed 1/4 inch.
4. Joint Spacing: 3 inches.
5. Contraction Joint Depth: Plus 1/4 inch, no minus.
6. Joint Width: Plus 1/8 inch, no minus.

4.09 REPAIRS AND PROTECTION

A. Remove and replace concrete pavement that is broken, damaged, or defective or that does not comply with requirements in this Section.

B. Protect concrete from damage. Exclude traffic from pavement for at least 14 days after placement.

C. Maintain concrete pavement free of stains, discoloration, dirt, and other foreign material. Sweep concrete pavement not more than two days before date scheduled for Substantial Completion inspections.

PART 5 – CONCRETE PAVING FOR VEHICULAR AREAS

5.01 SCOPE OF WORK

A. This Section specifies the requirements for forming and placing reinforced concrete curbs and vehicular pavement to the lines and grades shown on the drawings and constructed as specified herein.

5.02 APPLICABLE PUBLICATIONS

The following specifications and standards of the latest issues listed below, but referred to thereafter by basic designation only, form a part of this specification to the extent indicated by the references thereto:

A. Texas Department of Transportation 2004 Standard Specifications for Construction and Maintenance of Highways, Streets and Bridges (TxDOT).
1. Item 360 - Concrete Pavement
2. Item 421 – Hydraulic Cement Concrete

B. American Society for Testing and Materials Standards (ASTM):
1. D 1751 - Standard Specification for Preformed Expansion Joint Filler for Concrete Paving and Structural Construction
2. A 653 – Standard Specification for Steel Sheet, Zinc-Coated (Galvanized) by the Hot-Dip Process
3. C 309 – Standard Specification for Liquid Membrane-Forming Compounds for Curing Concrete
4. A 615 – Standard Specification for Deformed and Plain Carbon-Steel Bars for Concrete Reinforcement

5. C 94 – Standard Specification for Ready-Mixed Concrete
6. C 31 – Standard Practice for Making and Curing Concrete Test Specimens in the Field
7. C 39 – Standard Test Method for Compressive Strength of Cylindrical Concrete Specimens
8. A 185 – Standard Specification for Steel Welded Wire Reinforcement, Plain, for Concrete
9. D 698 – Standard Test Methods for Laboratory Compaction Characteristics of Soil Using Standard Effort
10. D 994 – Standard Specification for Preformed Expansion Joint Filler for Concrete (Bituminous Typed)

5.03 RELATED WORK SPECIFIED ELSEWHERE

A. Section 31 22 13 Site Grading

B. Section 31 32 13.16 Cement Stabilization

C. Section 31 32 13.19 Lime Stabilization

D. Section 32 17 23 Painted Pavement Markings

5.04 PROJECT CONDITIONS

A. Traffic Control: Maintain access for vehicular and pedestrian traffic as required for other construction activities.

5.05 SUBMITTALS

A. Product Data: For each type of manufactured material and product indicated.

B. Design Mixtures: For each concrete pavement mixture. Include alternate mixture designs when characteristics of materials, Project conditions, weather, test results, or other circumstances warrant adjustments.

C. If there is an exposed aggregate finish the following sample shall be submitted. Samples: 10-lb (4.5-kg) sample of exposed aggregate.

D. Material Test Reports: From a qualified testing laboratory indicating and interpreting test results for compliance of the following with requirements indicated, based on comprehensive testing of current materials:

E. Material Certificates: Signed by manufacturers certifying that each of the following materials which are part of this project, complies with requirements:
1. Cementitious materials.
2. Steel reinforcement and reinforcement accessories.
3. Admixtures.

4. Curing compounds.
5. Applied finish materials.
6. Bonding agent or epoxy adhesive.
7. Joint fillers.

5.06 QUALITY ASSURANCE

A. Manufacturer Qualifications: Manufacturer of ready-mixed concrete products who complies with ASTM C 94/C 94M requirements for production facilities and equipment.

PART 6 - PRODUCTS

6.01 CONCRETE

A. Cement, aggregates, admixtures, and water shall conform to the specifications of TXDOT, Item 421. Preparation of concrete mix shall be in accordance with article 360.4 of TxDOT, Item 360.

B. Maximum size of aggregate 1-1/2 inches.

C. Slump shall range from 2 to 5 inches.

D. Air entrainment concrete mixture shall have an air content by volume of 4.5 percent plus or minus 1.5%.

E. Concrete shall be mixed in accordance with TxDOT, Item 421.

F. Ready mixed concrete conforming to ASTM C 94 may be used.

G. The concrete mix shall be designed by a commercial testing laboratory, and submitted for approval.

6.02 REINFORCEMENT

A. Reinforcing steel shall meet the specifications of ASTM A615, Grade 60. Bars shall be deformed billet steel free of defects.

6.03 BOARD FILLER

A. Filler board of selected stock. Use wood of density and type as follows:
1. Clear, all-heart cypress weighing no more than 40 pounds per cubic foot, after being oven dried to constant weight.
2. Clear, all-heart redwood weighing no more than 30 pounds per cubic foot, after being oven dried to constant weight.

B. Board filler shall be free of defects which will impair their usefulness as expansion

joint fillers.

6.04 PREFORMED BITUMINOUS EXPANSION BOARD

A. Preformed bituminous expansion boards shall meet the specifications for ASTM D 994 and D 1751.

6.05 JOINT SEALING MATERIAL

A. Curb and Pavement joint sealing material shall meet the requirements and specifications of TxDOT Items 360.2F and 360.4D.

B. Sidewalk joint sealing materials shall be GC-9 synthacalk sealant as manufactured by Pecora or approved equal.

6.06 DEFORMED CONTRACTION JOINT METAL STRIPS

A. Deformed contraction joint metal strips shall be 28 ga. steel, galvanized 1.25 oz. per square foot or heavier and meet the specifications of ASTM A 653.

6.07 CURING COMPOUND

A. Curing compound shall conform to the specifications of ASTM C 309, Type 1 or Type 2, white pigmented.

6.08 LOAD TRANSMISSION DEVICES FOR EXPANSION AND CONTRACTION JOINTS

A. Load Transmission devices shall be as detailed on plans and conform to the properties specified in ASTM A615, Grade 60 steel.

6.09 STEEL DOWEL BARS

A. Steel dowel bars and steel reinforcement shall be deformed or smooth bars conform in properties to ASTM A 615 Grade 40. Unless otherwise shown on the plans all reinforcing steel shall be deformed bars, all dowel bars at joints shall be smooth bars, and all curb dowels shall be deformed bars.

B. Greenstreak two component speed dowel system can be used at construction joints pending engineer approval. Product submittal required for approval.

C. Greenstreak two component speed load system can be used at expansion joints pending engineer approval. Product submittal required for approval.

PART 7 - EXECUTION

7.01 GENERAL

A. The curb and sidewalk pavement shall be constructed to the lines and grades shown on the drawings.

7.02 PAVEMENT

A. PREPARATION OF SUBGRADE
1. The subgrade shall be a previously prepared subgrade, stabilized if required, compacted to a minimum of 95% standard density ASTM D-698, and graded to the required section and grades shown on the drawings and as specified.
2. Rolling and sprinkling shall be performed to maintain the specified moisture content of the subgrade as necessary prior to placing the concrete curbs.
3. Refer to Section 32 22 13 Site Grading for applicable specifications for materials and placement.

B. PLACING AND REMOVING FORMS
1. Forms shall be of wood or metal, properly treated to insure concrete does not adhere to the forms, straight, clean, free from warp or defect, and of sufficient depth.
2. The forms shall be so placed that when placed each form section will be firmly in contact for its whole length and base width and exactly at the established grade.
3. Any subgrade under the forms below established grade shall be corrected using suitable material, placed, sprinkled, and rolled.
4. Forms shall be securely staked and tightly jointed and keyed to prevent displacement.
5. Sufficient stability of forms to support equipment operated thereon and to withstand its vibration without springing shall be required.
6. Forms shall remain in place not less than 24 hours after concrete is placed.

C. JOINTS IN CONCRETE PAVEMENT
1. Shall be constructed in the pavement slab at locations and according to details as shown on the drawings. Stakes, braces, brackets or other devices shall be used as necessary to keep the entire joint assembly in true vertical and horizontal position.
2. When prefabricated plastic strips are used to form joints, they shall be placed after the concrete surface has been leveled and before the finishing is completed. The strips shall be of a type specifically manufactured for the purpose of forming joints in concrete pavement and to the dimensions as required to form the specified joints. The strips shall be removed after the concrete has set per the manufacturer's recommendations. Any blemishes caused by the removal of the strips shall be repaired immediately using approved methods.

D. Tie Bars and Load Transmission Devices shall be accurately placed and held securely (parallel to pavement surface and perpendicular to joint) during placing and finishing of pavement.

E. Expansion Joints shall be constructed with board filler and sealed at top. Board filler must be perpendicular to plane of concrete slab. Alignment of joint shall not vary more than 1/4 inch in 10 feet.

F. Reinforcing Steel shall be accurately placed as shown on drawings and secured in

place. Each bar intersection shall be tied. All bars shall be supported on steel or plastic bar chairs. Laps shall be a minimum of ten (10) inches and tied. Wire fabric may not be used in vehicular pavement.

G. CONCRETE PLACING AND FINISHING

1. Concrete not placed as herein prescribed within 90 minutes after mixing shall be rejected.
2. Concrete shall not be placed when temperature is below 40 degrees F and falling, but may be placed when the temperature is above 35 degrees F and rising, the temperature being taken in the shade and away from artificial heat.
3. Concrete shall not be placed before the time of sunrise, and shall not be placed later than will permit the finishing of the pavement during sufficient natural light.
4. Concrete shall be consolidated by a mechanical vibrator to remove all voids. Special care shall be exercised in placing and spading concrete against forms and at all joints to prevent the forming of honeycombs and voids and to prevent displacement of steel reinforcement and load transmission devices.
5. The concrete shall be struck off with an approved strike-off screed to such elevation that when consolidated and finished, the surface of pavement shall conform to the required section and grade. In no case shall the maximum ordinate from a 10 foot straight edge to the pavement be greater than 1/8 inch.
6. The strike template shall be moved forward with a combined transverse and longitudinal motion in the direction the work is progressing, maintaining the template in contact with the forms, and maintaining a slight excess of material in front of the cutting edge.
7. After completion of a strike-off, consolidation and transverse screeding, a handoperated longitudinal float shall be operated to test and level the surface to the required grade.
8. Workmen shall operate the float from approved bridges riding on the forms and spanning the pavement. The longitudinal float shall be held in contact with the surface and parallel to the center line, and operated with short longitudinal strokes while being passed from one side of the pavement to the other. If contact with the pavement is not made at all points, additional concrete shall be placed if required, and screeded, and the float shall be used to produce a satisfactory surface. After a section has been smoothed so that the float maintains contact with the surface at all points in being passed from one side to the other, the bridges may be moved forward half the length of the float, and the operations repeated.
9. After completion of the straightedge testing, a pass with a burlap drag shall be made as soon as construction operations permit and before the water sheen has disappeared from the surface. This shall be followed by as many passes of the drag as required to produce the desired surface texture.
10. After completion of dragging and about the time the concrete becomes hard, the edge of the slab and joints shall be left smooth and true to line.

H. CURING

1. Concrete pavement shall be cured by protecting it against excessive loss of moisture for a period of not less than 72 hours from the beginning of curing operation.

2. Immediately after finishing operations have been completed, the entire surface of the newly laid concrete shall be covered and cured in accordance with the requirements of "Membrane Curing," TxDOT Item 360.4I.
3. Special care should be exercised to keep spraying curing compound out of pavement joints.

7.03 CURBS

A. DOWELLED ON CURB

1. After curing the concrete pavement, doweled on curbs, using secure forms shall be constructed to the size shown on the plans.
2. Dowels may be placed in the pavement slab before the concrete has set, or placed in drilled holes using epoxy adhesive to secure the bars in place.
3. Pavement joints shall extend through the curbs. Expansion joint material shall be the same thickness, type and quality as specified for the pavement.
4. When sawed joints are provided, the placement of curb shall be delayed until all transverse joints are sawed.
5. Weakened plane joints shall be formed by inserting an asphaltic board strip cut to conform to the shape of the curb.
6. All joints should be tool finished after sufficient curing of the concrete.
7. The concrete, reinforcement and curing of the curbs shall conform to the requirements specified for the concrete pavement.
8. In finishing the curbs, a thin coating of mortar shall be worked into the exposed face of the curb in order to obtain a brush finish free of all blemishes and form or tool marks.
9. Curbs shall have a straightness tolerance of 1/8 inch in 10 feet, measured longitudinally along the back and face of the curb.
10. The top of the curb shall not vary vertically in height more than 1/8" when measured up from the concrete pavement.

B. MONOLITHIC CURBS AND CURB AND GUTTER

1. Monolithic curb and curb and gutter shall conform to the specifications for doweled on curb and the details shown on the plans.
2. Monolithic curb and curb and gutter shall be constructed after final grading of the subgrade and before placement of the base material.
3. These curbs shall be cured for at least 72 hours and shall be properly backfilled behind the curb by hand tamping to 95% standard proctor density ASTM D 698 before placing the base material.

7.04 APPLICATION OF JOINT SEALING COMPOUND

A. Joints shall be thoroughly cleaned of loose scale, dirt, dust and curing compound. When necessary, existing joint material shall be removed to the depth as shown on the plans.

B. Joints shall be filled to the full depth of the joint opening. Pouring shall be done in a neat and workman like manner to give satisfactory results. Sufficient joint sealer shall

be poured into the joints so that upon the completion of the work the surface of sealer within the joint shall be 1/4" above top of the pavement surface.

7.05 TESTS

A. CONCRETE TEST SPECIMENS
1. Test cylinders for compressive strength shall be taken and cured in accordance with ASTM C 31 and tested in accordance with ASTM C 39.
2. At least 3 cylinders shall be made for each day for each 100 c.y. of concrete or fraction thereof, placed.
3. Laboratory technician will prepare concrete test cylinders.

B. TESTING OF CONRETE SURFACE
1. After finishing is complete and while the concrete is still workable, the surface shall be tested for trueness with an approved 10' steel straightedge.
2. The straightedge shall be operated from the side of the pavement placed parallel to the pavement center line and passed across the slab to reveal any high spots or depressions.
3. The straightedge shall be advanced along the pavement in successive stages of not more than 1/2 its length. A tolerance of 1/8" in 10' must be met.
4. Any correction of the surface required shall be accomplished by adding concrete if required and by operating the longitudinal float over the area.
5. The surface test with the straightedge shall then be repeated.

7.06 OPENING PAVEMENT TO TRAFFIC

A. The pavement shall be closed to all traffic, including vehicles of the Contractor, until the concrete is at least 7 days old or has attained a minimum average of 3000 psi compressive strength.

B. Any damage to the pavement prior to acceptance by the Owner shall be repaired by the Contractor at no extra cost to the Owner.

C. This does not relieve the Contractor from the normal liabilities and maintenance responsibilities, implied or otherwise, for the pavement or other items.

END OF SECTION

SECTION 32 16 00

SIDEWALK, CURB AND GUTTER

PART 1 - GENERAL

1.01 DESCRIPTION

A. The work under this Section includes providing all labor, materials, tools, and equipment necessary for furnishing and installing sidewalk, curb, and gutter as shown on the Drawings and Standard Details.

PART 2 - PRODUCTS

2.01 MATERIALS

A. Materials shall conform to the requirements of Section 31 13 13 – Concrete Paving.

B. Synthetic fibers may be substituted for rebar or wire mesh upon approval of the Engineer.

PART 3 - EXECUTION

3.01 METHODS OF CONSTRUCTION

A. Sidewalk, concrete slabs, curb and gutter, and valley gutter shall conform to the applicable requirements of Section 311313 – Concrete Paving, and as shown on the Drawings, shall be used as a curing compound.
   1. The curing compound shall be sprayed on the surface with a low-pressure sprayer immediately following the finishing operation.
   2. The entire surface shall be kept wet for 30 minutes by brooming excess material onto the dry spots or by re-spraying them immediately. No areas on the concrete surface shall be allowed to dry during the initial 30 minute period.
   3. As the curing compound begins to dry into the surface and becomes slippery, lightly sprinkle the surface with water to aid the penetration of the curing compound and to bring any alkali to the surface.
   4. After 30 to 40 minutes, squeegee or broom the surface to remove any excess curing compound and alkali or other impurities brought to the surface. All work required for the application of the curing compound shall conform to the manufacturer's recommendations.

B. All exposed or unprotected edges of sidewalks shall be tooled to a radius of not more than one-half inch. After floating, trowel finish the entire surface using steel trowels. Final finish shall be obtained by brooming the surface, including the tooled edge, to a gritty finish after all free moisture has disappeared from the surface. Sprinkling of cement or sand for blotting will not be permitted.

C. Concrete curb and gutter, curb, and valley gutter shall be integral, one course construction, and molded in place on a gravel subgrade. The face forms of the integral curb and gutter shall be removed as soon as practicable. The top and inclined surface shall then be worked with float or steel trowels to a gritty finish.

D. Glazing, sprinkling of sand or cement, or blotting will not be permitted. Both front and back edges shall be tooled to a radius of one-half inch.

E. Use of monolithic curb and gutter machines will be permitted only on the written approval of the Engineer. Mortar may be added to the curb machine in a quantity approved by the Engineer.

F. Expansion joints shall be placed at 30-foot, maximum, intervals along all structures and about all features that project into, through, or against the concrete. An expansion joint shall be constructed at the intersection of sidewalks, between sidewalk crossings and sidewalks and at the beginning and end of curb returns. Expansion joints shall not be placed between the sidewalk and the curb.

G. Expansion join material shall conform to the requirements of AASHTO M 213. This material shall extend the full width of the structure and shall be cut to such dimensions that the base of the expansion joint shall extend to the subgrade and the top shall be depressed not less than one-quarter inch nor more than one-half inch below the finished surface of the concrete. The material shall be one piece in the vertical dimension and shall be securely fastened to the existing concrete face against which fresh concrete is to be poured.

H. Transverse contraction joints, cut to a depth of one inch prior to the final set of the concrete, shall be tooled in the sidewalk at intervals approximately equal to the width of the sidewalk, and at ten foot intervals in the curb and gutter. Where the sidewalk adjoins the curb (parallel to it), contraction joints in the sidewalk and curb shall be made to match where practicable.

I. The top and face of the finished curb shall be true and straight and the top surface of curbs shall be of uniform width, free from lumps, sags, or other irregularities. When a straightedge 10 feet long is laid on the top or face of the curb, or on the surface of gutters, the surface shall not vary more than 0.02 foot from the edge of the straightedge except at grade changes or curves. All discolored concrete shall be cleaned at the Contractor's expense. The concrete may be cleaned by abrasive blast cleaning or other methods approved by the Engineer. Repairs shall be made by removing and replacing the entire unit between scoring lines or joints.

J. Sidewalks at driveway approaches shall have a minimum thickness of six (6) inches.

END OF SECTION

SECTION 32 17 13 - CONCRETE WHEEL STOPS

PART 1 – GENERAL

1.01 SUMMARY

A. Section Includes: Precast Concrete Wheel Stops.

B. Related Requirements: Sections 32 13 13 Concrete Paving, 09 91 00 Painting, and 10 14 00 Signage.

1.02 SUBMITTALS

A. Submit shop drawings, product data.

1.03 QUALITY ASSURANCE:

A. Comply with governing regulations and codes. Provide products of acceptable manufacturers which have been in satisfactory use in similar service for three years. Use experienced workers. Deliver, handle and store in accordance with manufacturer's instructions and safety recommendations.

PART 2 – PRODUCTS

2.01 MATERIALS

A. Wheel Stops: Unless otherwise indicated on drawings, standard reinforced precast concrete type, 6 inches high x 6 feet long; provide 2 vertical steel rod anchors per stop.

B. Provide all hardware, fasteners, anchors, accessories etc. as required for a complete installation. All hardware shall be non-corroding.

PART 3 – EXECUTION

3.01 INSTALLATION

A. Install materials and systems in accordance with manufacturer's instructions and approved submittals. Install materials and systems in proper relation to adjacent construction and with uniform appearance. Coordinate with work of other sections.

B. Install properly aligned and securely anchored. Provide dowels cast into concrete paving, or grouted securely into drilled holes.

C. Restore damaged finishes. Clean and protect work from damage.

END OF SECTION 32 17 13

SECTION 32 17 23

PAVEMENT MARKING MATERIALS

PART 1 – GENERAL

1.01 SCOPE OF WORK

A. This Section pertains to the application of pavement marking as indicated on the drawings and as specified herein.

1.02 APPLICABLE PUBLICATIONS

A. Drawings and general provisions of the Contract, including General and Supplemental Conditions and Division 1 Specifications apply to this section.

B. American Association of State Highway and Transportation Officials (AASHTO): M248, Standard Specification for Ready-Mixed White and Yellow Traffic Paints.

1.03 PROJECT CONDITIONS

A. The Contractor shall provide adequate public protection at all times, by erecting fences, barricades, and etc., as necessary.

B. All work shall be in accordance with the Texas Manual on Uniform Traffic Control Devices latest edition.

C. Proceed with pavement marking only on clean, dry surfaces and at a minimum ambient or surface temperature of 40 deg F (4 deg C) for oil-based materials, 50 deg F (10 deg C) for water-based materials, and not exceeding 95 deg F (35 deg C).

1.04 DELIVERY, STORAGE, AND HANDLING

A. Deliver pavement-marking materials to Project site in original packages with seals unbroken and bearing manufacturer's labels containing brand name and type of material, date of manufacture, and directions for storage.

B. Store pavement-marking materials in a clean, dry, protected location within temperature range required by manufacturer. Protect stored materials from direct sunlight.

PART 2 – PRODUCTS

2.01 PRODUCTS

A. Materials shall consist of paint and glass beads. Paint shall conform to AASHTO M248, Standard Specification for Ready-Mixed White and Yellow Traffic Paints.

PART 3 – EXECUTION

3.01 APPLICATION

A. Do not apply pavement-marking paint until layout, colors, and placement have been verified with Owner.

B. Allow paving to age for 30 days before starting pavement marking.

C. The pavement surface to receive the striping shall be thoroughly cleaned of all dirt, organic growth, oil, grease, or other materials that will prevent adhesion of the paint to the roadway surface.

D. Paints shall be applied by brush, spray, or flow methods to clean and dry surfaces with surface temperature 50 F or above.
   1. Paint shall have net film thickness of 0.015 inches with a uniform cross section. Minimum thickness of 0.010 inches measured in the dry condition prior to adding any glass reflective spheres.
   2. Paint shall be applied no sooner than 14 days after seal coat has been applied.
   3. Paint shall be applied in one (1) coat.
   4. Paint shall be applied as shown on drawings.
   5. Glass spheres or reflectorized granules shall be applied, before the paint sets or dries, evenly at a rate of 6 pounds of glass spheres or 1.7 pounds of reflectorized granules per gallon of paint.

END OF SECTION

SECTION 32 20 10 - CONCRETE SIDEWALKS

PART 1 – GENERAL

1.01 SECTION INCLUDES

A. Reinforced concrete sidewalks.

B. Wheelchair ramps.

C. Reinforced slope paving.

D. Detectable Warnings

1.02 REFERENCES

A. ASTM C 31 - Standard Practice for Making and Curing Concrete Test Specimens in Field.

B. ASTM C 39 - Standard Test Method for Compressive Strength of Cylindrical Concrete Specimens.

C. ASTM C 42 - Test Method for Obtaining and Testing Drilled Cores and Sawed Beams of Concrete.

D. ASTM C 138 - Standard Test Method for Unit Weight, Yield, and Air Content (Gravimetric) of Concrete.

E. ASTM C 143 - Standard Test Method for Slump of Hydraulic Cement Concrete.

F. ASTM C 172 - Standard Practice for Sampling Freshly Mixed Concrete.

G. ASTM D 698 - Standard Test Methods for Laboratory Compaction Characteristics of Soil Using Standard Effort (12,400 ft-lbf/ft3 (600 kN-m/m3).

H. Texas Accessibility Standards of Architectural Barriers Act, Article 9102, Texas Civil Statues.

1.03 SUBMITTALS

A. Submit certified testing results and certificates of compliance.

PART 2 – PRODUCTS

2.01 MATERIALS

A. Concrete: Conform to material and proportion requirements for concrete of Section 31 13 13, Portland Cement Concrete Pavement.

B. Reinforcing Steel: Conform to material requirements of Section 31 13 13, Portland Cement Concrete Pavement, for reinforcing steel. Use No. 3 reinforcing bars.

C. Preformed Expansion Joint Material: Conform to material requirements for preformed expansion joint material of City of Houston - Concrete Pavement Joints.

D. Expansion Joint Filler: Conform to material requirements for expansion joint material of City of Houston - Concrete Pavement Joints.

E. Forms: Use straight, unwarped wood or metal forms with nominal depth equal to or greater than proposed sidewalk thickness. The use of 2 inch by 4 inch lumber as forms will not be allowed.

F. Sand Bed: Conform to material requirements for bank run sand of Section 31 23 00, Utility Backfill Materials.

G. Sodding: Conform to material requirements for sodding.

PART 3 – EXECUTION

3.01 REPLACEMENT

A. Replace sidewalks and slope paving which are removed or damaged during construction with thickness and width equivalent to one removed or damaged, unless otherwise shown on Drawings. Finish surface (exposed aggregate, brick pavers, etc.) to match existing sidewalk.

B. Provide replaced and new sidewalks with wheelchair ramps when sidewalk intersects curb at street or driveway.

3.02 PREPARATION

A. Identify and protect utilities which are to remain.

B. Protect living trees, other plant growth, and features designated to remain.

C. Conduct clearing and grubbing operations in accordance with Section 33 10 00, Clearing and Grubbing.

D. Excavate subgrade 6 inches beyond outside lines of sidewalk. Shape to line, grade and cross section. For soils with plasticity index above 40 percent, stabilize soil with lime in accordance with Section 31 23 13, Lime-Stabilized Subgrade. Compact subgrade to a minimum of 90 percent maximum dry density at optimum to 3 percent above optimum moisture content, as determined by ASTM D 698.

E. Immediately after subgrade is prepared, cover with compacted sand bed to depth as shown on Drawings. Lay concrete when sand is moist but not saturated.

3.03 PLACEMENT

A. Setting Forms: Straight, unwarped wood or metal forms with nominal depth equal to or greater than proposed sidewalk thickness. Use of 2 by 4's as forms will not be allowed. Securely stake forms to line and grade. Maintain position during concrete placement.

B. Reinforcement:

1. Install reinforcing bars.
2. Install reinforcing steel as shown on the drawings. Lay longitudinal bars in walk continuously, except through expansion joints.
3. Use sufficient number of chairs to support reinforcement in manner to maintain reinforcement in center of slab vertically during placement.
4. Drill dowels into existing paving, sidewalk and driveways, secure with epoxy, and provide headers as required.
5. Use sufficient number of chairs for steel reinforcement bars to maintain position of bars within allowable tolerances. Place reinforcement as shown on Drawings. In plane of steel parallel to nearest surface of concrete, bars shall not vary from plan placement by more than 1/12 of spacing between bars. In plane of steel perpendicular to nearest surface of concrete, bars shall not vary from plan placement by more than 1/4 inch.

C. Expansion Joints: Install expansion joints with load transfer units at intervals not to exceed twenty feet on center each way.

D. Place concrete in forms to specified depth and tamp thoroughly with "jitterbug" tamp, or other acceptable method. Bring mortar to surface.

E. Strike off to smooth finish with wood strike board. Finish smoothly with wood hand float. Brush across sidewalk lightly with fine-haired brush.

F. Apply coating to wheelchair ramp with contrasting color in accordance with Texas Accessibility Standards.

G. Unless otherwise indicated on Drawings, mark off sidewalk joints 1/8 inch deep, at spacing equal to width of walk. Use joint tool equal in width to edging tool.

H. Finish edges with tool having 1/4 inch radius.

I. After concrete has set sufficiently, refill space along sides of sidewalk to one-inch from top of walk with suitable material. Tamp until firm and solid, place sod as applicable. Dispose of excess material in accordance with local - Waste Material Disposal requirement.

J. Submit expansion and tooled joint layout for architect's review prior to placement.

3.04 REQUIREMENTS

A. Sidewalk finish shall be such that the sidewalk is not slick when wet. Coefficient of friction shall fall within the recommended OSHA requirements.

B. Exterior sidewalks shall be poured separately from building slabs to allow for future renovation, demolition, and expansion.

C. Sidewalks shall be installed so that a positive slope away from the building is achieved.

D. If concrete admixtures are used, they shall not interfere with the adherence of traffic paint or other post applied markings.

E. New pavement areas shall be barricaded until they are completely cured and ready to receive traffic. Contractor shall be responsible for replacing any newly painted concrete that receives graffiti or damage during the curing process.

F. Permission must be obtained from the Owner to rinse mix trucks on site. Runoff shall not enter storm sewer system.

3.05 CURING

A. Conform to requirements of Section 31 13 13, Portland Cement Concrete Pavement.

3.06 FIELD QUALITY CONTROL

A. Testing will be performed under provisions of Testing Laboratory Services.

B. Compressive Strength Test Specimens: Four test specimens for compressive strength test will be made in accordance with ASTM C 31 for each 30 cubic yards or less of sidewalk that is placed in one day. Two specimens will be tested at 7 days. Remaining two specimens will be tested at 28 days. Specimens will be tested in accordance with ASTM C 39. Minimum compressive strength: 2500 psi at 7 days and 3000 psi at 28 days.

C. Yield test for cement content per cubic yard of concrete will be made in accordance with ASTM C 138. When cement content is found to be less than that specified per cubic yard, reduce batch weights until amount of cement per cubic yard of concrete conforms to requirements.

D. If the Contractor places concrete without notifying the laboratory, the Owner will have the concrete tested by means of core test as specified in ASTM C 42. When concrete does not meet specification, cost of test will be deducted from payment.

E. Sampling of fresh concrete shall be in accordance with ASTM C 172.

F. Take slump tests when cylinders are made and when concrete slump appears excessive.

G. Concrete shall be acceptable when average of two 28 day compression tests is equal to or greater than minimum 28 day strength specified.

H. If either of two tests on field samples is less than average of two tests by more than 10 percent, that entire test shall be considered erratic and not indicative of concrete strength. Core samples will be required of in-place concrete in question.

I. If 28 day laboratory test indicates that concrete of low strength has been placed, test concrete in question by taking cores as directed by Project Manager. Take and test at least three representative cores as specified in ASTM C 42 and deduct cost from payment due.

3.07 NONCONFORMING CONCRETE

A. Remove and replace areas that fail compressive strength tests, with concrete of thickness shown on Drawings.

B. Replace nonconforming sections at no additional cost to Owner.

3.08 PROTECTION

A. Maintain newly place concrete in good condition until completion of Work.

B. Replace damaged areas.

END OF SECTION 32 20 10

SECTION 32 31 13 – CHAIN LINK FENCING

PART 1 GENERAL

1.1 RELATED SECTIONS

1. Section 01 33 00 - Submittal Procedures.
2. Section 03 30 00 - Cast-in-Place Concrete.
3. Section 09 91 13 - Exterior Painting.

1.2 REFERENCES

1. American Society for Testing and Materials (ASTM).
    1. ASTM A53/A53M, Standard Specification for Pipe, Steel, Black and Hot-dipped, Zinc-Coated Welded and Seamless.
    2. ASTM A90/A90M, Standard Test Method for Weight Mass of Coating on Iron and Steel Articles with Zinc or Zinc-Alloy Coatings.
    3. ASTM A116, Standard Specification for Metallic-Coated, Steel-Woven Wire Fence Fabric.
    4. ASTM A121, Standard Specification for Zinc-Coated (Galvanized) Steel Barbed Wire.
    5. ASTM A123/A123M, Zinc (Hot-Dip Galvanized) Coatings on Iron and Steel.
    6. ASTM A641/A641M, Standard Specification for Zinc-coated (Galvanized) Carbon Steel Wire.
    7. A653/A653M, Standard Specification for Steel Sheet, Zinc-Coated (Galvanized) or Zinc-Iron Alloy-Coated (Galvanized) by the Hot-Dip Process.
2. Canadian General Standards Board (CGSB).
    1. CAN/CGSB-138.1, Fabric for Chain Link Fence.
    2. CAN/CGSB-138.2, Steel Framework for Chain Link Fence.
    3. CAN/CGSB-138.3, Installation of Chain Link Fence.
    4. CAN/CGSB-138.4, Gates for Chain Link Fence.
    5. CAN/CGSB-1.181, Ready-Mixed Organic Zinc-Rich Coating.
3. Canadian Standards Association (CSA).
    1. CSA-A23.1/A23.2, Concrete Materials and Methods of Concrete Construction/Methods of Test for Concrete.
    2. CAN/CSA-G164, Hot Dip Galvanizing of Irregularly Shaped Articles.
    3. CAN/CSA-A3000, Cementitious Materials Compendium. Includes:

1.3 SUBMITTALS

1. Submit WHMIS MSDS – Material Safety Data Sheets.

2. Submit manufacturer's data sheets including:

    1. Fence fabric gauge and finish.
    2. Post and rail dimension and finish.
    3. Gate frame dimension and finish.
    4. Required fittings and hardware.

PART 2 PRODUCTS

2.1 MATERIALS

1. Concrete mixes and materials: in accordance with Section 03 30 00- Cast-in-Place Concrete.

    1. Nominal coarse aggregate size: 20 mm.
    2. Compressive strength: 20 MPa minimum at 28 days.

2. Chain-link fence fabric: to CAN/CGSB-138.1.

    1. Type 1, Class A, medium style.
    2. Height of fabric: as indicated.

3. Posts, braces and rails: to CAN/CGSB-138.2, galvanized steel pipe. Dimensions as indicated.

4. Bottom tension wire: to CAN/CGSB-138.1, Table 2 single strand, galvanized steel wire, 5 mm diameter.

5. Tie wire fasteners: to CAN/CGSB-138.1, Table 2 (steel wire), single strand, galvanized steel wire confirming to requirements of fence fabric, 5 mm diameter.

6. Tension bar: to A653/A653M, 5 x 20 mm minimum galvanized steel.

7. Tension bar brands: 3 x 20 mm minimum galvanized steel or 5 x 20 mm minimum aluminum.

8. Gates: to CAN/CGSB-138.4.

9. Gate frames: to ASTM A53/A53M, galvanized steel pipe, standard weight 45 mm outside diameter pipe for outside frame, 35mm outside diameter pipe for interior bracing.

    1. Fabricate gates as indicated with electrically welded joints, and hot-dip galvanized after welding.
    2. Fasten fence fabric to gate with twisted selvage at top.
    3. Furnish gates with galvanized malleable iron hinges, latch and latch catch with provision for padlock which can be attached and operated from either side of installed gate.
    4. Furnish double gates with chain hook to hold gates open and centre rest with drop bolt for closed position.

10. Fittings and hardware: to CAN/CGSB-138.2, cast aluminum alloy, galvanized steel or malleable or ductile cast iron.

1. Tension bar bands: 3 x 20 mm minimum galvanized steel or 5 x 20 mm minimum aluminum.
2. Post caps to provide waterproof fit, to fasten securely over posts and to carry top rail.
3. Overhang tops to provide waterproof fit, to hold top rails and an outward inward projection to hold barbed wire overhang.
4. Provide projection with clips or recesses to hold 3 strands of barbed wire spaced 100 mm apart.
5. Projection of approximately 300 mm long to project from fence at 45° above horizontal.
6. Turnbuckles to be drop forged.

11. Organic zinc rich coating: to CAN/CGSB-1.181.

12. Barbed wire: 2 mm diameter galvanized steel wire to ASTM A121, 4-point barbs 125 mm spacing.

13. Grounding rod: 16 mm diameter copper well rod, 3 m long.

2.2 FINISHES

1. Galvanizing:
   1. For chain link fabric: to CAN/CGSB-138.1, Grade2.
   2. For pipe: 550 g/m^2 minimum to ASTM A90.
   3. For barbed wire: to ASTM A121, Class 2.
   4. For other fittings: to CAN/CSA-G164.

PART 3 EXECUTION

3.1 GRADING

1. Remove debris and correct ground undulations along fence line to obtain smooth uniform gradient between posts.
   1. Provide clearance between bottom of fence and ground surface of 30 mm to 50 mm.

3.2 ERECTION OF FENCE

1. Erect fence along lines as indicated and as directed by Owner's Representative and in accordance with CAN/CGSB-138.3.

2. Excavate post holes 1200 mm depth x 300 mm diameter by methods approved by Owner's Representative.

3. Space line posts 3 m apart, measured parallel to ground surface.

4. Space straining posts at equal intervals not exceeding 150 m if distance between end or corner posts on straight continuous lengths of fence over reasonably smooth grade is greater than 150 m.

5. Install additional straining posts at sharp changes in grade and where directed by Owner's Representative.

6. Install corner post where change in alignment exceeds 10°.

7. Install end posts at end of fence and at buildings. Install gate posts on both sides of gate openings.

8. Place concrete in post holes then embed posts into concrete to minimum 900 mm depth.

    1. Extend concrete 50 mm above ground level and slope to drain away from posts.
    2. Brace to hold posts in plumb position and true to alignment and elevation until concrete has set.

9. Do not install fence fabric until concrete has cured minimum of 5 days.

10. Install brace between end and gate posts and nearest line post, placed in centre of panel and parallel to ground surface.

    1. Install braces on both sides of corner and straining posts in similar manner.

11. Install overhang tops and caps.

12. Install top rail between posts and fasten securely to posts and secure waterproof caps and overhang tops.

13. Install bottom tension wire, stretch tightly and fasten securely to end, corner, gate and straining posts with turnbuckles and tension bar bands.

14. Lay out fence fabric. Stretch tightly to tension recommended by manufacturer and fasten to end, corner, gate and straining posts with tension bar secured to post with tension bar bands spaced at 300 mm intervals.

    1. Knuckled selvedge at bottom.
    2. Twisted selvedge at top.

15. Secure fabric to top rails, line posts and bottom tension wire with tie wires at 450 mm intervals.

    1. Give tie wires minimum two twists.

16. Install barbed wire strands and clip securely to lugs of each projection.

17. Install grounding rods as indicated.

3.3 INSTALLATION OF GATES

1. Install gates in locations as indicated.

2. Level ground between gate posts and set gate bottom approximately 40 mm above ground surface.

3. Determine position of centre gate rest for double gate. Cast gate rest in concrete as directed. Dome concrete above ground level to shed water.

4. Install gate stops where indicated.

3.4 TOUCH UP

1. Clean damaged surfaces with wire brush removing loose and cracked coatings. Apply two coats of organic zinc-rich paint to damaged areas in accordance with Section 09 91 13 – Exterior Painting. Pre-treat damaged surfaces according to manufacturers' instructions for zinc-rich paint.

3.5 CLEANING

1. Clean and trim areas disturbed by operations. Dispose of surplus material as directed by Owner’s Representative.

END OF SECTION 32 31 13

SECTION 33 10 00

WATER DISTRIBUTION

PART 1 - GENERAL

1.01 SCOPE OF WORK

A. This Section specifies the requirements for furnishing and installing water lines, laterals, stubs, and appurtenances for both potable and non-potable water distribution systems. The pipe shall be of the size, type and location, and to the lines, grades and elevations shown on the plans and constructed in accordance with these specifications.

1.02 RELATED WORK SPECIFIED ELSEWHERE

A. Section 31 23 33 Trenching, Backfilling, and Compaction

B. Section 31 23 34 Trench Safety

1.03 APPLICABLE PUBLICATIONS

A. The following publications of the latest issues listed below, but referred to thereafter by basic designation only, form a part of these specifications to the extent indicated by reference thereto:

1. American Water Works Association (AWWA)
   a. C 500 AWWA Standard for Metal-Seated Gate Valves for Water Supply Service.
   b. C 900 AWWA Standard for Polyvinyl Chloride (PVC) Pressure Pipe and Fabricated Fittings, 4" through 12", for Water Transmission and Distribution.
   c. C 151 AWWA Standard for Ductile Iron Pipe, Centrifugally Cast, for Water
   d. C 110 AWWA Standard for Ductile-Iron and Gray-Iron Fittings.
   e. C 105 AWWA Standard for Polyethylene Encasement for Ductile-Iron Pipe Systems.
   f. C 104 AWWA Standard for Cement-Mortar Lining for Ductile-Iron Pipe and Fittings
   g. C 701-70 AWWA Standard for Cold-Water Meters-Turbine Type, for Customer Service
   h. C 703-70 AWWA Standard for Cold Water Meters Fire Service Type
2. American Society for Testing and Materials Standards (ASTM)
   a. F 645 - Standard Guide for Selection, Design, and Installation of Thermoplastic Water-Pressure Piping Systems
3. National Fire Protection Association (NFPA)
   a. NFPA 24 - Standard for the Installation of Private Fire Service Mains and Their Appurtenances
   b. NFPA 70 – National electric code
4. National Sanitation Foundation International (NSF)
   a. NSF 14 Plastics Piping System Components and Related Materials
   b. NSF 61 Drinking Water System Components - Health Effects

1.04 PROJECT/SITE CONDITIONS

A. Interruption of Existing Water-Distribution Service: Do not interrupt service to facilities occupied by Owner or others unless permitted and then only after arranging to provide temporary water-distribution service.
   1. Do not proceed with interruption of water-distribution service without prior approval and coordination with local municipal water supplier.

1.05 SUBMITTALS

A. Product Data: For each type of product indicated.

B. Shop Drawings: Detail precast concrete vault assemblies and indicate dimensions, method of field assembly, and components.

C. Coordination Drawings: For piping and specialties including relation to other services in same area, drawn to scale. Show piping and specialty sizes and valves, meter and specialty locations, and elevations.

D. Field quality-control test reports.

1.06 DEFINITIONS

A. LLDPE: Linear, low-density polyethylene plastic.

B. PE: Polyethylene plastic.

C. PP: Polypropylene plastic.

D. PVC: Polyvinyl chloride plastic.

1.07 QUALITY ASSURANCE

A. REGULATORY REQUIREMENTS OF POTABLE WATER SYSTEMS:
   1. Comply with requirements of utility company supplying water. Include tapping of water mains and backflow prevention.
   2. Comply with standards of authorities having jurisdiction for potable-water-service piping, including materials, installation, testing, and disinfection.
   3. Comply with standards of authorities having jurisdiction for fire-suppression water-service piping, including materials, hose threads, installation, and testing.

B. REGULATORY REQUIREMENTS FOR NON-POTABLE WATER SYSTEMS:
   1. The system shall be comprised of purple components. Use purple colored pipe, Pantone 522 embossed or integrally stamped/marked in English and in Spanish “CAUTION RECLAIMED WATER DO NOT DRINK” and “AGUA DE RECUPERACIÓN - NO BEBER”.

2. A minimum of an eight inch by eight inch sign, in English and Spanish, is prominently posted on/in the area that reads “Reclaimed Water – Do not drink” and "AGUA DE RECUPERACIÓN - NO BEBER" on the storage tank of such non-potable system if within the construction site.

C. Piping materials shall bear label, stamp, or other markings of specified testing agency.

D. Electrical Components, Devices, and Accessories: Listed and labeled as defined in NFPA 70, Article 100, by a testing agency acceptable to authorities having jurisdiction, and marked for intended use.
1. Comply with ASTM F 645 for selection, design, and installation of thermoplastic water piping.
2. Comply with FMG's "Approval Guide" or UL's "Fire Protection Equipment Directory" for fire-service-main products.

PART 2 - PRODUCTS

2.01 PIPE

A. For water line construction 9 feet or more from any existing or proposed sanitary sewer, all materials and equipment shall be:
1. New, or best grade and standard manufacture.
2. PVC pipe and joints shall conform to AWWA C-900, latest edition, schedule 40 for 150 PSI rated systems and schedule 80 for 200 PSI rated systems.
3. Ductile iron pipe shall conform to AWWA C 151, pipe class per Table 51.1, latest edition, standard outside coating with cement mortar lining to AWWA C 104 standards. All ductile iron pipe and fittings shall be wrapped with polyethylene per AWWA C 105.
4. Fittings shall conform to AWWA C 110, latest edition, Pressure Rated 150 psi, 250 psi, 350 psi as directed by the engineer wrapped with polyethylene per AWWA C 105.

B. For construction within 9 feet of any existing or proposed sanitary sewer and all water services, all materials and equipment shall be:
1. New, or best grade and standard manufacture.
2. Ductile iron pipe shall conform to AWWA C 151, latest edition, standard outside coating with cement mortar lining to AWWA C104 standards. Wrap pipe with 8 mil polyethylene.
3. PVC pipe and joints shall conform to AWWA C-900 - 200 psi pressure pipe.
4. Fittings shall conform to AWWA C 110, latest edition, Pressure Rated 250 PSI, wrapped with polyethylene per AWWA C 105.

C. For offsets of water mains 6" and larger required to miss conflicts with other lines or objects, steel pipe shall be used meeting the requirements of AWWA 200, Schedule 40.

2.02 VALVES

A. LINE VALVES:
1. Valves shall have a minimum working pressure of not less than 175 PSI.
2. The operating nut shall be 2-inch square and shall have an arrow, cast in the metal, indicating the counter-clockwise direction of opening.
3. Gate valves shall conform to AWWA C 500, latest edition, standard NRS bronze double disk type.
4. Valves shall have push-on or mechanical joint hubs.

B. TAPPING VALVES:
1. Tapping valves shall conform to AWWA Standard C 500, latest edition, standard NRS bronze double disc type water works valve.
2. The operating nut shall be 2-inch square and shall have an arrow, cast in the metal, indicating the counter-clockwise direction of opening.
3. Inlet shall be a Class 125 flange with a machined projection.
4. Outlet shall be a standard push-on or mechanical joint.
5. Valves shall have a minimum working pressure of not less than 175 psi.

C. VALVES FOR METER INSTALLATION:
1. Commercial meter valves shall meet the specifications for line valves except that they shall have a hand wheel, Class 125 flanges and shall open counter-clockwise.
2. Fire flow meter valves shall be OS&Y double disc valves (line valves only), Fire Marshall approved, clockwise to close with Class 125 flanges.

2.03 VALVE BOXES

A. Valve boxes shall be installed over each line and tapping valve except as otherwise noted.

B. Lids shall be cast with the word "Water".

C. Valve boxes shall be extension type with screw or locking slide adjustment with flapped base.

2.04 FIRE HYDRANTS

A. Fire hydrants shall be as manufactured by Mueller Company and painted Yellow, or approved equal, AWWA type, No. A 24015, 3 way 5 1/4 inch valve opening, bury as shown to a depth shown, 6 inch MJ shoe, open left, 1 1/2 inch top operating nut, 2 1/2 inch hose coupling, 4 1/2 inch pumper connection with national standard threads.

2.05 METERS

A. All meters and meter boxes shall be of the size shown and meet the specifications of the local governing agency.

2.06 WATER

A. All water used for testing and sterilizing must be supplied by municipal supplies approved by the state's Department of Health.

PART 3 - EXECUTION

3.01 LOWERING/RELOCATING EXISTING WATER LINES

A. Water lines to be lowered/relocated shall not be shut down without prior approval of the local governing agency.

B. Contractor shall install necessary valves so as not to disrupt service outside limits of water lines to be lowered/relocated whether or not indicated on the plans.

C. Whether or not indicated on the plans, the lowered/relocated water line shall have minimum of four (4) feet of cover. Location shall be a minimum distance from existing location as necessary to facilitate construction.

D. If the lowered/relocated water lines are of potable water systems, they shall be required to meet same hydrostatic and sterilization test results as new water lines.

E. Installation of lowered/relocated water lines shall meet the same requirements of new water lines as in paragraph 3.2 below.

3.02 INSTALLATION

A. The interior of the pipe shall be thoroughly cleaned of all foreign matter before lowered into the trench, and shall be kept clean during these operations.

B. Pipes for potable water lines shall not be laid in water, or when trench or weather conditions are unsuitable for work.

C. For potable water line installation, when work is not in progress, open ends of pipes and fittings shall be securely closed so that water, earth, or other substances will not enter the pipes or fittings.

D. All bends, tees, valves, and plugs shall have thrust blocks installed in accordance with the details on the plans. Thrust blocking will be installed such that joints will be accessible for inspection and repair. Concrete used in thrust blocking shall have a compressive strength of at least 3,000 psi.

E. For potable water line installation, when a water line is to be installed such that it will cross over an existing or proposed sanitary sewer, a section of pipe at least 18' long of either ductile iron or PVC pipe C-900 (200 PSI) shall be installed such that it will be centered over the sanitary sewer. Water lines shall in no case be installed below a sanitary sewer.

F. For potable water line installation, when a water line is being installed parallel to a sanitary sewer, a horizontal distance of separation of nine (9) feet (outside to outside)

must be maintained.

G. A minimum clearance of 6" must be maintained between water lines and all other utility lines.

H. When trenches exceed five feet in depth Contractor shall utilize trench safety measures per Section 31 23 34 Trench Safety.

3.03 TESTING

A. All water lines to be installed shall be hydrostatic tested and all potable water lines shall also be sterilized.

B. HYDROSTATIC TEST
1. General
   a. After the pipe has been laid and initial backfill completed, the water line shall be subjected to a hydrostatic pressure of 150 psi. Joints shall remain exposed during testing whenever possible.
   b. The Contractor shall furnish, install, and operate, at his expense, the necessary connections, pumps, meters, and gauges necessary to conduct the test. The meters used in the testing shall be tested, sealed and approved at the Contractor's expense prior to running any test.
2. Procedures
   a. Before applying the specified pressure test, all air shall be expelled from the pipe by slowly filling each valved section of pipe with water and providing taps if necessary to expel trapped air.
   b. All pipe, fittings, and joints will be examined during testing.
   c. Any defective material shall be replaced with sound material and the test repeated until satisfactorily completed and approved.
   d. Allowable leakage shall not exceed 25 gallons per inch of diameter per mile of pipe per 24 hours. Minimum duration of testing for each section shall be 2 hours when joints are exposed and 8 hours when joints are covered.
   e. All visible leaks at exposed joints and all leaks evident on the surface where joints are covered, shall be replaced, regardless of total leakage shown.
   f. Where practicable, pipe lines shall be tested in lengths between valves or plugs of no more than 1500 feet. Contractor must have written approval for test sections greater than 1500 feet.

C. STERILIZATION
1. General
   a. After approved completion of the hydrostatic tests, the water distribution system shall be sterilized before acceptance for domestic operation.
2. Procedures
   a. Distribution system shall be disinfected using chlorine or chlorine compounds added to the water resulting in 50 ppm (parts per million) chlorine.
   b. After the water containing this amount of chlorine has been in contact with the pipe and appurtenances at least 24 hours, the water shall be replaced with water to

be transported normally, and samples of water taken and tested to assure that the disinfection procedure was effective.

c. No main shall be placed in service or accepted until water samples are approved by applicable regulatory agency.
d. Prepare reports of purging and disinfecting activities.

END OF SECTION

SECTION 33 30 00

SANITARY SEWER

PART 1 - GENERAL

1.01 SCOPE OF WORK

A. This Section specifies the requirements for furnishing and placing sanitary sewer pipe, laterals, stubs, and appurtenances. The pipe shall be of the size, type and location, and to the lines, grades and elevations shown on the plans and constructed in accordance with these specifications.

1.02 RELATED WORK SPECIFIED ELSEWHERE

A. Section 31 23 33 Trenching, Backfilling and Compaction

B. Section 31 23 34 Trench Safety

1.03 APPLICABLE PUBLICATIONS

The following publications of the latest issues listed below, but referred to thereafter by basic designation only, form a part of this specification to the extent indicated by the references thereto.

A. AMERICAN SOCIETY FOR TESTING AND MATERIALS STANDARDS (ASTM).
1. C-478 Specification for Precast Reinforced Manhole Sections.
2. D-3034 Specification for Polyvinyl Chloride (PVC) Pipe.
3. C-76 - Specification for Reinforced Concrete Culvert, Storm Drain, and Sewer Pipe.
4. A-48 - Specification for Gray Iron Castings.
5. C-476 - Specification for Grout for Masonry.
6. A-615 - Specification for Deformed and Plain Carbon-Steel Bars for Concrete Reinforcement.
7. C-443 - Specification for Joints for Concrete Pipe and Manholes Using Rubber Gaskets.
8. D-3212 - Specification for Joints for Drain and Sewer Plastic Pipes Using Flexible Elastomeric Seals.
9. F-679 Specification for Poly (Vinyl Chloride) (PVC) Large Diameter Plastic Gravity Sewer Pipe and Fittings.
10. F477 Standard Specification for Elastomeric Seals (Gaskets) for Joining Plastic Pipe
11. A746 Standard Specification for Ductile Iron Gravity Sewer Pipe
12. C150 Standard Specification for Portland Cement
13. C33 Standard Specification for Concrete Aggregates
14. C890 Standard Practice for Minimum Structural Design Loading for Monolithic or Sectional Precast Concrete Water and Wastewater Structures
15. C923 Standard Specification for Resilient Connectors Between Reinforced Concrete Manhole Structures, Pipes and Laterals

16. F1417 Standard Test Method for Installation Acceptance of Plastic Gravity Sewer Lines Using Low-Pressure Air
17. C924 Standard Practice for Testing Concrete Pipe Sewer Lines by Low-Pressure Air Test Method
18. C969 Standard Practice for Infiltration and Exfiltration Acceptance Testing of Installed Precast Concrete Pipe Sewer Lines

B. TEXAS DEPARTMENT OF TRANSPORTATION 2004 STANDARD SPECIFICATIONS FOR CONSTRUCTION OF HIGHWAYS, STREETS AND BRIDGES (TxDOT).
1. Item 465 Manholes and Inlets

C. AMERICAN WATER WORKS ASSOCIATION (AWWA)
1. C110 AWWA Standard for Ductile-Iron and Gray-Iron Fittings
2. C111 AWWA Standard for Rubber-Gasket Joints for Ductile-Iron Pressure Pipe and Fittings
3. C105 Polyethylene Encasement for Ductile Iron Pipe Systems
4. C600 Installation of Ductile Iron Water Mains and Their Appurtenances

D. AMERICAN CONCRETE INSTITUTE(ACI)
1. ACI 318 Building Code Requirements for Structural Concrete

1.04 SUBMITTALS

A. PRODUCT DATA: For the following:
1. Corrosion proof liner selected for protecting concrete pipe from sewer gases. Contractor shall submit data on the selected liner for approval prior to construction.
2. Any Special pipe fittings as detailed in the drawings.
3. Shop Drawings: For the following:
   a. Cast in Place Manholes: Include plans, elevations, sections, details, design calculations, and concrete design-mix report, and frames and covers
4. Coordination Drawings: Show pipe sizes, locations, and elevations. Show other piping in same trench and clearances from sewerage system piping. Indicate interface and spatial relationship between manholes, piping, and proximate structures.
5. Field quality-control test reports.

1.05 DEFINITIONS

A. ABS: Acrylonitrile-butadiene-styrene plastic.

B. FRP: Fiberglass-reinforced plastic.

C. LLDPE: Linear low-density, polyethylene plastic.

D. PE: Polyethylene plastic.

E. PP: Polypropylene plastic.

F. PVC: Polyvinyl chloride plastic.

G. TPE: Thermoplastic elastomer.

1.06 PROJECT CONDITIONS

A. When working with sanitary manholes new or existing, contractor must keep requirements for confined space entries. In all activities, contractor shall work in a safe manner as required by OSHA and other governing criteria.

B. Interruption of Existing Sanitary Sewerage Service: Do not interrupt service to facilities occupied by Owner or others unless permitted under the following conditions and then only after arranging to provide temporary service according to requirements indicated:
   1. If work requires interference with any public sewer systems within or outside of Public Rights of Way or Easements, contractor must obtain prior approval and coordinate with local municipality before commencing work.

1.07 DELIVERY STORAGE AND HANDLING

A. Contractor is responsible for protecting materials per manufactures recommendations
   1. Do not store plastic manholes, pipe, and fittings in direct sunlight.
   2. Protect pipe, pipe fittings, and seals from dirt and damage.
   3. Handle cast in place manholes according to manufacturer's written rigging instructions.

PART 2 - PRODUCTS

2.01 PIPE

A. PVC pipe, 6” to 10” shall conform to ASTM D3034, SDR 26. PVC pipe 12” and 15” shall conform to ASTM D3034, SDR 35. PVC pipe 18” to 27” shall conform to ASTM F679, SDR 35. All diameters shall use bell and spigot ends for gasketed joints with ASTM F 477 elastomeric seals. For sewers up to 12” diameter crossing over or under waterlines, provide minimum 150 psi pressure rated pipe conforming to ASTM D2241 with suitable PVC couplings.

B. Ductile iron pipe shall conform to ASTM A746 and cast iron fittings shall conform to AWWA C110. Gaskets shall conform to AWWA C111, rubber. Wrap pipe with polyethylene per AWWA C 105.

C. Reinforced concrete pipe where approved for sanitary sewers shall conform to ASTM C-76 Class as required for laying condition and shall be lined with a corrosion proof liner satisfactory for protecting concrete from sewer gases. Contractor shall submit data on the selected liner for approval prior to construction.

2.02 JOINTS

A. PVC pipe joints shall conform to ASTM D3212.

B. Ductile iron pipe joints shall be push-on type unless otherwise indicated on the plans.

C. Reinforced concrete pipe joints shall be "Ram-Nek" flexible plastic gaskets or approved equal per ASTM C 443.

2.03 CONCRETE

A. GENERAL: Cast-in-place concrete according to ACI 318, and the following:
   1. Cement: ASTM C 150, Type II.
   2. Fine Aggregate: ASTM C 33, sand.
   3. Coarse Aggregate: ASTM C 33, crushed gravel.
   4. Water
      a. Water used for mixing or curing shall be reasonably clean and free of oil, salt, acid, alkali, sugar, vegetable matter or other substances injurious to the finished product.
      b. Water sources other than the local municipal domestic water supply must be approved by the Owner.
      c. If onsite reclaimed water sources are used, tanks and apprentices must be clearly marked with the words “non-potable” water.

B. Portland Cement Design Mix: 4000 psi minimum, with 0.45 maximum water/cementitious materials ratio.

C. Reinforcement Bars: ASTM A 615, Grade 60 deformed steel.

D. Manhole Channels and Benches: Factory or field formed from concrete. Portland cement design mix, 4000 psi minimum, with 0.45 maximum water/cementitious materials ratio.
   1. Channels: Concrete invert, formed to same width as connected piping, with height of vertical sides to three-fourths of pipe diameter. Form curved channels with smooth, uniform radius and slope.
      a. Invert Slope: 1 percent through manhole.
   2. Benches: Concrete, sloped to drain into channel.
      a. Slope: 8 percent.

E. Ballast and Pipe Supports: Portland cement design mix, 3000 psi minimum, with 0.58 maximum water/cementitious materials ratio.

F. Reinforcement Bars: ASTM A 615, Grade 60 deformed steel.

2.04 MANHOLES

A. Precast concrete manholes shall conform to ASTM C-478.

B. Cast-in-Place-Concrete Manholes: Construct of reinforced-concrete bottom, walls, and top; designed according to ASTM C 890 for A-16 (ASSHTO HS20-44), heavy-traffic,

structural loading; of depth, shape, dimensions, and appurtenances indicated. The minimum compressive strength of concrete manhole shall be 4000 psi.

C. Ballast: Increase thickness of concrete as required to prevent flotation.

D. Resilient Pipe Connectors: ASTM C 923 cast or fitted into manhole walls, for each pipe connection.

E. Adjusting Rings: Interlocking rings with level or sloped edge in thickness and diameter matching manhole frame and cover. Include sealant recommended by ring manufacturer.

F. Grade Rings: Reinforced-concrete rings, 6- to 9-inch total thickness, to match diameter of manhole frame and cover.

G. Manhole Frames and Covers: To meet those detailed in the detail section of the plans as specified with precast concrete manholes

2.05 MORTAR

A. Mortar for flowline directioning in all manholes shall conform to TxDOT Item 465.2B and ASTM C 476.

2.06 CLEANOUTS

A. PVC Cleanouts: PVC body with PVC threaded plug. Include PVC sewer pipe fitting and riser to cleanout of same material as sewer piping.

PART 3 - EXECUTION

3.01 PIPE SEWERS

A. No pipe shall be installed in the trench until excavation has been properly constructed per the plans and details to at least two (2) pipe lengths beyond the section of pipe being installed and the bottom of the trench has been properly shaped.

B. Batter boards where used shall be placed into position properly. Boards shall be nominal 1 x 4 inch lumber, planed on all four sides to parallel faces. The boards and all location stakes must be protected from injury or change of location.

C. Pipe shall be so laid that after the sewer is completed the interior surface shall conform accurately to the grades and alignments fixed and given in the Plans.

D. All sewers must be laid accurately to line and grade, with tongue or spigot end downstream.

E. Pipes shall be fitted together and matched so that when laid, they form a sewer with a smooth and uniform invert.

F. Before laying pipes a sufficient bed shall be prepared at the grade indicated on the drawings. Backfill shall be placed as outlined in Section 31 23 33.

G. A minimum clearance of six (6) inches must be maintained between the sewer and all other lines. Sanitary sewers shall not be routed over water lines.

H. Sanitary sewers shall not be constructed within nine (9) feet (outside to outside) parallel to a water line. Where sanitary sewers cross under water lines, the pipe material for the sewer shall be an 18' length of ductile iron pipe or PVC schedule 80 pressure pipe, centered on the water line.

I. When trenches exceed five feet in depth Contractor shall utilize trench safety measures per Section 31 23 34 Trench Safety.

3.02 MANHOLES

A. Manholes shall be constructed at locations shown on the plans and to the depth indicated thereon.

B. Manholes may be constructed of concrete or precast concrete sections and in all types shall be constructed to the dimensions shown on the plans. Where concrete or precast concrete sections are used, the interior wall shall be thoroughly coated with coal tar epoxy.

C. Joints between precast concrete sections shall be made by uniformly placing "Ram-Nek" flexible plastic gaskets or approved equal on all faces of the lower part of the joint and lowering the upper ring evenly into place to produce uniform bearing and compression on the sealer.

D. The construction of manholes shall be done as soon as practical after sewer lines into or through the manhole are completed.

E. All sewers shall be cut neatly at the inside face of the walls of the manhole and pointed up with mortar.

F. After the masonry work has been completed to the proper elevation, the cast iron manhole cover frame shall be set in a full mortar bed and adjusted to the elevation established on the drawings.

G. The inverts of the sewer line or several sewer lines entering the manhole at or near the flow line elevation of the manhole shall be shaped and routed across the floor of the manhole using mortar to obtain the proper contour.

H. When sanitary sewer pipes enter a manhole two (2) feet or greater above the bottom of the manhole, a drop pipe of equal diameter shall be constructed outside the manhole to the bottom of the manhole per the details on the plans.

I. All Manholes are to be backfilled per article 3.2.C.1 in Specification Section 31 23 33

Trenching, Backfill and Compaction.

3.03 FRAMES, GRATES, RINGS AND COVERS

A. Casting shall conform to the type shown on the plans and shall be clean castings, free from sand or blow holes or other defects. Materials shall be not less than Class 30B gray iron conforming to ASTM A-48.

B. Surfaces of the castings shall be free from burnt-on sand and shall be reasonably smooth.

C. Bearing surfaces between manhole rings and covers and frames shall be cast or machined with such precision that uniform bearing shall be provided throughout the perimeter area of contact.

3.04 FIELD QUALITY CONTROL AND TESTING

A. Inspect interior of piping to determine whether line displacement or other damage has occurred. Inspect after approximately 24 inches of backfill is in place, and again at completion of Project.
1. Submit separate report for each system inspection.
2. Defects requiring correction include the following:
3. Alignment: Less than full diameter of inside of pipe is visible between structures.
4. Deflection: Flexible piping with deflection that prevents passage of ball or cylinder of size not less than 92.5 percent of piping diameter. (Check to see if this is similar to mandrel test and use it instead)
5. Crushed, broken, cracked, or otherwise damaged piping.
6. Infiltration: Water leakage into piping.
7. Exfiltration: Water leakage from or around piping.
8. Replace defective piping using new materials, and repeat inspections until defects are within allowances specified.
9. Reinspect and repeat procedure until results are satisfactory.
10. Test new piping systems, and parts of existing systems that have been altered, extended, or repaired, for leaks and defects.
11. Do not enclose, cover, or put into service before inspection and approval.
12. Test completed piping systems according to requirements of authorities having jurisdiction.
13. Schedule tests and inspections by authorities having jurisdiction with at least 24 hours' advance notice.
14. Submit separate report for each test.

B. HYDROSTATIC TEST: Test sanitary sewerage according to requirements of authorities having jurisdiction and the following:
1. Allowable leakage is maximum of 50 gal./inch of nominal pipe size per mile of pipe, during 24-hour period.
2. Close openings in system and fill with water.
3. Purge air and refill with water.

4. Disconnect water supply.
5. Test and inspect joints for leaks.
6. Option: Test ductile-iron piping according to AWWA C600, "Hydrostatic Testing" Section. Use test pressure of at least 10 psig

C. AIR TESTS: Test sanitary sewerage according to requirements of authorities having jurisdiction, and the following:
1. Option: Test plastic gravity sewer piping according to ASTM F 1417.
2. Option: Test concrete gravity sewer piping according to ASTM C 924.
3. Leaks and loss in test pressure constitute defects that must be repaired.
4. Replace leaking piping using new materials, and repeat testing until leakage is within allowances specified.

D. MANHOLE TESTS: Test sanitary manholes according to requirements of authorities having jurisdiction, and the following:
1. Option: Vacuum testing:
   a. Install vacuum tester head assembly at top access point of manhole and adjust for proper seal on straight top section of manhole structure. Following manufacturer's instructions and safety precautions, inflate sealing element to recommended maximum inflation pressure; do not over-inflate.
   b. Evacuate manhole with vacuum pump to 10 inches mercury (Hg), disconnect pump, and monitor vacuum for time period specified in Table 02533-4, Vacuum Test Time Table.
   c. A manhole passes the test if after 2.0 minutes and with all valves closed, the vacuum is at least 9.0 inches of mercury (Hg).
2. Option: Perform hydraulic test according to ASTM C 969
3. Leaks and loss in test pressure constitute defects that must be repaired.
4. Replace leaking piping using new materials, and repeat testing until leakage is within allowances specified.

END OF SECTION

FIRE STATION #5

CITY OF MIDLAND

DESIGN TEAM

Architectural
Martinez Architects
900 Rockmead, Suite 250
Houston, TX 77339
281.346.7371

Civil Engineer
Maverick Engineering
1909 West Wall Street, Suite K
Midland, Texas 79701
(432) 262-0999

Structural
Matrix Structural Engineers
5177 Richmond Avenue, Suite 670
Houston, Texas 77056
(713) 664-0130

M/E/P/T
DBR
8626 Tesoro Drive, Suite 702
San Antonio, Texas 78217
(210) 546-0200

Landscape Architect
KDC Associates
4400 N. Big Spring, Suite 203
Midland, Texas 79705
(432) 686-8001

INDEX OF DRAWINGS

GENERAL INFORMATION

G 000	COVER PAGE (THIS SHEET)
G 001	GENERAL NOTES
G 002	BUILDING CODE ANALYSIS
G 003	BUILDING CODE ANALYSIS
G 004	SITE CODE ANALYSIS

CIVIL

C 100	COVER SHEET
C 111	EXISTING SITE TOPOGRAPHY
C 120	SWPPP
C 130	SWPPP DETAILS
C 200	DIMENSIONAL PLAN
C 210	PAVING PLAN
C 220	PAVING DETAILS
C 221	PAVING DETAILS
C 230	GRADING PLAN
C 240	DRAINAGE PLAN
C 300	UTILITY PLAN
C 310	WATER DETAILS
C 311	WATER DETAILS
C 320	SEWER DETAILS
C 500	BARRICADE DETAILS
C 501	SIGN DETAILS

LANDSCAPE

LP-1	LANDSCAPE PLAN
LP-2	LANDSCAPE PLAN
LP-3	PLANTING DETAILS
LP-4	IRRIGATION
LP-5	IRRIGATION

ARCHITECTURAL

A 101	ARCHITECTURE SITE PLAN
A 102	SITE DETAILS
A 201	LEVEL 1
A 202	LEVEL 2
A 203	LEVEL 1 DIMENSIONED FLOOR PLAN
A 204	LEVEL 2 DIMENSIONED FLOOR PLAN
A 205	LEVEL 1 + 2 PARTITION TYPES
A 206	PARTITION TYPES
A 301	ROOF PLAN
A 302	ROOF DETAILS
A 401	EXTERIOR ELEVATIONS
A 402	EXTERIOR ELEVATIONS
A 403	BUILDING SECTIONS
A 501	WALL SECTIONS
A 502	WALL SECTIONS
A 503	WALL SECTIONS
A 601	ENLARGED FLOOR PLANS
A 602	INTERIOR ELEVATIONS
A 603	INTERIOR ELEVATIONS
A 701	LEVEL 1 REFLECTED CEILING PLAN
A 702	LEVEL 2 REFLECTED CEILING PLAN
A 801	EXTERIOR DETAILS
A 802	PLAN DETAILS
A 803	PLAN DETAILS
A 804	MILLWORK DETAILS
A 805	MEZZANINE FRAMING DETAILS
A 901	FINISH SCHEDULE
A 902	DOOR AND WINDOW SCHEDULE
A 903	LEVEL 1 FINISH PLAN
A 904	LEVEL 2 FINISH PLAN
A 905	SIGNAGE DETAIL & SCHEDULE
A 906	EQUIPMENT SCHEDULE

STRUCTURAL

S 000	COVER SHEET
S 001	3D CONCEPTUAL
S 101	GENERAL NOTES
S 102	GENERAL NOTES
S 103	GENERAL NOTES
S 201	FOUNDATION PLAN
S 202	SECOND FLOOR FRAMING PLAN
S 203	LOW ROOF FRAMING PLAN
S 204	HIGH ROOF FRAMING PLAN
S 301	FOUNDATION DETAILS
S 302	FOUNDATION DETAILS
S 303	FOUNDATION DETAILS
S 304	FOUNDATION DETAILS
S 305	FOUNDATION DETAILS
S 306	FOUNDATION DETAILS
S 401	FRAMING DETAILS
S 402	FRAMING DETAILS
S 403	FRAMING DETAILS
S 404	FRAMING DETAILS
S 501	COMPOSITE FLOOR DETAILS
S 502	COMPOSITE FLOOR DETAILS
S 503	COMPOSITE FLOOR DETAILS
S 601	ROOF FRAMING DETAILS
S 602	ROOF FRAMING DETAILS
S 603	ROOF FRAMING DETAILS
S 604	ROOF FRAMING DETAILS
S 605	ROOF FRAMING DETAILS
S 701	MASONRY DETAILS
S 702	MASONRY DETAILS
S 703	MASONRY DETAILS
S 801	BRACE ELEVATIONS & DETAILS
S 802	LEANING COLUMN ELEVATIONS & DETAILS

MECHANICAL

MEP 101	MEP SITE PLAN
MEP 102	MEP ROOF PLAN
M 001	MECHANICAL SYMBOLS AND ABREVIATIONS
M 211	LEVEL 1 MECHANICAL PLAN
M 212	LEVEL 2 & 3 MECHANICAL PLAN
M 501	MECHANICAL SCHEDULES
M 502	MECHANICAL SCHEDULES
M 601	MECHANICAL DETAILS
M 602	MECHANICAL DETAILS
M 603	MECHANICAL VRF DIAGRAMS

ELECTRICAL

E 001	ELECTRICAL SYMBOL LEGEND
E 101	LEVEL 1 LIGHTING PLAN
E 102	LEVEL 2 & 3 LIGHTING PLAN
E 201	LEVEL 1 POWER PLAN
E 202	LEVEL 2 & 3 POWER PLAN
E 401	ELECTRICAL ONE-LINE DIAGRAMS
E 501	ELECTRICAL SCHEDULES
E 502	ELECTRICAL SCHEDULES
E 601	ELECTRICAL DETAILS
E 602	ELECTRICAL DETAILS

PLUMBING

P 001	PLUMBING SYMBOLS
P 211	LEVEL 1 PLUMBING PLAN
P 212	LEVEL 2 & 3 PLUMBING PLAN
P 401	PLUMBING RISER DIAGRAMS
P 501	PLUMBING SCHEDULES
P 601	PLUMBING DETAILS
P 602	PLUMBING DETAILS

SECURITY / TECHNOLOGY

TS 001	TECHNOLOGY & SECURITY SYMBOLS SCHEDULES
TS 211	LEVEL 1 LOW VOLTAGE PLAN
TS 212	LEVEL 2 & 3 LOW VOLTAGE PLAN
TS 401	LOW VOLTAGE ENLARGED FLOOR PLANS
TS 501	TECHNOLOGY & SECURITY DETAILS
TS 502	TECHNOLOGY & SECURITY DETAILS
TS 503	TECHNOLOGY & SECURITY DETAILS
TS 601	TECHNOLOGY & SECURITY SCHEDULES

martinez ARCHITECTS

Martinez Architects, LP
900 Rockmead, Suite 250
Houston, Texas 77339
281.346.7371

REGISTERED ARCHITECT
JUSTIN E. MYERS
24640
STATE OF TEXAS

Martinez Architects Project No. MA 18017

Project Address: 2210 W GOLF COURSE RD
MIDLAND, TX 79701

DRAWING ISSUE

7-JUL-19	ISSUE FOR PERMIT
30-JAN-20	ISSUE FOR BIDDING

4.1214

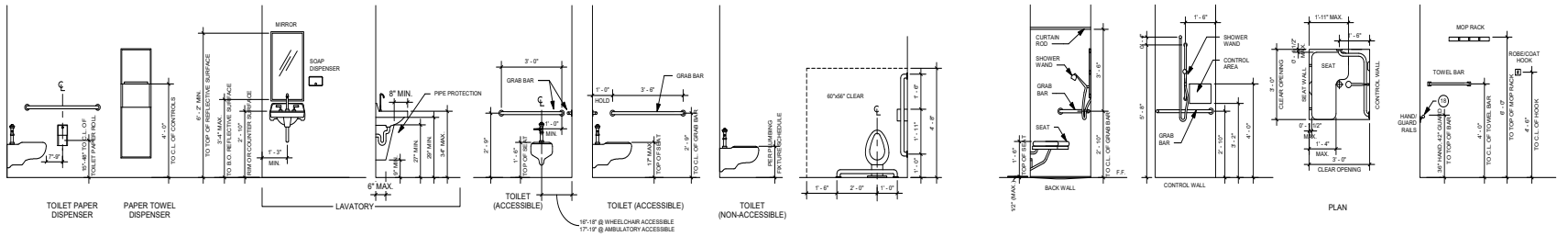

9 FIXTURES / DEVICE MOUNTING HEIGHTS
SCALE: N/A

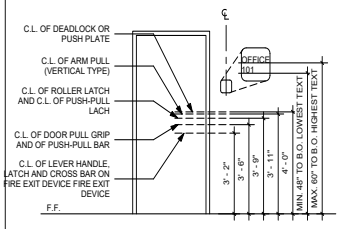

8 DOOR HARDWARE
SCALE: N/A

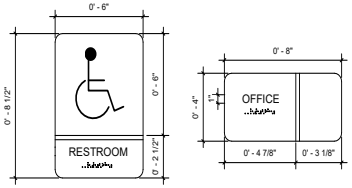

1. ALL SIGNAGE TO BE COMPLIANT WITH ADA/TAS STANDARDS
2. CONTRACTOR SHALL COORDINATE ALL ROOM NAMES WITH ARCHITECT PRIOR TO FABRICATION
3. ARCHITECT SHALL SELECT COLORS AND PATTERNS FROM THE FULL RANGE OF SHERWIN WILLIAMS PAINT COLORS AND WILSON ART PLASTIC LAMINATE SELECTIONS.
4. CONTRACTOR TO COORDINATE W/ OWNER FOR LOGO

5 INTERIOR SIGNAGE
SCALE: N/A

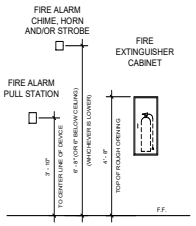

1. THE FOLLOWING FACILITY SHALL BE EQUIPPED THROUGHOUT WITH FIRE ALARM MONITORING DEVICES. FIRE ALARM SHALL BE MONITORED 24/7. FIRE ALARM SUBCONTRACTOR SHALL SUBMIT DESIGN/PLANS FOR REVIEW.
2. CONTRACTOR TO COORDINATE SMOKE DETECTORS, AUDIO/VISUAL NOTIFICATION DEVICES, HEAT DETECTORS, ETC. FOR FULL SYSTEM COMPLIANCE WITH CITY OF MIDLAND FIRE MARSHALS OFFICE.
3. REFERENCE MEP/S/T SHEETS FOR ADDITIONAL INFORMATION AND LOCATION OF DEVICES.
4. FIRE ALARM SUBCONTRACTOR SHALL PROVIDE A COMPLETE DESIGN OF THE FIRE ALARM SYSTEM FOR REVIEW AND APPROVAL BY THE ENGINEER OF RECORD.
5. FIRE ALARM SUBCONTRACTOR SHALL PAY AND ACQUIRE ALL NECESSARY APPROVALS AND PERMITS FROM AUTHORITY HAVING JURISDICTION.

4 FIRE ALARM PROTECTION DEVICES
SCALE: N/A

2 ABREVIATIONS

ACOUS	ACOUSTICAL
ADJ	ADJUSTABLE
AFF	ABOVE FINISH FLOOR
ALUM	ALUMINUM
APPROX	APPROXIMATE
ARCH	ARCHITECT(URAL)
BD	BOARD
BLDG	BUILDING
CL	CENTER LINE
CLG	CEILING
CO	CLEAN OUT
COL	COLUMN
CONC	CONCRETE
CONTR	CONTRACTOR
DIA	DIAMETER
DIM	DIMENSION
DN	DOWN
DWG	DRAWING
E	EAST
EA	EACH
EDF	ELECTRIC DRINKING FOUNTAIN
EL	ELEVATION
ELEC	ELECTRIC
EQ	EQUAL
EQMT	EQUIPMENT
EXIST	EXISTING
EXP	EXPOSED
EXT	EXTERIOR
FD	FLOOR DRAIN
FEC	FIRE EXTINGUISHER CABINET
FF	FINISH FLOOR
FIN	FINISH
FRP	FIBERGLASS REINFORCED PLASTIC
FL	FLOOR
GA	GAUGE
GALV	GALVANIZED
GL	GLAZING
GYP	GYPSUM
HM	HOLLOW METAL
HR	HOUR
HT	HEIGHT
HW	HARDWARE
HVAC	HEATING, VENTILATION & A.C.
INS	INSULATE(D) (ION)
INT	INTERIOR
JT	JOINT
LAM	LAMINATED
LT	LIGHT
LTG	LIGHTING
MAS	MASONRY
MATL	MATERIAL
MAX	MAXIMUM
MECH	MECHANICAL
MFR	MANUFACTURER
MH	MANHOLE
MIN	MINIMUM
MISC	MISCELLANEOUS
MTG	MOUNTING
MTL	METAL
MSTUD	METAL STUD
N	NORTH
NIC	NOT IN CONTRACT
NO	NUMBER
NTS	NOT TO SCALE
OC	ON CENTER
OD OPP	OUTSIDE DIAMETER OPPOSITE
PL	PLASTIC LAMINATE
PLYWD	PLYWOOD
PTD	PAINTED
R	RADIUS
RD	ROOF DRAIN
RE	REFERENCE
REQ'D	REQUIRED
R.R.	RESTROOM
S	SOUTH
SCH	SCHEDULE
SHT	SHEET
SIM	SIMILAR
SPEC	SPECIFICATIONS
STOR	STORAGE
STL	STEEL
STRUCT	STRUCTURE (URAL)
TEMP	TEMPERED
TOS	TOP OF STEEL
TYP	TYPICAL
UNFIN	UNFINISHED
VCT	VINYL COMPOSITION TILE
VER	VERIFY
WD	WOOD

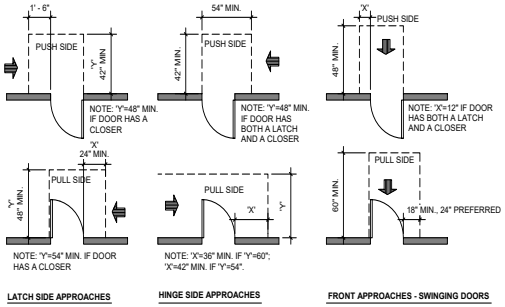

7 TYPICAL DOOR CLEARANCES
SCALE: N/A

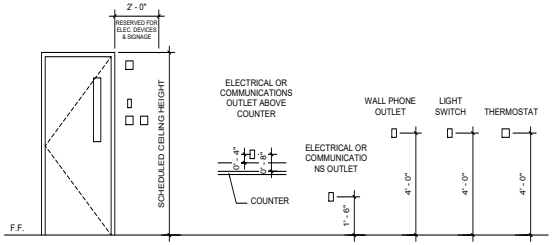

6 ELECTRICAL / COMMUNICATION DEVICES
SCALE: N/A

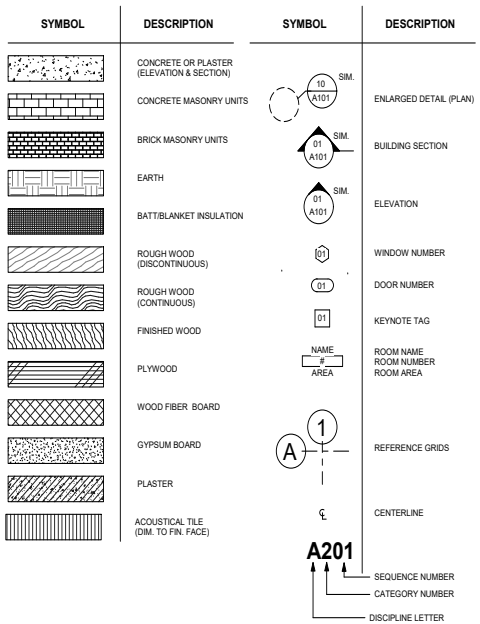

3 SYMBOL LEGEND

1. CONTRACTOR SHALL NOTIFY ARCHITECT OF ANY AND ALL DISCREPANCIES OR CONFLICTS IN FIELD CONDITIONS PRIOR TO FABRICATION, INSTALLATION AND/OR CONSTRUCTION.
2. ALL INCONSISTENCIES BETWEEN DRAWINGS AND SPECIFICATIONS OR WITHIN EITHER DOCUMENT NOT CLARIFIED BY AN ADDENDUM, THE BETTER QUALITY OR GREATER QUANTITY OF WORK SHALL BE INCLUDED IN THE BID.
3. DO NOT SCALE THESE DRAWINGS - USE DIMENSIONS SHOWN @ ALL LOCATIONS (F.V. ALL DIMS PRIOR TO CONSTRUCTION)
4. ALL DIMENSIONS INDICATED ARE TO BACK OF CURB U.N.O.
5. CONTRACTOR TO COMPLY WITH ALL LOCAL BUILDING CODE REQUIREMENTS & TEXAS ACCESSIBILITY STANDARDS.
6. MINIMUM AND MAXIMUM CLEARANCES AND DIMENSIONS SHALL COMPLY WITH TEXAS ACCESSIBILITY STANDARDS
7. EXISTING CURBS, SIDEWALKS, AND DRIVEWAYS IN PUBLIC STREET RIGHTS-OF-WAY OR EASEMENTS DAMAGED OR REMOVED DURING CONSTRUCTION SHALL BE REPLACED TO LOCAL STANDARDS. ALL OTHER CURBS, SIDEWALKS AND DRIVEWAYS, NOT SHOWN TO BE REMOVED, DAMAGED BY CONSTRUCTION SHALL BE REPLACED IN ACCORDANCE WITH THE DETAILS CONTAINED IN THESE PLANS.
8. CONTRACTOR SHALL MARK EXIST. UTILITIES IN FIELD PRIOR TO EXCAVATION. CONTRACTOR IS RESPONSIBLE FOR ANY REPAIR NEEDED TO THESE SYSTEMS IF DAMAGED.
9. PRIOR TO BEGINNING WORK, CONTRACTOR SHALL VERIFY THE LOCATION OF CONTROL POINTS, TEMP. BENCHMARK ELEVATIONS, AND ACCURACY OF EXIST. GRADES. ADVISE OWNER AND ARCHITECT OF ANY DISCREPANCIES PRIOR TO BEGINNING WORK.
10. CONTRACTOR TO USE LINE INDICATOR AND FIELD VERIFY LOCATIONS OF ANY EXISTING UTILITIES AND OTHER FACILITIES BEFORE COMMENCING WORK. CONTRACTOR AGREES TO BE FULLY RESPONSIBLE FOR ANY AND ALL DAMAGES WHICH MIGHT BE OCCASIONED BY HIS FAILURE TO LOCATE AND PRESERVE ANY AND ALL EXISTING FACILITIES.
11. CONTRACTOR TO PRELIMINARY LAY OUT. ONCE LAID OUT, REVIEW WITH ARCH. BEFORE PROCEEDING. COORDINATE ALL DIMENSIONS & REPORT ANY DISCREPANCIES TO ARCHITECT BEFORE STARTING ANY WORK.
12. CONTRACTOR SHALL CONTACT LOCAL M.U.D. DISTRICT FOR SANITARY SEWER/WATER CONNECTION COORDINATION AND FOR ALL FEES REQUIRED. SEWER/WATER IMPACT FEES BY OWNER.
13. CONTRACTOR IS RESPONSIBLE FOR HIS OWN HORIZONTAL AND VERTICAL CONTROL REFERENCE POINTS AND CONSTRUCTION STAKING AS INCIDENTAL TO THE PROJECT.
14. CONTRACTOR IS RESPONSIBLE FOR PROVIDING AND MAINTAINING ALL BARRICADES, WARNING SIGNS, FLASHING LIGHTS, AND TRAFFIC CONTROL DEVICES IN CONFORMANCE WITH PART VI OF THE "TEXAS MANUAL ON UNIFORM TRAFFIC CONTROL DEVICES"
15. OFF DUTY UNIFORMED POLICE OFFICER IS REQUIRED TO DIRECT TRAFFIC WHERE TRAFFIC LANES ARE BLOCKED.
16. CONTRACTOR TO FIELD VERIFY ALL SITE/TOPOGRAPHIC INFORMATION PRIOR TO BEGINNING WORK.
17. CONTRACTOR SHALL BE RESPONSIBLE FOR OBTAINING ALL NECESSARY BUILDING PERMITS AND FOR NOTIFICATION OF ALL AUTHORIZED INSPECTORS, SUPERINTENDENTS, OR PERSONS IN CHARGE OF PRIVATE OR PUBLIC UTILITIES AFFECTED BY HIS OPERATIONS PRIOR TO COMMENCEMENT OF WORK.
18. CONTRACTOR SHALL NOTIFY PROPER AUTHORITIES AT LEAST 48 HOURS BEFORE EXCAVATING IN ANY STREET RIGHT-OF-WAY OR PUBLIC EASEMENTS.
19. ALL EXISTING ITEMS IN THE WAY OF NEW CONSTRUCTION ARE TO BE REMOVED/RELOCATED AS REQUIRED BY THE ARCHITECT WHETHER SHOWN OR NOT.
20. REPAIR ALL DAMAGE TO SITE & VEGETATION ONCE CONSTRUCTION IS COMPLETE - HYDROMULCH ALL AREAS AFFECTED BY CONSTRUCTION (IN BASE BID)
21. ALL SIGNAGE TO BE ADA COMPLIANT AND INSTALLED AS PART OF BASE BID
22. LOCATE ROOM IDENTIFICATION SIGN ON LATCH SIDE OF DOOR SIGNAGE: SHALL BE LAMINATED PLASTIC W/ 5/8" HIGH UPPER CASE LETTERING & GRADE 2 BRAILLE W/CONTRASTING BACKGROUND & 1/32" RAISED CHARACTERS.
23. AT ACCESSIBLE FIXTURE, FLUSH LEVER ALWAYS POINTS TOWARD WIDE SIDE OF TOILET SPACE. FLUSH LEVER SHALL BE NO HIGHER THAN 44" A.F.F.
24. GOOSENECK FAUCET WITH LEVER OPERATED HANDLES
25. INSULATE EXPOSED HOT WATER AND DRAIN PIPES UNDER LAVATORY.
26. WALL AREA WITHIN 2'-0" OF DOOR FRAME AND FULL HEIGHT OF DOOR SHALL BE RESERVED FOR INSTALLATION OF MECHANICAL & ELECTRICAL DEVICES.
27. SPOUT SHALL BE AT FRONT OF THE UNIT AND SHALL DIRECT THE WATER FLOW IN A TRAJECTORY THAT IS PARALLEL OR NEARLY PARALLEL TO THE FRONT OF THE UNIT. THE SPOUT SHALL PROVIDE A FLOW OF WATER AT LEAST 4" HIGH.
28. CLEAR SPACE BETWEEN BOTTOM OF APRON & FLOOR TO BE AT LEAST 27" HIGH, 30" WIDE AND 17" TO 19" DEEP. ALSO PROVIDE 30"X48" MIN. CLEAR FLOOR SPACE.
29. COORDINATE RECEPTACLES W/ COUNTERTOP AND BACKSPLASH.
30. ALL HANDRAILS TO HAVE A CONTINUOUS GRIP & BE SECURE IN THEIR FITTINGS. HANDRAILS SHALL BE 1-1/4" & HAVE 1-1/2" CLEAR SPACE BETWEEN WALL AND BAR W/ SMOOTH ROUND ENDS.
31. AT ALL PULL SIDE OF DOORS THERE SHALL BE A MINIMUM CLEARANCE OF 18" FROM THE STRIKE TO THE NEAREST PERPENDICULAR WALL OR PROTRUDING OBJECT.
32. AT ALL PUSH SIDES OF DOORS WITH A CLOSURE AND A LATCH THERE SHALL BE A MINIMUM CLEARANCE OF 12" FROM THE STRIKE TO THE NEAREST PERPENDICULAR WALL OR PROTRUDING OBJECT.
33. ALL DOORS WITH CLOSURES ARE TO BE ADJUSTED TO HAVE A 3 SECOND SWEEP AT AN OPEN POSITION OF 70 DEGREES. THE FORCE TO OPEN DOORS SHALL NOT EXCEED 5 LBF.
34. SIGNS ON DOUBLE LEAF DOORS TO BE MOUNTED 60" A.F.F. TO THE CENTERLINE OF THE SIGN. MOUNTING POSITION OF SUCH A SIGN SHALL BE SO A PERSON MAY APPROACH WITHIN 3" OF SIGN WITHOUT ENCOUNTERING ANY PROTRUDING OBJECTS OR STANDING WITHIN THE SWING OF THE DOOR.

1 NOTES

PROFESSIONAL SEAL

REGISTERED ARCHITECT JUSTIN E. MARTINEZ 24640 STATE OF TEXAS

LOGO/CONTACT

martinez ARCHITECTS

Martinez Architect, LP
900 Rockmead, Suite 250
Houston, Texas 77339
281.346.7371

DESIGN TEAM

Architectural
Martinez Architects

Civil Engineer
Maverick Engineering

Structural
Matrix Structural Engineers

ME/P/T
DBR

Landscape Architect
KDC Associates

FIRE STATION #5
CITY OF MIDLAND
2210 W GOLF COURSE RD
MIDLAND, TX 79701

PROJECT No: **MA 18017**
DATE: **16-JAN-2020**

ISSUE
75% CONSTRUCTION DOCUMENT 26-JUN-2019
100% ISSUE FOR PERMIT 30-JUL-2019
100% ISSUE FOR APPROVAL TO BID 16-JAN-2020

GENERAL NOTES

G 001

4.1215

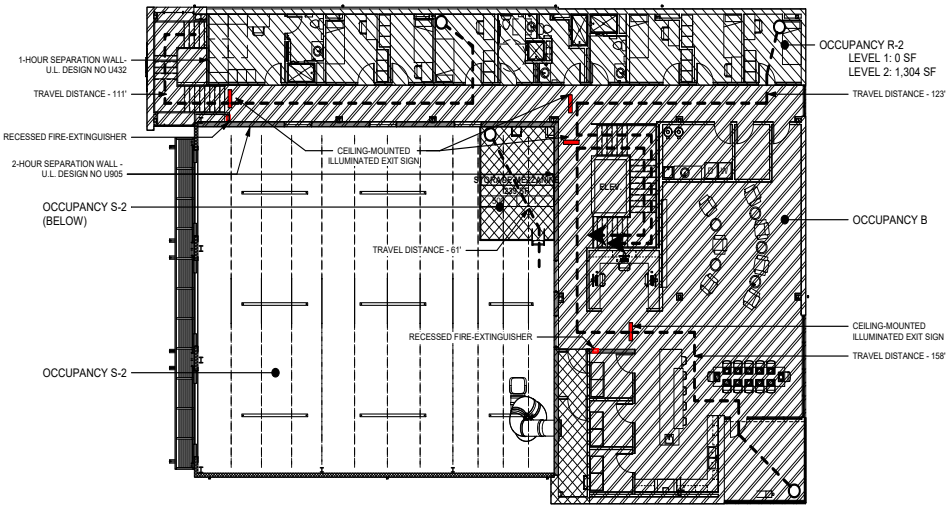

3 LEVEL 2
SCALE: 3/32" = 1'-0"

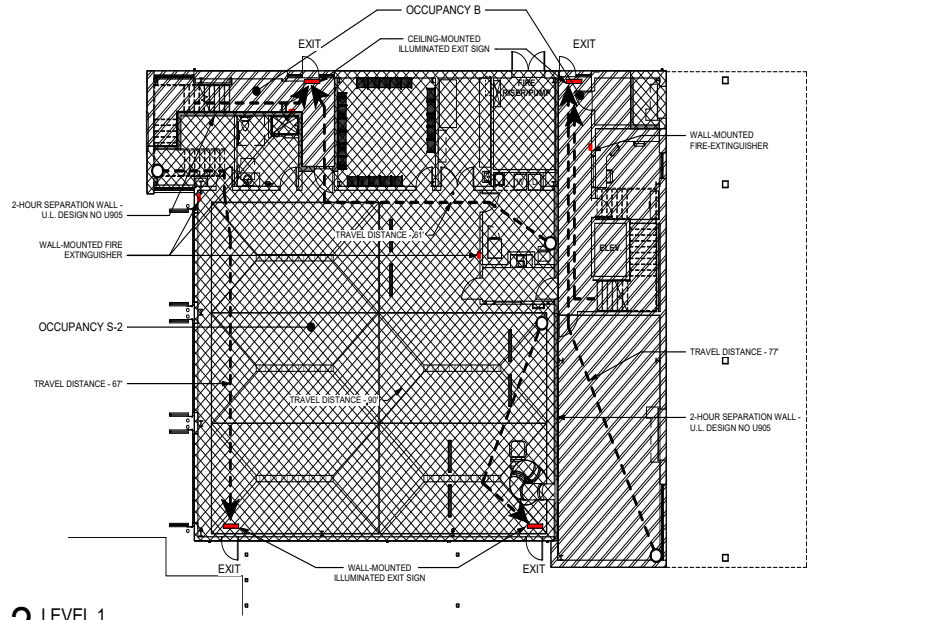

2 LEVEL 1
SCALE: 3/32" = 1'-0"

OCCUPANCY CALCULATIONS					
Area	Level	Name	Number	Occupancy Factor	Occupant Load
LEVEL 1 F.F.					
101 SF	LEVEL 1 F.F.	ENTRY	101	0	
121 SF	LEVEL 1 F.F.	DECON.	102	500	1
130 SF	LEVEL 1 F.F.	STORAGE	103	500	1
302 SF	LEVEL 1 F.F.	GEAR ROOM	104	300	2
163 SF	LEVEL 1 F.F.	SHOP + SCBA EQUIPMENT	105	500	1
161 SF	LEVEL 1 F.F.	FIRE RISER/PUMP	106	500	1
48 SF	LEVEL 1 F.F.	ELECTRICAL	107	500	1
138 SF	LEVEL 1 F.F.	STAIRWAY	108	0	
35 SF	LEVEL 1 F.F.	YARD STORAGE	109	500	1
168 SF	LEVEL 1 F.F.	OFFICE	110	100	2
228 SF	LEVEL 1 F.F.	HALLWAY	111	0	
167 SF	LEVEL 1 F.F.	UTILITY	112	500	1
77 SF	LEVEL 1 F.F.	AIR LOCK	113	0	
3303 SF	LEVEL 1 F.F.	APPARATUS BAYS	114	500	7
721 SF	LEVEL 1 F.F.	EXERCISE	115	100	8
LEVEL 2					
149 SF	LEVEL 2	DORM 1	201	200	1
62 SF	LEVEL 2	RR	202	200	1
107 SF	LEVEL 2	DORM 2	203	200	1
91 SF	LEVEL 2	DORM 3	204	200	1
116 SF	LEVEL 2	DORM 4	205	200	1
77 SF	LEVEL 2	ADA RR	206	200	1
78 SF	LEVEL 2	RR	207	200	1
64 SF	LEVEL 2	RR	208	200	1
105 SF	LEVEL 2	DORM 5	209	200	1
104 SF	LEVEL 2	DORM 6	210	200	1
109 SF	LEVEL 2	DORM 7	211	200	1
1347 SF	LEVEL 2	HALLWAY	212	0	
110 SF	LEVEL 2	UTILITY	213	100	2
55 SF	LEVEL 2	IT	214	100	1
403 SF	LEVEL 2	DAY ROOM	215	100	5
120 SF	LEVEL 2	WORK STATIONS	216	100	2
37 SF	LEVEL 2	AIR LOCK	217	0	
81 SF	LEVEL 2	EXIT HALLWAY	218	0	
55 SF	LEVEL 2	PANTRY 1	219	100	1
57 SF	LEVEL 2	PANTRY 2	220	100	1
52 SF	LEVEL 2	PANTRY 3	221	100	1
336 SF	LEVEL 2	KITCHEN	222	100	4
167 SF	LEVEL 2	DINING ROOM	223	100	2
168 SF	LEVEL 2	PATIO	224	100	2
239 SF	LEVEL 2	STORAGE MEZZANINE	225	500	1
RAPPELLING LEVEL					
58 SF	RAPPELLING LEVEL	RAPPELLING LEVEL	301	100	1
68 SF	RAPPELLING LEVEL	RAPPELLING PLATFORM	302	100	1
10277 SF					61

OCCUPANCY TYPE	LEVEL 1	LEVEL 2	TOTAL
S-2	4,870 SF	241 SF	**5,111 SF**
B	1,712 SF	3,625 SF	**5,337 SF**
R-2	0	1,304 SF	**1,304 SF**
TOTAL	**6,582 SF**	**5,170 SF**	**11,752 SF**

R-2 OCCUPANCY

S-2 OCCUPANCY

B OCCUPANCY

FIRE RATED PARTITION

JURISDICTION: CITY OF MIDLAND, TEXAS

OWNER: CITY OF MIDLAND

ADDRESS: 2210 WEST GOLF COURSE, MIDLAND, TX 79701

LEGAL DESCRIPTION: ACRES: 0.507, BLK: 001, LOT: 08A, ADDN: BERKSHIRE PLACE

TDL&R REGISTRATION: TABS2019018182

DESCRIPTION: 2-STORY BLDG (11,752 S.F.)

CODE: 2018 INTERNATIONAL BUILDING CODE

OTHER APPLICABLE CODES: TEXAS ACCESSIBILITY STANDARDS OF THE ARCHITECTURAL BARRIERS ACT, ARTICLE 9102, TEXAS CIVIL STATUTES, AND THE AMERICANS WITH DISABILITIES ACT

BUILDING CONSTRUCTION TYPE: II-B (601)
REQ'D. FIRE RESISTANCE IN MINUTES (TABLE 601):

STRUCTURAL FRAME	-
INT/EXT BEARING WALLS	-
INT/EXT NONBEARING WALLS	-
FLOOR CONSTRUCTION	-
ROOF CONSTRUCTION	-
SPRINKLED CORRIDORS	
CORRIDOR WALLS	-
CORRIDOR DOORS	-
FIRE BARRIER	60 MIN.
RISER ROOM	60 MIN.

BUILDING HEIGHT AND AREA LIMITATIONS:

TOTAL BUILDING AREA	11,752 SF
ALLOWABLE AREA (PER TABLE 503)	16,000 SF
R-2 IS MOST STRINGENT OCCUPANCY AREA LIMITATION	
TOTAL HEIGHT (503.1)	23'-0"
ALLOWABLE MAXIMUM HEIGHT (503.1)	55'-0"

MAXIMUM OCCUPANT LOADS (1004.1.1):

WORK AREA	(B OCCUPANCY)	100 GROSS SF / OCCUPANT
APPARATUS	(S-2 OCCUPANCY)	500 GROSS SF / OCCUPANT
DORMS	(R-2 OCCUPANCY)	200 SF / OCCUPANT

PROJECT OCCUPANT LOADS:

TOTAL LOAD: 61
RE: OCCUPANCY LOAD CALCULATIONS ON THIS SHEET

EGRESS:
FACILITY SHALL HAVE MORE THAN THE REQUIRED MEANS OF EGRESS FOR THE FACILITY PER SECTION 1015.

TRAVEL DISTANCES SHALL NOT EXCEED 250' (A OCCUPANCY) AND 300' (B OCCUPANCY) FROM ANY GIVEN SPACE TO AN EXIT (1016.1).

DEAD-END CORRIDORS SHALL NOT EXCEED 20'-0" (1018.4).

ALL EXIT DOORS SHALL BE 34" WIDE CLEAR MIN. AND SWING IN THE DIRECTION OF TRAVEL.

EGRESS WIDTH:
ALL EGRESS PASSAGE WIDTHS SHALL BE GREATER THAN 0.20 X OCCUPANT LOAD (1005.3.2)
REQUIRED EGRESS WIDTH: 0.20 x 61 OCCUPANTS = 12.2"
PROVIDED EGRESS WIDTH: 90 1/4"

FIRE PROTECTION:
- AUTOMATIC FIRE SPRINKLER SYSTEM PROVIDED
- AUTOMATIC FIRE ALARM SYSTEM PROVIDED, PER NFPA 72
- THE FACILITY SHALL BE EQUIPPED THROUGHOUT WITH FIRE ALARM MONITORING DEVICES, AND SHALL BE MONITORED 24/7.
- FIRE ALARM SUBCONTRACTOR SHALL SUBMIT DESIGN/PLANS FOR REVIEW.
- CONTRACTOR TO COORDINATE SMOKE DETECTORS, AUDIO/VISUAL NOTIFICATION DEVICES, HEAT DETECTORS, ETC. FOR FULL SYSTEM COMPLIANCE WITH FIRE MARSHAL.
- FIRE ALARM SUBCONTRACTOR SHALL PROVIDE A COMPLETE DESIGN OF THE FIRE ALARM SYSTEM FOR REVIEW AND APPROVAL BY THE ENGINEER OF RECORD.
- FIRE ALARM SUBCONTRACTOR SHALL PAY AND ACQUIRE ALL NECESSARY APPROVALS AND PERMITS FROM AUTHORITY HAVING JURISDICTION.

FIRE FLOW:
GPM REQUIRED FOR 11,773 S.F. FACILITY = 2,250 GPM
75% REDUCTION FOR AUTOMATIC FIRE SPRINKLER SYSTEM = 562 GPM
PER IFC SECTION B105.2, MINIMUM FIRE FLOW = 1,500 GPM

FIRE WALL IDENTIFICATION:
INSTALL STENCILED LETTERING 2" IN HEIGHT SPACED EVERY 12", AT ALL FIRE RATED PARTITIONS ABOVE CEILING.

1 CODE ANALYSIS (IBC 2018)

PROFESSIONAL SEAL

REGISTERED ARCHITECT JUSTIN E. MYERS 24840 STATE OF TEXAS

LOGO/CONTACT

martinez ARCHITECTS

Martinez Architect, LP
900 Rockmead, Suite 250
Houston, Texas 77339
281.346.7371

DESIGN TEAM

Architectural
Martinez Architects

Civil Engineer
Maverick Engineering

Structural
Matrix Structural Engineers

MEP/FP
DBR

Landscape Architect
KDC Associates

FIRE STATION #5

CITY OF MIDLAND
2210 W GOLF COURSE RD
MIDLAND, TX 79701

PROJECT No: **MA 18017**
DATE: **16-JAN-2020**

ISSUE

75% CONSTRUCTION DOCUMENT 26-JUN-2019

100% ISSUE FOR PERMIT 30-JUL-2019

100% ISSUE FOR APPROVAL TO BID 16-JAN-2020

BUILDING CODE ANALYSIS

G 002

4.1216

Design No. U905
BXUV.U905
Fire Resistance Ratings - ANSI/UL 263

Design/System/Construction/Assembly Usage Disclaimer

• Authorities Having Jurisdiction should be consulted in all cases as to the particular requirements covering the installation and use of UL
Certified products, equipment, system, devices, and materials.
• Authorities Having Jurisdiction should be consulted before construction.
• Fire resistance assemblies and products are developed by the design submitter and have been investigated by UL for compliance with
applicable requirements. The published information cannot always address every construction nuance encountered in the field.
• When field issues arise, it is recommended the first contact for assistance be the technical service staff provided by the product
manufacturer noted for the design. Users of fire resistance assemblies are advised to consult the general Guide Information for each
product category and each group of assemblies. The Guide Information includes specifics concerning alternate materials and alternate
methods of construction.
• Only products which bear UL's Mark are considered Certified.

BXUV - Fire Resistance Ratings - ANSI/UL 263
BXUV7 - Fire Resistance Ratings - CAN/ULC-S101 Certified for Canada

See General Information for Fire-resistance Ratings - ANSI/UL 263
See General Information for Fire Resistance Ratings - CAN/ULC-S101 Certified for Canada

Design No. U905
March 11, 2016
Bearing Wall Rating — 2 HR.
Nonbearing Wall Rating — 2 HR

This design was evaluated using a load design method other than the Limit States Design Method (e.g., Working Stress Design Method). For jurisdictions employing the Limit States Design Method, such as Canada, a load restriction factor shall be used — See Guide BXUV or BXUV7

* Indicates such products shall bear the UL or cUL Certification Mark for jurisdictions employing the UL or cUL Certification (such as Canada), respectively.

HORIZONTAL SECTION

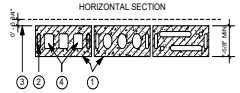

1. Concrete Blocks* — Various designs. Classification D-2 (2 hr).
See Concrete Blocks category for list of eligible manufacturers.

2. Mortar — Blocks laid in full bed of mortar, nom. 3/8 in. thick, of not less than 2-1/4 and not more than 3-1/2 parts of clean sharp sand to 1 part Portland cement (proportioned by volume) and not more than 50 percent hydrated lime (by cement volume). Vertical joints staggered.

3. Portland Cement Stucco or Gypsum Plaster — Add 1/2 hr to classification if used. Where combustible members are framed in wall, plaster or stucco must be applied on the face opposite framing to achieve a max. Classification of 1-1/2 hr. Attached to concrete blocks (Item 1).

4. Loose Masonry Fill — If all core spaces are filled with loose dry expanded slag, expanded clay or shale (Rotary Kiln Process), water repellant vermiculite masonry fill insulation, or silicone treated perlite loose fill insulation add 2 hr to classification.

5. Foamed Plastic* — (Optional-Not Shown) — 1-1/2 in. thick max, 4 ft wide sheathing attached to concrete blocks (Item 1).

ATLAS ROOFING CORP — "EnergyShield Pro Wall Insulation" and "EnergyShield Pro 2 Wall Insulation"

CARLISLE COATINGS & WATERPROOFING INC — Type R2+ Sheath

FIRESTONE BUILDING PRODUCTS CO L L C — "Enverge™ CI Foil Exterior Wall Insulation" and "Enverge™ CI Glass Exterior Wall Insulation"

HUNTER PANELS — Types Xci-Class A, Xci 286

RMAX OPERATING L L C — "TSX-8500", "TSX-8510", "Thermasheath-XP", "ECOMAXci", "Thermasheath-3", "Durasheath-3"

THE DOW CHEMICAL CO — Types Thermax Sheathing, Thermax Light Duty Insulation, Thermax Heavy Duty Insulation, Thermax Metal Building Board, Thermax White Finish Insulation, Thermax ci Exterior Insulation, Thermax XARMOR ci Exterior Insulation, Thermax IH Insulation, Thermax Plus Liner Panel, Thermax Heavy Duty Plus (HDP) and TUFF-R™ ci Insulation

5A. **Building Units —** As an alternate to Items 5, min. 1-in thick polyisocyanurate composite foamed plastic insulation boards, nom. 48 by 48 or 96 in.

RMAX OPERATING L L C — "Thermasheath-SI", "ECOBASEci", "ThermaBase-CI"

*** Indicates such products shall bear the UL or cUL Certification Mark for jurisdictions employing the UL or cUL Certification (such as Canada), respectively.**

The appearance of a company's name or product in this database does not in itself assure that products so identified have been manufactured under UL's Follow-Up Service. Only those products bearing the UL Mark should be considered to be Certified and covered under UL's Follow-Up Service. Always look for the Mark on the product.
UL permits the reproduction of the material contained in the Online Certification Directory subject to the following conditions: 1. The Guide Information, Assemblies, Constructions, Designs, Systems, and/or Certifications (files) must be presented in their entirety and in a non-misleading manner, without any manipulation of the data (or drawings). 2. The statement "Reprinted from the Online Certifications Directory with permission from UL" must appear adjacent to the extracted material. In addition, the reprinted material must include a copyright notice in the following format: "© 2016 UL LLC".

2 UL ASSEMBLY - U905
SCALE: 1 1/2" = 1'-0"

Design No. U432

APRIL 19, 2017

Bearing Wall Rating - 1Hr (See Item 2)

Nonbearing Wall Rating - 1 Hr (See Item 2)

This design was evaluated using a load design method other than the Limit States Design Method (e.g., Working Stress Design Method). For jurisdictions employing the Limit States Design Methods, such as Canada, a load restriction factor shall be used - See Guide BXUV or BXUV7

***Indicates such products shall bear the UL or cUL Certification Mark for Jurisdictions employing the UL or cUL Certification (such as Canada), respectively.**

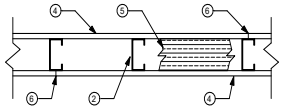

1. **Floor and Ceiling Runners** - (Not shown) - Channel shaped, fabricated from min 0.0329 in. thick, bare metal thickness (No. 20 MSG) corrosion-protected steel, that provides a sound structural connection between steel studs and adjacent assemblies such as floors, ceilings and/or other walls. Attached to floor and ceiling assemblies with steel fasteners spaces not greater than 24 in. OC.
2. **Steel Studs** - Min 0.0329 in. thick, bare metal thickness (No. 20 MSG) corrosion-protected steel studs, min 3-1/2 in. wide, cold formed, designed in accordance with the current edition of the Specification for the Design of Cold-Formed Steel Structural Members by the American Iron and Steel Institute (AISI). All design details enhancing the structural integrity of the wall assembly, including the axial design load of the studs, shall be as specified by the steel stud design and/or producer, and shall meet the requirements of all applicable local code agencies. The max stud spacing shall not exceed 24 in. OC. Studs attached to floor and ceiling runners with 1/2 in. long Type S-12 steel screws on both sides of the studs or by welders or bolted connections designed in accordance with the AISI specifications (bearing walls). Studs to be cut 1/2 to 3/4 in. less than assembly height and friction-fitted into floor and ceiling runners (nonbearing walls).
3. **Lateral Support Members** - (Not shown) - Where required for lateral support of studs, support shall be provided by means of steel straps, channels or other similar means as specified in the design of a particular steel stud wall system.
4. **Gypsum Board* -** Nom 5/8 in. thick, 24 to 54 in. wide gypsum panels, attached vertically or horizontally with 1-1/4 in. long Type S-12 steel screws. When applies vertically to studs, joints centered over studs are staggered one stud cavity on opposite sides of studs and attached with screws spaced 8 in. OC along the edges and 12 in. OC in the field. When applied horizontally to studs, no distance requirements on joints on opposite sides of studs and attached with screws spaced 8 in. OC along the edges and the field. When used in widths other than 48 in., gypsum panels to be installed horizontally. UNITED STATES GYPSUM CO - Type FRX-G
5. **Batts and Blankets* -** (Optional, not shows) - Placed in stud cavities, any glass fiber or mineral wool insulation bearing the UL Classification Marking as to Surface Burning Characteristics and/or Fire Resistance. See Batts and Blankets (BKNV or BZJZ) Categories for names of Classified companies.
6. **Joint Tape and Compound -** Vinyl or casein, dry or premixed join compound applied in two coats to joints and screw heads. Paper tape, nom 2 in. wide, embedded in first layer of compound over all joint. Paper tape and joint compound may be omitted when gypsum boards are supplied with square edges.
7. **Caulking and Sealants* -** (Optional, not shown) - A bead of acoustical sealant applied around the partition perimeter for sound control
UNITED STATES GYPSUM CO - Type AS

***Indicates such products shall bear the UL or cUL Certification Mark for jurisdictions employing the UL or cUL Certification (such as Canada), respectively.**

Last Updated on 2017-04-19

1 UL ASSEMBLY - U432
SCALE: 1 1/2" = 1'-0"

4.1217

PROFESSIONAL SEAL

LOGO/CONTACT

martinez ARCHITECTS

Martinez Architect, LP
900 Rockmead, Suite 250
Houston, Texas 77339
281.346.7371

DESIGN TEAM

Architectural
Martinez Architects

Civil Engineer
Maverick Engineering

Structural
Matrix Structural Engineers

M/E/P/T
DBR

Landscape Architect
KDC Associates

FIRE STATION #5

CITY OF MIDLAND
2210 W GOLF COURSE RD
MIDLAND, TX 79701

PROJECT No: **MA 18017**
DATE: **16-JAN-2020**

ISSUE

75% CONSTRUCTION DOCUMENT 26-JUN-2019
100% ISSUE FOR PERMIT 30-JUL-2019
100% ISSUE FOR APPROVAL TO BID 16-JAN-2020

BUILDING CODE ANALYSIS

G 003

PARKING REQUIREMENTS:
COMMERCIAL USE (NOT LISTED ABOVE): ONE SPACE FOR EACH TWO EMPLOYEES PER MAXIMUM SHIFT OR ONE SPACE PER EACH 1,000 SQUARE FEET OF FLOOR AREA, WHICHEVER IS GREATER

PARKING REQUIRED BY CODE: 12
PARKING PROVIDED: 16

LEGEND

FIRE LANE MARKING

PROPERTY LINE

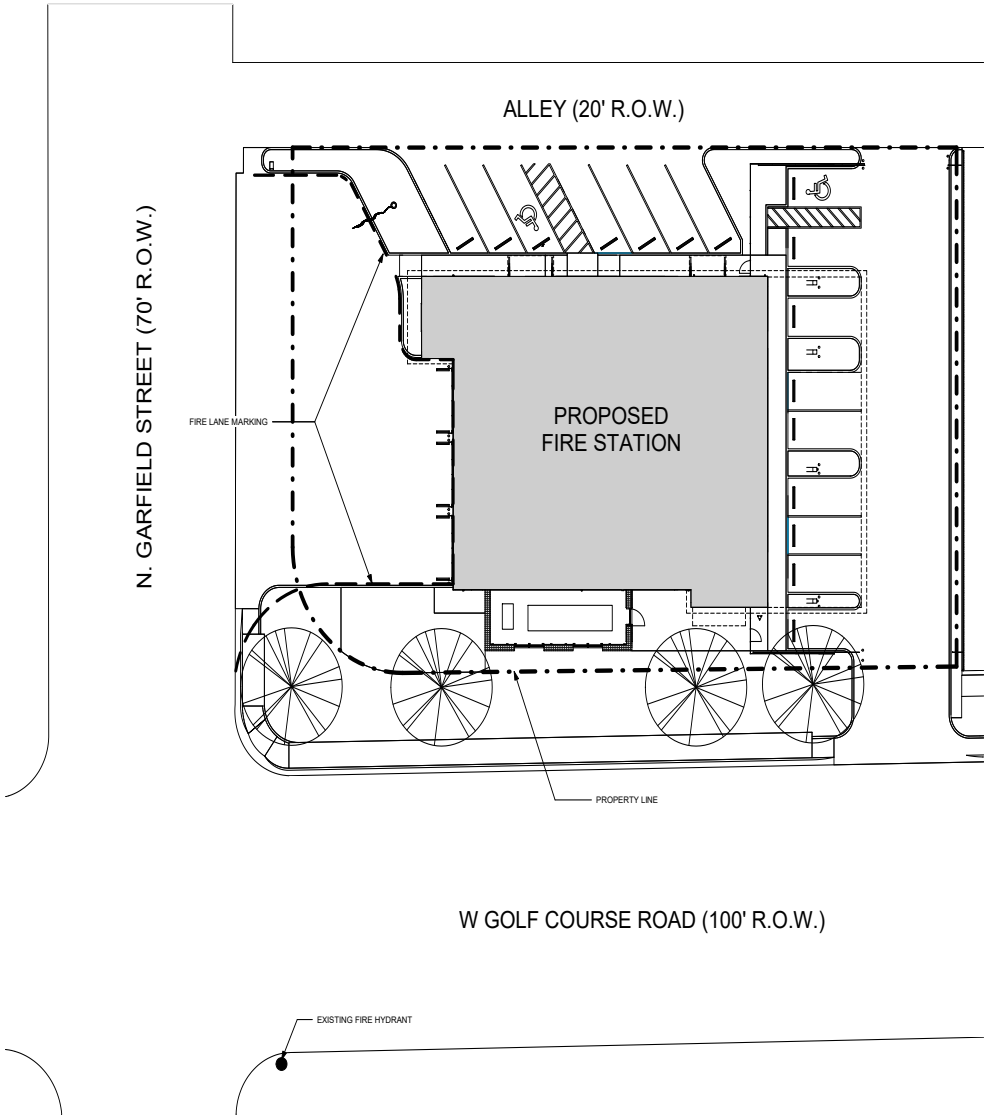

3 SITE CODE ANALYSIS PLAN
SCALE: 1/16" = 1'-0"

N

FIRE LANE LAYOUT:

1. ACCESS WITHIN 150 FT. OF ALL PORTIONS OF THE FACILITY SHALL BE MAINTAINED ALONG AN UNOBSTRUCTED PATHWAY AROUND THE EXTERNAL WALL OF THE STRUCTURE. ACCESS SHALL NOT BE GREATER THAN 15' FROM BUILDINGS.
2. A FIRE APPARATUS ACCESS ROAD SHALL BE PROVIDED IF REQUIRED. ACCESS ROAD SHALL BE CONSTRUCTED AND MAINTAINED IN ACCORDANCE WITH APPENDIX D OF THE 2018 IFC.
   a. ACCESS ROAD SHALL BE LOCATED ADJACENT TO THE STRUCTURE A MINIMUM OF 15' AND A MAXIMUM OF 30' AND SHALL BE POSITIONED PARALLEL TO ONE ENTIRE SIDE OF THE BUILDING.
   b. INTERIOR RADIUS SHALL NOT BE LESS THAN 25'.
   c. ACCESS TO PROPERTY RADIUS SHALL NOT BE LESS THAN 15'.
3. A FIRE APPARATUS ACCESS ROAD SHALL BE PROVIDED WITH APPROPRIATE IDENTIFICATION.
   a. A 24' WIDE UNOBSTRUCTED ACCESS ROAD SHALL BE PROVIDED FOR STRUCTURES LESS THAN 30' IN HEIGHT.
   b. A 26' WIDE UNOBSTRUCTED ACCESS ROAD SHALL BE PROVIDED FOR STRUCTURES GREATER THAN 30' IN HEIGHT.
   c. ACCESS ROADS GREATER THAN 150' SHALL BE PROVIDED WITH A TURNAROUND IN ACCORDANCE WITH TABLE D103.3.

FIRE LANE SIGN:

1. AT THE BEGINNING AND END OF THE FIRE LANE, THE SIGN SHALL HAVE A SINGLE HEADED ARROW POINTING IN THE DIRECTION THE REGULATION IS IN EFFECT. THE INTERMEDIATE SIGNS SHALL HAVE DOUBLE HEADED ARROWS POINTING IN BOTH DIRECTIONS.
2. THE MAXIMUM SPACING OF THE SIGNS SHALL BE 75', CONTINGENT UPON TRAFFIC ENGINEERING'S REVIEW AND APPROVAL.
3. SIGNS TO BE POSTED ON BOTH SIDES AS A FIRE LANE.
4. THE SIGNS SHALL BE SET AT AN ANGLE OF NOT LESS THAT 30° NOR MORE THAN 45° WITH THE CURB OR LINE OF TRAFFIC FLOW.
5. THE CLEARANCE TO THE BOTTOM OF THE SIGN SHALL BE 7'. THERE SHALL BE NO OTHER SIGNS ATTACHED TO THE SIGN OR THE SIGN POLE.
6. THE SIGN PLATE SHALL BE A MINIMUM OF 12"x18" WITH A THICKNESS OF 0.80".

FIRE LANE MARKING AT CURB:

1. PAINT CURB RED FROM TOP SEAM OF CURB TO A POINT EVEN WITH DRIVING SURFACE IN 4" WHITE LETTERS AT 25' INTERVALS
   - "FIRE LANE - NO PARKING - TOW AWAY ZONE"
2. AT HORIZONTAL SURFACES WITH NO CURB PAINT 6" WIDE RED STRIPE WITH 4" WHITE LETTERS AT 25' INTERVALS
   - "FIRE LANE - NO PARKING - TOW AWAY ZONE"

FIRE DEPARTMENT CONNECTION SIGN:

1. FIRE DEPARTMENT CONNECTION SHALL BE INSTALLED WITHIN 150' OF FIRE HYDRANT AND INSTALLED CLEARLY VISIBLE FROM A PUBLIC ACCESS STREET
2. SIGN PLATE SHALL BE MADE OF RUST-FREE ALUMINUM WITH UV RESISTANT, TWO-SIDED POLYESTER COATING.
3. THE SIGN PLATE SHALL BE A MINIMUM OF 12"x14" WITH A THICKNESS OF 0.40".
4. FDC LETTERING TO BE 6" HIGH
5. ADDRESS LETTERING TO BE 1.25" HIGH

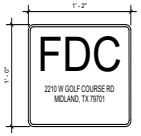

1 FIRE PROTECTION LAYOUT AND IDENTIFICATION

4.1218

PROFESSIONAL SEAL

REGISTERED ARCHITECT
JUSTIN E. MYERS
24640
STATE OF TEXAS

LOGO/CONTACT

martinez ARCHITECTS

Martinez Architect, LP
900 Rockmead, Suite 250
Houston, Texas 77339
281.346.7371

DESIGN TEAM

Architectural
Martinez Architects

Civil Engineer
Maverick Engineering

Structural
Matrix Structural Engineers

M/E/P/T
DBR

Landscape Architect
KDC Associates

FIRE STATION #5
CITY OF MIDLAND
2210 W GOLF COURSE RD
MIDLAND, TX 79701

PROJECT No: **MA 18017**
DATE: **16-JAN-2020**

ISSUE

75% CONSTRUCTION DOCUMENT
26-JUN-2019

100% ISSUE FOR PERMIT
30-JUL-2019

100% ISSUE FOR APPROVAL TO BID
16-JAN-2020

SITE CODE ANALYSIS

G 004

FIRE STATION 5

BEING A REPLAT OF LOTS 8 & 9, BLOCK 1 OUT OF BERKSHIRE PLACE ADDITION SECTION 3,
AN ADDITION TO THE CITY OF MIDLAND, MIDLAND COUNTY, TEXAS.

CIVIL CONSTRUCTION PLANS

ENGINEER'S GENERAL NOTES:

1. THESE PLANS ARE NOT TO BE USED FOR CONSTRUCTION PURPOSES UNLESS THE APPROVAL BLOCK HAS BEEN SIGNED BY THE APPROPRIATE AGENCIES. ALL WORK IS TO CONFORM TO THE CURRENT STANDARD SPECIFICATIONS, DETAILS AND SUPPLEMENTAL INFORMATION OF SAID AGENCY.
2. A THOROUGH ATTEMPT HAS BEEN MADE TO SHOW THE LOCATIONS OF ALL UNDERGROUND OBSTRUCTIONS AND UTILITY LINES IN THE WORK AREA. HOWEVER, THE CONTRACTOR IS RESPONSIBLE FOR ANY DAMAGE TO OBSTRUCTIONS AND UTILITY LINES ENCOUNTERED DURING CONSTRUCTION AND IS TO DETERMINE THE EXACT LOCATION OF ALL UTILITIES IN THE AREA.
3. THE ENGINEER MAKES NO REPRESENTATION OR GUARANTEE REGARDING EARTHWORK QUANTITIES OR THAT THE EARTHWORK FOR THIS PROJECT WILL BALANCE. SUCH A GUARANTEE IS NOT POSSIBLE DUE TO THE VARYING FIELD CONDITIONS, CHANGING SOIL TYPES, ALLOWABLE CONSTRUCTION TOLERANCES, AND CONSTRUCTION METHODS THAT ARE BEYOND THE CONTROL OF THE ENGINEER.
4. PRIOR TO BIDDING THE WORK, THE CONTRACTOR IS TO THOROUGHLY INVESTIGATE THE ACTUAL CONDITIONS OF THE SITE AND EARTHWORK QUANTITIES, IF ANY. NO CLAIM IS TO BE MADE AGAINST THE OWNER/DEVELOPER OR ENGINEER FOR ANY EXCESS OR DEFICIENCY IN EARTHWORK QUANTITIES, ACTUAL OR RELATIVE.
5. MAVERICK ENGINEERING MAKES NO REPRESENTATION AS TO THE PRESENCE OF ROCK WITHIN EXCAVATION AREAS. ANY EXCAVATION IS TO BE CONSIDERED UNCLASSIFIED EXCAVATION, AND THE PRESENCE OF ROCK IS ONE OF THE EXISTING CONDITIONS THE CONTRACTOR IS EXPECTED TO FULLY INVESTIGATE PRIOR TO BIDDING THE WORK. NO CLAIM WILL BE MADE AGAINST MAVERICK ENGINEERING OR THE OWNER BASED ON MATERIALS ENCOUNTERED.
6. THE ENGINEER WILL NOT BE RESPONSIBLE FOR CONSTRUCTION MEANS, METHODS, TECHNIQUES, SEQUENCES OR PROCEDURES OR FOR SAFETY PRECAUTIONS / PROGRAMS UTILIZED IN CONNECTION WITH THE WORK. THE ENGINEER IS NOT RESPONSIBLE IF THE CONTRACTOR FAILS TO CARRY OUT THE WORK IN ACCORDANCE WITH THE CONTRACT DOCUMENTS.
7. OWNER/CONTRACTOR IS RESPONSIBLE FOR SURVEY VERIFICATION OF EXISTING HORIZONTAL AND VERTICAL CONDITIONS PRIOR TO START OF CONSTRUCTION. A DEVIATION IN EXISTING CONDITIONS MUST BE BROUGHT TO THE IMMEDIATE ATTENTION OF MAVERICK ENGINEERING, BEFORE CONSTRUCTION STARTS. MAVERICK ENGINEERING WILL NOT BE RESPONSIBLE FOR REMOVAL, REPLACEMENT, OR OTHER MODIFICATIONS THAT MAY BE REQUIRED AS A RESULT OF EXISTING CONDITIONS NOT PROPERLY VERIFIED AND CONFIRMED. SHOULD AN ERROR BE FOUND IN THE HORIZONTAL & VERTICAL CONDITIONS, MAVERICK ENGINEERING WILL BE NOTIFIED AND CONSTRUCTION WILL NOT PROCEED UNTIL REVISIONS AND/OR MODIFICATIONS HAVE BEEN PREPARED AND SUBMITTED BY MAVERICK ENGINEERING.
8. OWNER/CONTRACTOR IS TO HAVE A PROFESSIONAL LAND SURVEYOR VERIFY FINISHED FLOOR ELEVATIONS PRIOR TO PLACING ANY FORM WORK OR CONCRETE. MAVERICK ENGINEERING WILL NOT BE RESPONSIBLE FOR REMOVAL, REPLACEMENT, OR OTHER MODIFICATIONS THAT MAY BE REQUIRED AS A RESULT OF THE FINISHED FLOOR NOT BEING PROPERLY VERIFIED.
9. IT IS THE CONTRACTOR'S RESPONSIBILITY TO COMPLY WITH EPA'S NPDES REGULATIONS 40-CFR-122, AND 40-CFR-123, AND 40-CFR-124 CONCERNING EROSION AND SEDIMENT CONTROL.
10. AN APPROVED GRADING AND DRAINAGE PLAN IS TO BE MAINTAINED ON SITE AT ALL TIMES. THIS IS TO BE MADE AVAILABLE TO INSPECTORS UPON REQUEST.
11. MAVERICK DOES NOT PROVIDE BUILDING FOUNDATION DESIGNS. REFER TO STRUCTURAL PLANS AND / OR GEOTECHNICAL REPORT FOR MATERIAL AND COMPACTION REQUIREMENTS UNDERNEATH BUILDING SLABS / STRUCTURAL FOUNDATIONS. MAKE NOTE IF SAID PLANS CALL FOR ADDITIONAL MATERIALS OR COMPACTION OR SIDEWALK IMMEDIATELY ADJACENT TO THE STRUCTURE / FOUNDATION.

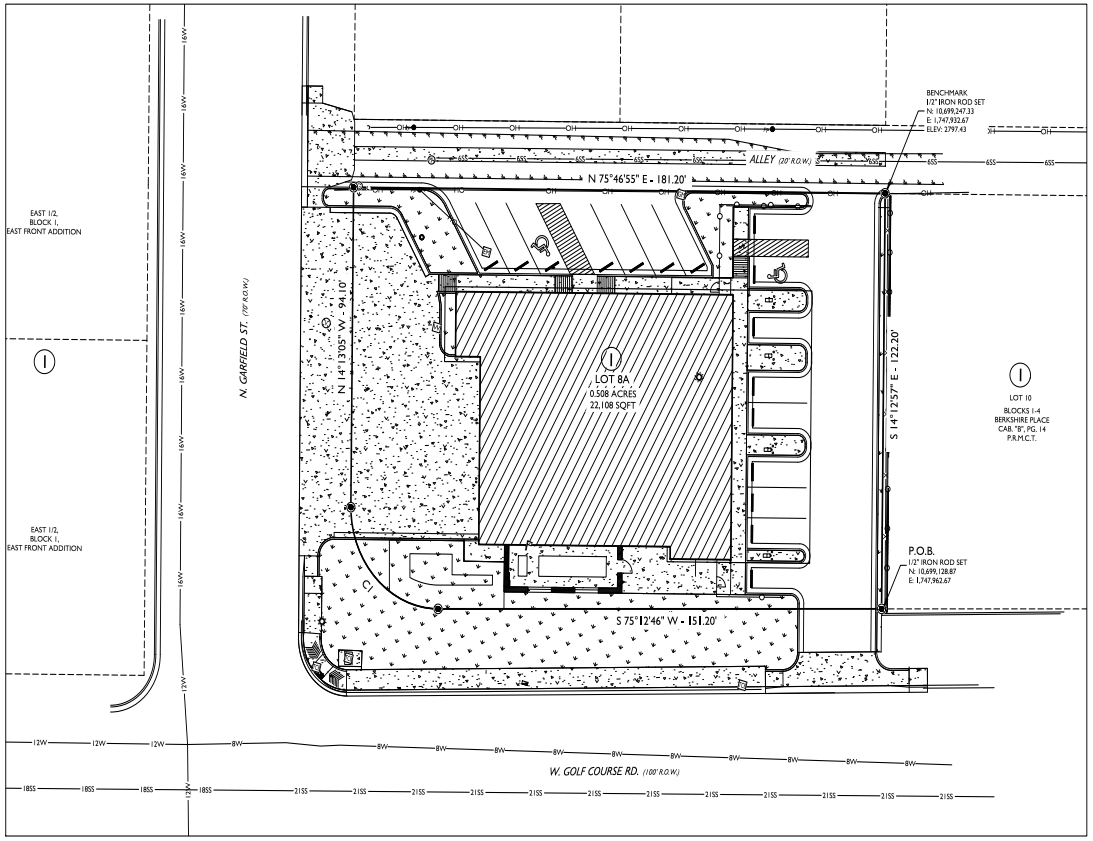

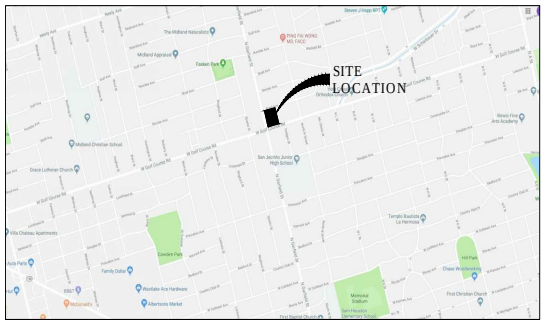

VICINITY MAP
N.T.S.

SHEET INDEX:

COVER SHEET C100
FINAL PLAT C110
EXISTING SITE TOPOGRAPHY C111
SWPPP C120
SWPPP DETAILS C130
DIMENSION PLAN C200
PAVING PLAN C210
PAVING DETAILS C220
PAVING DETAILS C221
PAVING DETAILS C222
GRADING PLAN C230
DRAINAGE PLAN C240
UTILITY PLAN C300
WATER DETAILS C310
WATER DETAILS C311
SEWER DETAILS C320
BARRICADE DETAILS C500
SIGN DETAILS C501

0' 20' 40' 60'
SCALE 1" = 20'

ENGINEER:

ANDREW L. MELLEN, P.E.
MAVERICK ENGINEERING
1909 WEST WALL STREET, STE. K
MIDLAND, TX 79701
TELEPHONE: (432) 262-0999

BENCHMARK:

BEARINGS, DISTANCES AND COORDINATES SHOWN ARE LAMBERT GRID WHICH IS RELATIVE TO THE TEXAS STATE PLANE COORDINATE SYSTEM, TEXAS CENTRAL ZONE, NAD 1983. ELEVATIONS ARE BASED ON GPS OBSERVATIONS CONFORMING TO NAVD 1988.
TEMPORARY BENCHMARK #1:
½" IRON ROD
N: 10,699,247.33
E: 1,747,932.67
ELEVATION: 2797.43

SURVEY PERFORMED BY WESLEY HUNTER, RPLS. CONTACT MAVERICK SURVEY, LLC. FOR ADDITIONAL BENCHMARKS OR CONTROL STAKING 432-262-0999

811 Know what's below. Call before you dig.

MAVERICK ENGINEERING
1909 West Wall Street, Suite "K"
Midland, Texas 79701
Tel: (432) 262-0999 Fax: (432) 262-0989
www.Maverick-Engr.com
TBPE#: F-15089

NO.	REVISIONS	BY:	APPR.	DATE
1				

DRAWN BY: CLB
CHECKED BY: ALM
APPROVED BY: ALM
DATE: 05/07/2019
JOB: 180217

COVER SHEET
FIRE STATION 5
LOT 08, BLOCK 01, BERKSHIRE PLACE ADDITION, SECTION 22
AN ADDITION TO THE CITY OF MIDLAND,
MIDLAND COUNTY, TEXAS.

PRELIMINARY REVIEW:

THESE PLANS ARE RELEASED UNDER THE SEAL OF ANDREW L. MELLEN, P.E. #108572 AND MAVERICK ENGINEERING (FIRM # F-15089) ON THIS DAY 05/07/2019, FOR THE PURPOSES OF INTERIM/PRELIMINARY REVIEW. THEY SHALL NOT BE USED FOR THE PURPOSES OF CONSTRUCTION.

SHEET C100 OF 19

P:\2018\180217-MARTINEZ ARCHITECTS-FIRE STATION 5 CONS\DRAWINGS\CIVIL CONSTRUCTION PLANS\180217 C100 COVER SHEET.DWG

© COPYRIGHT 2018 ALL RIGHTS RESERVED

4.1219

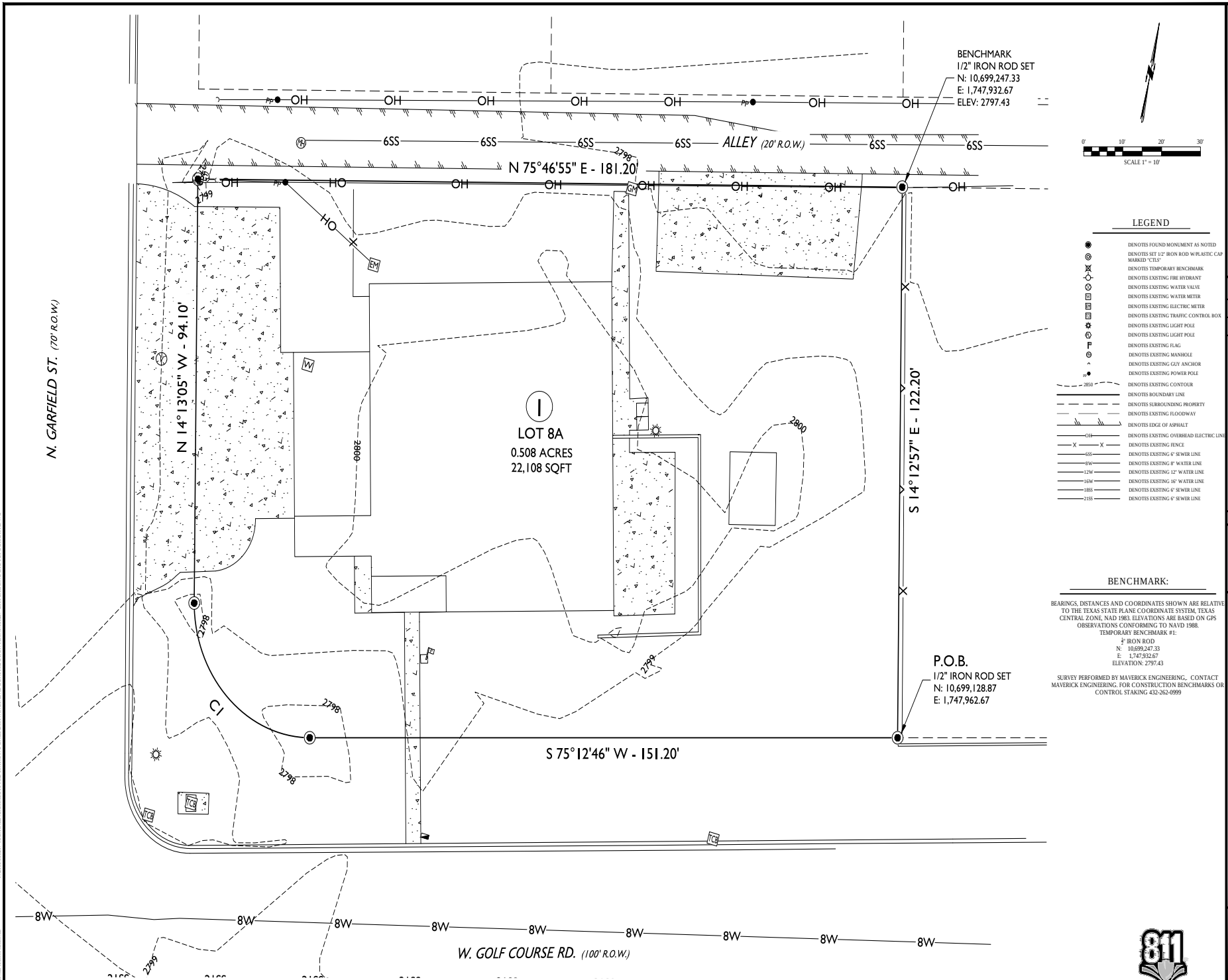

BENCHMARK:

BEARINGS, DISTANCES AND COORDINATES SHOWN ARE RELATIVE TO THE TEXAS STATE PLANE COORDINATE SYSTEM, TEXAS CENTRAL ZONE, NAD 1983. ELEVATIONS ARE BASED ON GPS OBSERVATIONS CONFORMING TO NAVD 1988.
TEMPORARY BENCHMARK #1:
½" IRON ROD
N: 10,699,247.33
E: 1,747,932.67
ELEVATION: 2797.43

SURVEY PERFORMED BY MAVERICK ENGINEERING,. CONTACT MAVERICK ENGINEERING, FOR CONSTRUCTION BENCHMARKS OR CONTROL STAKING 432-262-0999

Know what's below. Call before you dig.

MAVERICK ENGINEERING
1909 West Wall Street, Suite "K"
Midland, Texas 79701
Tel: (432) 262-0999 Fax: (432) 262-0989
www.Maverick-Engr.com
TBPELS FIRM: F-15089

BY	APPR.	DATE

REVISIONS

DRAWN BY: CLB
CHECKED BY: ALM
APPROVED BY: ALM
DATE: 05/07/2019
JOB: 180217

EXISTING SITE TOPOGRAPHY

FIRE STATION 5

LOT 08, BLOCK 01, BERKSHIRE PLACE ADDITION, SECTION 22
AN ADDITION TO THE CITY OF MIDLAND,
MIDLAND COUNTY, TEXAS.

SURVEY NOTE:
THE SURVEY SHOWN ON THIS SHEET IS INCLUDED FOR REFERENCE PURPOSES ONLY. THE SEALING PROFESSIONAL TAKING RESPONSIBILITY FOR THE SURVEY IS NOTED THERE ON.

SHEET C111 OF 19

4.1220

© COPYRIGHT 2018 ALL RIGHTS RESERVED

P:\2018\180217-MARTINEZ ARCHITECTS-FIRE STATION 5 CONS\DRAWINGS\CIVIL CONSTRUCTION PLANS\180217 C111 EXISTING SITE TOPOGRAPHY.DWG

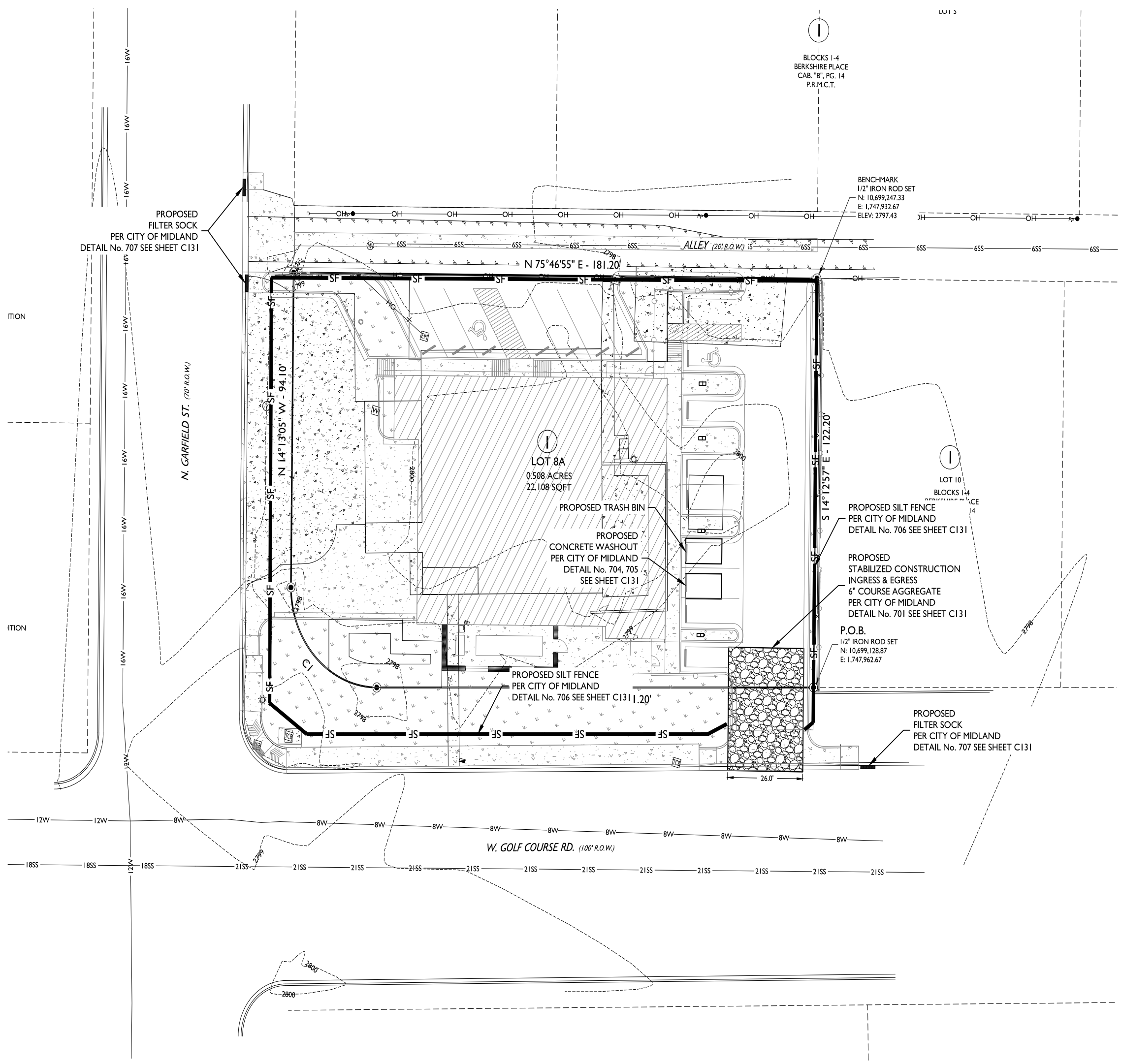

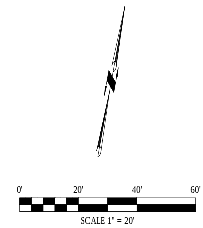

LEGEND

- DENOTES FOUND MONUMENT AS NOTED
- DENOTES SET 1/2" IRON ROD W/PLASTIC CAP MARKED "CTLS"
- DENOTES TEMPORARY BENCHMARK
- DENOTES EXISTING FIRE HYDRANT
- DENOTES EXISTING WATER VALVE
- DENOTES EXISTING WATER METER
- DENOTES EXISTING ELECTRIC METER
- DENOTES EXISTING TRAFFIC CONTROL BOX
- DENOTES EXISTING LIGHT POLE
- DENOTES EXISTING LIGHT POLE
- DENOTES EXISTING FLAG
- DENOTES EXISTING MANHOLE
- DENOTES EXISTING GUY ANCHOR
- DENOTES EXISTING POWER POLE
- 2850 DENOTES EXISTING CONTOUR
- DENOTES BOUNDARY LINE
- DENOTES SURROUNDING PROPERTY
- DENOTES EXISTING FLOODWAY
- DENOTES EDGE OF ASPHALT
- OH DENOTES EXISTING OVERHEAD ELECTRIC LINE
- DENOTES EXISTING FENCE
- 6SS DENOTES EXISTING 6" SEWER LINE
- 8W DENOTES EXISTING 8" WATER LINE
- 12W DENOTES EXISTING 12" WATER LINE
- 16W DENOTES EXISTING 16" WATER LINE
- 18SS DENOTES EXISTING 6" SEWER LINE
- 21SS DENOTES EXISTING 6" SEWER LINE
- SF DENOTES PROPOSED SILT FENCE
- DENOTES PROPOSED CONSTRUCTION ENTRANCE

SWPPP GENERAL NOTES:

1. IT IS THE INTENT OF THE INFORMATION PROVIDED ON THIS SHEET AND WITHIN THE SPECIFICATIONS TO BE USED AS THE GENERAL GUIDELINES OF THE STORM WATER POLLUTION PREVENTION PLAN FOR THIS PROJECT AND TO ESTABLISH A MINIMUM BASIS OF COMPLIANCE WITH TPDES REGULATIONS. THE CONTRACTOR IS TO FILE NOTICE OF INTENT (NOI) UNDER TDPES CONSTRUCTION GENERAL PERMIT, TXR 150000.
2. THE STORM WATER POLLUTION PREVENTION PLAN SHOULD ADDRESS THREE GOALS: TO DIVERT WATER FROM UPSLOPE AREAS AROUND DISTURBED AREAS OF THE SITE, TO LIMIT EXPOSURE OF DISTURBED AREAS TO THE SHORTEST DURATION POSSIBLE, AND TO REMOVE SEDIMENT FROM STORM WATER BEFORE IT LEAVES THE SITE.
3. THE CONTRACTOR IS TO MAKE THE STORM WATER POLLUTION PREVENTION PLAN AVAILABLE, UPON REQUEST, TO THE TCEQ.
4. THE CONTRACTOR MUST AMEND THE STORM WATER POLLUTION PREVENTION PLAN WHENEVER THERE IS A CHANGE IN DESIGN, CONSTRUCTION, OPERATION, MAINTENANCE OF THE PLAN, OR WHEN THE EXISTING PLAN PROVES INEFFECTIVE. MODIFICATIONS INCLUDING DESIGN AND ALL ADDITIONAL MATERIALS AND WORK IS TO BE ACCOMPLISHED BY THE CONTRACTOR AT NO ADDITIONAL EXPENSE TO THE OWNER. NO CHANGE TO EROSION CONTROL MEASURES SHOWN ON THESE PLANS AND SPECIFICATIONS SHALL BE MADE WITHOUT CONSENT OF OWNER AND ENGINEER.
5. STABILIZATION MEASURES ARE TO BE INSPECTED AT A MINIMUM OF ONCE EVERY SEVEN DAYS AND WITHIN 24 HOURS AFTER ANY STORM EVENT GREATER THAN 0.5 INCHES. REPAIRS OF INADEQUACIES REVEALED BY THE INSPECTIONS MUST BE IMPLEMENTED WITHIN SEVEN CALENDAR DAYS FOLLOWING THE INSPECTION.
6. AN INSPECTION REPORT THAT SUMMARIZES INSPECTION ACTIVITIES AND IMPLEMENTATION OF THE STORM WATER POLLUTION PREVENTION PLAN IS TO BE MAINTAINED AND MADE PART OF THE PLAN.
7. ALL CONTRACTORS AND SUBCONTRACTORS IDENTIFIED IN THE PLAN MUST CERTIFY AS TO AN UNDERSTANDING OF THE NPDES CONSTRUCTION GENERAL PERMIT BEFORE CONDUCTING ANY ACTIVITY IDENTIFIED IN THE STORM WATER POLLUTION PREVENTION PLAN.
8. THE CONTRACTOR IS TO ADOPT APPROPRIATE CONSTRUCTION SITE MANAGEMENT PRACTICES TO PREVENT THE DISCHARGE OF OILS, GREASE, PAINTS, GASOLINE, AND OTHER POLLUTANTS TO STORM WATER. APPROPRIATE PRACTICES CAN INCLUDE: DESIGNATING AREAS FOR EQUIPMENT MAINTENANCE AND REPAIR, REGULAR COLLECTION OF WASTES, CONVENIENTLY LOCATED WASTE RECEPTACLES, AND DESIGNATION OF CONTROL EQUIPMENT WASHING.
9. THE CONTRACTOR IS TO AMEND OR MODIFY THIS PLAN AS REQUIRED BY CONSTRUCTION MEANS, METHODS, AND SEQUENCE. MODIFICATIONS ARE NOT TO COMPROMISE THE INTENT OR THE REQUIREMENTS OF THE LAW AND THIS PLAN. MODIFICATIONS ARE NOT TO BE A BASIS FOR ADDITIONAL COST TO THE OWNER.
10. AREAS OF CONSTRUCTION ELSEWHERE ON THE JOB SITE ARE TO CONFORM TO THE DETAILS SHOWN ON THE PLANS.
11. BORROW AREAS, IF EXCAVATED, ARE TO BE PROTECTED AND STABILIZED UTILIZING THE PLAN DETAILS. ALL WORK IS TO CONFORM TO GOVERNMENTAL REQUIREMENTS AND BECOME PART OF THE STORM WATER POLLUTION PREVENTION PLAN. THIS WORK IS TO BE DONE BY THE CONTRACTOR AT NO ADDITIONAL EXPENSE TO THE OWNER OR THE ENGINEER.
12. ALL NON-PAVED AREAS ARE TO BE MULCHED AND SEEDED WITH EROSION PROTECTION IMMEDIATELY UPON COMPLETION OF FINAL GRADING. THIS INCLUDES ALL DITCHES AND EMBANKMENTS. THE CONTRACTOR IS TO MAINTAIN THE FINAL GRADING AND KEEP SEEDED AREAS WATERED UNTIL FULLY ESTABLISHED AND ACCEPTED BY THE OWNER; EROSION PROTECTION IS TO BE CONSTRUCTED AS DETAILED ON THIS SHEET.
13. THE CONTRACTOR IS TO CONSTRUCT A STABILIZED CONSTRUCTION ENTRANCE AT ALL TRAFFIC ENTRANCE / EXIT POINTS ALONG ANY PAVED ROADWAY. ENTRANCES ARE TO BE CONSTRUCTED AS DETAILED ON THIS SHEET.
14. THE CONTRACTOR IS TO CONSTRUCT A SILT FENCE AT ALL LOCATIONS SHOWN ON THE PLANS. THE SILT FENCE IS TO BE CONSTRUCTED AS DETAILED ON THIS SHEET.
15. THE CONTRACTOR IS TO DESIGNATE MATERIAL AND EQUIPMENT STORAGE AREAS MUTUALLY AGREED TO BY THE OWNER. THE STORAGE AREAS ARE TO BE GRADED FOR POSITIVE DRAINAGE AND THE SURFACE STABILIZED WITH A MINIMUM OF TWO INCHES OF CRUSHED ROCK OR GRAVEL. REINFORCED FILTER BARRIER IS TO BE INSTALLED AROUND THE STORAGE AREAS TO PREVENT ANY EROSION FROM LEAVING THE SITE.
16. IN ACCORDANCE WITH PARTS III.G.1 & III.G.2 OF THE CONSTRUCTION STORMWATER GENERAL PERMIT, STABILIZATION OF ALL DISTURBED AREAS MUST, AT A MINIMUM, BE INITIATED IMMEDIATELY (I.E., AS SOON AS PRACTICABLE, BUT NO LATER THAN THE END OF NEXT WORK DAY) WHENEVER ANY EARTHWORK ACTIVITIES HAVE PERMANENTLY CEASED ON ANY PORTION OF THE SITE. THE CITY OF MIDLAND WILL NOT SUPPORT A CERTIFICATE OF OCCUPANCY UNLESS THIS REQUIREMENT HAS BEEN FULFILLED. CONTRACTOR WARNING: THIS REQUIREMENT IS STRICTLY ENFORCED.

SOIL STABILIZATION NOTES:

- ALL DISTURBED AREAS ARE TO BE SEEDED AT A RATE OF 20 LBS/ACRE FOXTAIL MILLET, 2 LBS/ACRE BUFFALO GRASS, 1 LBS/ACRE LITTLE BLUESTEM, AND 1 LBS/ACRE SIDE OATS GRAMMA, OR OTHER DROUGHT TOLERANT MIXTURE APPROVED BY THE CITY ENGINEER. ALL SEEDED AREAS ARE TO BE FERTILIZED AS SPECIFIED BY THE CITY OF MIDLAND PARKS DEPARTMENT AT TIME OF PLANTING.
- AFTER DESIGNATED AREAS HAVE BEEN COMPLETED TO THE GRADES SHOWN ON THE PLANS, AREAS TO BE SEEDED ARE TO BE CULTIVATED TO A DEPTH OF 4 INCHES, EXCEPT WHERE SEEDING IS TO BE DONE USING A SEED DRILL SUITABLE FOR SEEDING INTO UNTILLED SOIL. THE SEEDBEDS ARE TO BE CULTIVATED SUFFICIENTLY TO REDUCE THE SOIL TO A STATE OF GOOD TILTH WHEN THE SOIL PARTICLES ON THE SURFACE ARE SMALL ENOUGH TO LIE CLOSELY ENOUGH TOGETHER TO PREVENT THE SEED FROM BEING COVERED TOO DEEPLY FOR OPTIMUM GERMINATION. CULTIVATION OF THE SEEDBED WILL NOT BE REQUIRED IN LOOSE SAND WHERE DEPTH OF SAND IS 4 INCHES OR MORE.
- AFTER SEEDING, CHANNEL EMBANKMENTS ARE TO BE LINED WITH A STRAW OR STRAW/COCONUT SOIL RETENTION BLANKET. THE FOLLOWING PRODUCTS, OR AN EQUAL APPROVED BY THE CITY ENGINEER MAY BE USED;
  - ECS S-1 STANDARD STRAW
  - ECS HIGH VELOCITY STRAW
  - LANDLOK BON-TERRA S2, ENS2 OR ENCS2
  - NORTH AMERICAN GREEN S75, S75BN, S150, S150BN, OR SC150
  - ALTERNATELY, SOILGUARD BONDED FIBER MATRIX MAY BE USED.
- BLANKETS ARE TO BE PLACED PARALLEL TO THE DIRECTION OF WATER FLOW. BLANKETS ARE TO BE SPREAD EVENLY WITHOUT STRETCHING SO FIBERS ARE IN DIRECT CONTACT WITH THE SOIL.
- THE UPSLOPE END OF EACH BLANKET IS TO BE BURIED AT LEAST 6 INCHES IN A VERTICAL TRENCH WITH THE SOIL PRESSED FIRMLY AGAINST THE EMBEDDED MAT. ADDITIONAL CHECK TRENCHES AT 50 FEET INTERVALS MAY BE DESIRABLE ON STEEP GRADES OR LONG FLOW AREAS.
- STRIP ENDS AND END OVERLAPS ARE TO BE STAPLED WITH NOT MORE THAN 20 INCHES BETWEEN STAPLES. ALL OTHER JOINTS AND EDGES ARE TO BE STAPLED AT 40 INCH INTERVALS.
- STAPLES USED TO ANCHOR BLANKETS ARE TO BE U SHAPED, 11 GAUGE OR HEAVIER STEEL WIRE HAVING A SPAN WIDTH OF 1 INCH AND A LENGTH OF 6 INCHES OR MORE FROM TOP TO BOTTOM AFTER BENDING.
- IF SOILGUARD BONDED FIBER MATRIX IS CHOSEN, INSTALLATION IS TO CONFORM TO MANUFACTURERS RECOMMENDATIONS.
- DISTURBED AREAS OUTSIDE THE CHANNEL ARE TO BE TREATED WITH A HYDRAULICALLY-APPLIED MULCH AT A RATE OF 2,000 LBS/ACRE.

SWPPP DETAILS:

SWPPP DETAILS ARE INCLUDED ON THE NEXT SHEET. PLEASE REFER TO THOSE DETAILS.

811 Know what's below. Call before you dig.

MAVERICK ENGINEERING
1909 West Wall Street, Suite "K"
Midland, Texas 79701 FIRM: F-15089
Tel: (432) 262-0999 Fax: (432) 262-0989
www.Maverick-Eng.com

DATE	APPR.	BY	REVISIONS

DRAWN BY: CLB
CHECKED BY: ALM
APPROVED BY: ALM
DATE: 05/07/2019
JOB: 180217

SWPPP

FIRE STATION 5

LOT 08, BLOCK 01, BERKSHIRE PLACE ADDITION, SECTION 22 AN ADDITION TO THE CITY OF MIDLAND, MIDLAND COUNTY, TEXAS.

PRELIMINARY REVIEW:

THESE PLANS ARE RELEASED UNDER THE SEAL OF ANDREW L. MELLEN, P.E. #106572 AND MAVERICK ENGINEERING (FIRM # F-15089) ON THIS DAY 05/07/2019, FOR THE PURPOSES OF INTERIM/PRELIMINARY REVIEW. THEY SHALL NOT BE USED FOR THE PURPOSES OF CONSTRUCTION.

SHEET C120 OF 19

F:\2018\180217-MARTINEZ ARCHITECTS-FIRE STATION 5 CIVIL\DRAWINGS\CIVIL CONSTRUCTION PLANS\180217 C120 SWPPP.DWG
© COPYRIGHT 2018 ALL RIGHTS RESERVED

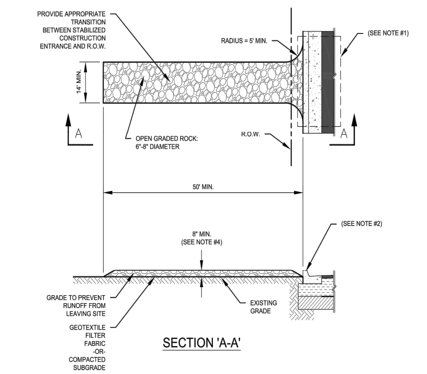

SECTION 'A-A'

NOTES:

1. IF CURB DOES NOT EXIST OR IF EXISTING CURB IS REMOVED DURING CONSTRUCTION THEN STABILIZED CONSTRUCTION ENTRANCE IS TO EXTEND TO THE EDGE OF PAVEMENT.
2. IF CURB IS LEFT IN PLACE DURING CONSTRUCTION THEN INSTALL TEMPORARY CURB PROTECTION AS PER CITY DETAIL 713.
3. LENGTH SHALL BE AS SHOWN ON THE CONSTRUCTION DRAWINGS, BUT NOT LESS THAN FIFTY (50) FEET.
4. THICKNESS OF OPEN GRADED ROCK TO BE NO LESS THAN EIGHT (8) INCHES.
5. WIDTH SHALL BE NO LESS THAN FOURTEEN (14) FEET OR THE FULL WIDTH OF ALL POINTS OF INGRESS OR EGRESS, WHICHEVER IS WIDER.
6. STABILIZED CONSTRUCTION ENTRANCE TO BE REMOVED UPON COMPLETION OF CONSTRUCTION.
7. MATERIALS AND CONSTRUCTION METHODS TO CONFORM TO CITY OF MIDLAND STANDARDS AND SPECIFICATIONS
8. CONSTRUCT AS SHOWN UNLESS OTHERWISE APPROVED IN WRITING BY THE CITY ENGINEER.

DRAWN: DPM	CHECKED: JCF	APPROVED: MCC	
MIDLAND Engineering Services	EFFECTIVE DATE: 10/01/2018	SCALE: NTS	DETAIL:
	STABILIZED CONSTRUCTION ENTRANCE OPTION 1		701

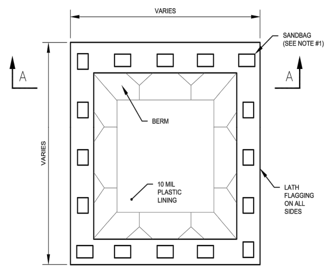

DEPRESSED WASHOUT

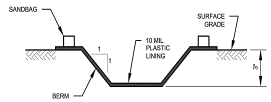

SECTION 'A-A'

NOTES:

1. SECURE WASHOUT STRUCTURES AND LININGS WITH SANDBAGS OR TWO SECURELY FASTENED STAKES AROUND ENTIRE WASHOUT PERIMETER.
2. MATERIALS AND CONSTRUCTION METHODS TO CONFORM TO CITY OF MIDLAND STANDARDS AND SPECIFICATIONS.
3. CONSTRUCT AS SHOWN UNLESS OTHERWISE APPROVED IN WRITING BY THE CITY ENGINEER.

DRAWN: DPM	CHECKED: JCF	APPROVED: MCC	
MIDLAND Engineering Services	EFFECTIVE DATE: 10/01/2018	SCALE: NTS	DETAIL:
	CONCRETE WASHOUT OPTION 1		704

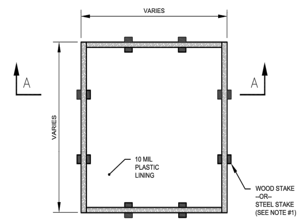

ELEVATED WASHOUT

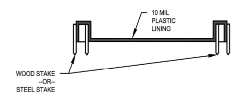

SECTION 'A-A'

NOTES:

1. THIS WASHOUT CONFIGURATION MAY NOT BE USED IN PAVED AREAS.
2. WOOD FRAME IS TO BE EQUAL TO OR BETTER THAN TWO-STACKED 2X12 ROUGH WOOD FRAME.
3. MATERIALS AND CONSTRUCTION METHODS TO CONFORM TO CITY OF MIDLAND STANDARDS AND SPECIFICATIONS.
4. CONSTRUCT AS SHOWN UNLESS OTHERWISE APPROVED IN WRITING BY THE CITY ENGINEERING.

DRAWN: DPM	CHECKED: JCF	APPROVED: MCC	
MIDLAND Engineering Services	EFFECTIVE DATE: 10/01/2018	SCALE: NTS	DETAIL:
	CONCRETE WASHOUT OPTION 2		705

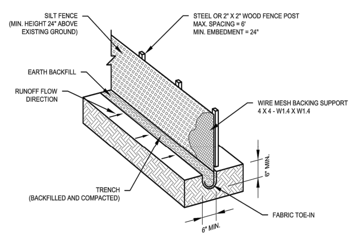

NOTES:

1. THIS DETAIL IS TO BE USED FOR SHEET FLOW CONDITIONS ONLY. DO NOT USE SILT FENCE FOR POINT FLOW OR CONCENTRATED FLOW CONDITIONS.
2. INSTALL STEEL OR WOOD POSTS, WHICH SUPPORT THE SILT FENCE, WITH A SLIGHT ANGLE TOWARD THE ANTICIPATED RUNOFF SOURCE. POSTS MUST BE EMBEDDED A MINIMUM OF ONE (1) FOOT.
3. TRENCH THE TOE OF THE SILT FENCE IN WITH A SPADE OR MECHANICAL TRENCHER, SO THAT THE DOWNSLOPE FACE OF THE TRENCH IS FLAT AND PERPENDICULAR TO THE LINE OF FLOW. WHERE THE FENCE CANNOT BE TRENCHED IN (E.G.PAVEMENT), WEIGHT DOWN FABRIC FLAP WITH WASHED GRAVEL ON UPHILL SIDE TO PREVENT FLOW UNDER FENCE.
4. THE TRENCH MUST BE A MINIMUM OF SIX (6) INCHES DEEP AND SIX (6) INCHES WIDE TO ALLOW FOR THE SILT FENCE FABRIC TO BE LAID IN THE GROUND AND BACKFILLED WITH COMPACTED MATERIAL.
5. SECURELY FASTEN SILT FENCE TO EACH STEEL SUPPORT POST OR TO WOVEN WIRE, WHICH IN TURN IS TO BE ATTACHED TO THE STEEL OR WOOD FENCE POST. INCLUDE A SIX (6) INCH DOUBLE OVERLAP, SECURELY FASTENED, WHERE ENDS OF FABRIC MEET.
6. REMOVE SILT FENCE WHEN THE SITE IS COMPLETELY STABILIZED SO AS NOT TO BLOCK OR IMPEDE STORM FLOW OR DRAINAGE.
7. REMOVE ACCUMULATED SILT WHEN IT REACHES A DEPTH OF SIX (6) INCHES. DISPOSE OF THE SILT ONSITE IN AN APPROVED LOCATION AND IN SUCH A MANNER AS TO NOT CONTRIBUTE TO ADDITIONAL SILTATION.
8. MATERIALS AND CONSTRUCTION METHODS TO CONFORM TO CITY OF MIDLAND STANDARDS AND SPECIFICATIONS.
9. CONSTRUCT AS SHOWN UNLESS OTHERWISE APPROVED IN WRITING BY THE CITY ENGINEER.

DRAWN: DPM	CHECKED: JCF	APPROVED: MCC	
MIDLAND Engineering Services	EFFECTIVE DATE: 10/01/2018	SCALE: NTS	DETAIL:
	SILT FENCE		706

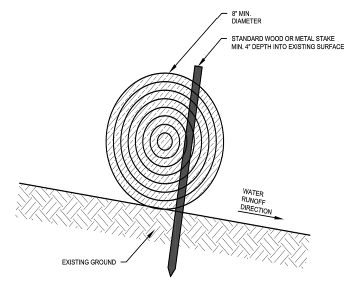

NOTES:

1. THIS DETAIL IS TO USED FOR SHEET FLOW CONDITIONS ONLY. DO NOT USE FILTER SOCK FOR POINT FLOW OR CONCENTRATED FLOW CONDITIONS.
2. DO NOT USE FILTER SOCK FOR SHEET FLOW WATERSHEDS LARGER THAN ONE (1) ACRE.
3. USE POLYPROPYLENE NETTING, BURLAP, OR JUTE FABRIC TO CONSTRUCT THE FILTER SOCK.
4. FILL FILTER SOCK WITH STRAW, HAY, COCONUT FIBER, OR COMPOSITE MATERIAL.
5. PLACE STAKING EVERY THREE (3) TO FOUR (4) FEET AT A MINIMUM.
6. MATERIALS AND CONSTRUCTION METHODS TO CONFORM TO CITY OF MIDLAND STANDARDS AND SPECIFICATIONS.
7. CONSTRUCT AS SHOWN UNLESS OTHERWISE APPROVED IN WRITING BY THE CITY ENGINEER.

DRAWN: DPM	CHECKED: JCF	APPROVED: MCC	
MIDLAND Engineering Services	EFFECTIVE DATE: 10/01/2018	SCALE: NTS	DETAIL:
	FILTER SOCK		707

MAVERICK ENGINEERING
1909 West Wall Street, Suite "K"
Midland, Texas 79701 FIRM: F-15089
Tel: (432) 262-0999 Fax: (432) 262-0989
www.Maverick-Eng.com

REVISIONS	BY	APPR.	DATE

DRAWN BY: CLB
CHECKED BY: ALM
APPROVED BY: ALM
DATE: 05/07/2019
JOB: 180217

SWPPP DETAILS

FIRE STATION 5

LOT 08, BLOCK 01, BERKSHIRE PLACE ADDITION, SECTION 22
AN ADDITION TO THE CITY OF MIDLAND,
MIDLAND COUNTY, TEXAS.

PRELIMINARY REVIEW:

THESE PLANS ARE RELEASED UNDER THE SEAL OF ANDREW L. MELLEN, P.E. #106572 AND MAVERICK ENGINEERING (FIRM # F-15089) ON THIS DAY 05/07/2019, FOR THE PURPOSES OF INTERIM/PRELIMINARY REVIEW. THEY SHALL NOT BE USED FOR THE PURPOSES OF CONSTRUCTION.

SHEET C130 OF 19

F:\2018\180217-MARTINEZ ARCHITECTS-FIRE STATION 5 CIVIL\DRAWINGS\CIVIL CONSTRUCTION PLANS\180217 C130 SWPPP DETAILS.DWG

© COPYRIGHT 2018 ALL RIGHTS RESERVED

4.1222

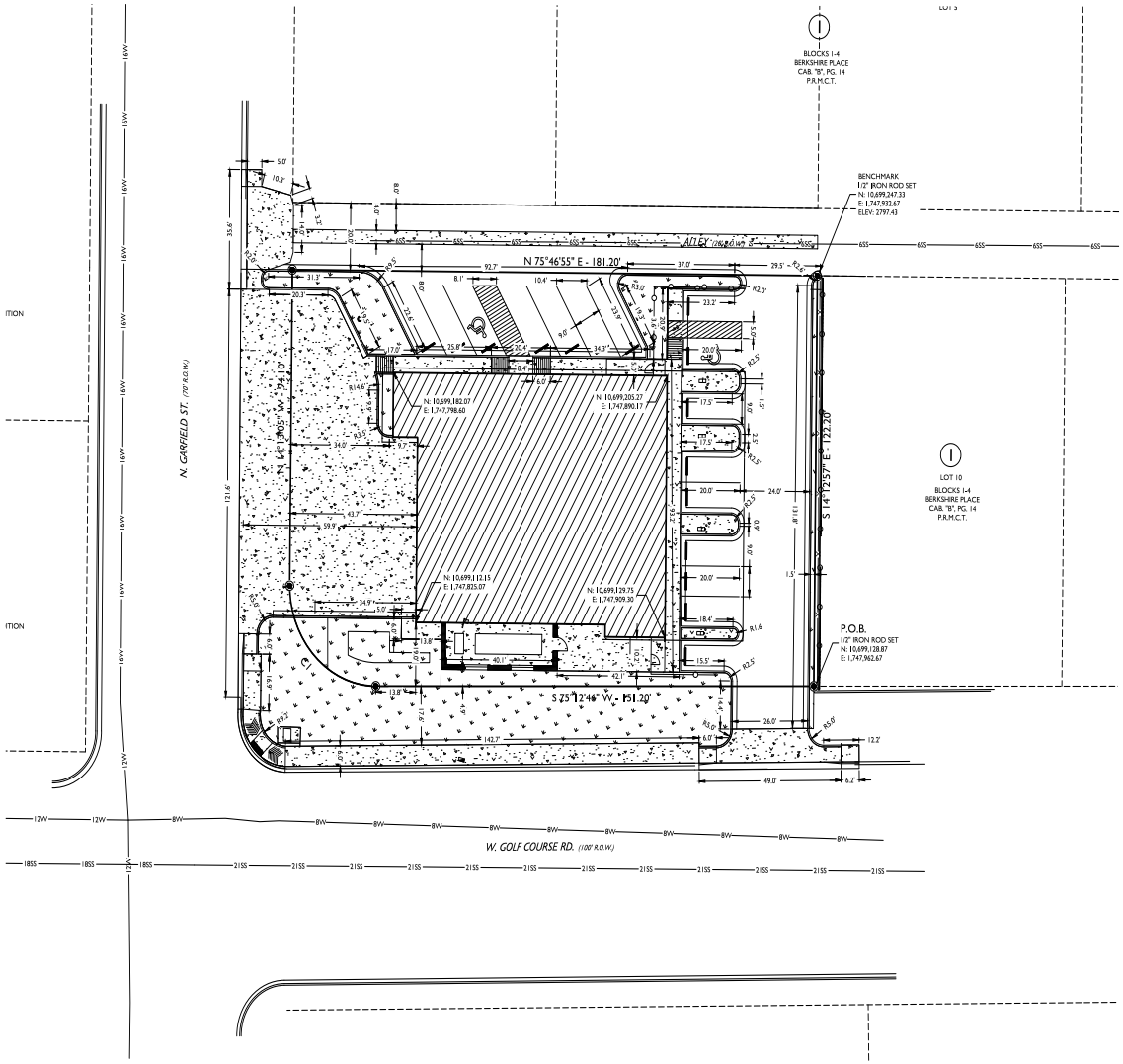

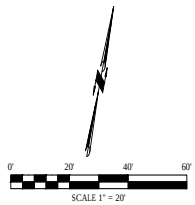

LEGEND

- DENOTES FOUND MONUMENT AS NOTED
- DENOTES SET 1/2" IRON ROD W/PLASTIC CAP MARKED "CTLS"
- DENOTES TEMPORARY BENCHMARK
- DENOTES EXISTING FIRE HYDRANT
- DENOTES EXISTING WATER VALVE
- DENOTES EXISTING WATER METER
- DENOTES EXISTING ELECTRIC METER
- DENOTES EXISTING TRAFFIC CONTROL BOX
- DENOTES EXISTING LIGHT POLE
- DENOTES EXISTING LIGHT POLE
- DENOTES EXISTING FLAG
- DENOTES EXISTING MANHOLE
- DENOTES EXISTING GUY ANCHOR
- DENOTES EXISTING POWER POLE
- 2850 — DENOTES EXISTING CONTOUR
- DENOTES BOUNDARY LINE
- DENOTES SURROUNDING PROPERTY
- DENOTES EXISTING FLOODWAY
- DENOTES EDGE OF ASPHALT
- OH — DENOTES EXISTING OVERHEAD ELECTRIC LINE
- DENOTES EXISTING FENCE
- 6SS — DENOTES EXISTING 6" SEWER LINE
- 8W — DENOTES EXISTING 8" WATER LINE
- 12W — DENOTES EXISTING 12" WATER LINE
- 16W — DENOTES EXISTING 16" WATER LINE
- 18SS — DENOTES EXISTING 6" SEWER LINE
- 21SS — DENOTES EXISTING 6" SEWER LINE

DIMENSIONAL NOTE:

DIMENSIONS SHOWN ARE TYPICALLY TO BACK OF CURB UNLESS NOTED OTHERWISE.

CONTRACTOR TO USE STRUCTURAL & ARCHITECTURAL PLANS TO CONFIRM BUILDING LAYOUT. MAVERICK ENGINEERING IS NOT RESPONSIBLE FOR BUILDING LAYOUT.

Know what's below.
Call before you dig.

MAVERICK ENGINEERING
1909 West Wall Street, Suite "K"
Midland, Texas 79701 FIRM: F-15089
Tel: (432) 262-0993 Fax: (432) 262-0989
www.Maverick-Engr.com

NO.	REVISIONS	BY	APPR.	DATE

DRAWN BY: CLB
CHECKED BY: ALM
APPROVED BY: ALM
DATE: 05/07/2019
JOB: 180217

DIMENSIONAL PLAN
FIRE STATION 5
LOT 08, BLOCK 01, BERKSHIRE PLACE ADDITION, SECTION 22
AN ADDITION TO THE CITY OF MIDLAND,
MIDLAND COUNTY, TEXAS.

PRELIMINARY REVIEW:

THESE PLANS ARE RELEASED UNDER THE SEAL OF ANDREW L. MELLIN, P.E. #108172 AND MAVERICK ENGINEERING (FIRM # F-15089) ON THIS DAY 05/07/2019, FOR THE PURPOSES OF INTERIM/PRELIMINARY REVIEW. THEY SHALL NOT BE USED FOR THE PURPOSES OF CONSTRUCTION.

SHEET C200 OF 19

F:\2018\180217-MARTINEZ ARCHITECTS-FIRE STATION 5 CUMULS\DRAWINGS\CIVIL CONSTRUCTION PLANS\180217 C200 DIMENSIONAL PLAN.DWG

© COPYRIGHT 2018 ALL RIGHTS RESERVED

4.1223

CONCRETE JOINTING NOTE:

MAVERICK DOES NOT TYPICALLY PROVIDE A JOINT LAYOUT PLAN WITH CONCRETE DESIGN. THE CONTRACTOR WILL BE REQUIRED TO PROVIDE THEIR OWN JOINT LAYOUT PLAN. MAVERICK CAN PROVIDE THIS SERVICE TO THE CONTRACTOR AT AN ADDITIONAL EXPENSE. PLEASE CONTACT MAVERICK FOR MORE INFORMATION ON THIS ADDITIONAL DESIGN SERVICE.

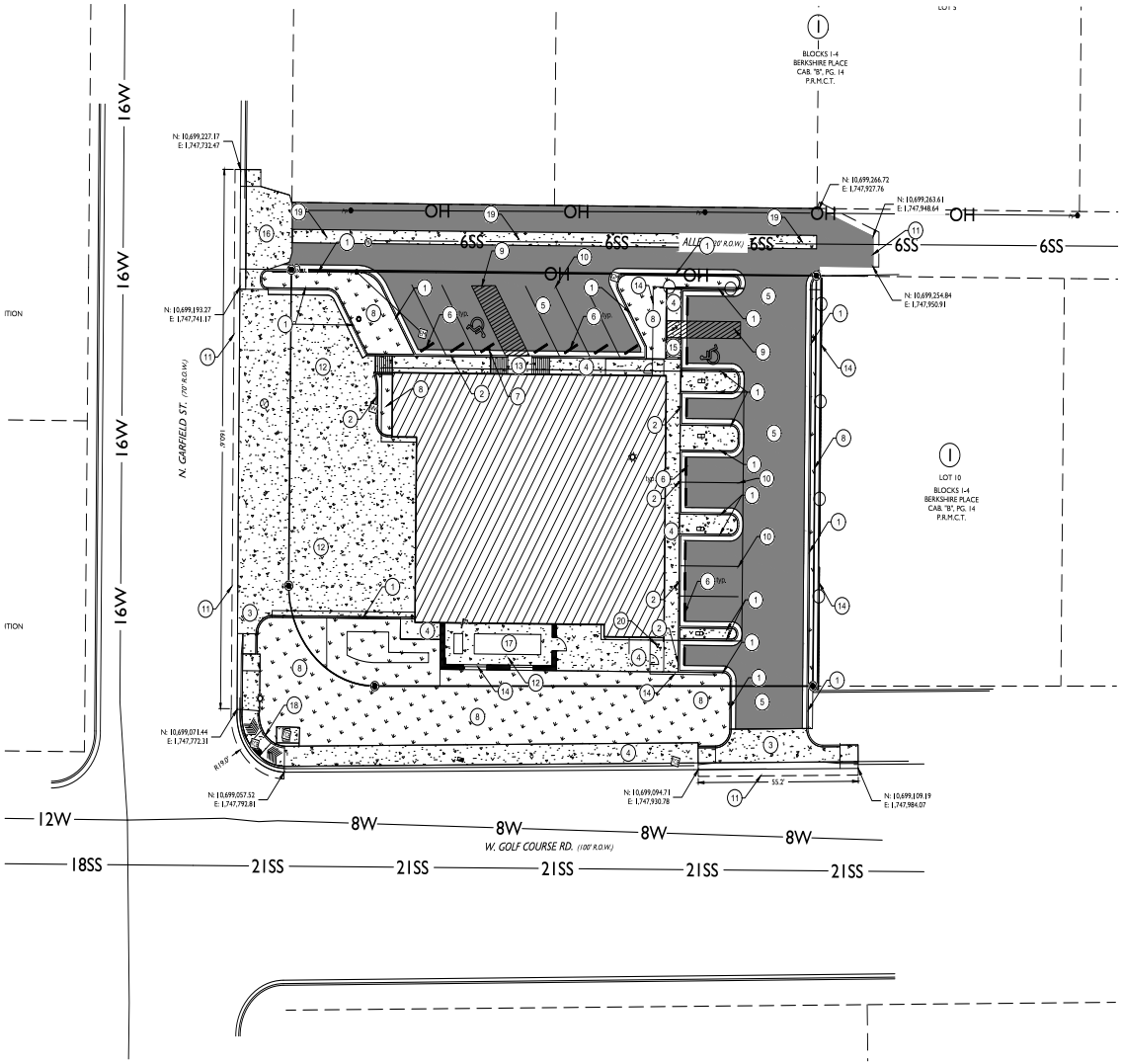

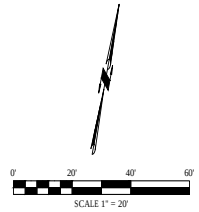

LEGEND

- DENOTES FOUND MONUMENT AS NOTED
- DENOTES SET 1/2" IRON ROD W/PLASTIC CAP MARKED "CTLS"
- DENOTES TEMPORARY BENCHMARK
- DENOTES EXISTING FIRE HYDRANT
- DENOTES EXISTING WATER VALVE
- DENOTES EXISTING WATER METER
- DENOTES EXISTING ELECTRIC METER
- DENOTES EXISTING TRAFFIC CONTROL BOX
- DENOTES EXISTING LIGHT POLE
- DENOTES EXISTING LIGHT POLE
- DENOTES EXISTING FLAG
- DENOTES EXISTING MANHOLE
- DENOTES EXISTING GUY ANCHOR
- DENOTES EXISTING POWER POLE
- 2850 — DENOTES EXISTING CONTOUR
- DENOTES BOUNDARY LINE
- DENOTES SURROUNDING PROPERTY
- DENOTES EXISTING FLOODWAY
- DENOTES EDGE OF ASPHALT
- OH — DENOTES EXISTING OVERHEAD ELECTRIC LINE
- DENOTES EXISTING FENCE
- 6SS — DENOTES EXISTING 6" SEWER LINE
- 8W — DENOTES EXISTING 8" WATER LINE
- 12W — DENOTES EXISTING 12" WATER LINE
- 16W — DENOTES EXISTING 16" WATER LINE
- 18SS — DENOTES EXISTING 6" SEWER LINE
- 21SS — DENOTES EXISTING 6" SEWER LINE
- DENOTES MEDIUM DUTY ASPHALT/CONCRETE
- DENOTES HEAVY DUTY ASPHALT/CONCRETE

PAVING NOTES:

TYP. (1) CONSTRUCT STANDARD (RAISED LIP) TYPE "A" CURB PER DETAIL 205 OF THE CITY OF MIDLAND'S STANDARD CONSTRUCTION DETAILS, INCLUDED ON SHEET C220.

2. CONSTRUCT STANDARD (INVERT) TYPE "C" CURB PER DETAIL 207 OF THE CITY OF MIDLAND'S STANDARD CONSTRUCTION DETAILS, INCLUDED ON SHEET C220.
3. CONSTRUCT STANDARD MULTI-FAMILY & COMMERCIAL DRIVEWAY PER THE CITY OF MIDLAND'S STANDARD CONSTRUCTION DETAILS 221(A&B), INCLUDED ON SHEET C221.
4. CONSTRUCT FIBERMESH REINFORCED SIDEWALK PER DETAIL 225 ON SHEET C220. WIDTH PER DIMENSIONAL.
5. INSTALL MEDIUM DUTY CONCRETE OR MEDIUM DUTY ASPHALT PAVEMENT PER OWNER DIRECTION, SEE DETAILS 05-OR 01 ON SHEET C231.
6. INSTALL PRECAST CONCRETE WHEEL STOPS PER DETAIL 03 ON SHEET C221.
7. INSTALL ADA PARKING SPOT SIGN AND INDICATOR PER DETAIL 02 ON SHEET C221. HANDICAP PARKING SPOT INDICATOR TO BE MARKED AS SHOWN. MARKING IS TO BE (SHERWIN WILLIAMS PROMAR ALKYD FAST DRY ZONE MARKING PAINT, TXDOT DMS-8220 THERMOPLASTIC MATERIAL (100 MM)) OR APPROVED EQUAL.
8. LANDSCAPING. SEE LANDSCAPE PLANS.
9. AISLE / ISLAND / ACCESSIBLE ROUTE TO BE MARKED AS SHOWN. MARKINGS ARE TO BE PAINTED WITH WHITE 4" WIDE STRIPES, SPACED AT 2 FT APART DIAGONALLY ACROSS AREAS INDICATED, AND OUTLINED AROUND THE AREA WITH THE SAME. PAINT IS TO BE SHERWIN WILLIAMS PROMAR ALKYD FAST DRY ZONE MARKING PAINT OR APPROVED EQUAL. CONTRACTOR IS TO ENSURE SURFACE IS CLEAN AND DRY PRIOR TO PAINT APPLICATION. PAINT IS TO BE APPLIED IN TWO COATS, SPRAYED IN OPPOSITE DIRECTIONS.
10. PARKING LOT STRIPING TO BE MARKED AS SHOWN. EACH PARKING STRIPE IS TO BE MARKED WITH A WHITE 4" WIDE STRIPE USING SHERWIN WILLIAMS PROMAR ALKYD FAST DRY ZONE MARKING PAINT OR APPROVED EQUAL. CONTRACTOR IS TO ENSURE SURFACE IS CLEAN AND DRY PRIOR TO PAINT APPLICATION. WIDTH AND LENGTH OF SPACES AND AISLES PER SITE DIMENSIONS SHOWN. PAINT IS TO BE APPLIED IN TWO COATS, SPRAYED IN OPPOSITE DIRECTIONS.
11. CONTRACTOR TO SAWCUT AND REMOVE TWO (2) FEET MINIMUM ASPHALT FROM EXISTING CURB AND GUTTER LIP. THE EXISTING ASPHALT PAVEMENT REPLACED IS TO MATCH CURRENT SECTION OF EXISTING ROADWAY. CONTRACTOR IS TO CLEANLY TIE INTO EXISTING CURB. DETERMINATION OF EXACT LOCATION MAY NEED TO BE FIELD VERIFIED BY CONTRACTOR. CONTRACTOR TO NOTIFY ENGINEER OF RECORD OF ANY DAMAGE OR TIE IN PROBLEMS.
12. INSTALL HEAVY DUTY CONCRETE PAVEMENT, SEE DETAIL 08 ON SHEET C221.
13. INSTALL PARALLEL CURB RAMP PER DETAIL 230 AND 233 ON SHEET C220.
14. INSTALL FENCING SEE ARCHITECTS PLANS FOR DETAILS.
15. INSTALL PERPENDICULAR CURB RAMP PER DETAIL 231 AND 233 ON SHEET C220.
16. CONSTRUCT STANDARD ALLEY APPROACH PER DETAILS 219(A) & 219(B) OF THE CITY OF MIDLAND'S STANDARD CONSTRUCTION DETAILS, INCLUDED ON SHEET C220.
17. INSTALL FIRE STATION EQUIPMENT. SEE ARCHITECTS PLANS FOR DETAILS.
18. INSTALL DIAGONAL COMBINATION CURB RAMP PER DETAIL 229 ON SHEET C220.
19. CONSTRUCT STANDARD ALLEY PER DETAIL 204 OF THE CITY OF MIDLAND'S STANDARD CONSTRUCTION DETAILS, INCLUDED ON SHEET C221.
20. COMMUNICATION TOWER, SEE ARCHITECTS PLANS FOR DETAILS.

CAUTION:

UNDERGROUND TRAFFIC SIGNAL FACILITIES EXIST IN THIS AREA. CONTACT 811 OR THE CITY OF MIDLAND SIGNAL SHOP AT 432-685-7928 FOR MARK OUT AT LEAST TWO WORKING DAYS PRIOR TO EXCAVATING.

Know what's below.
Call before you dig.

MAVERICK ENGINEERING
1909 West Wall Street, Suite "K"
Midland, Texas 79701
Tel: (432) 262-0993 Fax: (432) 262-0989
www.Maverick-Engr.com
FIRM: F-15089

BY	APPR.	DATE

REVISIONS

DRAWN BY:	CLB
CHECKED BY:	ALM
APPROVED BY:	ALM
DATE:	05.07.2019
JOB:	180217

PAVING PLAN

FIRE STATION 5
LOT 08, BLOCK 01, BERKSHIRE PLACE ADDITION, SECTION 22
AN ADDITION TO THE CITY OF MIDLAND,
MIDLAND COUNTY, TEXAS.

PRELIMINARY REVIEW:

THESE PLANS ARE RELEASED UNDER THE SEAL OF ANDREW L. MILLIN, P.E. #108172 AND MAVERICK ENGINEERING (FIRM # F-15089) ON THIS DAY 05/07/2019, FOR THE PURPOSES OF INTERIM/PRELIMINARY REVIEW. THEY SHALL NOT BE USED FOR THE PURPOSES OF CONSTRUCTION.

SHEET C210 OF 19

F:\2018\180217-MARTINEZ ARCHITECTS-FIRE STATION 5 CONS\DRAWINGS\CIVIL CONSTRUCTION PLANS\180217 C210 PAVING PLAN.DWG

© COPYRIGHT 2018 ALL RIGHTS RESERVED

4.1224

4.1225

© COPYRIGHT 2018 ALL RIGHTS RESERVED

F:\2018\180217-MARTINEZ ARCHITECTS-FIRE STATION 5 CIVILS\DRAWINGS\CIVIL CONSTRUCTION PLANS\180217 C220 PAVING DETAILS.DWG

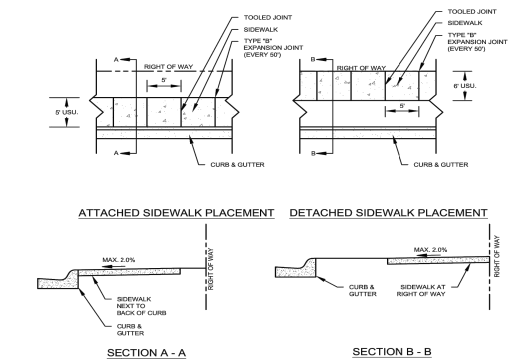

NOTES:

1. CONCRETE TO BE CITY OF MIDLAND CLASS "A" AND HAVE A MINIMUM 28 DAY COMPRESSION STRENGTH OF 3000 PSI. USE FIBER REINFORCED CONCRETE PAVEMENT THROUGHOUT.
2. SIDEWALK TO BE A MINIMUM OF 5' WIDE AND 4" THICK.
3. SIDEWALKS TO HAVE TYPE A SAWCUT JOINTS OR TOOLED JOINTS EVERY 5'.
4. TYPE "B" EXPANSION JOINTS TO BE LOCATED AT ALL PEDESTRIAN ACCESS RAMPS AND WHEREVER NEW SIDEWALK IS PLACED ADJACENT TO EXISTING CONCRETE.
5. ATTACHED SIDEWALK WILL BE LOCATED ADJACENT TO THE BACK OF CURB.
6. DETACHED SIDEWALK WILL BE LOCATED ADJACENT TO THE RIGHT-OF-WAY.
7. SIDEWALK CROSS-SLOPE MAY NOT EXCEED 2.0%.
8. ALL EXPOSED SIDEWALK EDGES TO HAVE A 1/2" RADIUS.
9. WHERE OBSTRUCTION IN SIDEWALK EXIST, THERE SHALL BE A 3' MINIMUM CLEARANCE. SIDEWALK LOCATION MAY BE SHIFTED WITH THE APPROVAL OF THE CITY ENGINEER.
10. ALL SIDEWALKS WITH A CONCRETE SURFACE SHALL HAVE A COURSE BROOM FINISH OR OTHER ROUGH NON-SKID TYPE FINISH AS APPROVED BY THE CITY ENGINEER.
11. MATERIALS AND CONSTRUCTION METHODS TO CONFORM TO THE CITY OF MIDLAND STANDARDS AND SPECIFICATIONS.
12. CONSTRUCT AS SHOWN UNLESS OTHERWISE APPROVED IN WRITING BY THE CITY ENGINEER.
13. SIDEWALKS IN DOWNTOWN PER CENTRAL BUSINESS DISTRICT POLICY.

MIDLAND Engineering Services | DRAWN: DPM | CHECKED: JCF | APPROVED: MCC | EFFECTIVE DATE: 10/01/2018 | SCALE: NTS | DETAIL: 225

STANDARD SIDEWALK

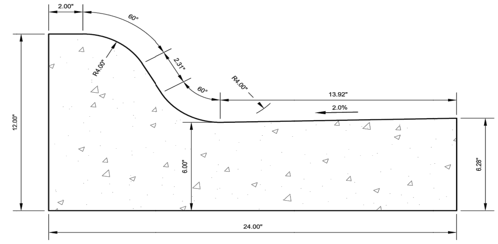

NOTES:

1. CONCRETE TO BE CITY OF MIDLAND CLASS "C", 3600 PSI. USE FIBER REINFORCED CONCRETE PAVEMENT THROUGHOUT.
2. SEAL CONCRETE JOINT AT FACE OF CURB WHEN ADJACENT TO CONCRETE PAVEMENT AND NOT INTEGRAL WITH THAT PAVEMENT.
3. MATERIALS AND CONSTRUCTION METHODS TO CONFORM TO CITY OF MIDLAND STANDARDS AND SPECIFICATIONS.
4. CONSTRUCT AS SHOWN UNLESS OTHERWISE APPROVED IN WRITING BY THE CITY ENGINEER.

MIDLAND Engineering Services | DRAWN: DPM | CHECKED: JCF | APPROVED: MCC | EFFECTIVE DATE: 10/01/2018 | SCALE: NTS | DETAIL: 205

TYPE A STANDARD CURB AND GUTTER

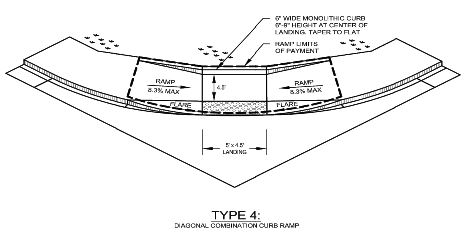

TYPE 4:
DIAGONAL COMBINATION CURB RAMP

CURB RAMP NOTES:

1. ADJUST CURB RAMP LOCATION AND OR TYPE SO THAT NO OBSTRUCTION IS LOCATED WITHIN THE LANDING AREA.
2. ALL SLOPES ARE MAXIMUM ALLOWABLE. THE LEAST POSSIBLE SLOPE THAT WILL STILL DRAIN PROPERLY SHOULD BE USED.
3. LANDINGS SHALL BE 5'X 5' MINIMUM WITH A MAXIMUM 2% SLOPE IN ANY DIRECTION. WHERE OBSTRUCTIONS EXIST, THERE SHALL BE A 3' MINIMUM CLEARANCE IN WIDTH AND LENGTH OF THE LANDING.
4. MANEUVERING SPACE AT THE BOTTOM OF CURB RAMPS SHALL BE A MINIMUM OF 4'X4' WHOLLY CONTAINED WITHIN THE CROSSWALK AND TO THE ENTIRE OUTSIDE OF THE PARALLEL VEHICULAR TRAVEL PATH.
5. MAXIMUM ALLOWABLE CROSS SLOPE ON SIDEWALK AND CURB RAMP SURFACES IS 2%.
6. CURB RAMPS WITH RETURNED CURBS MAY BE USED ONLY WHERE PEDESTRIANS WOULD NOT NORMALLY WALK ACROSS THE RAMP, EITHER BECAUSE THE ADJACENT SURFACE IS PLANTING OR OTHER NON-WALKING SURFACE OR BECAUSE THE SIDE APPROACH IS SUBSTANTIALLY OBSTRUCTED. OTHERWISE, PROVIDE FLARED SIDES.
7. ADDITIONAL INFORMATION ON CURB RAMP LOCATION, DESIGN, LIGHT REFLECTIVE VALUE AND TEXTURE MAY BE FOUND IN THE CURRENT EDITION OF THE TEXAS ACCESSIBILITY STANDARDS (TAS) AND 16 TAC 68.102.
8. AT INTERSECTIONS WHERE CROSSWALK MARKINGS ARE NOT REQUIRED, CURB RAMPS SHALL BE ALIGNED WITH THEORETICAL CROSSWALKS,OR AS DIRECTED BY THE ENGINEER.
9. PROVIDE A SMOOTH TRANSITION WHERE THE CURB RAMPS CONNECT TO THE STREET.
10. FLARE SLOPE SHALL NOT EXCEED 10% MEASURED ALONG CURB LINE.
11. ALL RAMPS AND LANDINGS WITH A CONCRETE SURFACE SHALL HAVE A COURSE BROOM FINISH OR OTHER ROUGH NON-SKID TYPE FINISH AS APPROVED BY THE ENGINEER.
12. PLACE 6" OF CONCRETE IN RAMPS, LANDINGS, AND FLARES THAT ARE LOCATED AT THE RETURNS ADJACENT TO THE BACK OF CURB OF ARTERIAL STREETS AND COMMERCIAL SITES.

GENERAL NOTES:

1. CONCRETE TO BE CITY OF MIDLAND CLASS "A" WITH A MINIMUM 28 DAY COMPRESSION STRENGTH OF 3000 PSI. USE FIBER REINFORCED CONCRETE THROUGHOUT.
2. MATERIALS AND CONSTRUCTION METHODS TO CONFORM TO THE CITY OF MIDLAND STANDARDS AND SPECIFICATIONS UNLESS OTHERWISE DIRECTED BY ADA STANDARDS AND RESOURCES.

MIDLAND Engineering Services | DRAWN: DPM | CHECKED: JCF | APPROVED: MCC | EFFECTIVE DATE: 10/01/2018 | SCALE: NTS | DETAIL: 229

DIAGONAL COMBINATION CURB RAMP

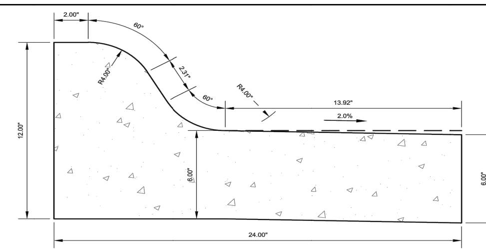

NOTES:

1. CONCRETE WILL BE THE CITY OF MIDLAND CLASS "C", 3600 PSI. USE FIBER REINFORCED CONCRETE PAVEMENT THROUGHOUT.
2. SEAL CONCRETE JOINT AT FACE OF CURB WHEN ADJACENT TO CONCRETE PAVEMENT AND NOT INTEGRAL WITH THAT PAVEMENT.
3. MATERIALS AND CONSTRUCTION METHODS TO CONFORM TO CITY OF MIDLAND STANDARDS AND SPECIFICATIONS.
4. CONSTRUCT AS SHOWN UNLESS OTHERWISE APPROVED IN WRITING BY THE CITY ENGINEER.

MIDLAND Engineering Services | DRAWN: DPM | CHECKED: JCF | APPROVED: MCC | EFFECTIVE DATE: 10/01/2018 | SCALE: NTS | DETAIL: 207

TYPE C INVERT CURB AND GUTTER

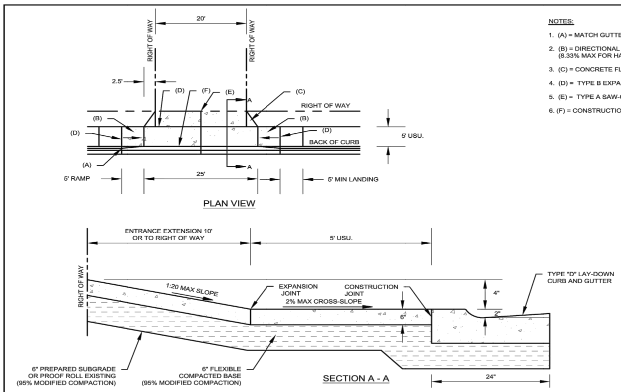

NOTES:

1. (A) = MATCH GUTTER
2. (B) = DIRECTIONAL CURB RAMP DETAIL 231 (8.33% MAX FOR HANDICAP RAMP)
3. (C) = CONCRETE FLARE
4. (D) = TYPE B EXPANSION JOINT
5. (E) = TYPE A SAW-CUT JOINT
6. (F) = CONSTRUCTION JOINT (COLD JOINT)

MIDLAND Engineering Services | DRAWN: DPM | CHECKED: JCF | APPROVED: MCC | EFFECTIVE DATE: 10/01/2018 | SCALE: NTS | DETAIL: 219(A)

STANDARD ALLEY APPROACH

DETECTABLE WARNING SURFACE NOTES:

1. DETECTABLE WARNING SURFACE SUCH AS ARMOR-TILE ADA SOUND AMPLIFYING DETECTABLE/TACTILE WARNING SURFACE TILE OR EQUAL AND APPROVED BY THE ENGINEER AS MEETING ALL REQUIREMENTS OF ASTM C-936, C-33.
2. CURB RAMPS MUST CONTAIN A DETECTABLE WARNING SURFACE THAT CONSISTS OF RAISED TRUNCATED DOMES COMPLYING WITH SECTION 7.05 DETACHABLE WARNINGS OF THE TEXAS ACCESSIBILITY STANDARDS (TAS). THE SURFACE MUST CONTRAST VISUALLY WITH ADJOINING SURFACES, INCLUDING SIDE FLARES. FURNISH DARK BROWN OR DARK RED DETECTABLE WARNING SURFACE ADJACENT TO UNCOLORED CONCRETE,UNLESS SPECIFIED ELSEWHERE IN THE PLANS.
3. DETECTABLE WARNING SURFACES MUST BE SLIP RESISTANT AND NOT ALLOW WATER TO ACCUMULATE.
4. ALIGN TRUNCATED DOMES IN THE DIRECTION OF PEDESTRIAN TRAVEL WHEN ENTERING THE STREET.
5. SHADED AREAS INDICATE THE APPROXIMATE LOCATION FOR THE DETECTABLE WARNING SURFACE FOR EACH CURB RAMP TYPE.
6. DETECTABLE WARNING SURFACES SHALL BE A MINIMUM OF 24" IN DEPTH IN THE DIRECTION OF PEDESTRIAN TRAVEL.
7. DETECTABLE WARNING SURFACES SHALL BE LOCATED SO THAT THE EDGE NEAREST THE CURB LINE IS A MINIMUM OF 6" AND A MAXIMUM OF 10" FROM THE EXTENSION OF THE FACE OF CURB. DETECTABLE WARNING SURFACES MAY BE CURVED ALONG THE CORNER RADIUS.
8. SINGLE TILE PLATES COLONIAL RED COLOR.

GENERAL NOTES:

1. CONCRETE TO BE CITY OF MIDLAND CLASS "A" WITH A MINIMUM 28 DAY COMPRESSION STRENGTH OF 3000 PSI. USE FIBER REINFORCED CONCRETE THROUGHOUT.
2. MATERIALS AND CONSTRUCTION METHODS TO CONFORM TO THE CITY OF MIDLAND STANDARDS AND SPECIFICATIONS UNLESS OTHERWISE DIRECTED BY ADA STANDARDS AND RESOURCES.

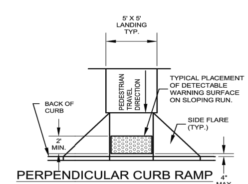

PERPENDICULAR CURB RAMP

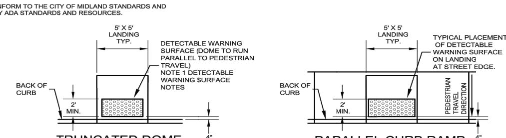

TRUNCATED DOME PATTERN

PARALLEL CURB RAMP

MIDLAND Engineering Services | DRAWN: DPM | CHECKED: JCF | APPROVED: MCC | EFFECTIVE DATE: 10/01/2018 | SCALE: NTS | DETAIL: 233

DETECTABLE WARNING SURFACE

NOTES:

1. REMOVE AND REPLACE EXISTING CURB AND GUTTER TO NEAREST JOINT IF LESS THAN 4' SECTION OF EXISTING CURB AND GUTTER REMAINS AFTER ALLEY APPROACH IS PLACED.
2. MATCH GUTTER/FLOWLINE ELEVATION ON EACH END OF ALLEY APPROACH. WATER MUST FLOW IN GUTTER ACROSS THE ALLEY APPROACH.
3. CONCRETE TO BE CITY OF MIDLAND CLASS "C", 3600 PSI. USE FIBER REINFORCED CONCRETE PAVEMENT THROUGHOUT.
4. 2" INVERT REQUIRED AT ALLEY APPROACH CENTER LINE WHEN ALLEY DRAINS TOWARDS STREET. IF ALLEY DRAINS AWAY FROM STREET THEN BACK OF APPROACH IS FLAT.
5. OVER-EXCAVATION BELOW THE GRADE REQUIRED TO BE CORRECTED BY PLACING EXTRA CONCRETE AT THE TIME THE ENTRANCE IS PLACED OR BY PLACING ADDITIONAL CITY STANDARD FLEXIBLE COMPACTED BASE.
6. FLEXIBLE COMPACTED BASE TO BE PLACED IN LIFTS NO THICKER THAN 6".
7. SIDEWALKS AND RAMPS TO HAVE COARSE BROOM FINISH.
8. SEAL ALL CONCRETE JOINTS.
9. MATERIALS AND CONSTRUCTION METHODS TO CONFORM TO THE CITY OF MIDLAND STANDARDS AND SPECIFICATIONS.
10. CONSTRUCT AS SHOWN UNLESS OTHERWISE APPROVED IN WRITING BY THE CITY ENGINEER.

MIDLAND Engineering Services | DRAWN: DPM | CHECKED: JCF | APPROVED: MCC | EFFECTIVE DATE: 10/01/2018 | SCALE: NTS | DETAIL: 219(B)

STANDARD ALLEY APPROACH

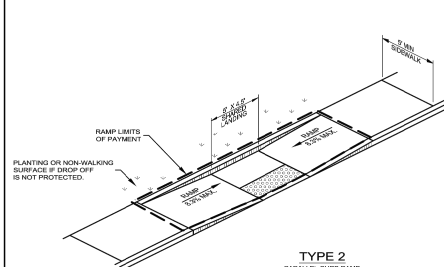

TYPE 2
PARALLEL CURB RAMP

CURB RAMP NOTES:

1. ADJUST CURB RAMP LOCATION AND OR TYPE SO THAT NO OBSTRUCTION IS LOCATED WITHIN THE LANDING AREA.
2. ALL SLOPES ARE MAXIMUM ALLOWABLE. THE LEAST POSSIBLE SLOPE THAT WILL STILL DRAIN PROPERLY SHOULD BE USED.
3. LANDINGS SHALL BE 5'X 5' MINIMUM WITH A MAXIMUM 2% SLOPE IN ANY DIRECTION. WHERE OBSTRUCTIONS EXIST, THERE SHALL BE A 3' MINIMUM CLEARANCE IN WIDTH AND LENGTH OF THE LANDING.
4. MANEUVERING SPACE AT THE BOTTOM OF CURB RAMPS SHALL BE A MINIMUM OF 4'X4' WHOLLY CONTAINED WITHIN THE CROSSWALK AND TO THE ENTIRE OUTSIDE OF THE PARALLEL VEHICULAR TRAVEL PATH.
5. MAXIMUM ALLOWABLE CROSS SLOPE ON SIDEWALK AND CURB RAMP SURFACES IS 2%.
6. CURB RAMPS WITH RETURNED CURBS MAY BE USED ONLY WHERE PEDESTRIANS WOULD NOT NORMALLY WALK ACROSS THE RAMP, EITHER BECAUSE THE ADJACENT SURFACE IS PLANTING OR OTHER NON-WALKING SURFACE OR BECAUSE THE SIDE APPROACH IS SUBSTANTIALLY OBSTRUCTED. OTHERWISE, PROVIDE FLARED SIDES.
7. ADDITIONAL INFORMATION ON CURB RAMP LOCATION, DESIGN, LIGHT REFLECTIVE VALUE AND TEXTURE MAY BE FOUND IN THE CURRENT EDITION OF THE TEXAS ACCESSIBILITY STANDARDS (TAS) AND 16 TAC 68.102.
8. AT INTERSECTIONS WHERE CROSSWALK MARKINGS ARE NOT REQUIRED, CURB RAMPS SHALL BE ALIGNED WITH THEORETICAL CROSSWALKS,OR AS DIRECTED BY THE ENGINEER.
9. PROVIDE A SMOOTH TRANSITION WHERE THE CURB RAMPS CONNECT TO THE STREET.
10. FLARE SLOPE SHALL NOT EXCEED 10% MEASURED ALONG CURB LINE.
11. ALL RAMPS AND LANDINGS WITH A CONCRETE SURFACE SHALL HAVE A COURSE BROOM FINISH OR OTHER ROUGH NON-SKID TYPE FINISH AS APPROVED BY THE ENGINEER.
12. PLACE 6" OF CONCRETE IN RAMPS, LANDINGS, AND FLARES THAT ARE LOCATED AT THE RETURNS ADJACENT TO THE BACK OF CURB OF ARTERIAL STREETS AND COMMERCIAL SITES.

GENERAL NOTES:

1. CONCRETE TO BE CITY OF MIDLAND CLASS "A" WITH A MINIMUM 28 DAY COMPRESSION STRENGTH OF 3000 PSI. USE FIBER REINFORCED CONCRETE THROUGHOUT.
2. MATERIALS AND CONSTRUCTION METHODS TO CONFORM TO THE CITY OF MIDLAND STANDARDS AND SPECIFICATIONS UNLESS OTHERWISE DIRECTED BY ADA STANDARDS AND RESOURCES.

MIDLAND Engineering Services | DRAWN: DPM | CHECKED: JCF | APPROVED: MCC | EFFECTIVE DATE: 10/01/2018 | SCALE: NTS | DETAIL: 230

PARALLEL CURB RAMP

SHEET C220 OF 19

PRELIMINARY REVIEW:
THESE PLANS ARE RELEASED UNDER THE SEAL OF ANDREW L. MELLEN, P.E. #106572 AND MAVERICK ENGINEERING (FIRM # F-15089) ON THIS DAY 05/07/2019, FOR THE PURPOSES OF INTERIM/PRELIMINARY REVIEW. THEY SHALL NOT BE USED FOR THE PURPOSES OF CONSTRUCTION.

PAVING DETAILS

FIRE STATION 5

LOT 08, BLOCK 01, BERKSHIRE PLACE ADDITION, SECTION 22
AN ADDITION TO THE CITY OF MIDLAND,
MIDLAND COUNTY, TEXAS.

DRAWN BY: CLB
CHECKED BY: ALM
APPROVED BY: ALM
DATE: 05/07/2019
JOB: 180217

Δ	REVISIONS	BY	APPR.	DATE

MAVERICK ENGINEERING
1909 West Wall Street, Suite "K"
Midland, Texas 79701 FIRM: F-15089
Tel: (432) 262-0999 Fax: (432) 262-0989
www.Maverick-Eng.com

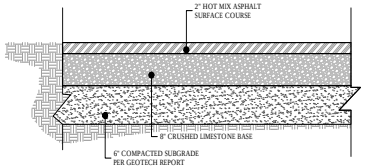

NOTES:

- INSTALL TXDOT TYPE "D" HOT MIX ASPHALTIC CONCRETE (a_c = 0.44). ASPHALT SHALL BE COMPACTED TO AT LEAST 93% OF THE RICE SPECIFIC GRAVITY.
- CRUSHED LIMESTONE BASE TO BE TX-DOT TYPE "A", GRADE 1 OR 2, COMPACTED TO AT LEAST 97% STANDARD PROCTOR DENSITY.
- SUBGRADE COMPACTED TO GEOTECH REPORT

1 ASPHALT PAVEMENT - MEDIUM DUTY
N.T.S.

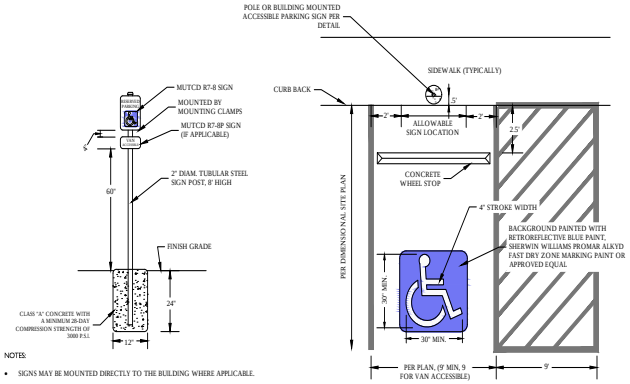

NOTES:

- SIGNS MAY BE MOUNTED DIRECTLY TO THE BUILDING WHERE APPLICABLE.

2 ACCESSIBLE SPACE MARKING
N.T.S.

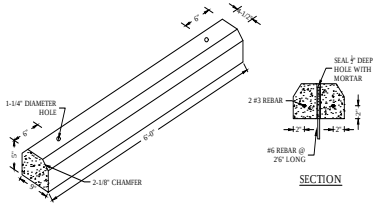

NOTES:

- 3,600 COMPRESSIVE STRENGTH @ 28 DAYS, REINFORCED WITH #3 BARS @ 16" ON CENTER.

3 CONCRETE WHEEL STOP
N.T.S.

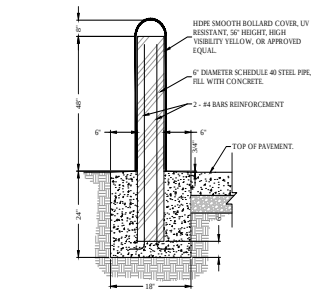

NOTES:

- CONCRETE IS TO BE 3,600 PSI COMPRESSIVE STRENGTH @ 28 DAYS, INCLUDING PIPE FILL MATERIAL.
- REINFORCEMENT IS TO BE GRADE 60 STEEL OR BETTER.

4 STANDARD BOLLARD DETAIL
N.T.S.

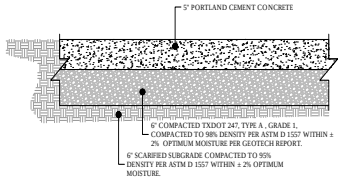

NOTES:

- 3,600 COMPRESSIVE STRENGTH @ 28 DAYS, REINFORCED WITH #3 BARS @ 16" ON CENTER.
- THE MAXIMUM CONTROL JOINT SPACING SHOULD BE HELD AT A RANGE FROM 24 TO 36 TIMES THE SLAB THICKNESS, WITH A MAXIMUM LENGTH TO WIDTH RATIO OF 1.5.

5 CONCRETE PAVEMENT - MEDIUM DUTY
N.T.S.

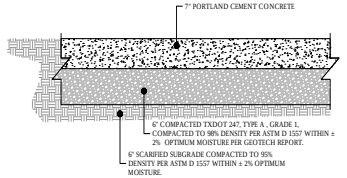

NOTES:

- 3,600 COMPRESSIVE STRENGTH @ 28 DAYS, REINFORCED WITH #3 BARS @ 16" ON CENTER.
- THE MAXIMUM CONTROL JOINT SPACING SHOULD BE HELD AT A RANGE FROM 24 TO 36 TIMES THE SLAB THICKNESS, WITH A MAXIMUM LENGTH TO WIDTH RATIO OF 1.5.

6 CONCRETE PAVEMENT - HEAVY DUTY
N.T.S.

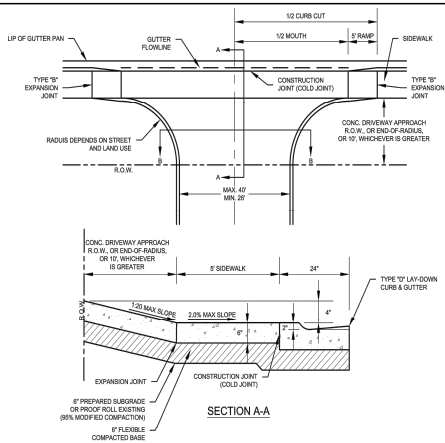

SECTION A-A

NOTES:

1. REMOVE AND REPLACE EXISTING CURB AND GUTTER TO NEAREST JOINT IF LESS THAN 4' SECTION OF EXISTING CURB AND GUTTER REMAINS AFTER DRIVEWAY APPROACH PLACED.
2. LANDING MAY BE CLOSER THAN 5' FROM PROPERTY LINE WITH ADJOINING PROPERTY OWNER'S CONSENT. CONSENT FORMS ARE AVAILABLE IN ENGINEERING SERVICES. APPROVAL FROM ADJOINING PROPERTY OWNER DOES NOT GUARANTEE ENGINEERING SERVICES APPROVAL.
3. THIS DETAIL ONLY APPLIES WHEN ADJACENT PROPERTY IS NOT AN ALLEY. A MINIMUM 10' IS REQUIRED BETWEEN DRIVEWAY CURB OPENING AND ALLEY PAVING.
4. MATCH GUTTER/ FLOWLINE ELEVATION ON EACH END OF DRIVEWAY APPROACH. WATER MUST FLOW IN GUTTER ACROSS THE DRIVEWAY APPROACH.
5. THE CITY ENGINEER OR TRAFFIC ENGINEER MAY APPROVE WIDER OPENINGS FOR COMMERCIAL DRIVES TO ACCOMMODATE DIVIDED ENTRY/EXIT AND ANGLED DRIVES OR HIGH VOLUME, HIGH SPEED STREETS.
6. CONCRETE TO BE CITY OF MIDLAND CLASS "C", 3600 PSI. USE FIBER REINFORCED CONCRETE PAVEMENT THROUGHOUT.
7. CONTRACTOR, AT THEIR OPTION, MAY ELECT TO PLACE 8" CONCRETE PAVEMENT WITHOUT FLEXIBLE COMPACTED BASE RATHER THAN 6" CONCRETE PAVEMENT WITH COMPACTED FLEXIBLE BASE.
8. OVER-EXCAVATION BELOW THE GRADE REQUIRED TO BE CORRECTED BY PLACING EXTRA CONCRETE AT THE TIME THE DRIVEWAY IS PLACED OR BY PLACING ADDITIONAL CITY STANDARD FLEXIBLE COMPACTED BASE.
9. FLEXIBLE COMPACTED BASE TO BE PLACED IN LIFTS NO THICKER THAN 8".
10. SIDEWALKS AND RAMPS TO HAVE COURSE BROOM FINISH.
11. SEAL ALL CONCRETE JOINTS.
12. MATERIAL AND CONSTRUCTION METHODS TO CONFORM TO THE CITY OF MIDLAND STANDARDS AND SPECIFICATIONS.
13. CONSTRUCT AS SHOWN UNLESS OTHERWISE APPROVED IN WRITING BY THE CITY ENGINEER.

DRAWN: DPM	EFFECTIVE DATE: 10/01/2018	SCALE: NTS	DETAIL:
CHECKED: JCF	MULTI-FAMILY & COMMERCIAL DRIVEWAY		221(A)
APPROVED: MCC			

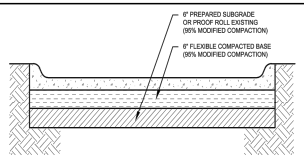

SECTION B-B

NOTES:

1. REMOVE AND REPLACE EXISTING CURB AND GUTTER TO NEAREST JOINT IF LESS THAN 4' SECTION OF EXISTING CURB AND GUTTER REMAINS AFTER DRIVEWAY APPROACH PLACED.
2. LANDING MAY BE CLOSER THAN 5' FROM PROPERTY LINE WITH ADJOINING PROPERTY OWNER'S CONSENT. CONSENT FORMS ARE AVAILABLE IN ENGINEERING SERVICES. APPROVAL FROM ADJOINING PROPERTY OWNER DOES NOT GUARANTEE ENGINEERING SERVICES APPROVAL.
3. THIS DETAIL ONLY APPLIES WHEN ADJACENT PROPERTY IS NOT AN ALLEY. A MINIMUM 10' IS REQUIRED BETWEEN DRIVEWAY CURB OPENING AND ALLEY PAVING.
4. MATCH GUTTER/ FLOWLINE ELEVATION ON EACH END OF DRIVEWAY APPROACH. WATER MUST FLOW IN GUTTER ACROSS THE DRIVEWAY APPROACH.
5. THE CITY ENGINEER OR TRAFFIC ENGINEER MAY APPROVE WIDER OPENINGS FOR COMMERCIAL DRIVES TO ACCOMMODATE DIVIDED ENTRY/EXIT AND ANGLED DRIVES OR HIGH VOLUME, HIGH SPEED STREETS.
6. CONCRETE TO BE CITY OF MIDLAND CLASS "C", 3600 PSI. USE FIBER REINFORCED CONCRETE PAVEMENT THROUGHOUT.
7. CONTRACTOR, AT THEIR OPTION, MAY ELECT TO PLACE 8" CONCRETE PAVEMENT WITHOUT FLEXIBLE COMPACTED BASE RATHER THAN 6" CONCRETE PAVEMENT WITH COMPACTED FLEXIBLE BASE.
8. OVER-EXCAVATION BELOW THE GRADE REQUIRED TO BE CORRECTED BY PLACING EXTRA CONCRETE AT THE TIME THE DRIVEWAY IS PLACED OR BY PLACING ADDITIONAL CITY STANDARD FLEXIBLE COMPACTED BASE.
9. FLEXIBLE COMPACTED BASE TO BE PLACED IN LIFTS NO THICKER THAN 8".
10. SIDEWALKS AND RAMPS TO HAVE COURSE BROOM FINISH.
11. SEAL ALL CONCRETE JOINTS.
12. MATERIAL AND CONSTRUCTION METHODS TO CONFORM TO THE CITY OF MIDLAND STANDARDS AND SPECIFICATIONS.
13. CONSTRUCT AS SHOWN UNLESS OTHERWISE APPROVED IN WRITING BY THE CITY ENGINEER.

DRAWN: DPM	EFFECTIVE DATE: 10/01/2018	SCALE: NTS	DETAIL:
CHECKED: JCF	MULTI-FAMILY & COMMERCIAL DRIVEWAY		221(B)
APPROVED: MCC			

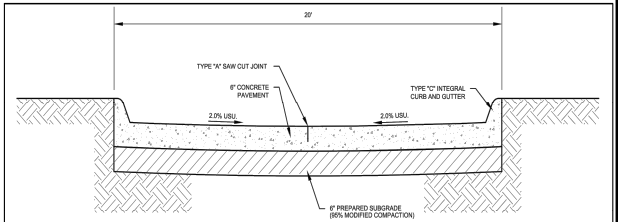

NOTES:

1. THIS DETAIL WILL BE THE STANDARD FOR ANY ALLEY ACCEPTING RUNOFF FROM A STREET, ROAD, OR DRAINAGE STRUCTURE.
2. CONCRETE TO BE CITY OF MIDLAND CLASS "C", 3600 PSI. USE FIBER REINFORCED CONCRETE PAVEMENT THROUGHOUT.
3. SAW-CUT JOINTS ARE TO BE LOCATED AT EVERY 10' SPACING ALONG THE CONCRETE PAVEMENT. SEAL ALL CONCRETE JOINTS.
4. EXPANSION JOINTS ARE TO BE LOCATED AT EVERY 200' SPACING ALONG THE CONCRETE PAVEMENT. SEAL ALL CONCRETE JOINTS.
5. FLEXIBLE COMPACTED BASE TO BE PLACED IN LIFTS NO THICKER THAN 6".
6. MATERIALS AND CONSTRUCTION METHODS TO CONFORM TO THE CITY OF MIDLAND STANDARDS AND SPECIFICATIONS.
7. CONSTRUCT AS SHOWN UNLESS OTHERWISE APPROVED IN WRITING BY THE CITY ENGINEER.

DRAWN: DPM	EFFECTIVE DATE: 10/01/2018	SCALE: NTS	DETAIL:
CHECKED: JCF	TYPICAL DRAINAGE ALLEY CROSS SECTION		204
APPROVED: MCC			

MAVERICK ENGINEERING
1909 West Wall Street, Suite "K"
Midland, Texas 79701
Tel: (432) 262-0999 Fax: (432) 262-0989
www.MaverickEngr.com
FIRM: F-15089

NO.	BY:	DATE:	REVISIONS
4			

DRAWN BY: CLB
CHECKED BY: ALM
APPROVED BY: ALM
DATE: 05/07/2019
JOB: 180217

PAVING DETAILS
FIRE STATION 5
LOT 08, BLOCK 01, BERKSHIRE PLACE ADDITION, SECTION 22
AN ADDITION TO THE CITY OF MIDLAND,
MIDLAND COUNTY, TEXAS.

PRELIMINARY REVIEW:
THESE PLANS ARE RELEASED UNDER THE SEAL OF ANDREW L. MELLEN, P.E. #108172 AND MAVERICK ENGINEERING (FIRM # F-15089) ON THIS DAY 05/07/2019, FOR THE PURPOSES OF INTERIM/PRELIMINARY REVIEW. THEY SHALL NOT BE USED FOR THE PURPOSES OF CONSTRUCTION.

SHEET C221 OF 19

F:\2018\180217-MARTINEZ, ARCHITECTS-FIRE STATION 5 CONS\DRAWINGS\CIVIL CONSTRUCTION PLANS\180217 C221 PAVING DETAILS.DWG
© COPYRIGHT 2018 ALL RIGHTS RESERVED

4.1226

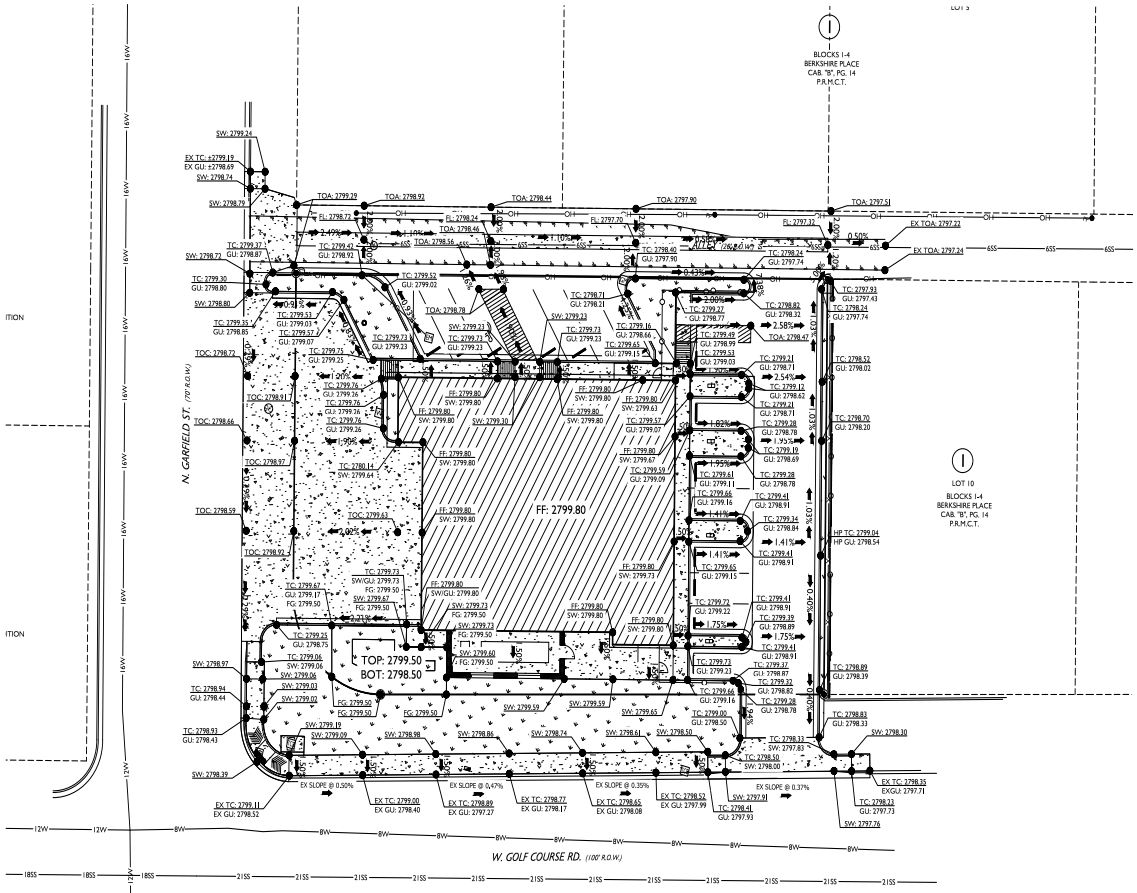

0' 30' 60' 90'

SCALE 1" = 30'

Know what's below. Call before you dig.

LEGEND

- DENOTES FOUND MONUMENT AS NOTED
- DENOTES SET 1/2" IRON ROD W/PLASTIC CAP MARKED "CTLS"
- DENOTES TEMPORARY BENCHMARK
- DENOTES EXISTING FIRE HYDRANT
- DENOTES EXISTING WATER VALVE
- DENOTES EXISTING WATER METER
- DENOTES EXISTING ELECTRIC METER
- DENOTES EXISTING TRAFFIC CONTROL BOX
- DENOTES EXISTING LIGHT POLE
- DENOTES EXISTING LIGHT POLE
- DENOTES EXISTING FLAG
- DENOTES EXISTING MANHOLE
- DENOTES EXISTING GUY ANCHOR
- DENOTES EXISTING POWER POLE
- 2850 DENOTES EXISTING CONTOUR
- DENOTES BOUNDARY LINE
- DENOTES SURROUNDING PROPERTY
- DENOTES EXISTING FLOODWAY
- DENOTES EDGE OF ASPHALT
- OH DENOTES EXISTING OVERHEAD ELECTRIC LINE
- DENOTES EXISTING FENCE
- 6SS DENOTES EXISTING 6" SEWER LINE
- 8W DENOTES EXISTING 8" WATER LINE
- 12W DENOTES EXISTING 12" WATER LINE
- 16W DENOTES EXISTING 16" WATER LINE
- 18SS DENOTES EXISTING 6" SEWER LINE
- 21SS DENOTES EXISTING 6" SEWER LINE
- FG FINISH GRADE ELEVATION
- FL FLOW LINE ELEVATION
- TC TOP OF CURB ELEVATION
- GU GUTTER ELEVATION
- EX EXISTING ELEVATION
- FF FINISH FLOOR ELEVATION
- SW SIDEWALK ELEVATION

GRADING NOTES:

- TYPICAL DROP OFF FROM FINISHED FLOOR TO TOP OF LANDSCAPE GRADE IS 3' UNLESS OTHERWISE NOTED.
- SIDEWALK / ADA PATH GRADES ARE NOT TO EXCEED 5.0% LONGITUDINALLY OR 2.0% TRANSVERSALLY.
- SLOPES SHOWN ARE TYPICALLY CALCULATED FROM THE GUTTER LIP GRADE. PLEASE NOTE THAT THIS IS DIFFERENT FROM THE ACTUAL GUTTER GRADE, WHISH IS SLIGHTLY LOWER THAN THE LIP. THE LIP IS GENERALLY 6 INCHES BELOW THE TOP OR BACK OR CURB UNLESS NOTED OTHERWISE.

CAUTION:

UNDERGROUND TRAFFIC SIGNAL FACILITIES EXIST IN THIS AREA. CONTACT 811 OR THE CITY OF MIDLAND SIGNAL SHOP AT 432-685-7928 FOR MARK OUT AT LEAST TWO WORKING DAYS PRIOR TO EXCAVATING.

MAVERICK ENGINEERING
1909 West Wall Street, Suite "K"
Midland, Texas 79701 FIRM: F-15089
Tel: (432) 262-0993 Fax: (432) 262-0989
www.Maverick-Engr.com

NO.	REVISIONS	BY	APPR.	DATE

DRAWN BY: CLB
CHECKED BY: ALM
APPROVED BY: ALM
DATE: 05/07/2019
JOB: 180217

GRADING PLAN

FIRE STATION 5

LOT 08, BLOCK 01, BERKSHIRE PLACE ADDITION, SECTION 22
AN ADDITION TO THE CITY OF MIDLAND,
MIDLAND COUNTY, TEXAS.

PRELIMINARY REVIEW:

THESE PLANS ARE RELEASED UNDER THE SEAL OF ANDREW L. MILLIN, P.E. #108572 AND MAVERICK ENGINEERING (FIRM # F-15089) ON THIS DAY 05/07/2019, FOR THE PURPOSES OF INTERIM/PRELIMINARY REVIEW. THEY SHALL NOT BE USED FOR THE PURPOSES OF CONSTRUCTION.

SHEET C230 OF 19

F:\2018\180217-MARTINEZ ARCHITECTS-FIRE STATION 5 CUMULS\DRAWINGS\CIVIL CONSTRUCTION PLANS\180217 C230 GRADING PLAN.DWG
© COPYRIGHT 2018 ALL RIGHTS RESERVED

4.1227

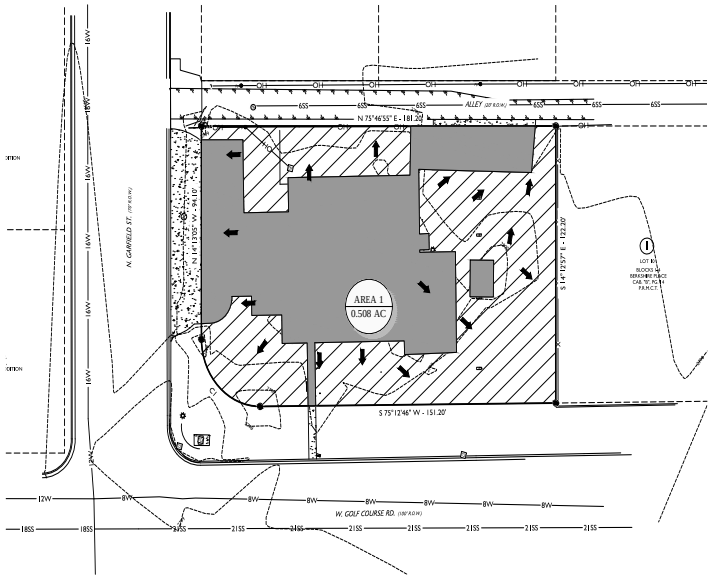

1 PRE-DEVELOPMENT CONDITIONS
N.T.S.

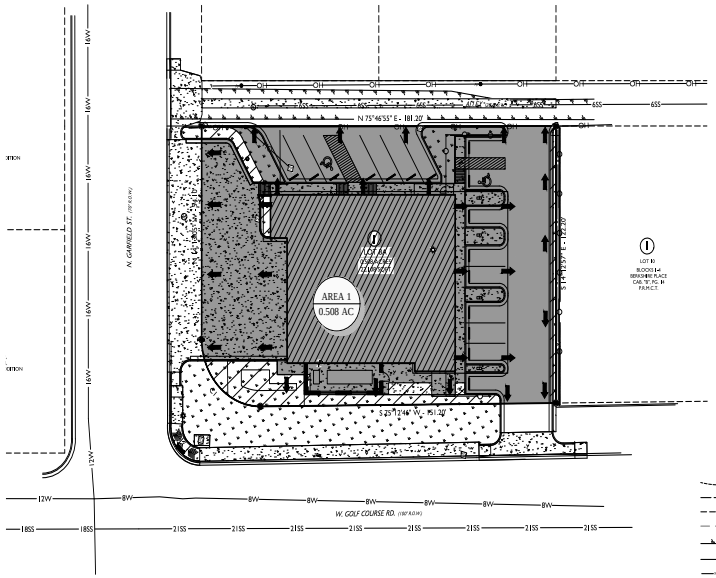

2 POST-DEVELOPMENT CONDITIONS
N.T.S.

0' 30' 60' 90'

SCALE 1" = 30'

LEGEND

- DENOTES FOUND MONUMENT AS NOTED
- DENOTES SET 1/2" IRON ROD W/PLASTIC CAP MARKED "CTLS"
- DENOTES TEMPORARY BENCHMARK
- DENOTES EXISTING FIRE HYDRANT
- DENOTES EXISTING WATER VALVE
- DENOTES EXISTING WATER METER
- DENOTES EXISTING ELECTRIC METER
- DENOTES EXISTING TRAFFIC CONTROL BOX
- DENOTES EXISTING LIGHT POLE
- DENOTES EXISTING LIGHT POLE
- DENOTES EXISTING FLAG
- DENOTES EXISTING MANHOLE
- DENOTES EXISTING GUY ANCHOR
- DENOTES EXISTING POWER POLE
- 2850 DENOTES EXISTING CONTOUR
- DENOTES BOUNDARY LINE
- DENOTES SURROUNDING PROPERTY
- DENOTES EXISTING FLOODWAY
- DENOTES EDGE OF ASPHALT
- OH DENOTES EXISTING OVERHEAD ELECTRIC LINE
- DENOTES EXISTING FENCE
- 6SS DENOTES EXISTING 6" SEWER LINE
- 8W DENOTES EXISTING 8" WATER LINE
- 12W DENOTES EXISTING 12" WATER LINE
- 16W DENOTES EXISTING 16" WATER LINE
- 18SS DENOTES EXISTING 6" SEWER LINE
- 21SS DENOTES EXISTING 6" SEWER LINE
- DENOTES WATERSHED BOUNDARY
- DENOTES DRAINAGE FLOW DIRECTION
- AREA 1 / 5.00 AC DENOTES WATERSHED ID / DENOTES WATERSHED AREA
- DENOTES IMPERVIOUS AREA
- DENOTES LANDSCAPE AREA

180217 Hydrocad *Type II 24-hr Rainfall=6.83"*
Prepared by {enter your company name here} Printed 5/10/2019
HydroCAD® 10.00-22 s/n 10493 © 2018 HydroCAD Software Solutions LLC Page 6

Summary for Subcatchment 4S: Pre Development

Runoff = 3.49 cfs @ 12.01 hrs, Volume= 0.183 af, Depth> 4.33"

Runoff by SCS TR-20 method, UH=SCS, Weighted-CN, Time Span= 5.00-20.00 hrs, dt= 0.05 hrs
Type II 24-hr Rainfall=6.83"

	Area (sf)	CN	Description
	12,064	69	50-75% Grass cover, Fair, HSG B
*	10,044	96	Paved parking, HSG B
	22,108	81	Weighted Average
	22,108		100.00% Pervious Area

Tc (min)	Length (feet)	Slope (ft/ft)	Velocity (ft/sec)	Capacity (cfs)	Description
10.0					Direct Entry,

Subcatchment 4S: Pre Development

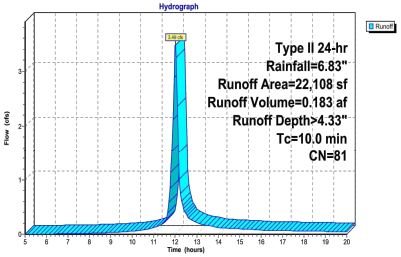

3 PRE-DEVELOPMENT HYDROGRAPH
N.T.S.

180217 Hydrocad *Type II 24-hr Rainfall=6.83"*
Prepared by {enter your company name here} Printed 11/13/2019
HydroCAD® 10.00-22 s/n 10493 © 2018 HydroCAD Software Solutions LLC Page 7

Summary for Subcatchment 5S: Post Development

Runoff = 4.24 cfs @ 12.01 hrs, Volume= 0.263 af, Depth> 6.23"

Runoff by SCS TR-20 method, UH=SCS, Weighted-CN, Time Span= 1.00-24.00 hrs, dt= 0.05 hrs
Type II 24-hr Rainfall=6.83"

	Area (sf)	CN	Description
	20,034	98	Paved parking, HSG B
	2,074	61	>75% Grass cover, Good, HSG B
	22,108	95	Weighted Average
	2,074		9.38% Pervious Area
	20,034		90.62% Impervious Area

Tc (min)	Length (feet)	Slope (ft/ft)	Velocity (ft/sec)	Capacity (cfs)	Description
10.0					Direct Entry,

Subcatchment 5S: Post Development

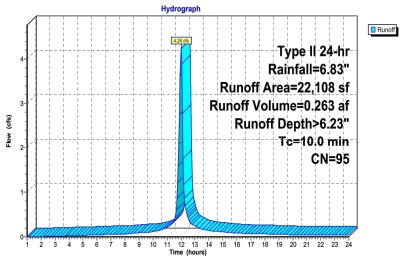

4 POST-DEVELOPMENT HYDROGRAPH
N.T.S.

Know what's below.
Call before you dig.

DRAINAGE NOTES:

- PRE-DEVELOPMENT WATERSHEDS: THE SITE WAS ANALYZED AS A SINGLE WATERSHED. THE EXISTING SITE IS CURRENTLY DRAINING TOWARDS THE EXISTING CITY RIGHT-OF-WAY. DRAINAGE AREA WAS MODELED WITH A CURVE NUMBER OF 81. BEING A MIX OF PERVIOUS AND IMPERVIOUS SURFACES, THIS RESULTS IN THE EXISTING PEAK DISCHARGE OF 3.49 CFS.
- POST-DEVELOPMENT WATERSHEDS: THE SITE WAS ANALYZED AS A SINGLE WATERSHED. DRAINAGE AREA 1 WAS MODELED WITH A WEIGHTED CURVE NUMBER OF 96, BEING A MIX OF IMPERVIOUS AND LANDSCAPE SURFACES. DRAINAGE AREA 1 HAS A PEAK DISCHARGE OF 4.24 CFS. THIS REPRESENTS AN INCREASE OF 0.75 CFS OVER EXISTING CONDITIONS. THIS SITE IS CONSIDERED IN-FILL, BUT A SMALL BASIN HAS BEEN DESIGNED ON SITE TO ACCOMMODATE FOR A SMALL AMOUNT OF STORAGE.
- IMPROVEMENTS: NO IMPROVEMENTS ARE CALLED FOR SINCE THIS SITE IS IN-FILL. A SMALL BASIN HAS BEEN DESIGNED ON SITE TO TAKE SOME FLOWS.
- SOIL TYPE: WEBSOILSURVEY REPORTS THE SOILS IN THIS AREA TO BE PRIMARILY MIDESSA FIND SANDY LOAM (HYDROLOGIC SOIL GROUP B).
- LANDSCAPE %: THE LANDSCAPE PERCENTAGE WAS CALCULATED USING THE SITE AREA MINUS THE BUILDING FOOT PRINT. THE LANDSCAPE PERCENTAGE WAS FOUND TO BE APPROXIMATELY 13.39% OF THIS AREA.
- TIME OF CONCENTRATION: IN ALL INSTANCES THE TIME OF CONCENTRATION WAS CALCULATED TO BE LESS THAN THE 10 MINUTE MINIMUM.
- DRAINAGE CALCULATIONS WERE PERFORMED WITH HYDROCAD SOFTWARE.
- RAINFALL DEPTH DURATION WAS TAKEN FROM TABLE 4-10 IN THE CITY OF MIDLAND DRAINAGE MANUAL, PAGE 4-32, DATED 6/92. (6.83 IN., 100YR, 24 HR STORM)

FEMA NOTE:

FLOOD STATEMENT: ACCORDING TO FEMA'S N.F.I.P. FLOOD INSURANCE RATE MAP #48329C0087F, DATED SEPTEMBER 16, 2005, ROUGHLY HALF OF THIS PROPERTY IS WITHIN THE SHADED PORTION OF ZONE "AE", DESIGNATED AS FLOODPLAIN WITH DETERMINED FLOOD ELEVATION OF 2784.00. CITY OF MIDLAND IDENTIFIES THIS FLOOD ZONE ELEVATION AS 2784.10.

THIS FLOOD ZONE IS PART OF A DRAINAGE CHANNEL AND NOT A CONTAINED PLAYA. AS SUCH, IT IS NOT SUBJECT TO THE NORMAL RESTRICTION OF MAINTAINING BALANCED EARTH WORK.

MAVERICK ENGINEERING
1909 West Wall Street, Suite "K" TBPE: F-15089
Midland, Texas 79701 TBPLS: F-10194454
Tel: (432) 262-0999 Fax: (432) 262-0989
www.Maverick-Engr.com

REVISIONS	BY	APPR.	DATE

DRAWN BY: CLB
CHECKED BY: ALM
APPROVED BY: ALM
DATE: 05/07/2019
JOB: 180217

DRAINAGE PLAN

FIRE STATION 5
LOT 08, BLOCK 01, BERKSHIRE PLACE ADDITION, SECTION 22
AN ADDITION TO THE CITY OF MIDLAND,
MIDLAND COUNTY, TEXAS.

PRELIMINARY REVIEW:

THESE PLANS ARE RELEASED UNDER THE SEAL OF ANDREW G. MILLER, P.E. #108172 AND MAVERICK ENGINEERING (FIRM # F-15089) ON THIS DAY 05/07/2019, FOR THE PURPOSES OF INTERIM/PRELIMINARY REVIEW. THEY SHALL NOT BE USED FOR THE PURPOSES OF CONSTRUCTION.

SHEET C240 OF 19

F:\2018\180217-MARTINEZ, ARCHITECTS-FIRE STATION 5 CONS\DRAWINGS\CIVIL CONSTRUCTION PLANS\180217 C240 DRAINAGE PLAN.DWG

© COPYRIGHT 2018 ALL RIGHTS RESERVED

4.1228

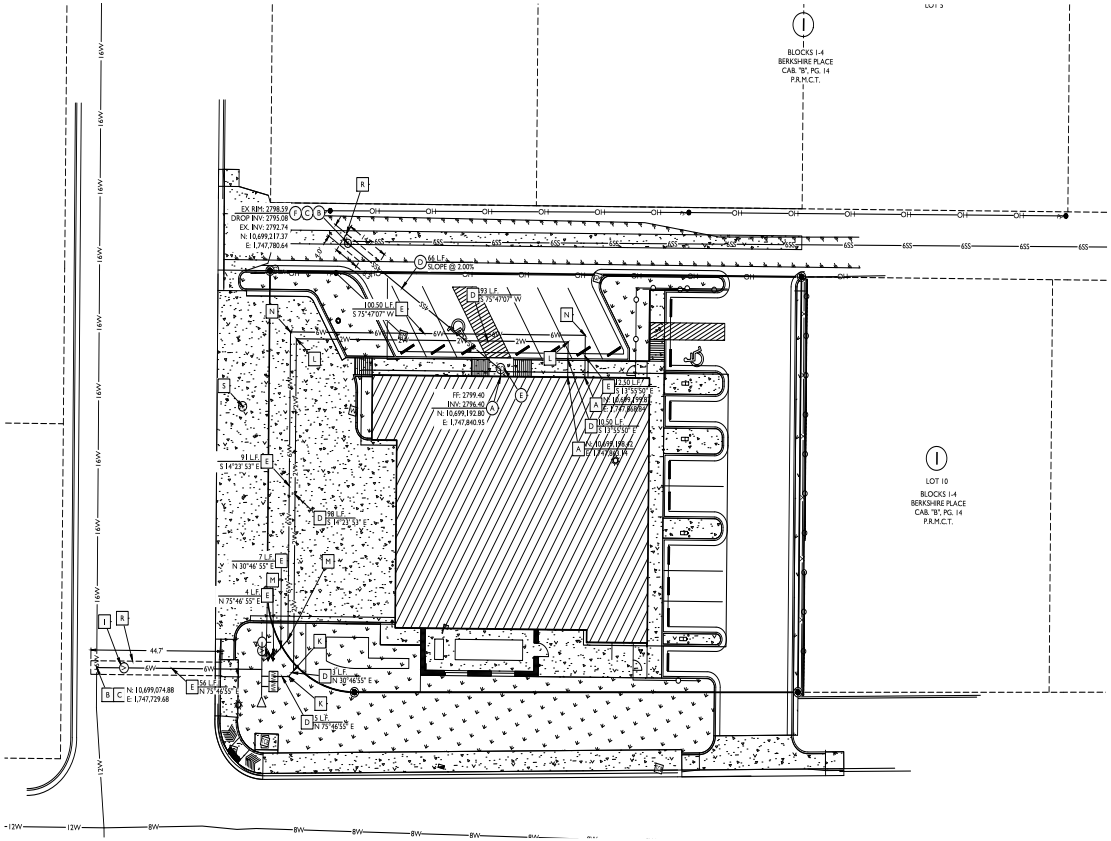

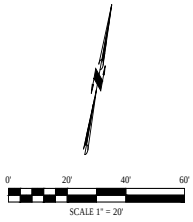

LEGEND

- DENOTES FOUND MONUMENT AS NOTED
- DENOTES SET 1/2" IRON ROD W/PLASTIC CAP MARKED "CTLS"
- DENOTES TEMPORARY BENCHMARK
- DENOTES EXISTING FIRE HYDRANT
- DENOTES EXISTING WATER VALVE
- DENOTES EXISTING WATER METER
- DENOTES EXISTING ELECTRIC METER
- DENOTES EXISTING TRAFFIC CONTROL BOX
- DENOTES EXISTING LIGHT POLE
- DENOTES EXISTING LIGHT POLE
- DENOTES EXISTING FLAG
- DENOTES EXISTING MANHOLE
- DENOTES EXISTING GUY ANCHOR
- DENOTES EXISTING POWER POLE
- 2850 DENOTES EXISTING CONTOUR
- DENOTES BOUNDARY LINE
- DENOTES SURROUNDING PROPERTY
- DENOTES EXISTING FLOODWAY
- DENOTES EDGE OF ASPHALT
- OH DENOTES EXISTING OVERHEAD ELECTRIC LINE
- DENOTES EXISTING FENCE
- 6SS DENOTES EXISTING 6" SEWER LINE
- 8W DENOTES EXISTING 8" WATER LINE
- 12W DENOTES EXISTING 12" WATER LINE
- 16W DENOTES EXISTING 16" WATER LINE
- 18SS DENOTES EXISTING 6" SEWER LINE
- 21SS DENOTES EXISTING 6" SEWER LINE
- DENOTES PROPOSED FIRE HYDRANT
- DENOTES PROPOSED POST INDICATOR VALVE
- DENOTES PROPOSED IRRIGATION METER
- DENOTES PROPOSED WATER METER
- DENOTES PROPOSED WATER VALVE
- DENOTES PROPOSED SEWER CLEANOUT
- DENOTES PROPOSED SEWER MANHOLE
- DENOTES PROPOSED PLUG
- DENOTES PROPOSED GAS METER
- 2W DENOTES PROPOSED 2" WATER LINE
- 6W DENOTES PROPOSED 6" WATER LINE
- 6SS DENOTES PROPOSED 4" SEWER LINE
- FL DENOTES PROPOSED FIRE LINE

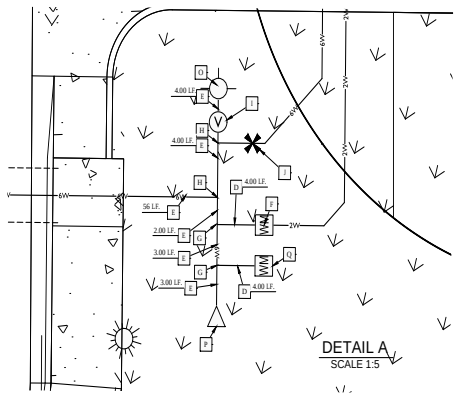

NOTES:

- IF CONTRACTOR FINDS AN EXISTING WATER METER ON SITE, THEY ARE TO NOTIFY ENGINEER OF RECORD IMMEDIATELY.
- ALL SEWER INSTALLED UNDER THIS CONTRACT WILL BE PRIVATE SEWER. MANHOLE COVERS WILL NOT STATE "CITY OF MIDLAND".
- EXISTING 8" WATER MAIN IS LOCATED IN TxDOT ROW - TxDOT PERMIT WILL BE REQUIRED FOR CONNECTION. DEVELOPER TO PROVIDE ALL NECESSARY INFORMATION AND DRAWINGS TO THE CITY OD MIDLAND ENGINEERING SERVICES FOR APPLICATION TO TxDOT.
- FIRE HYDRANT SERVED FROM MANIFOLD TO BE PRIVATE AND DELIVERED TO SITE PAINTED RED BY MANUFACTURE.
- FIRE HYDRANT BONNET TO BE COLOR CODED PER NFPA (LESS THAN 500 GPM RED, 500-999 GPM YELLOW, 1000-1499 GPM GREEN, GREATER THAN 1500 GPM BLUE). APPROPRIATE BONNET COLOR WILL BE DELIVERED TO SITE PAINTED BY MANUFACTURE.

ENGINEER'S UTILITY NOTES:

- CONTRACTOR TO VERIFY ALL EXISTING UTILITY TIE-IN CONNECTIONS AND VERIFY LOCATION AND ELEVATION PRIOR TO CONSTRUCTION.
- CONTRACTOR TO BUILD SEWER FROM TIE-IN POINT (A.K.A. DOWNHILL) AND PROCEED UPHILL.
- CITY OF MIDLAND TO BE NOTIFIED 48 HOURS BEFORE ANY CONSTRUCTION BEGINS.
- PIPE DEFLECTION IS TO BE PER MANUFACTURER'S RECOMMENDATIONS OR PER CITY REQUIREMENTS, WHICHEVER ALLOWS THE LESSER AMOUNT OF DEFLECTION.
- ALL UTILITIES TO BE INSTALLED PER TEXAS ADMINISTRATIVE CODE (TAC) STANDARD SEPARATION SPECIFICATIONS.
- A TWO (2) FOOT MINIMUM VERTICAL SEPARATION IS TO BE PROVIDED BETWEEN ANY SEWER MAIN/LINE CROSSING A WATER MAIN/LINE.
- EXCEPTIONS OR DEVIATIONS FROM THE ABOVE MINIMUM CLEARANCES MUST BE APPROVED AND SHOWN ON THE APPROVED WATER AND SEWER PLANS. WHEN UTILITY CONFLICTS ARE FOUND DURING CONSTRUCTION, ALL CHANGES AND REVISIONS MUST BE PRECEDED BY AN APPROVED PLAN REVISION,
- ANY AND ALL MORE STRINGENT REQUIREMENTS REQUIRED BY FEDERAL, STATE, COUNTY OR LOCAL CODES OR ORDINANCES TAKE PRECEDENCE.
- ALL CONSTRUCTION IN THE RIGHT OF WAY IS TO CONFORM TO THE CITY OF MIDLAND STANDARDS.
- ALL CONSTRUCTION ON SITE IS TO CONFORM TO MAVERICK ENGINEERING NOTES AND DETAIL SHEETS.
- CONCRETE OR ASPHALT DAMAGED DURING THE COURSE OF CONSTRUCTION IS TO BE REMOVED AND REPLACED WITH LIKE MATERIALS TO THE SATISFACTION OF THE ENGINEER OR THE CITY OF MIDLAND PRIOR TO FINAL INSPECTION.
- SANITARY SEWER IS TO BE PVC-SDR-35 UNLESS NOTED OTHERWISE.
- WATER IS TO BE C-900 PVC PIPE UNLESS NOTED OTHERWISE.
- THE CONTRACTOR IS TO PROVIDE ALL THRUST BLOCKING AT ALL FITTINGS AND BENDS AS REQUIRED. COMPLY WITH DETAILS IN THE CITY OF MIDLAND'S DESIGN & CONSTRUCTION STANDARDS.
- THE CONTRACTOR IS TO KEEP ALL EXISTING WATER AND SEWER MAINS IN SERVICE DURING CONSTRUCTION.
- ANY PROPOSED GAS LINES SHOWN ARE FOR SCHEMATIC PLANNING PURPOSES ONLY. ACTUAL GAS LINE ROUTES ARE TO BE NEGOTIATED BETWEEN THE CONTRACTOR AND THE GAS UTILITY PROVIDER. MAVERICK ENGINEERING DOES NOT ENGAGE IN GAS LINE DESIGN. PLEASE CONSULT WITH YOUR M.E.P. PLAN PROVIDER AND GAS UTILITY PROVIDER FOR GAS LINE DESIGN.

UTILITY WATER NOTES:

TYP. A. SEE M.E.P. PLANS FOR CONTINUATION. CONTRACTOR TO VERIFY LOCATION PRIOR TO CONSTRUCTION.

B. CONTRACTOR TO VERIFY UTILITY SIZE, LOCATION, ELEVATION AND TYPE PRIOR TO CONSTRUCTION AND INFORM ENGINEER OF CONFLICTS.

C. INSTALL 16X6" TAPPING SLEEVE AND VALVE PER CITY OF MIDLAND DETAIL 602 ON SHEET 310. TO BE TAPPED OFF OF LOOPED MANIFOLD ONCE CONSTRUCTED.

D. CONSTRUCT 2" DIAMETER WATER SERVICE LINE AS SHOWN. LENGTH OF LINE PER PLANS. LINE IS TO BE SCHEDULE 40 PVC OR APPROVED EQUAL. TRENCHING AND BEDDING PER CITY OF MIDLAND DETAIL 310 (A&B) ON SHEET 310.

E. CONSTRUCT 6" DIAMETER FIRE SERVICE LINE AS SHOWN. LENGTH OF LINE PER PLANS. LINE IS TO BE C-900 DR14 OR APPROVED EQUAL. TRENCHING AND BEDDING PER CITY OF MIDLAND DETAIL CITY OF MIDLAND DETAILS F03(A) & F03(B) ON SHEET C311.

F. INSTALL 2" WATER METER PER CITY OF MIDLAND DETAILS 604(A) & 604(B) ON SHEET C310.

G. CONSTRUCT 6"x2" REDUCING TEE WITH THRUST BLOCKING PER CITY OF MIDLAND DETAIL 615 ON SHEET C311.

H. CONSTRUCT 6"x6" TEE WITH THRUST BLOCKING PER CITY OF MIDLAND DETAIL 615 ON SHEET C311

I. INSTALL 6" GATE VALVE PER CITY OF MIDLAND DETAILS 608(A) & 608(B) ON SHEET C310.

J. INSTALL POST INDICATOR VALVE PER CITY OF MIDLAND DETAIL F01 ON SHEET C311.

K. CONSTRUCT 2" 45° BEND WITH RESTRAINED JOINT SYSTEM ON EACH END (PRIVATE UTILITY) / THRUST BLOCKING PER CITY OF MIDLAND DETAIL 616 ON SHEET C311 (PUBLIC UTILITY).

L. CONSTRUCT 2" 90° BEND WITH RESTRAINED JOINT SYSTEM ON EACH END (PRIVATE UTILITY) / THRUST BLOCKING PER CITY OF MIDLAND DETAIL 616 ON SHEET C311 (PUBLIC UTILITY).

M. CONSTRUCT 6" 45° BEND WITH RESTRAINED JOINT SYSTEM ON EACH END (PRIVATE UTILITY) / THRUST BLOCKING PER CITY OF MIDLAND DETAIL 616 ON SHEET C311 (PUBLIC UTILITY).

N. CONSTRUCT 6" 90° BEND WITH RESTRAINED JOINT SYSTEM ON EACH END (PRIVATE UTILITY) / THRUST BLOCKING PER CITY OF MIDLAND DETAIL 616 ON SHEET C311 (PUBLIC UTILITY).

O. INSTALL FIRE HYDRANT WITH VALVE PER CITY OF MIDLAND DETAIL 603 ON SHEET C310.

P. INSTALL 2" PLUG WITH THRUST BLOCKING PER CITY OF MIDLAND DETAIL 617 ON SHEET C310

Q. INSTALL 2" IRRIGATION METER PER CITY OF MIDLAND DETAILS 604(A) AND 604(B) ON SHEET C310

R. SAWCUT NEAT STRAIGHT EDGE TO ACCOMMODATE TRENCH PROTECTION EQUIPMENT, TO BE VERIFIED WITH CITY OF MIDLAND REPRESENTATIVE IN FIELD. CONTRACTOR IS TO MATCH EXISTING GRADES AND REPAIR ANY DAMAGED OR REMOVED ASPHALT PAVEMENT PER CITY OF MIDLAND DETAIL 311 ON SHEET C310.

S. REMOVE EXISTING WATER VALVE AND CAP WATER LINE.

UTILITY SEWER NOTES:

TYP. A. SEE M.E.P. PLANS FOR CONTINUATION.

B. INSTALL MANHOLE PIPE PENETRATION PER CITY OF MIDLAND DETAIL 314 ON SHEET C320.

C. CONTRACTOR TO VERIFY UTILITY SIZE, LOCATION, ELEVATION AND TYPE PRIOR TO CONSTRUCTION AND INFORM ENGINEER OF CONFLICTS.

D. CONSTRUCT 4" DIAMETER SEWER SERVICE LINE. LENGTH AND SLOPE OF LINE PER PLANS. LINE IS TO BE SDR-35 OR APPROVED EQUAL. TRENCHING AND BEDDING PER CITY OF MIDLAND DETAILS 310(A) & 310(B) ON SHEET C320.

E. INSTALL TWO WAY (DOUBLE) CLEANOUT PER DETAIL 01 ON SHEET C320.

F. INSTALL EXTERNAL DROP CONNECTION TO EXISTING MANHOLE PER CITY OF MIDLAND DETAIL 501 ON SHEET C320.

CAUTION:

UNDERGROUND TRAFFIC SIGNAL FACILITIES EXIST IN THIS AREA. CONTACT 811 OR THE CITY OF MIDLAND SIGNAL SHOP AT 432-685-7928 FOR MARK OUT AT LEAST TWO WORKING DAYS PRIOR TO EXCAVATING.

MAVERICK ENGINEERING
1909 West Wall Street, Suite "K"
Midland, Texas 79701 FIRM: F-15089
Tel: (432) 262-0993 Fax: (432) 262-0989
www.Maverick-Engr.com

NO.	REVISIONS	BY:	APPR.	DATE

DRAWN BY: CLB
CHECKED BY: ALM
APPROVED BY: ALM
DATE: 05/07/2019
JOB: 180217

UTILITY PLAN

FIRE STATION 5

LOT 08, BLOCK 01, BERKSHIRE PLACE ADDITION, SECTION 22
AN ADDITION TO THE CITY OF MIDLAND,
MIDLAND COUNTY, TEXAS.

PRELIMINARY REVIEW:

THESE PLANS ARE RELEASED UNDER THE SEAL OF ANDREW L. MILLIN, P.E. #108172 AND MAVERICK ENGINEERING @FIRM # F-15089) ON THIS DAY 05/07/2019, FOR THE PURPOSES OF INTERIM/PRELIMINARY REVIEW. THEY SHALL NOT BE USED FOR THE PURPOSES OF CONSTRUCTION.

SHEET C300 OF 19

F:\2018\180217-MARTINEZ ARCHITECTS-FIRE STATION 5\CIVIL\DRAWINGS\CIVIL CONSTRUCTION PLANS\180217 C300 UTILITY PLAN.DWG
© COPYRIGHT 2018 ALL RIGHTS RESERVED

4.1229

© COPYRIGHT 2018 ALL RIGHTS RESERVED

F:\2018\180217-MARTINEZ ARCHITECTS-FIRE STATION 5 CIVILS\DRAWINGS\CIVIL CONSTRUCTION PLANS\180217 C310 WATER DETAILS.DWG

STANDARD MULTI-FAMILY & COMMERCIAL WATER SERVICE MANIFOLD

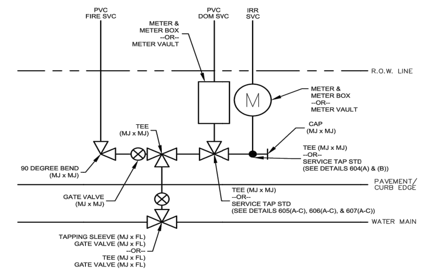

NOTES:

1. MATERIALS AND CONSTRUCTION METHODS TO CONFORM TO CITY OF MIDLAND STANDARDS AND SPECIFICATIONS.
2. CONSTRUCT AS SHOWN UNLESS OTHERWISE APPROVED IN WRITING BY THE CITY ENGINEER.

MIDLAND Engineering Services | DRAWN: DPM | CHECKED: JCF | APPROVED: MCC | EFFECTIVE DATE: 10/01/2018 | SCALE: | DETAIL: 602

TYPICAL FITTING RESTRAINT CONFIGURATIONS

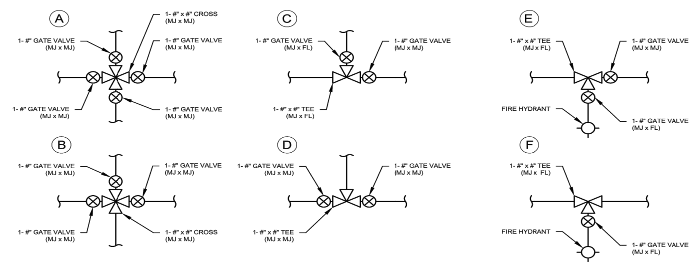

NOTES:

1. ALL MECHANICAL JOINT (MJ) FITTINGS TO BE RESTRAINED.
2. ALL FLANGES (FL) TO BE ON THE BRANCH SIDE OF TEE FITTINGS.
3. MATERIALS AND CONSTRUCTION METHODS TO CONFORM TO CITY OF MIDLAND STANDARDS AND SPECIFICATIONS.
4. CONSTRUCT AS SHOWN UNLESS OTHERWISE APPROVED IN WRITING BY THE CITY ENGINEER.

MIDLAND Engineering Services | DRAWN: DPM | CHECKED: JCF | APPROVED: MCC | EFFECTIVE DATE: 10/01/2018 | SCALE: NTS | DETAIL: 601

TYPICAL VALVE AND VALVE BOX

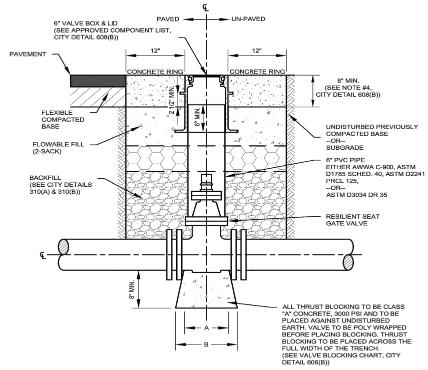

MIDLAND Engineering Services | DRAWN: DPM | CHECKED: JCF | APPROVED: MCC | EFFECTIVE DATE: 10/01/2018 | SCALE: NTS | DETAIL: 608(A)

FIRE HYDRANT NEW WATER MAIN

NOTES:

1. SET ALL VALVE BOXES IN A CONCRETE COLLAR WHEN PLACED AT THEIR FINAL GRADE. (SEE CITY DETAILS 608(A) & (B))
2. ALL CONCRETE PAVEMENT TO BE CLASS "C" CONCRETE, 3600 PSI.
3. LEAVE VALVE BOX 6" TO 10" ABOVE GRADE FOR NEW DEVELOPMENT AND OTHER STREETS AND ALLEYS SCHEDULED FOR IMMEDIATE PAVING UNTIL STREET WORK IS DONE. PAVING CONTRACTOR TO FINISHED GRADE BEFORE PLACING LAST COURSE OF HMAC SURFACE.
4. SET FRANGIBLE FLANGE OF FIRE HYDRANT A MINIMUM OF 2" AND A MAXIMUM OF 6" ABOVE SIDEWALK ELEVATION.
5. ON STREETS WHERE NO SIDEWALK IS TO BE CONSTRUCTED, SET CENTERLINE OF FIRE-HYDRANT AT 3' FROM PROPERTY LINE WITHIN RIGHT OF WAY.
6. PLACE FIRE HYDRANT CUT-OFF VALVE A MINIMUM OF 3' FROM THE CENTER LINE OF THE FIRE HYDRANT. THIS MAY REQUIRE THE USE OF A 90° BEND TO OFFSET THE FIRE HYDRANT.
7. SHAPE CONCRETE THRUST BLOCKS SO THAT NO WATER DRAINS ARE BLOCKED.
8. A TEE FITTING IS REQUIRED FOR A CONNECTION TO A NEW WATER MAIN, AND A TAPPING SLEEVE IS REQUIRED FOR A CONNECTION TO AN EXISTING WATER MAIN.
9. DO NOT WRAP FIRE HYDRANT SHOE IN PLASTIC.
10. MATERIALS AND CONSTRUCTION METHODS TO CONFORM TO CITY OF MIDLAND STANDARDS AND SPECIFICATIONS.
11. CONSTRUCT AS SHOWN UNLESS OTHERWISE APPROVED IN WRITING BY THE CITY ENGINEER.

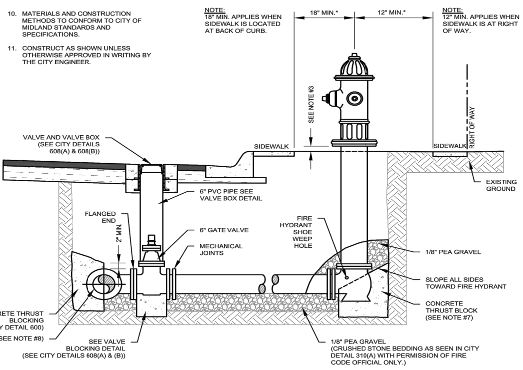

MIDLAND Engineering Services | DRAWN: DPM | CHECKED: JCF | APPROVED: MCC | EFFECTIVE DATE: 10/01/2018 | SCALE: NTS | DETAIL: 603

TYPICAL VALVE AND VALVE BOX DETAILS

APPROVED COMPONENT LIST

NO.	VALVES	VALVE COVERS	VALVE BOX
1	MUELLER 2360 M/J	MUELLER 2360 FL X FL	BASS & HAYS STANDARD 390-1 "SHORTY"
2	M & H 4067 M/J	M & H 4067-0	OR APPROVED EQUAL
3	CLOW 2838 M/J	CLOW 2840 FL X FL	
4	OR APPROVED EQUAL	OR APPROVED EQUAL	

VALVE BLOCKING CHART

PIPE SIZE	A	B
4"	5.0"	10.5"
6"	6.5"	1'-.0"
8"	6.5"	1'-.0"
10"	8.0"	1'-1.0"
12"	8.5"	1'-2.0"

NOTES:

1. FOR VALVES ON WATER MAIN PIPES LARGER THAN 12" SEE CITY DETAIL 609.
2. SETTING VALVE BOX TO GRADE MAY REQUIRE ADDING PVC PIPE. IF ADDITIONAL PIPE IS REQUIRED, USE BELL SECTION WITH GASKET AND SET BELL DOWN OVER EXISTING PIPE RISER. A GASKETED SELF CENTERING COLLAR MAY BE USED IN LIEU OF THE BELL SECTION.
3. CONCRETE RING TO BE CITY OF MIDLAND CLASS "C", 3600 PSI, UNLESS OTHERWISE NOTED.
4. USE FIBER REINFORCEMENT FOR ALL CONCRETE , WHETHER PAVEMENT OR THRUST BLOCKING.
5. 12" MINIMUM FOR CONCRETE RING IN AN ARTERIAL ROADWAY.
6. FLOWABLE FILL 2-SACK (2 SACK = 188 LBS/CY, PORTLAND CEMENT.) REQUIRED BENEATH ALL CONCRETE RINGS.
7. FLOWABLE FILL 2-SACK (2 SACK = 188 LBS/CY, PORTLAND CEMENT.) REQUIRED FOR ALL OVER EXCAVATION BACKFILL.
8. MATERIALS AND CONSTRUCTION METHODS TO CONFORM TO CITY OF MIDLAND STANDARDS AND SPECIFICATIONS.
9. CONSTRUCT AS SHOWN UNLESS OTHERWISE APPROVED IN WRITING BY THE CITY ENGINEER.

MIDLAND Engineering Services | DRAWN: DPM | CHECKED: JCF | APPROVED: MCC | EFFECTIVE DATE: 10/01/2018 | SCALE: NTS | DETAIL: 608(B)

1" AND 2" WATER METER AND SERVICE CONNECTION

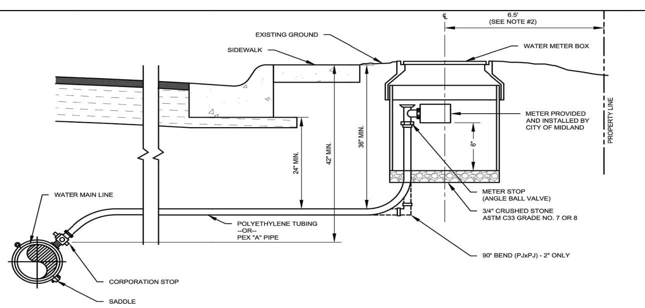

NOTES:

1. ALL WATER SERVICES TO BE 1" OR 2" DIAMETER.
2. THE DISTANCE FROM PROPERTY LINE SHOWN IS FOR 5' SIDEWALK AT THE PROPERTY LINE. WHEN 5' SIDEWALK IS PLACED AT THE BACK OF CURB, PLACE METER BOXES A MINIMUM OF 6.5' FROM THE BACK OF CURB.
3. TWO ADJACENT SERVICE LATERALS MAY BE PLACED IN THE SAME TRENCH. EACH TAP MUST BE SEPARATE AND HAVE BOTH A CORPORATION STOP AND A METER STOP. ("BULLHEAD TAPS ARE NOT PERMITTED".)
4. MATERIALS AND CONSTRUCTION METHODS TO CONFORM TO CITY OF MIDLAND STANDARDS AND SPECIFICATIONS.
5. CONSTRUCT AS SHOWN UNLESS OTHERWISE APPROVED IN WRITING BY THE CITY ENGINEER.

MIDLAND Engineering Services | DRAWN: DPM | CHECKED: JCF | APPROVED: MCC | EFFECTIVE DATE: 10/01/2018 | SCALE: NTS | DETAIL: 604(A)

BLOCKING FOR CAP

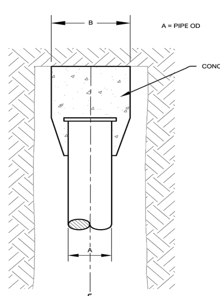

CAP BLOCKING

PIPE OD A	BLOCKING DIMENSIONS B	*C
4"	1'-0"	1'-0"
6"	1'-7"	1'-0"
8"	2'-2"	2'-2"
10"	2'-8"	2'-8"
12"	3'-2"	3'-2"
14"	3'-8"	3'-8"
16"	4'-3"	4'-3"

*C - VERTICAL DEPTH OF CONCRETE BEARING ON UNDISTURBED EARTH

NOTES:

1. CAP ALL WATER MAIN STUB OUTS.
2. FORM ALL CONCRETE THRUST BLOCKING . DO NOT PLACE UN-FORMED THRUST BLOCKING.
3. ALL THRUST BLOCKING TO BE CLASS "A" CONCRETE, 3000 PSI, AND TO BE PLACED AGAINST UNDISTURBED EARTH. USE FIBER REINFORCEMENT THROUGHOUT.
4. FITTINGS TO BE POLY WRAPPED BEFORE BLOCKING IS PLACED.
5. THRUST BLOCKING DESIGN TO BE PROVIDED IN CONSTRUCTION DRAWINGS FOR PIPES LARGER THAN 16" DIAMETER.
6. MATERIALS AND CONSTRUCTION METHODS TO CONFORM TO CITY OF MIDLAND STANDARDS AND SPECIFICATIONS.
7. CONSTRUCT AS SHOWN UNLESS OTHERWISE APPROVED IN WRITING BY THE CITY ENGINEER.

MIDLAND Engineering Services | DRAWN: DPM | CHECKED: JCF | APPROVED: MCC | EFFECTIVE DATE: 10/01/2018 | SCALE: NTS | DETAIL: 617

APPROVED COMPONENT LIST

1" WATER METER SERVICE	2" WATER METER SERVICE
SADDLE OPTION 1: DUCTILE IRON W/DUAL BAND CC THREAD STEEL STRAP 1. FORD FCD202 SADDLE 2. MUELLER DR 2 S SERIES 3. A.Y. MCDONALD SERIES 4855A 4. OR APPROVED EQUAL	SADDLE OPTION 1: DUCTILE IRON W/DUAL BAND CC THREAD STEEL STRAP 1. FORD FCD202 SADDLE 2. MUELLER DR 2 S SERIES 3. A.Y. MCDONALD SERIES 4855A 4. OR APPROVED EQUAL
SADDLE OPTION 2: BRASS W/DUAL BAND CC THREAD STEEL STRAP 1. FORD 202BSD SADDLE 2. MUELLER BR 2 S SERIES 3. A.Y. MCDONALD SERIES 3855 4. OR APPROVED EQUAL	SADDLE OPTION 2: BRASS W/DUAL BAND CC THREAD STEEL STRAP 1. FORD 202BSD SADDLE 2. MUELLER BR 2 S SERIES 3. A.Y. MCDONALD SERIES 3855 4. OR APPROVED EQUAL
CORPORATION STOP 1. FORD FB1000-4-G-NL 2. MUELLER B-25008N 3. A.Y. MCDONALD SERIES 74701B-22 1 4. OR APPROVED EQUAL	CORPORATION STOP 1. FORD FB1000-7-G-NL 2. MUELLER B-25008N 3. A.Y. MCDONALD SERIES 74701B-22 2 4. OR APPROVED EQUAL
CURB STOP METER VALVE 1. FORD BA43-444W-G-NL 2. MUELLER B-25172N 3. A.Y. MCDONALD SERIES 74602B-22 1 4. OR APPROVED EQUAL	CURB STOP METER VALVE 1. FORD BFA43-777W-G-NL 2. MUELLER B-25172N 3. A.Y. MCDONALD SERIES 74602B-22 2 4. OR APPROVED EQUAL
WATER METER BOX 1. EAST JORDAN 32197099A02 2. OR APPROVED EQUAL	WATER METER BOX 1. EAST JORDAN 32244000A01 2. OR APPROVED EQUAL
SERVICE LINE PIPE 1. ASTM D-2737 POLYETHYLENE TUBING 2. MUNICI PEX 'A' PIPE 3. OR APPROVED EQUAL	SERVICE LINE PIPE 1. ASTM D-2737 POLYETHYLENE TUBING 2. MUNICI PEX 'A' PIPE 3. OR APPROVED EQUAL

NOTES:

1. ALL COMPONENTS OF ANY WATER METER SERVICE LINE MUST COME FROM THE SAME BRAND WHENEVER POSSIBLE.
2. PLASTIC WRAP ALL SADDLES.
3. MATERIALS AND CONSTRUCTION METHODS TO CONFORM TO CITY OF MIDLAND STANDARDS AND SPECIFICATIONS.
4. CONSTRUCT AS SHOWN UNLESS OTHERWISE APPROVED IN WRITING BY THE CITY ENGINEER.

MIDLAND Engineering Services | DRAWN: DPM | CHECKED: JCF | APPROVED: MCC | EFFECTIVE DATE: 10/01/2018 | SCALE: NTS | DETAIL: 604(B)

1" AND 2" WATER METER AND SERVICE CONNECTION

PRELIMINARY REVIEW:

THESE PLANS ARE RELEASED UNDER THE SEAL OF ANDREW L. MELLEN, P.E. #106572 AND MAVERICK ENGINEERING (FIRM # F-15089) ON THIS DAY 05/07/2019, FOR THE PURPOSES OF INTERIM/PRELIMINARY REVIEW. THEY SHALL NOT BE USED FOR THE PURPOSES OF CONSTRUCTION.

WATER DETAILS

FIRE STATION 5

LOT 08, BLOCK 01, BERKSHIRE PLACE ADDITION, SECTION 22
AN ADDITION TO THE CITY OF MIDLAND,
MIDLAND COUNTY, TEXAS.

DRAWN BY: CLB
CHECKED BY: ALM
APPROVED BY: ALM
DATE: 05/07/2019
JOB: 180217

Δ	REVISIONS	BY	APPR.	DATE

MAVERICK ENGINEERING
1909 West Wall Street, Suite "K"
Midland, Texas 79701 FIRM: F-15089
Tel: (432) 262-0999 Fax: (432) 262-0989
www.Maverick-Eng.com

© COPYRIGHT 2018 ALL RIGHTS RESERVED F:\2018\180217-MARTINEZ ARCHITECTS-FIRE STATION 5 CIVILS\DRAWINGS\CIVIL CONSTRUCTION PLANS\180217 C311 WATER DETAILS.DWG

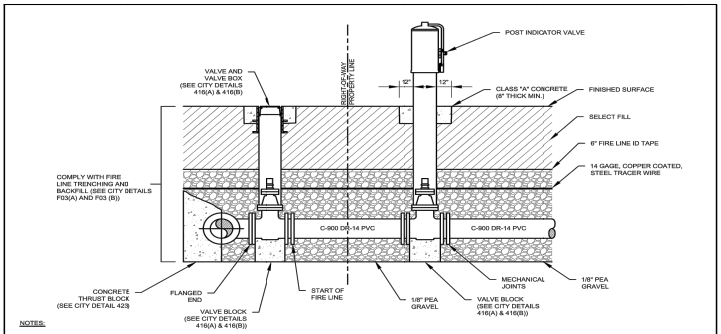

NOTES:

1. ALL VALVE BOXES TO BE SET IN CONCRETE COLLARS AND BE FLUSH WITH THE FINAL SURFACE GRADE.
2. A TEE FITTING IS REQUIRED FOR A CONNECTION TO A NEW WATER MAIN, AND A TAPPING SLEEVE IS REQUIRED FOR A CONNECTION TO AN EXISTING WATER MAIN.
3. MATERIALS AND CONSTRUCTION METHODS TO CONFORM TO CITY OF MIDLAND STANDARDS AND SPECIFICATIONS.
4. CONSTRUCT AS SHOWN UNLESS OTHERWISE APPROVED IN WRITING BY BOTH THE ENGINEERING SERVICES REPRESENTATIVE AND THE FIRE CODE OFFICIAL.

MIDLAND Engineering Services	DRAWN: DPM CHECKED: JCF APPROVED: MCC	EFFECTIVE DATE: __/__/__	SCALE: NTS
FIRE SERVICE LINE			DETAIL: F01

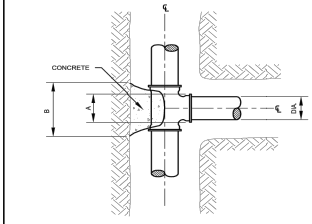

TEE

"T" BLOCKING
DESIGN 180 PSI LINE PRESSURE
SOIL BEARING CAP 2KSF

"T" RUN DIA.	STEM DIA.	BLOCKING DIMENSIONS		
		A	B	*C
TEE				
4"	ALL	1'1"	1'-0"	1'-0"
6"	ALL	1'-2"	1'-7"	1'-0"
8"	ALL	1'-4"	2'-2"	2'-2"
10"	ALL	1'-8"	2'-8"	2'-8"
1'-0"	THRU 6"	1'-10"	1'-10"	1'-8"
1'-0"	OVER 6"	1'-10"	3'-2"	3'-2"
1'-2"	THRU 8"	2'-2"	2'-2"	1'-11"
1'-2"	OVER 8"	2'-2"	3'-8"	3'-8"
1'-4"	THRU 8"	2'-4"	2'-4"	2'-2"
1'-4"	OVER 8"	2'-4"	4'-3"	4'-3"

*C - VERTICAL DEPTH OF CONCRETE BEARING ON UNDISTURBED EARTH

NOTE:

1. FORM ALL CONCRETE THRUST BLOCKING. DO NOT PLACE UN-FORMED THRUST BLOCKING.
2. BLOCKING FOR TEES LARGER THAN 16" RUN TO BE SHOWN ON THE PLANS.
3. ALL THRUST BLOCKING TO BE CLASS "A" CONCRETE, 3000 PSI, AND TO BE PLACED AGAINST UNDISTURBED EARTH. USE FIBER REINFORCEMENT THROUGHOUT.
4. FITTING TO BE POLY WRAPPED BEFORE BLOCKING IS PLACED.
5. MATERIALS AND CONSTRUCTION METHODS TO CONFORM TO CITY OF MIDLAND STANDARDS AND SPECIFICATIONS.
6. CONSTRUCT AS SHOWN UNLESS OTHERWISE APPROVED IN WRITING BY THE CITY ENGINEER.

MIDLAND Engineering Services	DRAWN: DPM CHECKED: JCF APPROVED: MCC	EFFECTIVE DATE: 10/01/2018	SCALE: NTS
BLOCKING FOR TEE			DETAIL: 615

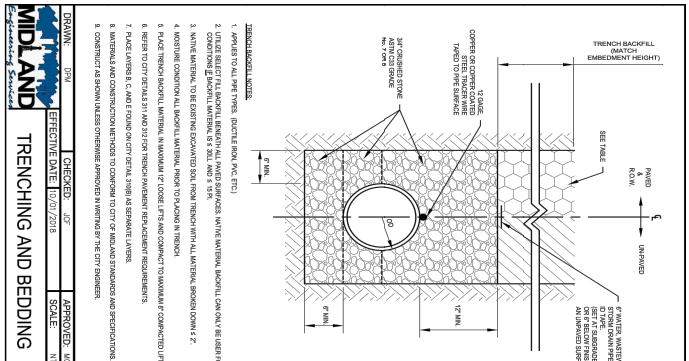

TRENCH BACKFILL NOTES:

1. APPLIES TO ALL PIPE TYPES. (DUCTILE IRON, PVC, ETC.)
2. USE SELECT FILL FOR ALL BACKFILL MATERIAL.
3. NATIVE MATERIAL TO BE EXISTING EXCAVATED SOIL FROM TRENCH WITH ALL MATERIAL BROKEN DOWN ≤ 2".
4. MOISTURE CONDITION ALL BACKFILL MATERIAL TO MAXIMUM 4" LOOSE LIFTS AND COMPACT TO MAXIMUM 8" COMPACTED LIFTS.
5. PLACE TRENCH BACKFILL MATERIAL IN MAXIMUM 12" LOOSE LIFTS AND COMPACT TO MAXIMUM 8" COMPACTED LIFTS.
6. REFER TO CITY DETAILS 311 AND 312 FOR TRENCH PAVEMENT REPLACEMENT REQUIREMENTS.
7. PLACE LAYERS B, C, AND E FOUND ON CITY DETAIL 310(B) AS SEPARATE LAYERS.
8. MATERIALS AND CONSTRUCTION METHODS TO CONFORM TO CITY OF MIDLAND STANDARDS AND SPECIFICATIONS.
9. CONSTRUCT AS SHOWN UNLESS OTHERWISE APPROVED IN WRITING BY THE CITY ENGINEER.

MIDLAND Engineering Services	DRAWN: DPM CHECKED: JCF APPROVED: MCC	EFFECTIVE DATE: 10/01/2018	SCALE: NTS
TRENCHING AND BEDDING			DETAIL: 310(A)

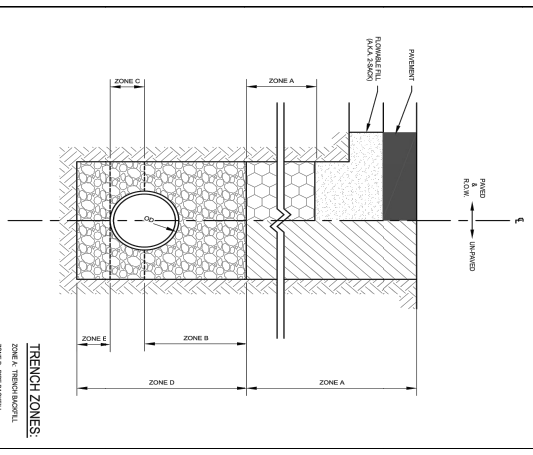

TRENCH ZONES:

ZONE A: TRENCH BACKFILL
ZONE B: PIPE BACKFILL
ZONE C: HAUNCHING
ZONE D: PIPE EMBEDMENT
ZONE E: BEDDING

MIDLAND Engineering Services	DRAWN: DPM CHECKED: JCF APPROVED: MCC	EFFECTIVE DATE: 10/01/2018	SCALE: NTS
TRENCHING AND BEDDING			DETAIL: 310(B)

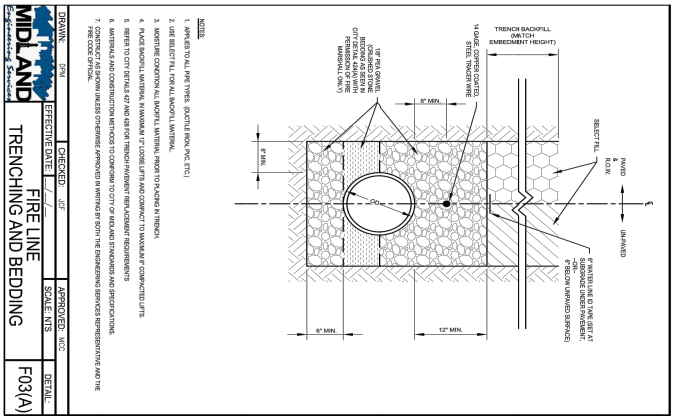

NOTES:

1. APPLIES TO ALL PIPE TYPES. (DUCTILE IRON, PVC, ETC.)
2. USE SELECT FILL FOR ALL BACKFILL MATERIAL.
3. MOISTURE CONDITION ALL BACKFILL MATERIAL PRIOR TO PLACING IN TRENCH.
4. PLACE BACKFILL MATERIAL IN MAXIMUM 12" LOOSE LIFTS AND COMPACT TO MAXIMUM 8" COMPACTED LIFTS.
5. REFER TO CITY DETAILS 427 AND 428 FOR TRENCH PAVEMENT REPLACEMENT REQUIREMENTS.
6. MATERIALS AND CONSTRUCTION METHODS TO CONFORM TO CITY OF MIDLAND STANDARDS AND SPECIFICATIONS.
7. CONSTRUCT AS SHOWN UNLESS OTHERWISE APPROVED IN WRITING BY BOTH THE ENGINEERING SERVICES REPRESENTATIVE AND THE FIRE CODE OFFICIAL.

MIDLAND Engineering Services	DRAWN: DPM CHECKED: JCF APPROVED: MCC	EFFECTIVE DATE: __/__/__	SCALE: NTS
FIRE LINE TRENCHING AND BEDDING			DETAIL: F03(A)

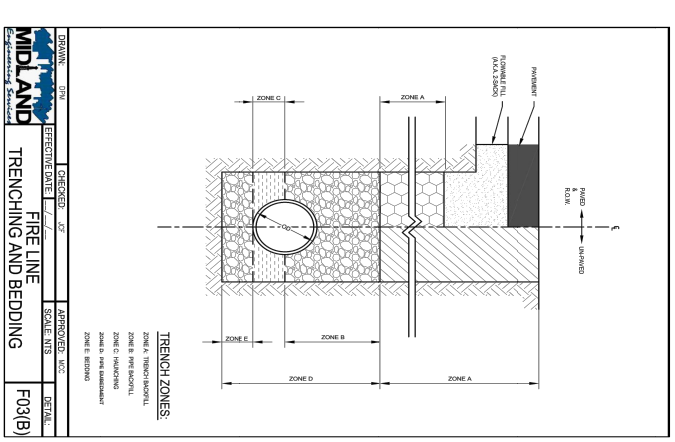

TRENCH ZONES:

ZONE A: TRENCH BACKFILL
ZONE B: PIPE BACKFILL
ZONE C: HAUNCHING
ZONE D: PIPE EMBEDMENT
ZONE E: BEDDING

MIDLAND Engineering Services	DRAWN: DPM CHECKED: JCF APPROVED: MCC	EFFECTIVE DATE: __/__/__	SCALE: NTS
FIRE LINE TRENCHING AND BEDDING			DETAIL: F03(B)

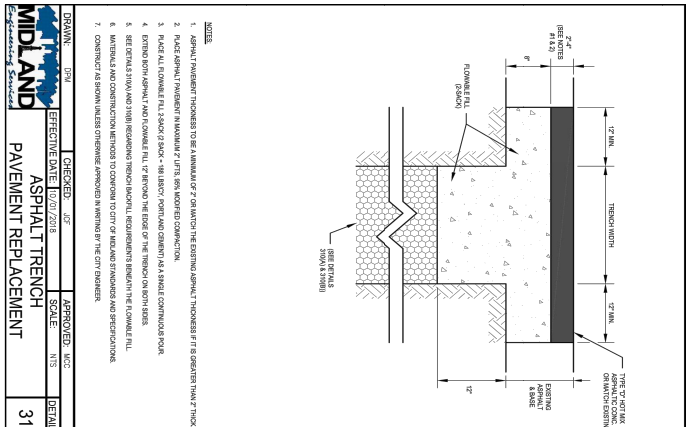

NOTES:

1. ASPHALT PAVEMENT THICKNESS TO BE A MINIMUM OF 2" OR MATCH THE EXISTING ASPHALT THICKNESS IF IT IS GREATER THAN 2" THICK.
2. PLACE ASPHALT PAVEMENT IN MAXIMUM 2" LIFTS @ 95% MODIFIED COMPACTION.
3. PLACE ALL FLOWABLE FILL 2-SACK (2 SACK = 188 LBS) CY PORTLAND CEMENT) AS A SINGLE CONTINUOUS POUR.
4. EXTEND BOTH ASPHALT AND FLOWABLE FILL 12" BEYOND THE EDGE OF THE TRENCH ON BOTH SIDES.
5. SEE DETAILS 310(A) AND 310(B) REGARDING TRENCH BACKFILL REQUIREMENTS BENEATH THE FLOWABLE FILL.
6. MATERIALS AND CONSTRUCTION METHODS TO CONFORM TO CITY OF MIDLAND STANDARDS AND SPECIFICATIONS.
7. CONSTRUCT AS SHOWN UNLESS OTHERWISE APPROVED IN WRITING BY THE CITY ENGINEER.

MIDLAND Engineering Services	DRAWN: DPM CHECKED: JCF APPROVED: MCC	EFFECTIVE DATE: 10/01/2018	SCALE: NTS
ASPHALT TRENCH PAVEMENT REPLACEMENT			DETAIL: 311

SHEET C311 OF 19

PRELIMINARY REVIEW:

THESE PLANS ARE RELEASED UNDER THE SEAL OF KENNETH L. MILLER, P.E. #108572 FOR REVIEW PURPOSES ONLY AND NOT FOR CONSTRUCTION PURPOSES. P.E. #108572 ON THESE DOCUMENTS DOES NOT INDICATE RESPONSIBILITY FOR THE ACCURACY OF THESE DOCUMENTS. THESE SHALL NOT BE USED FOR BIDDING OR CONSTRUCTION.

WATER DETAILS

FIRE STATION 5

LOT 08, BLOCK 01, BERKSHIRE PLACE ADDITION, SECTION 22
AN ADDITION TO THE CITY OF MIDLAND,
MIDLAND COUNTY, TEXAS.

DRAWN BY:	CLB
CHECKED BY:	ALM
APPROVED BY:	ALM
DATE:	05/07/2019
JOB:	180217

Δ	REVISIONS	BY	APPR.	DATE

MAVERICK ENGINEERING
1909 West Wall Street, Suite "K"
Midland, Texas 79701 FIRM: F-15089
Tel: (432) 262-0999 Fax: (432) 262-0989
www.Maverick-Eng.com

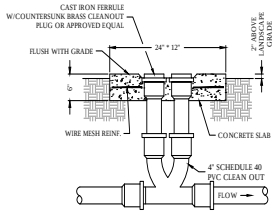

1 TWO WAY CLEAN OUT DETAIL
N.T.S.

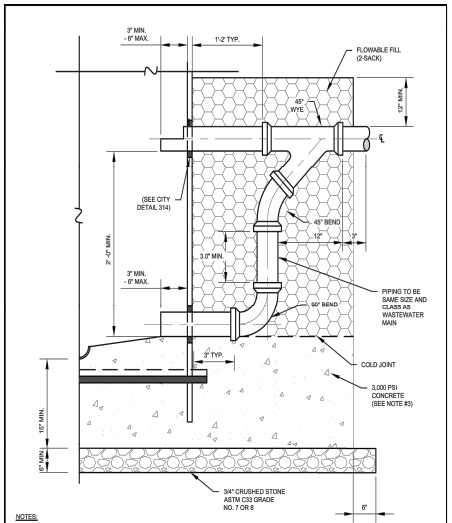

NOTES:
1. FLOWABLE FILL 2-SACK (2 SACK = 188 LBS/CY, PORTLAND CEMENT), REQUIRED FOR ALL OVER EXCAVATION BACKFILL
2. INSTALL BEND AND WYE AS NEAR TO MANHOLE WALL AS PRACTICAL, USUALLY 3'-4" FROM THE BEND AT THE BOTTOM.
3. ALL CONCRETE TO BE CLASS "A" CONCRETE.
4. MATERIALS AND CONSTRUCTION METHODS TO CONFORM TO CITY OF MIDLAND STANDARDS AND SPECIFICATIONS.
5. CONSTRUCT AS SHOWN UNLESS OTHERWISE APPROVED IN WRITING BY THE CITY ENGINEER.

DRAWN: DPM	CHECKED: JCF	APPROVED: MCC	
MIDLAND Engineering Services	EFFECTIVE DATE: 10/01/2018	SCALE: NTS	DETAIL:
	EXTERNAL DROP STRUCTURE		501

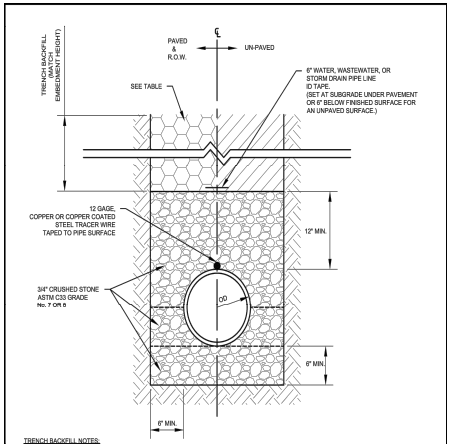

TRENCH BACKFILL NOTES:
1. APPLIES TO ALL PIPE TYPES. (DUCTILE IRON, PVC, ETC.)
2. UTILIZE SELECT FILL BACKFILL BENEATH ALL PAVED SURFACES. NATIVE MATERIAL BACKFILL CAN ONLY BE USER FOR UNPAVED TRENCH CONDITIONS IF BACKFILL MATERIAL IS ≤ 30LL AND ≤ 15 PI.
3. NATIVE MATERIAL TO BE EXISTING EXCAVATED SOIL FROM TRENCH WITH ALL MATERIAL BROKEN DOWN ≤ 2".
4. MOISTURE CONDITION ALL BACKFILL MATERIAL PRIOR TO PLACING IN TRENCH.
5. PLACE TRENCH BACKFILL MATERIAL IN MAXIMUM 12" LOOSE LIFTS AND COMPACT TO MAXIMUM 8" COMPACTED LIFTS.
6. REFER TO CITY DETAILS 311 AND 312 FOR TRENCH PAVEMENT REPLACEMENT REQUIREMENTS.
7. PLACE LAYERS B, C, AND E FOUND ON CITY DETAIL 310(B) AS SEPARATE LAYERS.
8. MATERIALS AND CONSTRUCTION METHODS TO CONFORM TO CITY OF MIDLAND STANDARDS AND SPECIFICATIONS.
9. CONSTRUCT AS SHOWN UNLESS OTHERWISE APPROVED IN WRITING BY THE CITY ENGINEER.

DRAWN: DPM	CHECKED: JCF	APPROVED: MCC	
MIDLAND Engineering Services	EFFECTIVE DATE: 10/01/2018	SCALE: NTS	DETAIL:
	TRENCHING AND BEDDING		310(A)

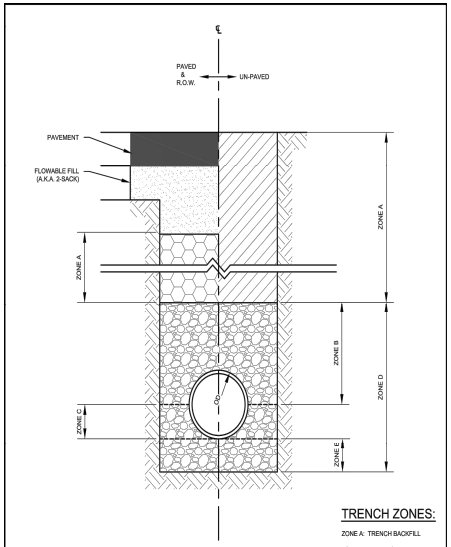

TRENCH ZONES:
ZONE A: TRENCH BACKFILL
ZONE B: PIPE BACKFILL
ZONE C: HAUNCHING
ZONE D: PIPE EMBEDMENT
ZONE E: BEDDING

DRAWN: DPM	CHECKED: JCF	APPROVED: MCC	
MIDLAND Engineering Services	EFFECTIVE DATE: 10/01/2018	SCALE: NTS	DETAIL:
	TRENCHING AND BEDDING		310(B)

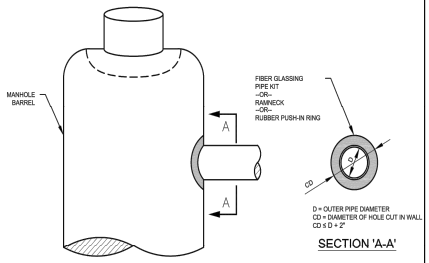

SECTION 'A-A'

NOTES:
1. THE DIAMETER OF THE CUTOUT IN THE MANHOLE BARREL IS TO BE NO MORE THAN 2.0" WIDER THAN THE OUTER WALL DIAMETER OF THE PENETRATING PIPE.
2. THE PENETRATING PIPE IS TO BE CENTERED IN THE MANHOLE BARREL CUTOUT.
3. PIPES PENETRATING MANHOLE MUST BE MINIMUM 6" DIAMETER, AND SERVICE LINES MUST BE CONSTRUCTED TO CITY WASTEWATER MAIN OR STORM DRAIN STANDARDS WITHIN PUBLIC RIGHT OF WAY OR EASEMENT.
4. FORM FLOW SURFACE AND MOUND CONCRETE AROUND PIPE PENETRATIONS, TO FORM A SEAL, IN ONE CONTINUOUS PLACEMENT OPERATION.
5. MATERIALS AND CONSTRUCTION METHODS TO CONFORM TO CITY OF MIDLAND STANDARDS AND SPECIFICATIONS.
6. CONSTRUCT AS SHOWN UNLESS OTHERWISE APPROVED IN WRITING BY THE CITY ENGINEER.

DRAWN: DPM	CHECKED: JCF	APPROVED: MCC	
MIDLAND Engineering Services	EFFECTIVE DATE: 10/01/2018	SCALE:	DETAIL:
	TYPICAL FIBERGLASS MANHOLE PIPE PENETRATION		314

MAVERICK ENGINEERING
1909 West Wall Street, Suite "K"
Midland, Texas 79701
Tel: (432) 262-0993 Fax: (432) 262-0989
www.Maverick-Engr.com
TBPE/TBPLS FIRM #: F-15089

BY	APPR.	DATE
Δ		

REVISIONS

DRAWN BY: CLB
CHECKED BY: AJM
APPROVED BY: AJM
DATE: 05/07/2019
JOB: 180217

SEWER DETAILS
FIRE STATION 5
LOT 08, BLOCK 01, BERKSHIRE PLACE ADDITION, SECTION 22
AN ADDITION TO THE CITY OF MIDLAND,
MIDLAND COUNTY, TEXAS.

PRELIMINARY REVIEW:
THESE PLANS ARE RELEASED UNDER THE SEAL OF ANDREW L. MELLIN, P.E. #108172 AND MAVERICK ENGINEERING (FIRM # F-15089) ON THIS DAY 05/07/2019, FOR THE PURPOSES OF INTERIM/PRELIMINARY REVIEW. THEY SHALL NOT BE USED FOR THE PURPOSES OF CONSTRUCTION.

SHEET C320 OF 19

F:\2018\180217-MARTINEZ ARCHITECTS-FIRE STATION 5 CIVIL\DRAWINGS\CIVIL CONSTRUCTION PLANS\180217 CSD SEWER DETAILS.DWG
© COPYRIGHT 2018 ALL RIGHTS RESERVED

4.1232

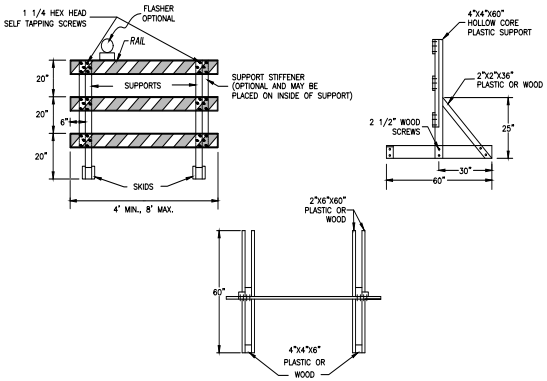

WOOD/PLASTIC TYPE III BARRICADE OPTION

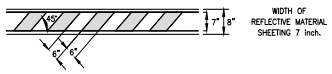

TYPICAL CHEVRON STRIPING DETAIL FOR BARRICADE RAIL

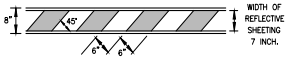

TYPICAL PANEL DETAIL
FOR SKID OR POST TYPE BARRICADES

TYPICAL STRIPING DETAIL FOR BARRICADE RAIL

TYPE I BARRICADE

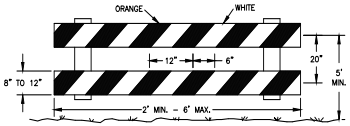

TYPE II BARRICADE

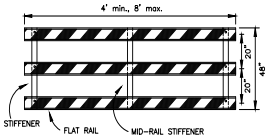

STIFFNER MAY BE INSIDE OR OUTSIDE OF SUPPORT.

* FOR DIMENSIONS OF COMPONENTS REFER TO TXDOT APPROVED PRODUCTS LIST.

TYPE III BARRICADE (TXDOT)

GENERAL NOTES FOR TYPE III BARRICADES

TYPE III BARRICADES ARE TO BE USED AT EACH END OF CONSTRUCTION PROJECT CLOSED TO ALL TRAFFIC.

BARRICADES EXTENDING ACROSS A ROADWAY SHOULD NOT HAVE STRIPES THAT SLOPE DOWNWARD IN THE DIRECTION TOWARD WHICH TRAFFIC MUST TURN IN DETOURING, WHEN BOTH RIGHT AND LEFT TURNS ARE PROVIDED FOR. THE CHEVRON STRIPING MAY SLOPE DOWNWARD IN BOTH DIRECTIONS FROM THE CENTER OF THE BARRICADE STRIPING OR RAILS. FOR THE RIGHT SIDE OF THE ROADWAY, STRIPING SHOULD SLOPE DOWNWARD TO THE LEFT.

FOR THE LEFT SIDE OF THE ROADWAY, STRIPING SHOULD SLOPE TO THE RIGHT.

IDENTIFICATION MARKINGS MAY BE SHOWN ONLY ON BACK SIDE 1". BARRICADES SHALL NOT BE PLACED PARALLEL TO TRAFFIC UNLESS AN ADEQUATE CLEAR ZONE IS PROVIDED. BARRICADES SHALL BE MADE USING PRE-QUALIFIED MATERIALS.

BARRICADES SHALL NOT BE USED AS A SIGN SUPPORT.

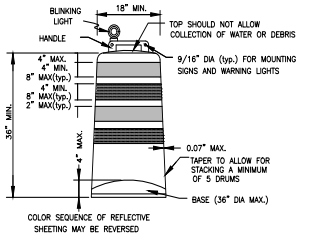

DRUM

CONTRACTOR SHALL PROVIDE, ON REQUEST FROM PROJECT ENGINEER, A LETTER FROM DRUM MANUFACTURER CERTIFYING THE PLASTIC DRUM MODEL NUMBER, THE YEAR AND MONTH OF CONSTRUCTION AND THAT IT MEETS THE SPECIFICATIONS ON THIS STANDARD

WHITE RETROREFLECTIVE TYPE C SHEETING ALTERNATING WITH ORANGE TYPE C RETROREFLECTIVE SHEETING. STRIPE PATTERN MAY BE REVERSED. ALL DRUMS USED IN SUCCESSION SHALL HAVE SAME STRIPE PATTERN.

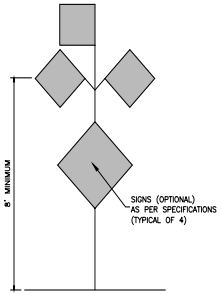

HIGH LEVEL WARNING DEVICE

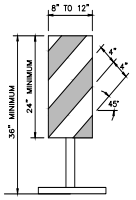

VERTICAL PANEL

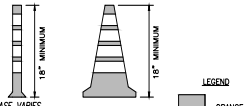

TUBULAR CONES

A - 18" FOR LOWER SPEEDS AND DAY TIME USE (< 40 mph)

B - 28" FOR HIGHER SPEEDS AND NIGHT TIME USE (> 45 mph)

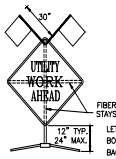

SHORT TERM STATIONARY/SHORT DURATION PORTABLE SIGN SUPPORTS

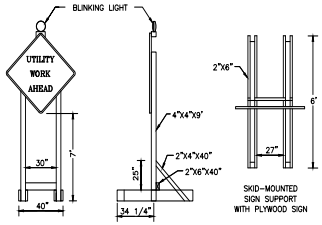

LONG/INTERMEDIATE TERM STATIONARY PORTABLE SIGN SUPPORTS

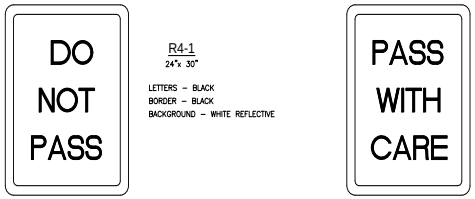

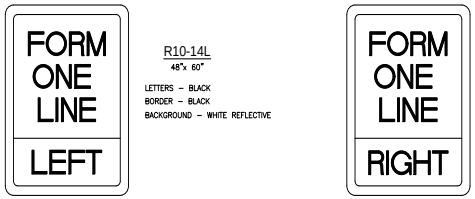

GENERAL NOTES:

1. TRAFFIC CONES MAY BE USED TO CONTROL TRAFFIC IN PROVIDING TEMPORARY DETOURS THROUGH THE PROJECT.
2. THE LOCATION OF BARRICADES AND THE TYPE OF SIGNS INDICATED ON THE PLANS ARE TO BE ERECTED JUST PRIOR TO BEGINNING OF CONSTRUCTION AND MAINTAINED UNTIL COMPLETION OF THE PROJECT.
3. ALL CONSTRUCTION SIGNS SHALL BE PROMPLTY REMOVED, COVERED, OR TURNED TO FACE AWAY FROM THE ROADWAY WHENEVER NOT IN USE.
4. OTHER SIGNS AND BARRICADES ARE TO BE ERECTED WHEN NECESSITATED BY THE EXECUTION OF THE CONSTRUCTION OF THE PROJECT TO PROVIDE FOR THE ACCESSIBILITY AND SAFETY OF THE PUBLIC.
5. ALL SIGNS THAT ARE TO CONVEY THEIR MESSAGE DURING THE HOURS OF DARKNESS SHALL BE REFLECTORIZED OR ILLUMINATED. SIGNS FOR DAYTIME USE ONLY MAY BE NONREFLECTORIZED BUT A FLOURESCENT BACKGROUND MATERIAL WHERE INCREASED DAYTIME VISIBILITY IS DESIRED.
6. FLASHERS (BATTERY OPERATED) SHALL BE FASTENED TO THE TOP CORNERS OF THE BARRICADES, AND SHALL BE YELLOW IN COLOR AND SHALL BE BRIGHT ENOUGH TO BE CONSPICUOUSLY VISIBLE DURING THE HOURS OF DARKENESS AT ALL DISTANCES UP TO 800' FROM THE UNIT.
7. ALL SIGNS SHALL BE CLEAN AND IN GOOD STATE OF REPAIR AT ALL TIMES ON THIS PROJECT.
8. ALL BARRICADE LAYOUTS MUST BE IN COMPLIANCE WITH THE LATEST EDITION OF THE TEXAS MANUAL ON UNIFORM CONTROL DEVICES FOR STREETS AND HIGHWAYS.

SIGN LEGEND

1 ROAD CONSTRUCTION 500 FT. AHEAD CW 20-1	2 FORM ONE LINE (LEFT) (RIGHT) R 20-2L OR R	3 18" 20 M.P.H. 18" W 13-1	4 DETOUR TYPE "C"
5 30" 30" W1-4R "L"	6 BARRICADE 2 @ 12'	7 BARRICADE 2 @ 12'	8 24" 24" R 3-2
9 STREET CLOSED TO THRU TRAFFIC	10 ROAD CONSTRUCTION AHEAD	11 END CONSTRUCTION 24" 60" G 20-2	12 ROAD CLOSED AHEAD 48" 48" CW 20-30

NOTES:

CITY WILL PAINT 2-4" SOLID YELLOW LINES ON EXISTING PAVEMENT ONLY. WHEN TRAFFIC IS ROUTED TO NEW PAVEMENT, CHANNELIZATION WILL BE ACCOMPLISHED BY CONTRACTOR, FURNISHING AND ERECTING VERTICAL PANELS. PAYMENT WILL BE INCLUDED IN LUMP SUM FOR ALL BARRICADES.

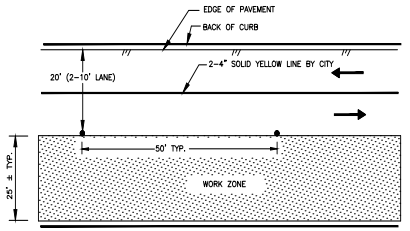

DETAIL "A"

MAVERICK ENGINEERING
1909 West Wall Street, Suite "K"
Midland, Texas 79701
Tel: (432) 262-0993 Fax: (432) 262-0989
www.Maverick-Engr.com
FIRM: F-15089

NO.	BY:	APPR.	DATE

REVISIONS

DRAWN BY: CLB
CHECKED BY: ALM
APPROVED BY: ALM
DATE: 05.07.2019
JOB: 180217

BARRICADE DETAILS
FIRE STATION 5
LOT 08, BLOCK 01, BERKSHIRE PLACE ADDITION, SECTION 22
AN ADDITION TO THE CITY OF MIDLAND,
MIDLAND COUNTY, TEXAS.

PRELIMINARY REVIEW:

THESE PLANS ARE RELEASED UNDER THE SEAL OF ANDREW L. MILLIN, P.E. #108172 AND MAVERICK ENGINEERING (FIRM # F-15089) ON THIS DAY 05/07/2019, FOR THE PURPOSES OF INTERIM/PRELIMINARY REVIEW. THEY SHALL NOT BE USED FOR THE PURPOSES OF CONSTRUCTION.

SHEET C500 OF 19

F:\2018\180217-MARTINEZ-ARCHITECTS-FIRE STATION 5 CONS\DRAWINGS\CIVIL CONSTRUCTION PLANS\180217 C500 BARRICADE DETAILS.DWG
© COPYRIGHT 2018 ALL RIGHTS RESERVED

4.1233

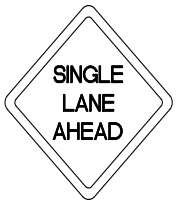

CW20-6D
48" x 48"

LETTERS – BLACK
BORDER – BLACK
BACKGROUND – ORANGE REFLECTIVE

CW20-5DL
48" x 48"

LETTERS – BLACK
BORDER – BLACK
BACKGROUND – ORANGE REFLECTIVE

CW20-7D
48" x 48"

LETTERS – BLACK
BORDER – BLACK
BACKGROUND – ORANGE REFLECTIVE

CW20-5DR
48" x 48"

LETTERS – BLACK
BORDER – BLACK
BACKGROUND – ORANGE REFLECTIVE

CW20-1D OR CW21-4A
48"x 48"

M4-9R
30"x 24"

M4-9S
30"x 24"

M4-8
24"x 12"

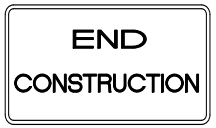

G20-2
60"x 24"

M4-10R
48"x 18"

NOTE:
LETTERS–BLACK
BORDER–BLACK
BACKGROUND–ORANGE REFLECTIVE

R 11-4
60"x 30"

R 11-2
48"x 30"

NOTE:
LETTERS–BLACK
BORDER–BLACK
BACKGROUND–WHITE REFLECTIVE

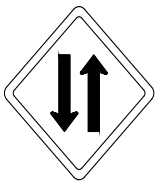

W6-3

SYMBOL, BORDER–BLACK
BACKGROUND–ORANGE REFLECTIVE

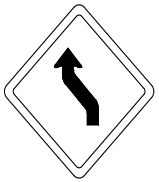

W1-4L

SYMBOL, BORDER–BLACK
BACKGROUND–ORANGE REFLECTIVE

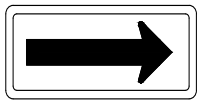

CW1-6

SYMBOL, BORDER–BLACK
BACKGROUND–ORANGE REFLECTIVE

W1-4R

SYMBOL, BORDER–BLACK
BACKGROUND–ORANGE REFLECTIVE

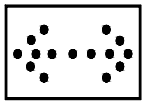

NOTE:
–ARROW PANELS SHALL BE EQUIPPED WITH AUTOMATIC DIMMING DEVICES.
–USE TYPE 'B' 30"X60"

TYPICAL FLASHING ARROW PANEL

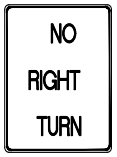

R3-1a

R3-2a

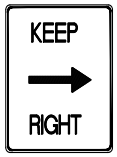

R4-7a

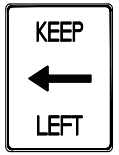

R4-8a

WHITE BACKGROUND WITH BLACK ARROW,
RED CIRCLE AND DIAGONAL

R3-1

R3-2

R3-7L

R3-7R

NOTE:
1– THESE SIGNS FOR USE ON STAND No. CSS-S3 (TYP.)
2– WHITE BACKGROUND, BORDER & LETTERS BLACK FOR SIGNS R3-2a, R3-1a, R4-8a, R4-7a, R3-7L, R3-7R.

NOTES:

1. TRAFFIC CONES MAY BE USED TO CONTROL TRAFFIC IN PROVIDING TEMPORARY DETOURS THROUGH THE PROJECT.
2. THE LOCATION OF BARRICADES AND THE TYPE OF SIGNS INDICATED ON THE PLANS ARE TO BE ERECTED JUST PRIOR TO BEGINNING OF CONSTRUCTION AND MAINTAINED UNTIL COMPLETION OF THE PROJECT.
3. ALL CONSTRUCTION SIGNS SHALL BE PROMPTLY REMOVED, COVERED, OR TURNED TO FACE AWAY FROM THE ROADWAY WHENEVER NOT IN USE.
4. OTHER SIGNS AND BARRICADES ARE TO BE ERECTED WHEN NECESSITATED BY THE EXECUTION OF THE CONSTRUCTION OF THE PROJECT TO PROVIDE FOR THE ACCESSIBILITY AND SAFETY OF THE PUBLIC.
5. ALL SIGNS THAT ARE TO CONVEY THEIR MESSAGE DURING THE HOURS OF DARKNESS SHALL BE REFLECTORIZED OR ILLUMINATED. SIGNS FOR DAYTIME USE ONLY MAY BE NON-REFLECTORIZED BUT A FLUORESCENT BACKGROUND MATERIAL SHOULD BE UTILIZED WHERE INCREASED DAYTIME VISIBILITY IS DESIRED.
6. FLASHERS (BATTERY OPERATED) SHALL BE FASTENED TO THE TOP CORNERS OF THE BARRICADES, AND SHALL BE YELLOW IN COLOR AND SHALL BE BRIGHT ENOUGH TO BE CONSPICUOUSLY VISIBLE DURING THE HOURS OF DARKNESS AT ALL DISTANCES UP TO 800' FROM THE UNIT.
7. ALL SIGNS SHALL BE CLEAN AND IN GOOD STATE OF REPAIR AT ALL TIMES ON THIS PROJECT.
8. FOR ADDITIONAL SIGNS, SEE LATEST EDITION OF THE TEXAS MANUAL ON UNIFORM CONTROL DEVICES FOR STREETS AND HIGHWAYS.
9. CONTRACTOR SHALL SUBMIT TRAFFIC CONTROL PLAN TO THE TxDOT AND CITY OF MIDLAND FOR APPROVAL.

MAVERICK ENGINEERING
1909 West Wall Street, Suite "K"
Midland, Texas 79701 FIRM: F-15089
Tel: (432) 262-0999 Fax: (432) 262-0989
www.Maverick-Engr.com

	BY	APPR.	DATE
Δ			
REVISIONS			

DRAWN BY: CLB
CHECKED BY: ALM
APPROVED BY: ALM
DATE: 05.07.2019
JOB: 180217

SIGN DETAILS

FIRE STATION 5
LOT 08, BLOCK 01, BERKSHIRE PLACE ADDITION, SECTION 22
AN ADDITION TO THE CITY OF MIDLAND,
MIDLAND COUNTY, TEXAS.

PRELIMINARY
REVIEW:

THESE PLANS ARE RELEASED UNDER THE SEAL OF ANDREW L. MILLIN, P.E. #108172 AND MAVERICK ENGINEERING (FIRM # F-15089) ON THIS DAY 05/07/2019, FOR THE PURPOSES OF INTERIM/PRELIMINARY REVIEW. THEY SHALL NOT BE USED FOR THE PURPOSES OF CONSTRUCTION.

SHEET C501 OF 19

F:\2018\180217-MARTINEZ ARCHITECTS-FIRE STATION 5 CONS\DRAWINGS\CIVIL CONSTRUCTION PLANS\180217 C501 SIGN DETAILS.DWG
© COPYRIGHT 2018 ALL RIGHTS RESERVED

4.1234

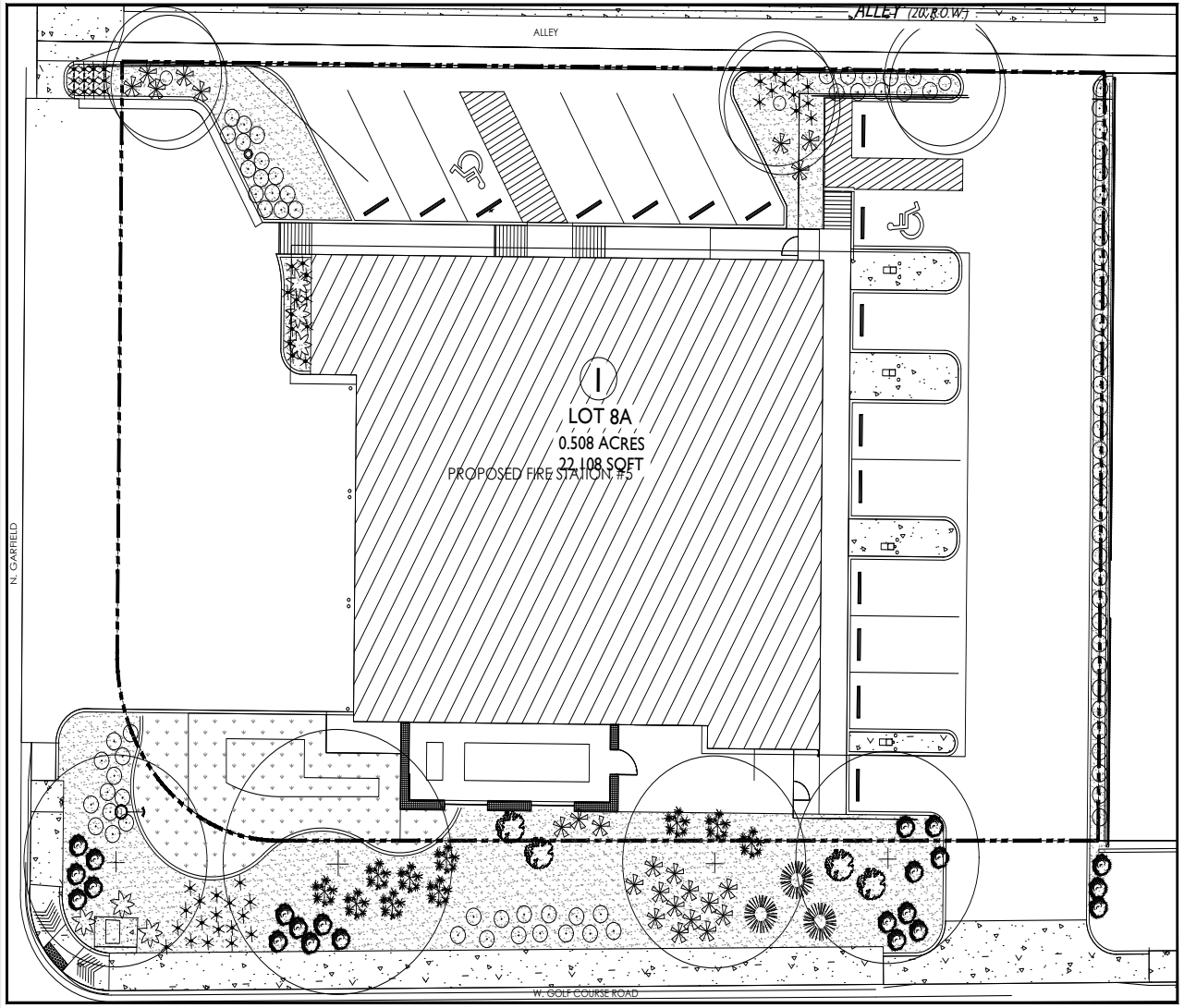

GENERAL NOTES AND CONDITIONS:

1. VERIFY EXISTING SITE INFORMATION, INCLUDING STRUCTURES, UTILITIES, PROPERTY LINES, LIMITS OF ROADWAYS, AND CURB/GUTTERS, THAT MAY EFFECT THE SCOPE OF WORK PRIOR TO BEGINING SITE CONSTRUCITON.
2. EXISTING UTILITIES ARE INDICATED FOR INFORMATION ONLY AND NOT INTENDED TO SHOW EXACT LOCATION. THE OWNER'S REPRESENTATIVE IS NOT RESPONSIBLE FOR THE LOCATION OF UNDERGROUND UTILITIES OR STRUCTURES WHETHER OR NOT SHOWN OR DETAILED AND INSTALLED BY ANY OTHER CONTRACT. THE CONTRACTOR SHALL LOCATE ALL UTILITIES AND MAINTAIN THE LOCATION DURING ALL PHASES OF THE WORK. THE CONTRACTOR SHALL BE RESPONSIBLE FOR ANY DAMAGE TO UTILITIES OR STRUCTURES AND ANY INJURIES THEREFROM. RESTORATION OF ANY UTILITIES DAMAGED BY THE CONTRACTOR SHALL BE AT THE CONTRACTORS EXPENSE TO THE SATISFACTION OF THE OWNER.
3. THE CONTRACTOR SHALL TAKE ALL NECESSARY STEPS AS REQUIRED TO PROPERLY PROTECT AND MAINTAIN HIS WORK FOR THE DURATION OF THIS CONTRACT. EQUIPMENT SHALL BE REMOVED OR SECURELY AFFIXED TO SITE AT END OF WORK DAY. DAMAGE OR THEFT OF EQUIPMENT IS SOLELY THE RESPONSIBILITY OF THE CONTRACTOR, AND ANY INJURY OR OTHER LIABILITY ARISING FROM EQUIPMENT OR MATERIALS LEFT OR STORED ON SITE SHALL SOLELY BE THE RESPONSIBILITY OF THE CONTRACTOR.
4. PROVIDE WRITTEN NOTIFICATION OF ALL DISCREPANCIES BETWEEN EXISTING AND PROPOSED SITE IMPROVEMENTS.
5. ALL WORK SHALL COMPLY WITH ALL APPLICABLE CODES AND ORDINANCES OF THE CITY IN WHICH THE PROJECT IS LOCATED, AND THE STATE OF TEXAS.
6. ANYTHING MENTIONED IN THE TECHNICAL SPECIFICATIONS AND NOT SHOWN ON THE DRAWINGS, OR SHOWN ON THE DRAWINGS AND NOT MENTIONED IN THE TECHNICAL SPECIFICATIONS SHALL BE OF LIKE EFFECT AS IF SHOWN OR MENTIONED IN BOTH. IN CASE OF A DISCREPANCY BETWEEN THE DRAWINGS AND TECHNICAL SPECIFICATIONS, THE MATTER SHALL BE IMMEDIATELY SUBMITTED TO THE OWNERS REPRESENTATIVE. WITHOUT HIS DECISIONS, SAID DISCREPENCY SHALL NOT BE ADJUSTED BY THE CONTRACTOR, SAVE ONLY AT HIS OWN RISK AND EXPENSE.
7. CONTRACTOR SHALL STAKE OUT PLAN TO ITS FULL EXTENT AND SHALL OBTAIN THE APPROVAL OF THE LANDSCAPE ARCHITECT AND OWNER, MAKING MODIFICATIONS AS REQUIRED PRIOR TO PROCEEDING WITH THE WORK.
8. NOTES AND DETAILS ON SPECIFIED DRAWINGS TAKE PRECEDENCE OVER GENERAL NOTES AND TYPICAL DETAILS.
9. ALL FINISHED GRADES SHALL PROVIDE FOR NATURAL RUNOFF OF WATER WITHOUT LOW SPOTS OR POCKETS. UNLESS SPECIFICALLY DRAWN AND DETAILED, ALL FLOW SHALL BE AWAY FROM ALL STRUCTURES OR PLAYING FIELDS ON SITE, AND SHALL NOT CROSS SIDEWALKS OR OTHER PEDESTRIAN FLOW AREAS.
10. HOLD FINISHED GRADES FOR PLANTING LAWN AREAS 1.5" BELOW TOP OF ADJACENT PAVEMENT. ALL FINISHED GRADES FOR PLANTING BEDS SHALL BE HELD AT 3" BELOW TOP OF ADJACENT PAVEMENT.
11. GRADUALLY ROUND OFF TOPS AND TOES OF ALL PLANTED SLOPES TO PRODUCE A SMOOTH ARCHITECTURAL TRANSITION BETWEEN RELATIVELY LEVEL AREAS AND SLOPES, UNLESS SPECIFICALLY DETAILED IN THE LANDSCAPE GRADING DETAILS.
12. GRADES SHOWN ARE FINISHED GRADES. SUBGRADES NEEDED TO ATTAIN FILL OR TOPSOIL PLACEMENT ARE NOT REFLECTED.
13. IF USED IN THE PLAN, ALL RETAINING WALL TOPS ARE LEVEL UNLESS OTHERWISE INDICATED.
14. PLANS DO NOT INDICATE ALL SLEEVE LOCATIONS! SLEEVES AND CONDUITS SHALL BE INSTALLED 18" BELOW ANY PAVEMENT, AND UNDER ALL SIDEWALKS OR PAVEMENT AREAS WHICH ARE WIDER THAN 48 INCHES. INSTALLING SUCH SHALL BE THE RESPONSIBILITY OF THE GENERAL CONTRACTOR WHO SHALL COORDINATE HIS WORK WITH ALL TRADES WHO MAY NEED SLEEVE ACCESS. UNLESS OTHERWISE INDICATED, ALL SLEEVES SHALL BE 4" SCHEDULE 40 PVC, AND SHALL EXTEND A MINIMUM OF 12" BEYOND THE PAVEMENT. WHERE MAINLINES ARE 3" OR LARGER, SLEEVES SHALL BE 6" SCHEDULE 40 PVC. ENDS SHALL BE CLEARLY MARKED WITH FLAGGING TAPE, PIPE, SURVEY FLAGS, OR OTHER SEMI-PERMANENT MARK.
15. ALL EXISTING TREES AND VEGETATION SHOULD BE CONSIDERED AS REMAINING UNLESS OTHERWISE SPECIFICALLY SHOWN. DO NOT REMOVE ANY TREES WITHOUT SPECIFIC PERMISSION FROM THE LANDSCAPE ARCHITECT. ALL TREES SHALL BE PROTECTED BY A MINIMUM 3' TALL VINYL SNOW FENCE OR SIMILAR BARRIER. FENCING SHALL BE PLACED UNDER THE OUTERMOST EDGE OF THE CANOPY OF THE TREE. NO VEHICULAR TRAFFIC SHALL BE ALLOWED UNDER ANY TREE CANOPY FOR ANY REASON. NO SOLVENTS, THINNERS, PAINT, CONCRETE WASH, OR OTHER MATERIALS SHALL BE DISBURSED UNDER THE CANOPY OF ANY TREE.
16. UNLESS SPECIFICALLY INDICATED, THE CONTRACTOR SHALL BE RESPONSIBLE FOR THE PROTECTION, MAINTENANCE, AND RESTORATION OF ANY ELECTRICAL, IRRIGATION AND DRAINAGE SYSTEMS ON SITE.
17. CONTRACTOR SHALL TAKE ALL NECESSARY STEPS TO NOTIFY ALL UTILITY COMPANIES PRIOR TO ANY DIGGING, TRENCHING, OR EXCAVATION ON SITE. CONSTRUCTION MAY NOT BEGIN PRIOR TO PROPER AND ACCURATE MARKING OF UNDERGROUND UTILITIES AND SECURING OF ANY AND ALL APPLICABLE PERMITS.
18. THE ELEMENTS WITHIN THIS PROJECT FALL WITHIN THE AMERICANS WITH DISABILITES ACT, AND AS SUCH, ALL SIDEWALKS, GRADES, AND BUILDING ELEMENTS MUST COMPLY.
19. HOLES, TRENCHES, PITS, OR OTHER ELEMENTS WHICH COULD CAUSE FALLS OR OTHER ACCIDENTS SHALL BE FULLY PROTECTED AND MARKED BY THE CONTRACTOR, WHO ASSUMES FULL LIABILITY FOR ANY INJURIES OR DAMAGES CAUSED BY CONSTRUCTION.
20. SPEED AND COORDINATION OF CONSTRUCTION ELEMENTS AND WORK TRADES IS ESSENTIAL FOR THIS PROJECTAND CONTRACTOR SHALL USE ALL NECESSARY METHODS TO IMPLEMENT BOTH.

CITY OF MIDLAND LANDSCAPE ORDINANCE REQUIREMENTS

1. 16 TOTAL VEHICLE PARKING SPACES WITHIN THE PROPOSED PROJECT SITE. CITY OF MIDLAND REQUIREMENTS PROVIDE FOR 10 TREES FOR THE FIRST 150 PARKING SPACES, OR A RATIO OF 1 TREE PER 15 SPACES.

2. 292 LINEAR FEET OF FRONTAGE ALONG GOLF COURSE AND N. GARFIELD. CITY OF MIDLAND REQUIREMENTS PROVIDE FOR 1 TREE PER 30 LINEAR FEET OF STREET FRONTAGE. WITH THE AMOUNT OF LINEAR FEET SHOWN ON THIS PROPERTY, THE CITY WILL REQUIRE A MINIMUM OF 10 TREES.

3. TOTAL REQUIRED TREES FOR THE SITE WILL BE A MINIMUM OF 12. LANDSCAPE PLAN ALLOWS FOR 7 (4 EXISTING 3 PROPOSED).

4. ALL SHADE TREES WILL HAVE A MINIMUM CALIBER OF 3" WHEN MEASURED 12" ABOVE THE GROUND.

5. ALL ORNAMENTAL TREES, IF ANY, WILL HAVE A MINIMUM CALIBER OF 2" WHEN MEASURED 12" ABOVE THE GROUND.

6. ALL CONIFER TREES SHALL BE A MINIMUM OF 6' TALL WHEN MEASURED ABOVE THE GROUND.

7. THE SITE WILL FEATURE AN AUTOMATED UNDERGROUND IRRIGATION SYSTEM UTILIZING WATER EFFICIENT DRIP IRRIGATION.

8. THE SITE WILL FEATURE STONE GROUND COVER INSTALLED OVER A PERMEABLE GEOTEXTILE WEED BARRIER AND SHALL BE CONSIDERED XERIC IN NATURE.

9. THIS SITE WILL FEATURE WATER EFFICIENT PLANT TREE MATERIAL.

10. WHEN PROPERLY MAINTAINED, THIS SITE WILL NOT ALLOW FOR RUNOFF FROM THE LANDSCAPE ONTO THE ADJACENT ROADWAYS.

11. NO TREE OR SHRUB MATERIAL SHALL BE PLACED IN SUCH A MANNER AS TO CREATE A HAZARD TO VEHICULAR OR PEDESTRIAN TRAFFIC, INCLUDING LINE-OF-SITE TRIANGLES. ANY SHRUB OR TREE LOCATION THAT NEEDS TO BE ADJUSTED DUE TO VISIBILITY, WRITTEN CONSENT MUST BE GRANTED BY LANDSCAPE ARCHITECT PRIOR TO RELOCATING.

12. A MINIMUM OF ALL OF THE ADJACENT RIGHT OF WAY AS WELL AS AN ADDITIONAL TEN PERCENT OF THE LOT AREA SHALL BE UTILIZED FOR LANDSCAPING.

13. LANDSCAPE PLANTS ARE NOT ALLOWED TO BE PLANTED IN RIGHT OF WAY. HOWEVER, BARE SOIL IN RIGHT OF WAY SHALL BE TREATED WITH PERMEABLE WEED-BARRIER FABRIC AND DECOMPOSED GRANITE.

PROJECT DESCRIPTION:

GARFIELD & GOLF COURSE
2200 W. GOLF COURSE, MIDLAND TEXAS
LANDSCAPE ARCHITECT:
KDC ASSOCIATES
JONATHON L. PRUESSNER, RLA
432.686.8001

SITE DETAILS:

TOTAL LOT AREA: 22,108 SF
TOTAL AREA OF BUILDING FOOTPRINTS: 6,710 SF
TOTAL LOT AREA - BUILDING FOOTPRINTS: 15,398 SF
TOTAL AREA REQUIRED TO BE LANDSCAPED (LOT AREA - BLDG AREA *10%): 1,540 SF
TOTAL AREA OF LOT THAT WILL BE LANDSCAPED 6,085 SF (17.6%)
TOTAL LENGTH OF STREET FRONTAGE: 292 LF
TOTAL NUMBER OF TREES REQUIRED PER STREET FRONTAGE: 10
TOTAL NUMBER OF TREES PROVIDED PER STREET FRONTAGE: 4* (EXISTING TREES)
TOTAL NUMBER OF PARKING SPACES: 16
TOTAL NUMBER OF TREES REQUIRED PER PARKING SPACES: 2
TOTAL NUMBER OF TREES PROVIDED PER PARKING SPACES: 3

LANDSCAPE POINTS

AS PER THE CITY OF MIDLAND LANDSCAPE POINT SYSTEM, THIS SITE ACHIEVES A SCORE OF 21 POINTS, BASED UPON THE FOLLOWING:

- PERMEABLE WEED BARRIER INSTALLED....2 POINTS
- DRIP IRRIGATION SYSTEM IN ALL AREAS 15 FEET OR LESS....10 POINTS
- TREE QUANTITY EXCEEDS REQUIRED QUANTITY (PER TREE)....0 POINTS
- DROUGHT TOLERANT SOD IS PRIMARY VARIETY OF TURF GRASS....5 POINTS
- LANDSCAPE AREA IS CURBED OR SHAPED TO HOLD WATER....2 POINTS
- 50% OF ALL PLANT MATERIAL IS WATER EFFICIENT....2 POINTS

*TREE EXCEPTION

THIS SITE CURRENTLY HAS AN EXISTING FIRE STATION THAT IS BEING DEMOLISHED AND REBUILT. THERE ARE ALSO SIX LARGE EXISTING TREES ON THE SITE. TWO OF THE TREES WILL BE REMOVED DUE TO THE NEW DEVELOPMENT. THE OTHER FOUR EXISTING TREES WILL BE PRESERVED IN PLACE. DUE TO THE SMALL SIZE OF THE SITE AND THE SIZE OF THE EXISTING TREES, THERE IS NOT SUFFICIENT SPACE IN THE LANDSCAPE AREAS TO INSTALL THE NUMBER OF REQUIRED TREES. IT IS REQUESTED THAT THE CITY ALLOW THE REDUCED QUANTITY OF TREES TO BE ALLOWED AND FOR THE EXISTING TREES TO BE COUNTED AS SHADE TREES. THE ALTERNATIVE IS TO REMOVE THE FOUR LARGE PECAN TREES IN ORDER TO PLANT THE REQUIRED AMOUNT OF TREES PER THE ORDINANCE AND WOULD RESULT IN AN OVERCROWDED LANDSCAPE.

01 Landscape Plan
SCALE: 1" = 10'-0"

0 5 10 20

PROFESSIONAL SEAL

LOGO / CONTACT

KDCA associates
25 Years
-Established 1994-
Environmental Design + Planning Solutions
www.kdcassociates.com 4400 N. Big Spring, Ste. 205, Midland, Texas, 79705 432.686.8001

DESIGN TEAM

Architectural
Martinez Architects

Civil Engineer
Maverick Engineering

Structural
Matrix Structural Engineers

M/E/P/T
DBR

Landscape Architect
KDC Associates

FIRE STATION #5
CITY OF MIDLAND
2200 W GOLF COURSE RD
MIDLAND TEXAS 79701

PROJECT No: MA 18017

ISSUE
100% DESIGN DEVELOPMENT 22-MAY-2019
75% CONSTRUCTION DOCUMENTS 26-JUN-2019
ISSUE FOR PERMIT 30-JUL-2019

4.1235

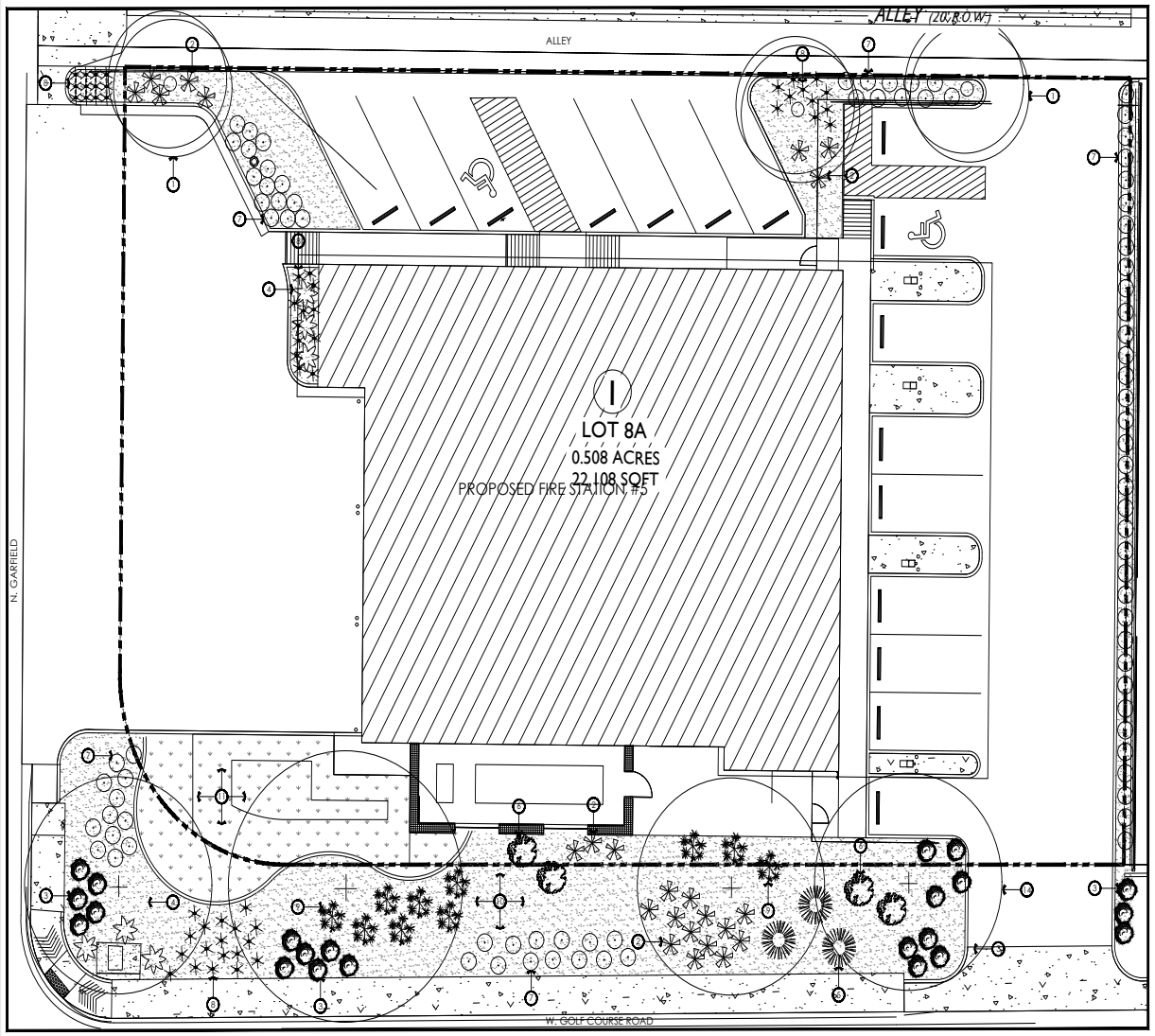

PLANTING MATERIALS :

1. PISTACIA CHINENSIS - CHINESE PISTACHE; (3); 4" CALIPER; SINGLE TRUNK WITH SIMILAR CANOPY SIZE, HEIGHT, AND SHAPE. 100 GALLON CONTAINER GROWN ONLY. PLACE AS SHOWN WITH A MIN. 10'-0" FROM EDGE OF PAVEMENT. PRUNE TO DISCRETION OF LANDSCAPE ARCHITECT ON SITE. — TYPICAL PLAN SYMBOL:
2. HESPERALOE PARVIFLORA- RED YUCCA; (24); 5 GALLON CONTAINER GROWN; 12" TALL X 12" WIDE . — TYPICAL PLAN SYMBOL:
3. EUPHORBIA RIGIDA - GOPHER PLANT (22); 5 GALLON CONTAINER GROWN; 12" TALL X 12" WIDE . — TYPICAL PLAN SYMBOL:
4. YUCCA ROSTRATA - BEAKED YUCCA; (6); 4' MIN. HEIGHT, 4" MIN TRUNK; CONTAINER GROWN ONLY. — TYPICAL PLAN SYMBOL:
5. DASYLIRION WHEELERI 'TEXANA' - SOTOL; (3); 5 GALLON, CONTAINER GROWN ONLY MIN. 20" TALL X 18" WIDE; VERY FULL — TYPICAL PLAN SYMBOL:
6. LEUCOPHYLLUM FRUTESCENS 'SILVERADO' - SILVERADO SAGE; (4); 5 GALLON CONTAINER GROWN; 15" TALL X 12" WIDE . — TYPICAL PLAN SYMBOL:
7. STIPA TENNUISSIMA - MEXICAN FEATHER GRASS; (85) 1 GALLON CONTAINER GROWN; MIN. 12" WIDE X 18" TALL; VERY FULL. — TYPICAL PLAN SYMBOL:
8. BOUTELOUA GRACILIMUS 'BLONDE AMBITION' - BLONDE AMBITION GRAMMA GRASS; (53) 1 GALLON; CONTAINER GROWN; 12" WIDE X 12" TALL — **TYPICAL PLAN SYMBOL:**
9. CAESALPINIA PULCHERRIMA - RED BIRD OF PARADISE; (10) 15 GALLON CONTAINER GROWN. **MIN. 24" TALL X 24" WIDE; VERY FULL** — TYPICAL PLAN SYMBOL:
10. 1/2" SCREENED DECOMPOSED GRANITE AREA; (5,028 SQ.FT. VERIFY) INSTALL OVER PERMEABLE GEOTEXTILE MIN. 3" DEEP. PROVIDE SUBMITTALS AND REFER TO SPECIFICATIONS. ALL BED AREAS UNLESS OTHERWISE NOTED. — TYPICAL PLAN SYMBOL:
11. BERMUDA SOD TURF; (1,057 SQ.FT. VERIFY) PROVIDE SUBMITTALS AND REFER TO SPECIFICATIONS. — **TYPICAL PLAN SYMBOL:**
12. **3-6" RIVER ROCK AT BASE OF DOWNSPOUTS (INSTALL AREA THAT IS MIN. 24" X 24" WITH GEOTEXTILE FABRIC UNDER ROCK). FABRIC SHALL NOT BE VISIBLE. INSTALL AT BASE OF ALL DOWNSPOUTS IN PLANTING AREAS.** — NOT SHOWN
13. **6" WIDE CONCRETE BED BORDER (125 LINEAR FT. VERIFY)**
14. EXISTING TREE TO REMAIN IN PLACE — TYPICAL PLAN SYMBOL:

GENERAL PLANTING NOTES:

A. SEE L-2.0 FOR IRRIGATION PLANS. NO SUBSTITUTIONS OR DEVIATIONS FROM THESE PLANS SHALL BE ALLOWED OR ACCEPTED WITHOUT WRITTEN CONSENT FROM THE LANDSCAPE ARCHITECT.

B. ALL PLANTING HOLES FOR SHRUBS SHALL BE DUG TO A MINIMUM DIMENSION OF 36" WIDE X 18" DEEP. MECHANICAL EXCAVATION OF THESE HOLES MAY BE NECESSARY.

C. ALL PLANTING HOLES FOR TREES SHALL BE DUG TO A MINIMUM DIMENSION OF 60" WIDE X 36" DEEP. MECHANICAL EXCAVATION OF THESE HOLES MAY BE NECESSARY.

D. TREE PLACEMENT WILL BE STAKED PRIOR TO INSTALLATION. NO TREES MAY BE PLANTED DIRECTLY ABOVE THE CITY WATER OR SEWER LINES. ADJUSTMENT SHALL BE MADE IN THE FIELD AS NECESSARY TO AVOID PLACEMENT ISSUES.

E. PLANTING SOIL SHALL ONLY BE REQUIRED FOR THE PLANTING WELL OF EACH TREE OR SHRUB.

CRITICAL NOTES:

1. PRIOR TO INSTALLATION, LANDSCAPE CONTRACTOR SHALL HAVE ALL PLANT AND TREE MATERIAL REVIEWED IN A LOCAL NURSERY/HOLDING AREA. LANDSCAPE ARCHITECT HAS THE RIGHT TO REJECT ANY/ALL PLANT, TREE, STONE, OR OTHER CONSTRUCTION MATERIALS IF HE FEELS THAT THEY DO NOT MEET THE INTENDED QUALITY OF THE PROJECT. IN SUCH CASE, ALL ASSOCIATED COST WITH ACQUIRING, SHIPPING, AND INSTALLING NEW MATERIAL SHALL SOLELY BE AT THE COST OF THE LANDSCAPE CONTRACTOR. THIS PRACTICE MAY BE REPEATED AS MANY TIMES AS NECESSARY IN ORDER TO ACHIEVE THE DESIRED QUALITY. THEREFORE, IT IS CRITICAL THAT THE LANDSCAPE CONTRACTOR PURCHASE AND PROVIDE HIGH-QUALITY MATERIAL UPON SUCCESSFUL BIDDING AND AWARD OF THE PROJECT.

2. PRIOR TO ANY DIGGING, CONTRACTOR SHALL CONTACT AND COORDINATE WITH 1-800-DIG-TESS, www.DIGTESS.COM, IN ORDER TO VERIFY EXISTENCE AND DETERMINE EXACT LOCATION OF ANY AND ALL KNOWN UNDERGROUND UTILITIES. CONTRACTOR SHALL NOT DIG PRIOR TO DIGTESS SITE RESULTS AND MARKINGS. ALL UNDERGROUND UTILITIES SHOWN IN THESE LANDSCAPE AND IRRIGATION PLAN SETS ARE TO BE CONSIDERED DIAGRAMMATIC AND GENERAL IN LOCATION PRIOR TO EXACT DETERMINATION BY DIGTESS AND OTHERS.

3. ALL QUANTITIES SHOWN ON THESE SEALED PLANS SHOULD BE FIELD VERIFIED BY THE CONTRACTOR PRIOR TO BIDDING. WHERE DISCREPANCIES ARISE, CONTRACTOR TO CONTACT THE LANDSCAPE ARCHITECT IMMEDIATELY FOR FURTHER DETERMINATION ON QUANTITIES TO BE PLACED IN THE FIELD.

4. ALL ELEMENTS OF THE LANDSCAPE PLANS SHALL MEET OR EXCEED TEXAS ACCESSIBILITY STANDARDS AS WELL AS STANDARDS SET FORTH BY THE AMERICANS WITH DISABILITIES ACT. THE CONTRACTOR SHALL FIELD VERIFY THAT ALL SLOPES, DISTANCES, OR OTHER MEASUREMENTS AND STANDARDS MEET STATE AND FEDERAL ACCESSIBILITY REQUIREMENTS. WHEN IT IS DETERMINED IN THE FIELD THAT CONDITIONS HAVE INFLUENCED THE CAPACITY OF THE DESIGN TO MEET THESE STANDARDS, THE CONTRACTOR SHALL IMMEDIATELY CONTACT THE LANDSCAPE ARCHITECT SO THAT A VIABLE SOLUTION CAN BE AGREED UPON. FAILURE TO DO SO MAY RESULT IN THE PROJECT NOT BEING ACCEPTED.

01 Landscape Plan

SCALE: 1" = 10'-0"

0 5 10 20

PROFESSIONAL SEAL

LOGO / CONTACT

KDCA associates
25 Years
-Established 1994-
Environmental Design + Planning Solutions

DESIGN TEAM

Architectural
Martinez Architects

Civil Engineer
Maverick Engineering

Structural
Matrix Structural Engineers

M/E/P/T
DBR

Landscape Architect
KDC Associates

FIRE STATION #5
CITY OF MIDLAND
2200 W GOLF COURSE RD
MIDLAND TEXAS 79701

PROJECT No: MA 18017

ISSUE

100% DESIGN DEVELOPMENT
22-MAY-2019

75% CONSTRUCTION DOCUMENTS
26-JUN-2019

ISSUE FOR PERMIT
30-JUL-2019

4.1236

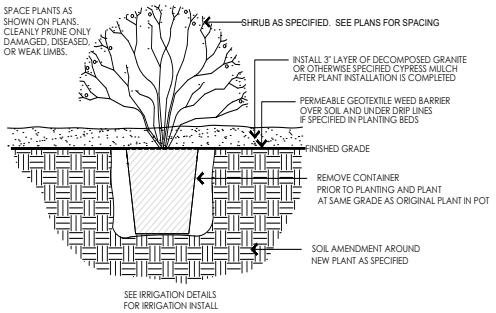

a Shrub Installation

Scale: NTS

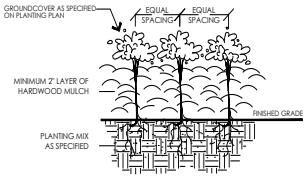

b Groundcover Installation

Scale: NTS

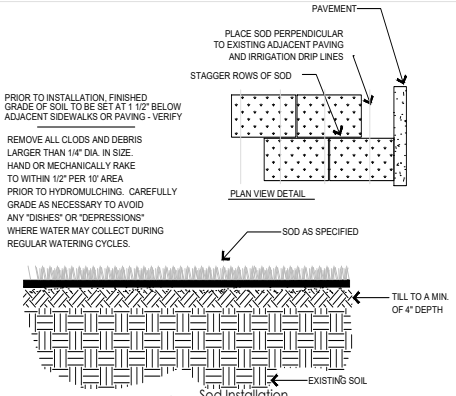

c Sod Installation

Scale: NTS

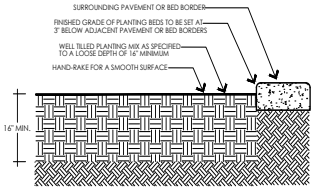

d Planting Bed Prep

Scale: NTS

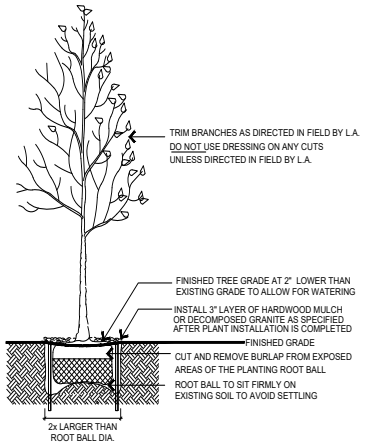

e Tree Installation

Scale: NTS

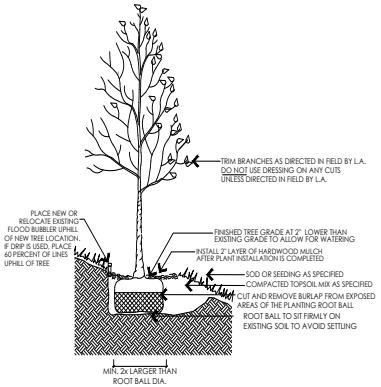

f Tree On Slope Installation

Scale: NTS

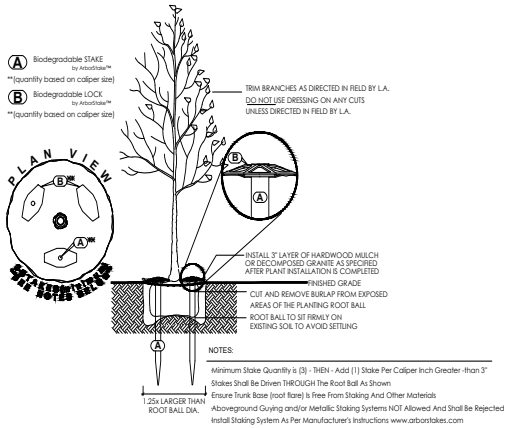

g Tree Staking

Scale: NTS

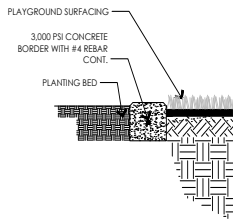

h Concrete Border

Scale: NTS

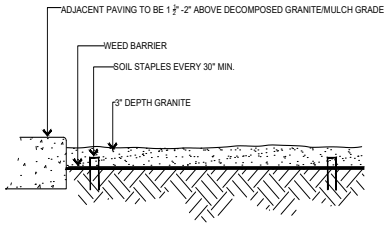

i Decomposed Granite Installation

Scale: NTS

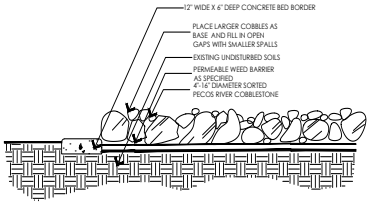

j Large Rock Installation

Scale: NTS

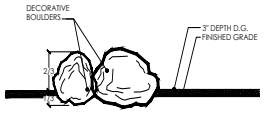

k Boulder Installation

Scale: NTS

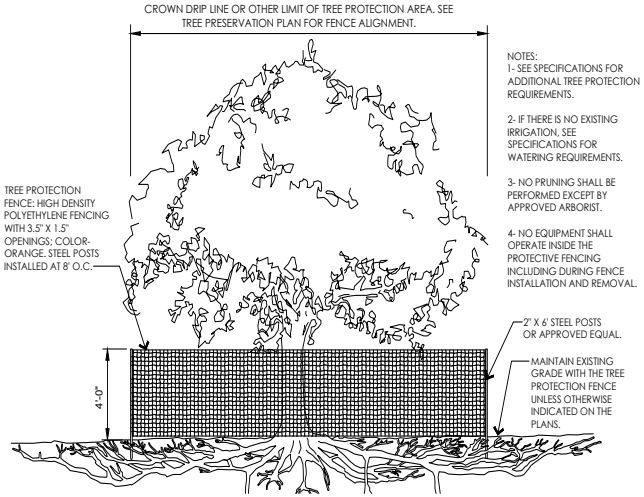

l Tree Protection Detail

Scale: NTS

4.1237

PROFESSIONAL SEAL

LOGO / CONTACT

KDCA associates
25 Years
-Established 1994-
Environmental Design + Planning Solutions
www.kdcaassociates.com 4400 N. Big Spring, Ste 205, Midland, Texas 79705 432.686.8001

DESIGN TEAM

Architectural
Martinez Architects

Civil Engineer
Maverick Engineering

Structural
Matrix Structural Engineers

M/E/P/T
DBR

Landscape Architect
KDC Associates

FIRE STATION #11

CITY OF MIDLAND
BRIARWOOD AVE. & GOLDEN GATE DR.
MIDLAND TEXAS 79701

PROJECT No: MA 18017

ISSUE

#	
	100% DESIGN DEVELOPMENT 22-MAY-2019
	75% CONSTRUCTION DOCUMENTS 26-JUN-2019
	ISSUE FOR PERMIT 30-JUL-2019

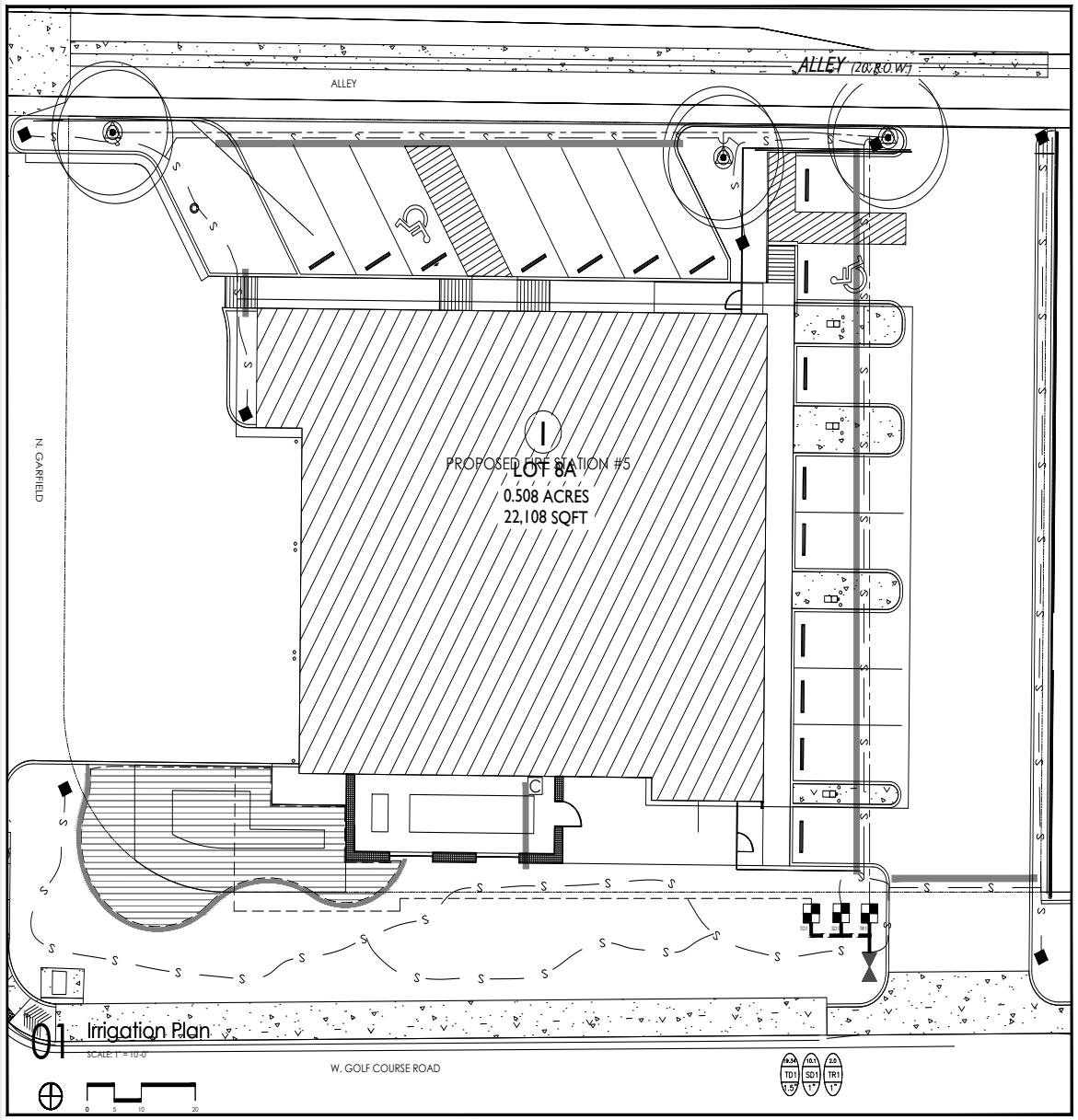

IRRIGATION KEY

SYMBOL	DESCRIPTION	SPECIFIED TYPE	REMARKS
	DRIP RING	TREE DRIP RING; NETAFIM TECHLINE	(45) .9 GPH EMITTERS
	DRIP VALVE ASSEMBLY	RAINBIRD XCZ DRIP VALVE ASSEMBLY W/ SCREEN FILTER AND PRESSURE REGULATOR	INSTALL PER MANUFACTURER'S SPECIFICATIONS; FOR TURF USE RAINBIRD XCZ-150-PRB-COM; FOR TREE & SHRUB USE RAINBIRD XCZ-100-PRBR DRIP VALV ASSEMBLY
	XERIBUG EMITTERS (NOT SHOWN)	RAINBIRD XERIBUG EMITTERS	SEE EMITTER SCHEDULE; INSTALL # SHOWN DIRECTLY INTO 1" DRIP LINE
	DRIP DISTRIBUTION TUBING	RAINBIRD XQ 1/4" DRIP TUBE	INSTALL BETWEEN EMITTER AND PLANT; MAX. RUN OF 8'
	BACKFLOW DEVICE	1-1/2" FEBCO 825 Y SERIES RPZ	INSTALL IN HOTBOX ON CONCRETE PEDESTAL
	PVC SLEEVE	2X DIAMETER OF PIPE	EXTEND BEYOND PAVEMENT
	SHRUB DRIP LINE	1" LANDSCAPE PRODUCTS DRIP LINE	LP1200 1" DRIP LINE BY LANDSCAPE PRODUCTS; INSTALL NO MORE THAN 8' FROM PLANT
	TURF DRIP AREA	NETAFIM TECHLINE	.9 GPH EMITTERS SPACED 12" X 12" ROW SPACING
	NEW 1-1/2" MAINLINE	PVC CL 200 SDR 21	1-1/2" CLASS 200 PVC MAINLINE
	TREE DRIP HEADER	CLASS 200 PVC SIZED AS SHOWN	PRIME ALL JOINTS. JOINTS 2' AND OVER SHOULD BE SANDED.
	TURF DRIP HEADER	CLASS 200 PVC SIZED AS SHOWN	PRIME ALL JOINTS. JOINTS 2' AND OVER SHOULD BE SANDED.
	FLUSH CAP	END LINE FLUSH CAP	INSTALL AT END OF EACH DRIP LINE
C	AUTOMATIC CONTROLLER	RAINBIRD ESP-ME	CONFIRM LOCATION W/ OWNER; INSTALL IN MECH. YARD

60.6 — GPM OF ZONE
20 — VALVE NUMBER
2" — VALVE SIZE
VALVE ID TAG

EMITTER SCHEDULE

PLANT	EMITTER GPH	# OF EMITTERS
RED YUCCA	.5 GPH	2
GOPHER PLANT	.5 GPH	2
BEAKED YUCCA	.5 GPH	1
SOTOL	.5 GPH	2
SILVERADO SAGE	2 GPH	5
MEXICAN FEATHER GRASS	1 GPH	3
BLONDE AMBITION GRAMMA	1 GPH	3
RED BIRD OF PARADISE	2 GPH	5

IRRIGATION NOTES:

1. IT IS THE CONTRACTOR'S RESPONSIBILITY TO REVIEW PLANS, SPECIFICATIONS AND THE CONSTRUCTION SITE TO BECOME FAMILIAR WITH THE PROJECT. CONTRACTOR IS TO CONTACT APPROPRIATE AUTHORITIES FOR LOCATING ALL UTILITIES PRIOR TO CONSTRUCTION. NOTIFY ONE-CALL AT 811 OR AT THE WEB SITE WWW.DIGTESS.ORG. PLANS AND SPECIFICATION WILL BE STRICTLY ADHERED TO. DURING INSTALLATION ROUTINE INSPECTION FOR COMPLIANCE WILL TAKE PLACE. NONCONFORMING WORK WILL BE REMOVED AND CORRECTED TO THE OWNER'S SATISFACTION.

2. IT IS SOLELY THE RESPONSIBILITY OF THE CONTRACTOR TO COMPLY WITH CITY, STATE AND LOCAL ORDINANCES, RULES, CODES AND PERMITTING PERTAINING TO THIS WORK. AS PER TCEQ REQUIREMENTS, A LICENSED IRRIGATOR OR AN IRRIGATION TECHNICIAN MUST BE ON-SITE DURING THE INSTALLATION OF THE IRRIGATION SYSTEM. LICENSED IRRIGATOR(S) WILL SUPERVISE AN IRRIGATION TECHNICIAN WHEN CONNECTING AN IRRIGATION SYSTEM TO A WATER SUPPLY OR INSTALLING, MAINTAINING, ALTERING, REPAIRING, OR SERVICING AN IRRIGATION SYSTEM, AND/OR SUPERVISE AN INSTALLER CONNECTING AN IRRIGATION SYSTEM TO A WATER SUPPLY.

3. VERIFY STATIC PRESSURE TO BE SUFFICIENT FOR SYSTEM PERFORMANCE. NOTIFY IRRIGATION DESIGNER IF PRESSURE IS LESS THAN REQUIRED BY THE DESIGN.

4. POINT OF CONNECTION WILL BE WATER METER AS SHOWN. VOLUME AND PRESSURE NOT AVAILABLE AT TIME OF DESIGN. VERIFY AND COORDINATE AS REQUIRED TO PROVIDE A FULLY AND PROPERLY FUNCTIONING SYSTEM.

5. IRRIGATION DRAWING IS A SCHEMATIC REPRESENTATION. ALL MAINLINE TIE-IN LOCATIONS AND LATERAL PIPING TO BE LOCATED IN PLANTING AREAS. WHERE PIPE MUST PASS BENEATH FLATWORK AND ROADWAYS, SLEEVES ARE TO BE PROVIDED AND STUBBED-UP AS DETAILED. ANY PIPE, HEADS, COMPONENTS, ETC SHOWN IN ASPHALT OR CONCRETE ARE SHOWN FOR CLARITY ONLY.

6. DRIP ZONE VALVES TO BE PRECEDED BY A LINE SIZED SPEARS SCHEDULE 80 ISOLATION VALVE. ALL ZONE VALVES TO BE INSTALLED IN RECTANGULAR VALVE BOXES AS NOTED. IT IS DESIRABLE TO INSTALL MULTIPLE VALVES IN A SINGLE VALVE BOX OF ADEQUATE SIZE ALLOWING FOR FUTURE ACCESS. A VALVE TAG WILL BE SECURED TO THE VALVE BOX LID, CHRISTY ID TAG OR EQUAL.

7. CONTROLLER IS A NEW RAINBIRD ESP-LXME CONTROLLER INSTALLED WALL OF MECHANICAL YARD. ALL LOW VOLTAGE WIRING TO BE SIZED AS NEEDED UF DIRECT BURY WIRE. WIRE CONNECTIONS TO BE MADE WITH DBYR 600V WATER PROOF CONNECTORS AT ALL SPLICES. PROVIDE A WIRE LOOP IN VALVE BOXES THAT WILL EXTEND A MINIMUM OF 36" ABOVE GRADE FOR ALL CONNECTIONS AND FUTURE CONNECTIONS. SEAL ALL LOOSE WIRE ENDS WITH SPECIFIED CONNECTORS. DBYR CONNECTORS ARE INTENDED FOR ONE TIME USE ONLY. SHOULD IT BE NECESSARY TO DISCONNECT A SPLICE, DISCARD CONNECTOR AND REPLACE WITH A NEW CONNECTOR. INSTALL WIRING BENEATH PIPE IN TRENCHES. TAPE WIRE TO THE UNDERSIDE OF THE MAINLINE ON 15' INTERVALS. WHERE WIRE MUST BE INSTALLED SEPARATE FROM THE MAINLINE INSTALL IN A 1" SCH 40 GRAY ELECTRICAL CONDUIT. FIELD SPLICES ARE DISCOURAGED OTHER THAN AT VALVES BUT WHERE THEY ARE UNAVOIDABLE AND PRE-APPROVED, INSTALL IN A 10" ROUND SPLICE BOX WITH A 36" ABOVE GRADE EXPANSION LOOP.

8. ALL MAINLINE PIPE DOWNSTREAM OF MAINLINE CONNECTIONS (EXCEPT WHERE NOTED ON THESE PLANS) AND LATERAL PIPE TO BE WHITE CLASS 200 PVC. ALL PIPE 3" AND SMALLER WILL BE SOLVENT WELD PIPE. SOLVENT WELD PVC PIPE AND FITTINGS PER MANUFACTURERS RECOMMENDATIONS. ALL PIPE AND FITTINGS TO BE PRIMED WITH PURPLE PRIMER WITHOUT EXCEPTION. FLOW VELOCITIES WILL GENERALLY DETERMINE PIPE SIZES. IN NO EVENT WILL THE FLOW VELOCITIES BE GREATER THAT 5 FPS. THE 5 FPS RULE IS SUPERSEDED BY ACTUAL PRESSURE LOSS CALCULATIONS. PRESSURE LOSS IN ANY ZONE WILL NOT BE GREATER THAN 10% OF THE RECOMMENDED OPERATING PRESSURE OF THE EMISSION DEVICE. PIPE SIZES WILL BE INCREASED TO COMPLY WITH THIS SPECIFICATION.

9. ALL SOLVENT WELD FITTINGS TO BE SCHEDULE 40, THREADED FITTINGS TO BE SCHEDULE 80. WHERE METAL FITTINGS OCCUR, ONLY SCHEDULE 80 MALE PVC THREADED INTO METAL FEMALE PIPE FITTINGS AND/OR GLASS-FILLED NYLON VALVES WILL BE ACCEPTED. CLOSE BY CLOSE SOLVENT WELDING OF FITTINGS WILL NOT BE ALLOWED. ALL FITTINGS WILL BE JOINED BY SUFFICIENT PIPE LENGTHS ALLOWING FUTURE REPAIRS AND/OR MODIFICATIONS.

10. SOLVENT WELD PIPE CONNECTION WILL BE MADE WITH APPROVED GLUE & PRIMER ONLY. PRIMER WITH PIGMENTATION WILL BE USED ON ALL SOLVENT WELD CONNECTIONS. WELD-ON P68 OR P70 PURPLE PRIMER. GLUE WILL BE WELD-ON 710 FOR PIPE UP TO 2". WELD-ON 705 OR 795 FOR PIPE UP TO 4". APPLY CEMENT TO PIPE SPIGOT FIRST, THEN TO FITTING TO AVOID EXCESS CEMENT BUILDUP INTERIOR TO FITTING AND PIPE. TWIST PIPE ¼ TURN. HOLD IN PLACE FOR 30 SECONDS AND WIPE EXCESS CEMENT FROM EXTERIOR SURFACES. GLUE AND CLEANER WILL BE SUBMITTAL ITEMS. SOLVENT WELDING OF PIPE IN WET CONDITIONS AND/OR IF THE OUTSIDE AMBIENT AIR TEMPERATURE FALLS BELOW THE MANUFACTURERS RECOMMENDED THRESHOLD, SHALL NOT OCCUR UNLESS DIRECTED BY THE IRRIGATION DESIGNER. FOR PROPER SOLVENT WELDING OF PIPE AND FITTINGS, CEMENT APPLICATOR MUST BE NO LESS THAN HALF THE SIZE OF THE PIPE.

11. MAINLINE PIPING WILL BE FLUSHED PRIOR TO INSTALLING CONTROL VALVES. LATERAL PIPING WILL BE FLUSHED PRIOR TO INSTALLING NOZZLES. DRIP IRRIGATION WILL BE THOROUGHLY FLUSHED PRIOR TO INSTALLING FLUSH AND AIR RELIEF VALVES. WITH WATER RUNNING BEGIN CLOSEST TO THE ZONE VALVE INSTALLING NOZZLES OR DRIP FLUSH AND AIR VALVES. THE MOST DISTANT DEVICE ON THE ZONE WILL BE THE LAST DEVICE INSTALLED.

12. SEE DETAILS FOR REQUIRED PIPE AND VALVE DEPTHS. PIPE AND WIRING WILL BE INITIALLY COVERED WITH A 6" MINIMUM OF FINE MATERIAL FROM EXCAVATIONS. IMPORT FILL MATERIAL IF EXCAVATIONS ARE NOT SUITABLE FOR COVERING AND BACKFILLING OF ALL TRENCHES. ROCKS OR OTHER OBJECTS GREATER THAN 3/4" IN DIAMETER WILL NOT BE ALLOWED IN CONTACT WITH PIPE OR WIRING.

13. THE INTENT OF DRAWINGS IS TO PROVIDE 100% PLUS COVERAGE FOR ALL PLANT MATERIALS. SPRINKLER HEAD LOCATIONS MAY REQUIRE MODIFICATION DUE TO CHANGES IN THE SITE, DESIGN DEFICIENCIES, OR OTHER CHANGES UNFORESEEN AT THE TIME OF DESIGN. FINAL HEAD PLACEMENT AND COVERAGE WILL BE APPROVED BY THE IRRIGATION DESIGNER. CONTRACTOR IS RESPONSIBLE FOR ACHIEVING 100% COVERAGE OF THE IRRIGATION SYSTEM AS SHOWN ON THE FOLLOWING SHEETS. IF ALTERATIONS OR MODIFICATIONS ARE REQUIRED TO ACHIEVE 100% COVERAGE, IT SHALL BE BROUGHT TO THE ATTENTION OF, AND THE NEW LAYOUT STAKED, THE OWNER'S REPRESENTATIVE AND/OR THE IRRIGATION DESIGNER FOR APPROVAL.

14. A FINAL SCALED AS-BUILT DRAWING WILL BE FURNISHED BY THE CONTRACTOR UPON COMPLETION OF THE PROJECT AND PRIOR TO FINAL PAYMENT. ACCURATE RED LINE AS BUILDS WILL BE MAINTAINED IN THE CONSTRUCTION OFFICE UPDATED NO LESS THAN EVERY SEVEN DAYS. ITEMS TO DOCUMENT INCLUDE MAINLINE, WIRE PATH DRAWN SCHEMATICALLY, VALVES, ISOLATION VALVES, SPLICE BOXES AND ANY EQUIPMENT INCORPORATED INTO THE WORK THAT MAY NEED TO BE LOCATED AT A FUTURE TIME. EACH ITEM WILL HAVE TWO MEASUREMENTS FROM FIXED OBJECTS. OBJECTS WILL BE PERMANENT FEATURES AND WILL OCCUR AT DIFFERING ANGLES FROM THE DEVICE.

16. SUBMITTALS WILL BE REQUIRED FOR PRE-APPROVAL OF ALL MATERIALS TO BE INCORPORATED INTO THE IRRIGATION SYSTEM. IN THE EVENT THAT MORE THAN ONE PRODUCT MAY BE USED (I.E. PIPE AND FITTINGS), SUBMIT EACH FOR APPROVAL. MATERIALS NOT SUBMITTED WILL BE REMOVED FROM THE SITE AT THE COST OF THE CONTRACTOR AND AT NO COST TO THE OWNER.

17. THE UNDERGROUND IRRIGATION SYSTEM SHALL BE GUARANTEED AGAINST DEFECTS IN MATERIALS AND WORKMANSHIP FOR ONE YEAR FOLLOWING FINAL ACCEPTANCE OF THE WORK.

TURF DRIP VALVE SCHEDULE

NUMBER	MODEL	SIZE	GPM
TD1	TURF DRIP	1.5"	19.34

SHRUB DRIP VALVE SCHEDULE

NUMBER	MODEL	SIZE	GPM
SD1	SHRUB DRIP	1"	10.1

TREE DRIP VALVE SCHEDULE

NUMBER	MODEL	SIZE	GPM
TR1	TREE DRIP	1"	2

4.1238

PROFESSIONAL SEAL

LOGO / CONTACT

KDCA associates
25 Years
-Established 1994-
Environmental Design + Planning Solutions

DESIGN TEAM

Architectural
Martinez Architects

Civil Engineer
Maverick Engineering

Structural
Matrix Structural Engineers

M/E/P/T
DBR

Landscape Architect
KDC Associates

FIRE STATION #11
CITY OF MIDLAND
BRIARWOOD AVE. & GOLDEN GATE DR.
MIDLAND TEXAS 79701

PROJECT No: MA 18017

ISSUE
100% DESIGN DEVELOPMENT 22-MAY-2019
75% CONSTRUCTION DOCUMENTS 26-JUN-2019
ISSUE FOR PERMIT 30-JUL-2019

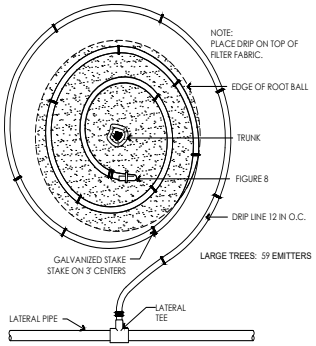

a Tree Drip Ring

Scale: NTS

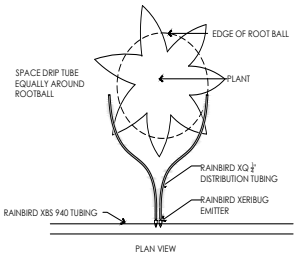

b Shrub Drip

Scale: NTS

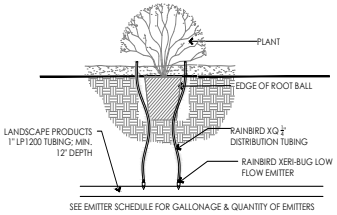

c Shrub Drip

Scale: NTS

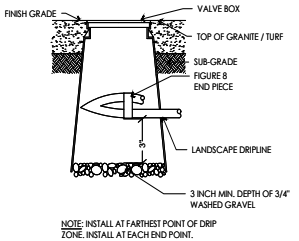

d Drip Flush

Scale: NTS

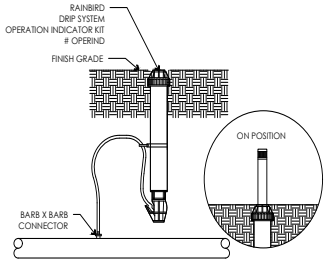

e Drip Zone Indicator

Scale: NTS

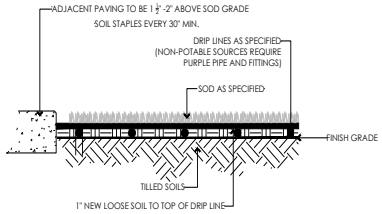

f Turf Drip Installation

Scale: NTS

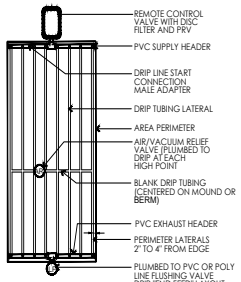

g Turf Drip Layout

Scale: NTS

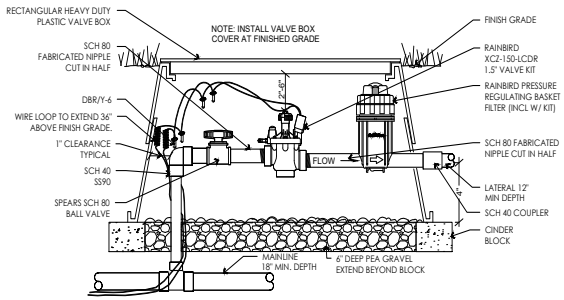

h Drip Valve Installation

Scale: NTS

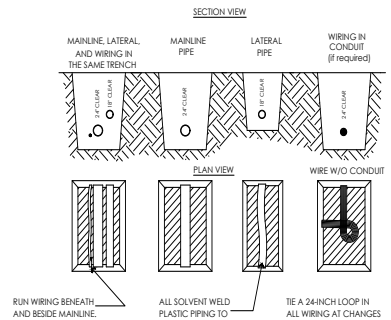

i Trenching Details/Pipe Depths

Scale: NTS

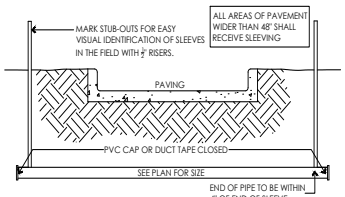

j Pipe Sleeving

Scale: NTS

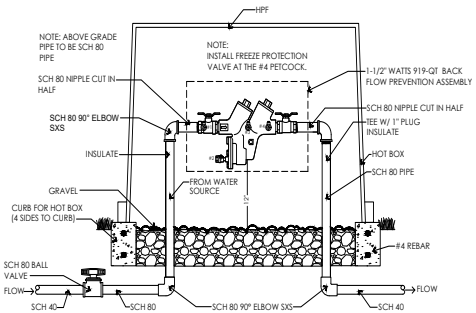

k Backflow

Scale: NTS

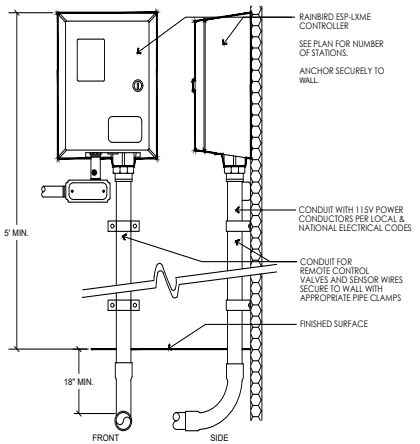

l Automatic Controller

Scale: NTS

4.1239

PROFESSIONAL SEAL

LOGO / CONTACT

KDCA associates
25 Years
-Established 1994-
Environmental Design + Planning Solutions
www.kdcaassociates.com 4400 N. Big Spring, Ste 200, Midland, Texas 79705 432-686-8001

DESIGN TEAM

Architectural
Martinez Architects

Civil Engineer
Maverick Engineering

Structural
Matrix Structural Engineers

M/E/P/T
DBR

Landscape Architect
KDC Associates

FIRE STATION #11

CITY OF MIDLAND
BRIARWOOD AVE. & GOLDEN GATE DR.
MIDLAND TEXAS 79701

PROJECT No: MA 18017

ISSUE

100% DESIGN DEVELOPMENT	22-MAY-2019
75% CONSTRUCTION DOCUMENTS	26-JUN-2019
ISSUE FOR PERMIT	30-JUL-2019

PROPERTY DATA

OWNER:	CITY OF MIDLAND	BUILDING HEIGHT: 36' - 6 3/4"
PROPERTY INFORMATION:		NO. OF STORIES: 2
ADDRESS:	2210 W Golf Course Rd MIDLAND, TX 79701	PARKING REQUIREMENTS:
		PARKING REQUIRED BY CODE: 12
ACREAGE:	0.51 ACRES	PARKING PROVIDED: 16
BUILDING AREA:	6,587 GSF	
LEVEL 1 AREA:	6,587 GSF	
LEVEL 2 AREA:	5,186 GSF	
BUILDING PERIMETER:	345'	

SITE PLAN LEGEND

- PROPERTY BOUNDARIES
- EASEMENT
- PROPOSED FENCE LINE

SITE PLAN KEYED NOTES

1. EMERGENCY GENERATOR - RE: M/E/P DRAWINGS
2. CONCRETE WHEEL STOP RE: 2/A102
3. CONCRETE PAD FOR GENERATOR - RE: ELEC
4. CONCRETE PAVING (RE: CIVIL DRAWINGS); RE: JOINT DETAILS 5 THRU 8 ON SHEET A/102
5. YELLOW PAINTED PARKING LOT STRIPES (4" X 20' LONG @ PARKING STALLS, SPACED 9'-0" O.C & 4" STRIPES SPACED 36" O.C. @ DIAGONALLY STRIPED)
6. PAINT ACCESSIBILITY LOGO - RE: DETAIL 1/A102
7. A.D.A. APPROVED HANDICAP RESERVED PARKING SIGN-PROVIDE 1 SIGN BELOW ALL HC SPACES STATING: "$50 - $200 FINE WITHOUT VEHICLE PERMIT. ALL VAN ACCESSIBLE STALLS SHALL BE PROVIDED WITH ADDITIONAL SIGNAGE STATING: "VAN ACCESSIBLE" - RE: 15/A102
8. HANDICAP-ACCESSIBLE CURB RAMP - RE: 3/A102
9. CONCRETE-FILLED STEEL PIPE BOLLARDS - RE: 4/A102

SITE PLAN KEYED NOTES

10. EXISTING TREES (PROTECT DURING CONSTRUCTION)
11. EXISTING TREE TO BE CUT DOWN
12. EXCERCISE PAD
13. EXISTING FENCE
14. PRE FIN. MTL DOWNSPOUT
15. CONCRETE SIDEWALK - RE: 10/A102 & CIVIL DRAWINGS
16. WOOD FENCE ENCLOSURE
17. FLAG POLE - RE: 12/A102. PROVIDE FLAG POLE LIGHTING PER ELEC. DWGS.
18. COMMUNICATION TOWER
19. CHAIN LINK FENCE
20. MAILBOX

GENERAL NOTES

1. PAINT/MARK FIRE LANE AS REQUIRED (RE: PLAN AND NOTES ON SHEET G004 FOR EXTENT AND REQUIREMENTS OF MARKINGS).
2. INSTALL 6" CONCRETE CURBS AT ALL DRIVES, PARKING, ETC. AT VEHICULAR TRAFFIC AREAS, TYP. (RE: 9/A102)
3. DIMENSIONS TO BACK OF CURB. RE: CIVIL FOR ADDITIONAL SITE WORK DIMENSIONS.
4. 2% MAX. CROSS SLOPE @ ALL CROSSWALKS. ACCESSIBLE ROUTES OF TRAVEL AROUND SITE & AT ALL PASSENGER LOADING/UNLOADING AREAS
5. G.C. TO SUBMIT SIDEWALK JT. LAYOUT FOR ARCHITECTS APPROVAL. EXPANSION JTS. @ 20'-0" O.C. MAX. SIDEWALKS 4-1/2" CONC. ON 2" SANDBED W/ 6X6 #6 WWF. (RE: CIVIL)
6. CONTRACTOR TO PRELIMINARILY LAY-OUT BUILDING. ONCE LAID OUT, REVIEW WITH ARCHITECT BEFORE PROCEEDING. COORD. ALL DIMENSIONS & REVIEW ANY DISCREPANCIES BEFORE STARTING WORK
7. MAX. DROP AT ALL EXTERIOR DOORS INCLUDING THRESHOLD SHALL BE BETWEEN 1/4" TO 1/2" MAX. (TYP)
8. PAINT ALL OUTDOOR CONDENSER WATER PIPING/GV/ALVES
9. G.C. TO COORDINATE & ENSURE ALL REQ'D. UTILITIES ARE PROVIDED & FUNCTIONING PRIOR TO CONNECTION. G.C. SHALL BE SOLELY RESPONSIBLE FOR FILING ALL DOCUMENTS & NOTIFICATION OF ALL AGENCIES NECESSARY FOR CONNECTION AND/OR INSTALLATION OF SAID SERVICES
10. CONTRACTOR SHALL USE LINE LOCATOR SERVICE BEFORE BEGINNING TRENCHING OR DIGGING WHEN U.G. UTILITIES ARE SUSPECTED. CONTRACTOR SHALL REPAIR ALL UTILITIES DAMAGED
11. RE: SOIL REPORT FOR ALL FILL REQUIREMENTS
12. RE: CIVIL FOR EROSION CONTROL
13. RE: LANDSCAPING / IRRIGATION DRAWINGS FOR LANDSCAPE REQUIREMENTS.
14. G.C. TO COORDINATE OFFSITE UTILITIES INCLUDING:
    - 14.1 DOMESTIC WATER LINE - RE: CIVIL AND PLUMBING
    - 14.2 FIRE WATER LINE - RE:CIVIL AND PLUMBING
    - 14.3 SANITARY SEWER - RE: CIVIL AND PLUMBING
    - 14.4 ELECTRICAL - RE: ELECTRICAL
    - 14.5 NATURAL GAS - RE: PLUMBING
15. G.C. SHALL BE RESPONSIBLE TO COORDINATE CLEARING PLAN APPROVAL WITH OWNER AND ARCHITECT PRIOR TO CONSTRUCTION
16. COORDINATE WITH OWNER AND ARCHITECT FOR TREES TO REMAIN/ AREA TO REMAIN UNDISTURBED PRIOR TO CONSTRUCTION

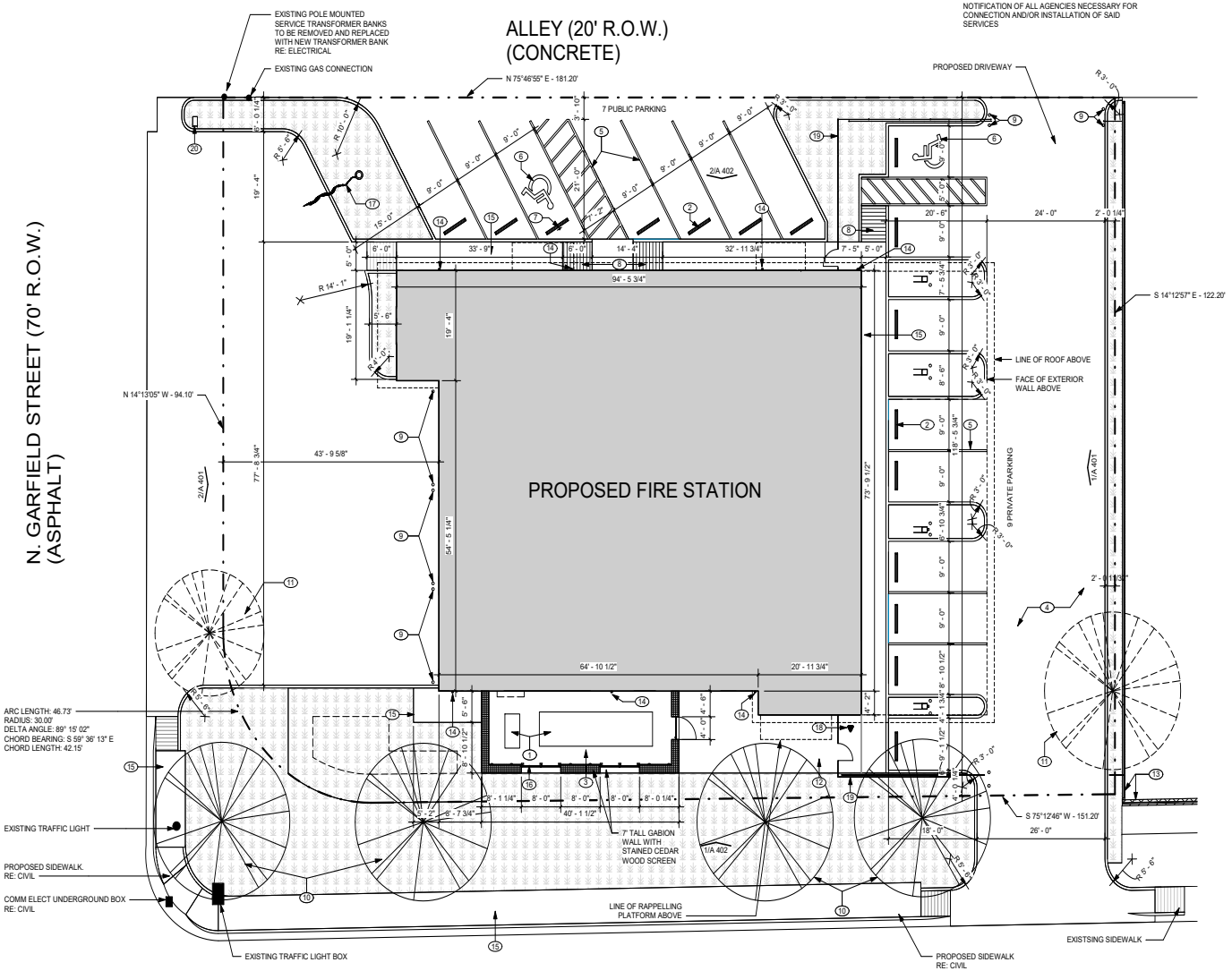

01 SITE PLAN
SCALE: 3/32" = 1'-0"

PROFESSIONAL SEAL

REGISTERED ARCHITECT JUSTIN E. MYERS 24840 STATE OF TEXAS

LOGO/CONTACT

martinez ARCHITECTS

Martinez Architect, LP
900 Rockmead, Suite 250
Houston, Texas 77339
281.346.7371

DESIGN TEAM

Architectural
Martinez Architects

Civil Engineer
Maverick Engineering

Structural
Matrix Structural Engineers

M/E/P/T
DBR

Landscape Architect
KDC Associates

FIRE STATION #5

CITY OF MIDLAND
2210 W GOLF COURSE RD
MIDLAND, TX 79701

PROJECT No: MA 18017
DATE: 16-JAN-2020

ISSUE

75% CONSTRUCTION DOCUMENT 26-JUN-2019
100% ISSUE FOR PERMIT 30-JUL-2019
100% ISSUE FOR APPROVAL TO BID 16-JAN-2020

ARCHITECTURE SITE PLAN

A 101

4.1240

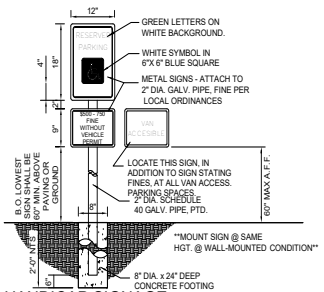

15 HANDICAP SIGNAGE
SCALE: 3/4" = 1'-0"

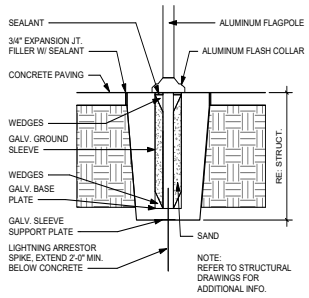

12 FLAG POLE
SCALE: N.T.S.

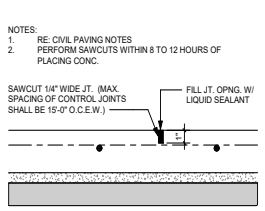

8 CONTROL JOINT
SCALE: 1 1/2" = 1'-0"

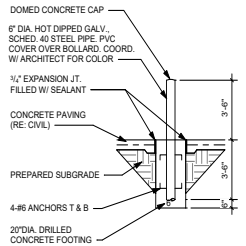

4 PIPE BOLLARD
SCALE: N.T.S.

PROJECT SIGN NOTES:

1. CONTRACTOR SHALL VERIFY SITE MOUNTING LOCATION WITH ARCHITECT.
2. SIGN TO BE 3/16" PLYWOOD ON 4x CONSTRUCTION. FOOTINGS TO BE 12" x 3'-0" CONCRETE.
3. COLORS:
   GRAY BACKGROUND --
   RGB COLOR 215,215,215 (PANTONE COOL GRAY 1C)
   BLACK LETTERS --
   RGB COLOR 60,60,60 (PANTONE BLACK 7C)
   BLACK 1" BORDER AT PERIMETER & 1/2" INTERIOR LINES --
   RGB COLOR 60,60,60 (PANTONE BLACK 7C)
4. TEXT TYPE - ARIAL BALTIC

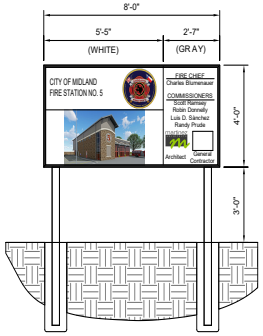

14 PROJECT SIGN
SCALE: 3/8" = 1'-0"

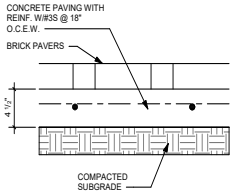

11 BRICK PAVERS
SCALE: N.T.S.

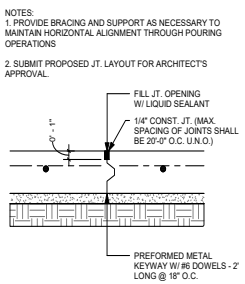

7 CONSTRUCTION JOINT
SCALE: 1 1/2" = 1'-0"

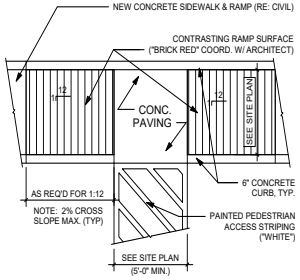

3 HANDICAP RAMP
SCALE: N.T.S.

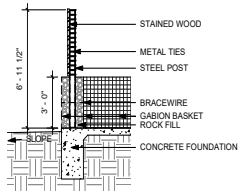

17 GABION WALL DETAIL
SCALE: 1/4" = 1'-0"

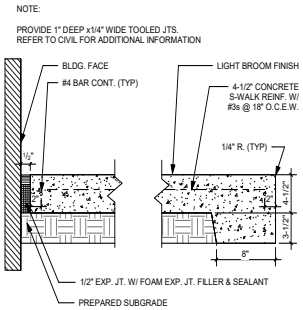

10 TYPICAL SIDEWALK
SCALE: N.T.S.

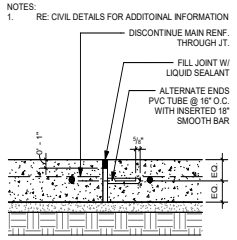

6 EXPANSION JOINT
SCALE: 1 1/2" = 1'-0"

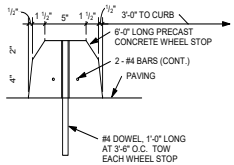

2 WHEEL STOP
SCALE: N.T.S.

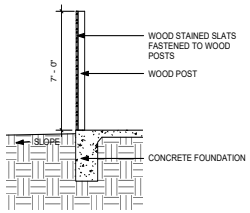

16 GABION WALL DETAIL
SCALE: 1/4" = 1'-0"

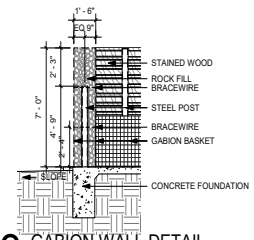

13 GABION WALL DETAIL
SCALE: 1/4" = 1'-0"

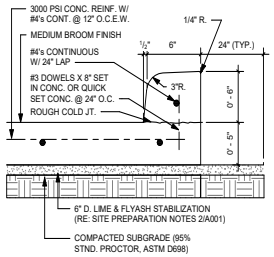

9 CURB DETAIL
SCALE: 1 1/2" = 1'-0"

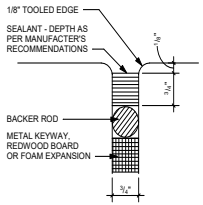

5 PAVING JOINT
SCALE: 1 1/2" = 1'-0"

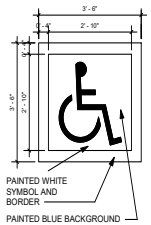

NOTE: SYMBOL SHALL BE CENTERED ON WIDTH OF PARKING SPACE AND AT DRIVE EDGE OF SPACE.

1 H.C. MARKING
SCALE: N.T.S.

PROFESSIONAL SEAL

REGISTERED ARCHITECT JUSTIN E. MYERS 24640 STATE OF TEXAS

LOGO/CONTACT

martinez ARCHITECTS

Martinez Architect, LP
900 Rockmead, Suite 250
Houston, Texas 77339
281.346.7371

DESIGN TEAM

Architectural
Martinez Architects

Civil Engineer
Maverick Engineering

Structural
Matrix Structural Engineers

M/E/P/T
DBR

Landscape Architect
KDC Associates

FIRE STATION #5
CITY OF MIDLAND
2210 W GOLF COURSE RD
MIDLAND, TX 79701

PROJECT No: **MA 18017**
DATE: **16-JAN-2020**

ISSUE
75% CONSTRUCTION DOCUMENT 26-JUN-2019
100% ISSUE FOR PERMIT 30-JUL-2019
100% ISSUE FOR APPROVAL TO BID 16-JAN-2020

SITE DETAILS

A 102

4.1241

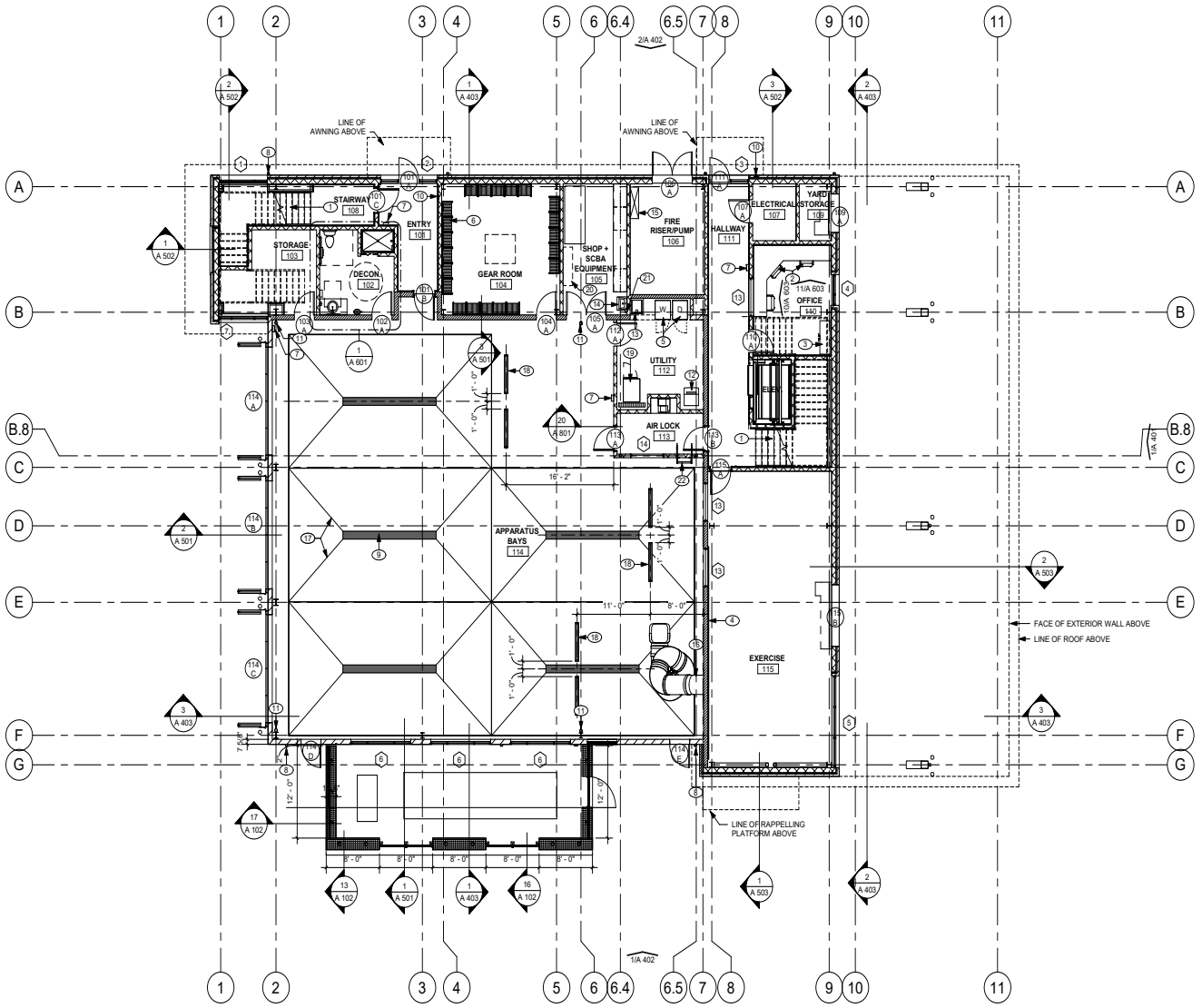

GENERAL NOTES

A. SEE SHEET A204 FOR PARTITION TYPES.
B. BRACE ALL STUD WALLS BACK TO STRUCTURE AS REQ'D. STUD MANUFACTURER SHALL GAUGE ALL STUDS PER APPLICATION. SUBMIT ENGINEERED SHOP DRAWINGS FOR APPROVAL.
C. EXTEND & SEAL ALL FIRE RATED WALLS TO DECK. ENSURE AIR-TIGHT SEAL @ ALL EXTERIOR WALLS.
D. COMPLETELY FILL ALL EXTERIOR WALLS WITH INSULATION.
E. CONTRACTOR TO PROVIDE & INSTALL FIRE DEPARTMENT ACCESS BOX. COORDINATE BOX REQUIREMENTS AND MOUNTING LOCATION WITH FIRE MARSHAL PRIOR TO INSTALLATION. APPLICATION & APPROVAL REQ'D.
F. PROVIDE GROMMETS AT ALL CASEWORK KNEE SPACES.
G. ALL MATERIALS TESTING BY ALLOWANCE.
H. TESTING AND BALANCING OF MECHANICAL SYSTEMS SHALL BE PART OF BASE BID.
I. ALL BASE CABINET FILE DRAWERS TO BE CONSTRUCTED WITH PROPER WIDTH/DEPTH SO AS TO HOUSE FILING SYSTEM WITH SIDE RAILS TO ACCEPT HANGING FILE SYSTEM. SUBMIT DRAWER MOCKUP FOR ARCHITECT'S REVIEW AND APPROVAL PRIOR TO CONSTRUCTION/ INSTALLATION.
J. SUBSTITUTE DUROCK CEMENT BOARD FOR GYPSUM BOARD @ ALL CERAMIC WALL TILE LOCATIONS.
K. 60" H. PLASTIC CORNER GUARDS TO BE PROVIDED AT ALL GYP. BD. CORNERS EXCEPT THOSE AT COLUMN FURROUTS.
L. CONTRACTOR SHALL COORDINATE THE LOCATION OF ALL ELECTRICAL DEVICES & PLUMBING WITH MILLWORK, LOCKERS, ETC. ALL ELECTRICAL DEVICES & PLUMBING NOT COORDINATED WITH MILLWORK, LOCKERS, ETC. SHALL BE RELOCATED BY THE CONTRACTOR.
M. REFER TO SHEET G001 FOR TYPICAL CLEARANCES AT DOORS. ALL DOORS SHALL MEET THE REQUIREMENTS OF THIS DRAWING. IF A DOOR IS FOUND THAT DOES NOT MEET THESE REQUIREMENTS, CONTACT THE ARCHITECT PRIOR TO CONSTRUCTION.
N. PROVIDE WOOD BLOCKING IN WALLS AS REQUIRED AT ALL HANDRAILS, MILLWORK, EQUIPMENT, ETC. - VERIFY LOCATION OF ALL OWNER PROVIDED EQUIPMENT THAT WILL REQUIRE BLOCKING.
O. SLOPE AT FLOOR DRAINS SHALL NOT EXCEED 1:48 SLOPE IN AREAS OF ACCESSIBLE PATH OF TRAVEL.

WALL LEGEND

1-HR FIRE RATED WALL TO DECK - SEALED: RE TO G002

FLOOR PLAN KEYED NOTES

1 METAL STAIR
2 OFFICE FURNITURE (O.F.C.I.). CONTRACTOR TO COORDINATE AND PROVIDE BLOCKING IN WALL AS REQUIRED TO ADEQUATELY SUPPORT FURNITURE.
3 MEDICAL CABINET & SHELVING (RE: 18/A602)
4 4' HIGH X FULL LENGTH WALL MIRROR @ 30" A.F.F.
5 COMMERCIAL WASHER/ DRYER BY OWNER G.C. INSTALL
6 WALL MOUNTED GEAR GRID LOCKERS
7 FIRE EXTINGUISHER IN CABINET AT DRYWALL LOCATIONS, AND SURFACE MOUNTED AT CMU LOCATIONS
8 PRE FIN. MTL DOWNSPOUT
9 TRENCH DRAIN (RE: PLUMBING)
10 CALLBOX
11 ROPE HOOK
12 ICE MACHINE BY OWNER G.C. TO INSTALL
13 MOP SINK
14 WALL-MOUNTED SINK
15 REVERSE-OSMOSIS
16 COMMERCIAL SLIDE
17 SLOPED CONC. FLOOR RE: STRUCT
18 CONCRETE WHEEL STOP RE: 2/A102
19 DEXTER T-600 WASHER
20 TANK STORAGE
21 WALL-MOUNTED LIQUID SOAP DISPENSER
22 FIXED LADDER

TRUE NORTH
PROJECT NORTH

1 LEVEL 1
SCALE: 1/8" = 1'-0"

PROFESSIONAL SEAL

REGISTERED ARCHITECT JUSTIN E. MYERS 24640 STATE OF TEXAS

LOGO/CONTACT

martinez ARCHITECTS

Martinez Architect, LP
900 Rockmead, Suite 250
Houston, Texas 77339
281.346.7371

DESIGN TEAM

Architectural
Martinez Architects

Civil Engineer
Maverick Engineering

Structural
Matrix Structural Engineers

M/E/P/T
DBR

Landscape Architect
KDC Associates

FIRE STATION #5

CITY OF MIDLAND
2210 W GOLF COURSE RD
MIDLAND, TX 79701

PROJECT No: MA 18017
DATE: 16-JAN-2020

ISSUE
75% CONSTRUCTION DOCUMENT 26-JUN-2019
100% ISSUE FOR PERMIT 30-JUL-2019
100% ISSUE FOR APPROVAL TO BID 16-JAN-2020

LEVEL 1

A 201

4.1242

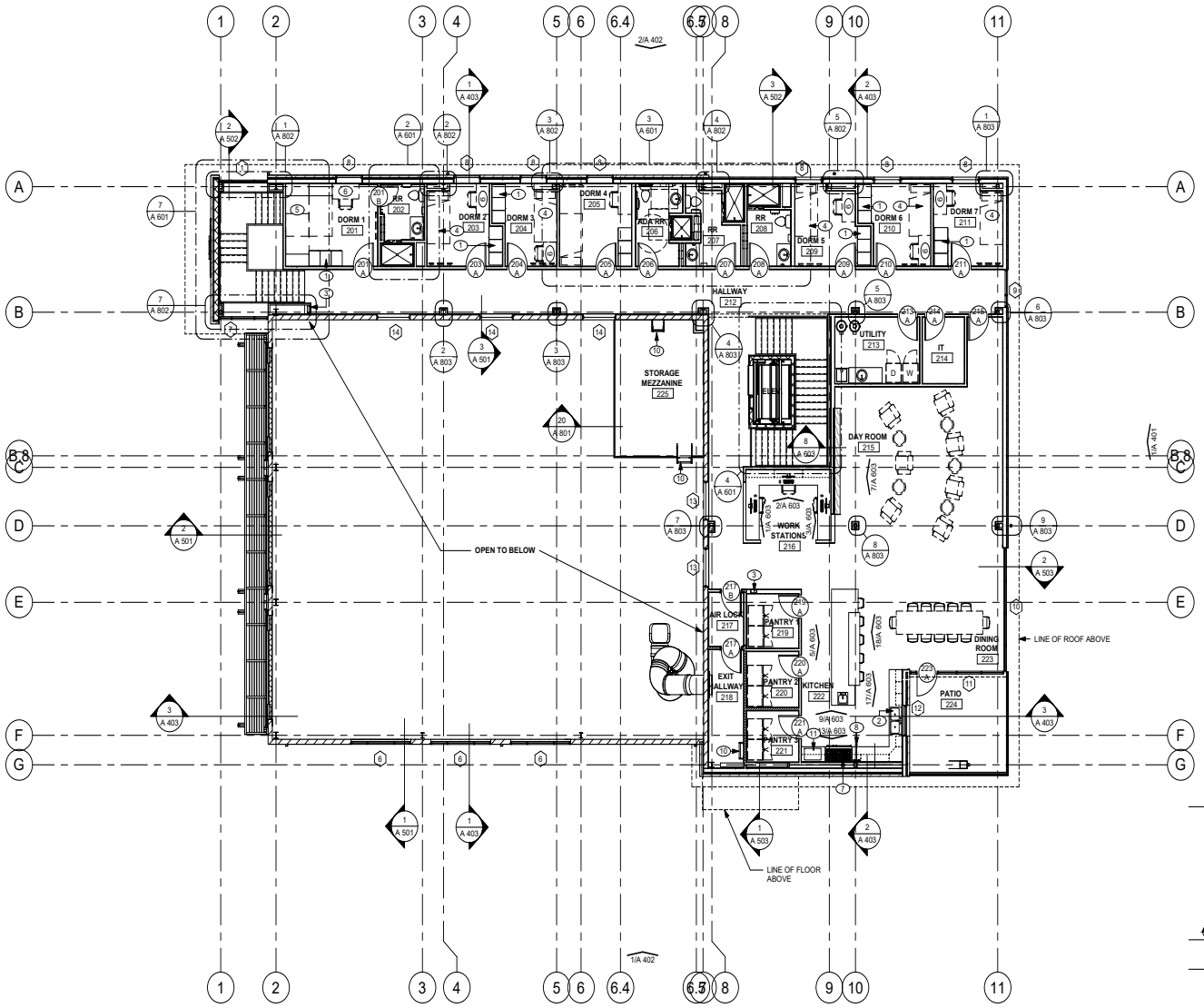

2 LEVEL 2
SCALE: 1/8" = 1'-0"

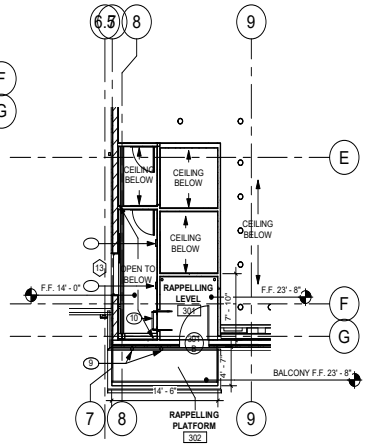

1 RAPPELLING LEVEL
SCALE: 1/8" = 1'-0"

TRUE NORTH PROJECT NORTH

GENERAL NOTES

A. SEE SHEET A204 FOR PARTITION TYPES.
B. BRACE ALL STUD WALLS BACK TO STRUCTURE AS REQ'D. STUD MANUFACTURER SHALL GAUGE ALL STUDS PER APPLICATION. SUBMIT ENGINEERED SHOP DRAWINGS FOR APPROVAL.
C. EXTEND & SEAL ALL FIRE RATED WALLS TO DECK. ENSURE AIR-TIGHT SEAL @ ALL EXTERIOR WALLS.
D. COMPLETELY FILL ALL EXTERIOR WALLS WITH INSULATION.
E. CONTRACTOR TO PROVIDE & INSTALL FIRE DEPARTMENT ACCESS BOX. COORDINATE BOX REQUIREMENTS AND MOUNTING LOCATION WITH FIRE MARSHAL PRIOR TO INSTALLATION. APPLICATION & APPROVAL REQ'D.
F. PROVIDE GROMMETS AT ALL CASEWORK KNEE SPACES.
G. ALL MATERIALS TESTING BY ALLOWANCE.
H. TESTING AND BALANCING OF MECHANICAL SYSTEMS SHALL BE PART OF BASE BID.
I. ALL BASE CABINET FILE DRAWERS TO BE CONSTRUCTED WITH PROPER WIDTH/DEPTH SO AS TO HOUSE FILING SYSTEM WITH SIDE RAILS TO ACCEPT HANGING FILE SYSTEM. SUBMIT DRAWER MOCKUP FOR ARCHITECT'S REVIEW AND APPROVAL PRIOR TO CONSTRUCTION/ INSTALLATION.
J. SUBSTITUTE DUROCK CEMENT BOARD FOR GYPSUM BOARD @ ALL CERAMIC WALL TILE LOCATIONS.
K. 60" H. PLASTIC CORNER GUARDS TO BE PROVIDED AT ALL GYP. BD. CORNERS EXCEPT THOSE AT COLUMN FURROUTS.
L. CONTRACTOR SHALL COORDINATE THE LOCATION OF ALL ELECTRICAL DEVICES & PLUMBING WITH MILLWORK, LOCKERS, ETC. ALL ELECTRICAL DEVICES & PLUMBING NOT COORDINATED WITH MILLWORK, LOCKERS, ETC. SHALL BE RELOCATED BY THE CONTRACTOR.
M. REFER TO SHEET G001 FOR TYPICAL CLEARANCES AT DOORS. ALL DOORS SHALL MEET THE REQUIREMENTS OF THIS DRAWING. IF A DOOR IS FOUND THAT DOES NOT MEET THESE REQUIREMENTS, CONTACT THE ARCHITECT PRIOR TO CONSTRUCTION.
N. PROVIDE WOOD BLOCKING IN WALLS AS REQUIRED AT ALL HANDRAILS, MILLWORK, EQUIPMENT, ETC. - VERIFY LOCATION OF ALL OWNER PROVIDED EQUIPMENT THAT WILL REQUIRE BLOCKING.
O. SLOPE AT FLOOR DRAINS SHALL NOT EXCEED 1:48 SLOPE IN AREAS OF ACCESSIBLE PATH OF TRAVEL.

WALL LEGEND

1-HR FIRE RATED WALL TO DECK - SEALED: RE TO G002

FLOOR PLAN KEYED NOTES

1 1-TIER P-LAM STORAGE LOCKERS
2 PROVIDE REVERSE OSMOSIS SUPPLY BENEATH SINK
3 FIRE EXTINGUISHER IN CABINET AT DRYWALL LOCATIONS, AND SURFACE MOUNTED AT METAL LINER PANELS LOCATIONS
4 EXTRA LENGTH MURPHY BED (O.F.C.I.). CONTRACTOR TO VERIFY SIZE REQUIREMENTS OF BED w/ OWNER PRIOR TO INSTALLATION. CONTRACTOR SHALL ENSURE THAT BED INSTALLATION PROVIDES FLUSH TRANSITION BETWEEN BED AND ADJACENT WALL WHEN BED IS IN FOLDED POSITION
5 MURPHY BED (O.F.C.I.). CONTRACTOR TO VERIFY SIZE REQUIREMENTS OF BED w/ OWNER PRIOR TO INSTALLATION.
6 OFFICE FURNITURE (O.F.C.I.). CONTRACTOR TO COORDINATE AND PROVIDE BLOCKING IN WALL AS REQUIRED TO ADEQUATELY SUPPORT FURNITURE
7 48" THOR RANGE
8 POT FILLER
9 ROPE HOOK
10 FIXED LADDER
11 MICROWAVE

PROFESSIONAL SEAL

REGISTERED ARCHITECT JUSTIN E. MYERS 24840 STATE OF TEXAS

LOGO/CONTACT

martinez ARCHITECTS

Martinez Architect, LP
900 Rockmead, Suite 250
Houston, Texas 77339
281.346.7371

DESIGN TEAM

Architectural
Martinez Architects

Civil Engineer
Maverick Engineering

Structural
Matrix Structural Engineers

MIE/P/T
DBR

Landscape Architect
KDC Associates

FIRE STATION #5
CITY OF MIDLAND
2210 W GOLF COURSE RD
MIDLAND, TX 79701

PROJECT No: **MA 18017**
DATE: **16-JAN-2020**

ISSUE
75% CONSTRUCTION DOCUMENT 26-JUN-2019
100% ISSUE FOR PERMIT 30-JUL-2019
100% ISSUE FOR APPROVAL TO BID 16-JAN-2020

LEVEL 2

A 202

4.1243

GENERAL NOTES

A. FURNITURE AND EQUIPMENT NOT SHOWN FOR CLARITY. RE: A201
B. DIMENSIONS ARE TO FINISHED FACE OF INT. WALLS.
C. DIMENSIONS ARE TO EXT. FACE OF BRICK
D. COLUMN LINES ARE DIMENSIONED:
   - TO CENTER LINE OF WEB WHEN ON AXIS WITH GRID LINE
   - TO FACE OF FLANGE WHEN WEB IN PERPENDICULAR TO GRID LINE
   - TO CENTER OF TUBE COLUMNS
   - TO CENTER OF PIPE COLUMNS
E. PRE-ENGINEERED METAL BUILDING MANUFACTURER SHALL CONFORM TO DIMENSION AS SHOWN ON ARCHITECTURAL AND STRUCTURAL CONSTRUCTION DOCUMENTS

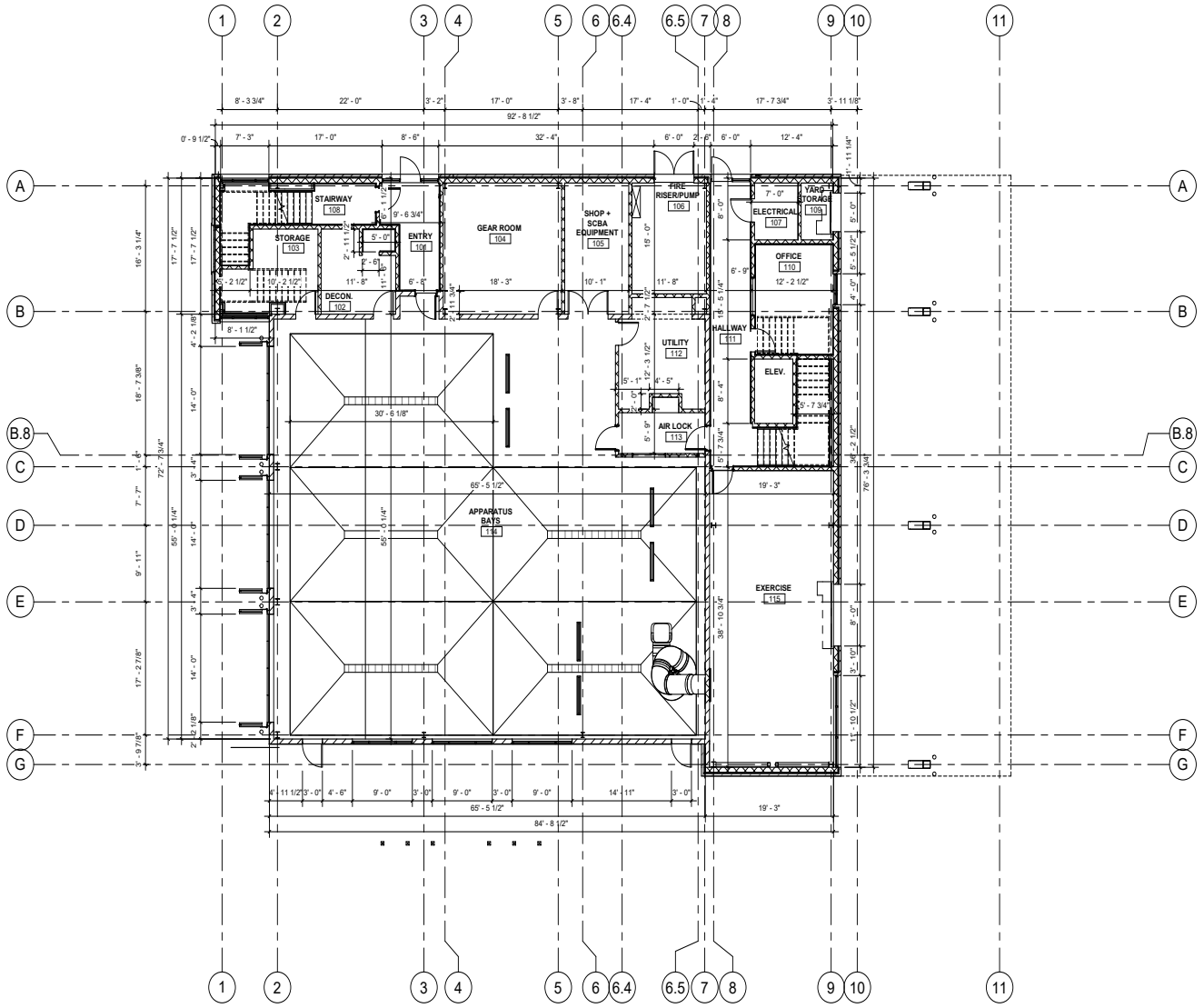

1 LEVEL 1 - DIMENSIONED FLOOR PLAN
SCALE: 1/8" = 1'-0"

TRUE NORTH PROJECT NORTH

PROFESSIONAL SEAL

REGISTERED ARCHITECT JUSTIN E. MYERS 24840 STATE OF TEXAS

LOGO/CONTACT

martinez ARCHITECTS

Martinez Architect, LP
900 Rockmead, Suite 250
Houston, Texas 77339
281.346.7371

DESIGN TEAM

Architectural
Martinez Architects

Civil Engineer
Maverick Engineering

Structural
Matrix Structural Engineers

M/E/P/T
DBR

Landscape Architect
KDC Associates

FIRE STATION #5

CITY OF MIDLAND
2210 W GOLF COURSE RD
MIDLAND, TX 79701

PROJECT No: **MA 18017**
DATE: **16-JAN-2020**

ISSUE

75% CONSTRUCTION DOCUMENT
26-JUN-2019

100% ISSUE FOR PERMIT
30-JUL-2019

100% ISSUE FOR APPROVAL TO BID
16-JAN-2020

LEVEL 1 DIMENSIONED FLOOR PLAN

A 203

4.1244

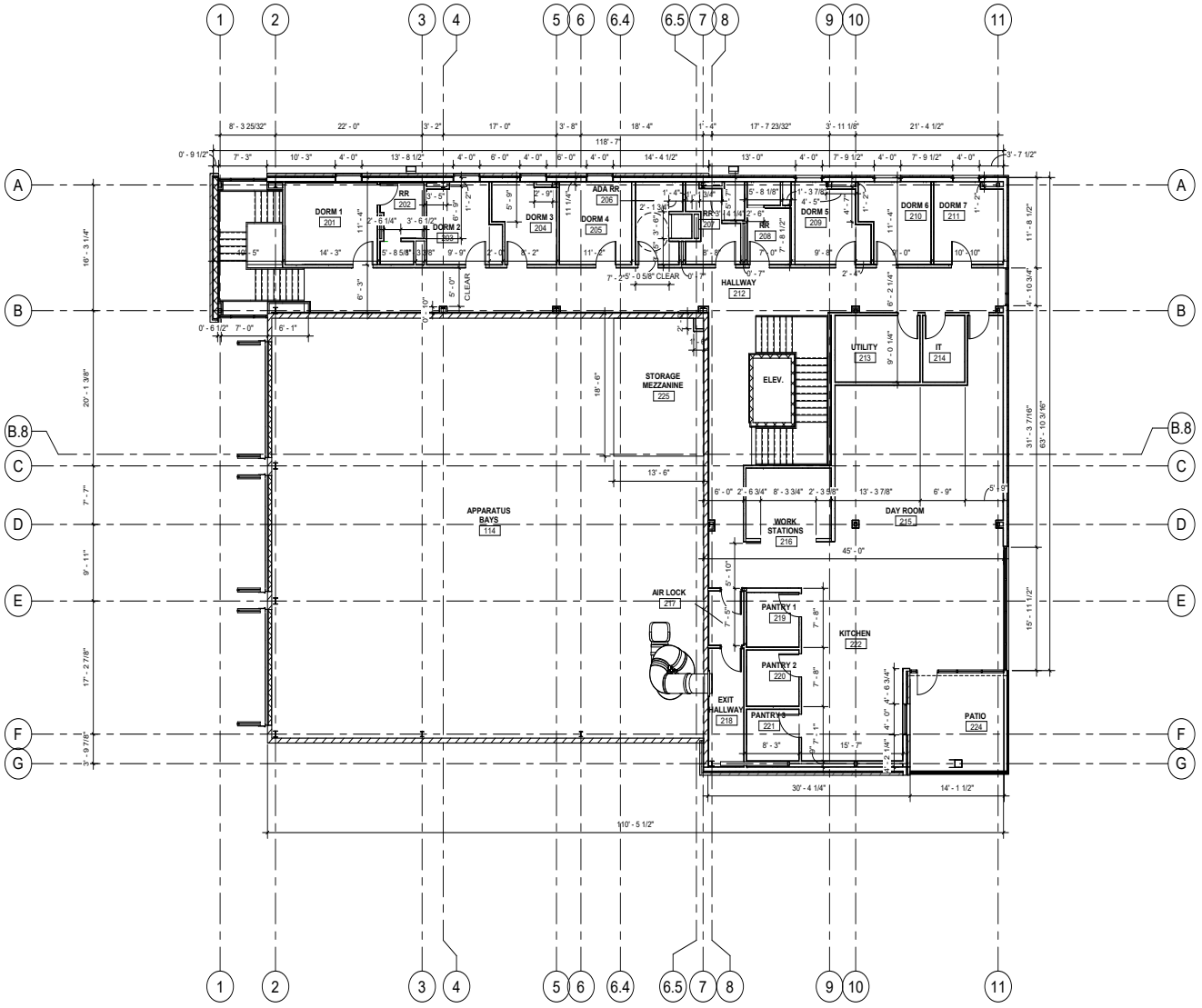

1 LEVEL 2 - DIMENSIONED FLOOR PLAN
SCALE: 1/8" = 1'-0"

TRUE NORTH
PROJECT NORTH

4.1245

PROFESSIONAL SEAL

REGISTERED ARCHITECT JUSTIN E. MYERS 24640 STATE OF TEXAS

LOGO/CONTACT

martinez ARCHITECTS

Martinez Architect, LP
900 Rockmead, Suite 250
Houston, Texas 77339
281.346.7371

DESIGN TEAM

Architectural
Martinez Architects

Civil Engineer
Maverick Engineering

Structural
Matrix Structural Engineers

M/E/P/T
DBR

Landscape Architect
KDC Associates

FIRE STATION #5

CITY OF MIDLAND
2210 W GOLF COURSE RD
MIDLAND, TX 79701

PROJECT No: **MA 18017**
DATE: **16-JAN-2020**

ISSUE

75% CONSTRUCTION DOCUMENT
26-JUN-2019

100% ISSUE FOR PERMIT
30-JUL-2019

100% ISSUE FOR APPROVAL TO BID
16-JAN-2020

LEVEL 2
DIMENSIONED
FLOOR PLAN

A 204

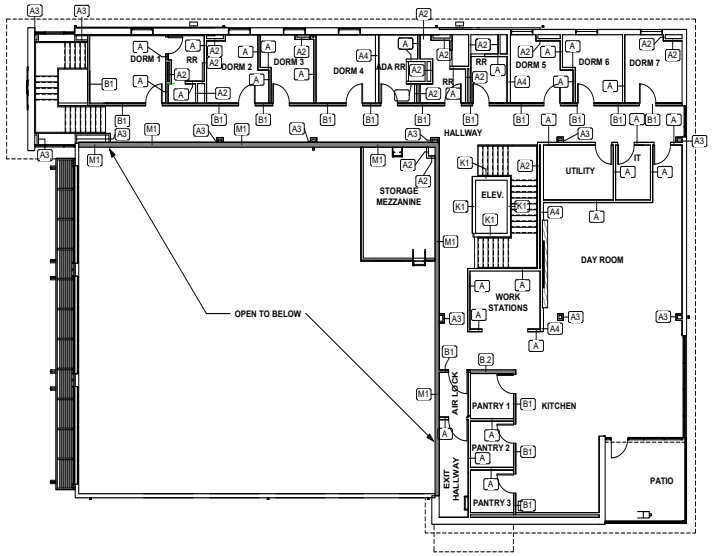

2 LEVEL 2 - PARTITION TYPES
SCALE: 3/32" = 1'-0"

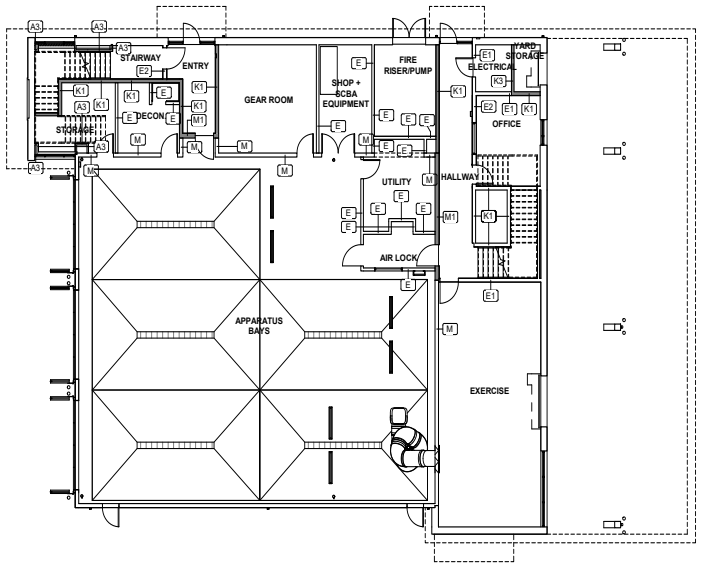

TRUE NORTH N
PROJECT NORTH N

1 LEVEL 1 - PARTITION TYPE PLAN
SCALE: 3/32" = 1'-0"

4.1246

PROFESSIONAL SEAL

REGISTERED ARCHITECT JUSTIN E. MYERS 24640 STATE OF TEXAS

LOGO/CONTACT

martinez ARCHITECTS

Martinez Architect, LP
900 Rockmead, Suite 250
Houston, Texas 77339
281.346.7371

DESIGN TEAM

Architectural
Martinez Architects

Civil Engineer
Maverick Engineering

Structural
Matrix Structural Engineers

M/E/P/T
DBR

Landscape Architect
KDC Associates

FIRE STATION #5

CITY OF MIDLAND
2210 W GOLF COURSE RD
MIDLAND, TX 79701

PROJECT No: **MA 18017**
DATE: **16-JAN-2020**

ISSUE

75% CONSTRUCTION DOCUMENT
26-JUN-2019

100% ISSUE FOR PERMIT
30-JUL-2019

100% ISSUE FOR APPROVAL TO BID
16-JAN-2020

LEVEL 1 + 2
PARTITION TYPES

A 205

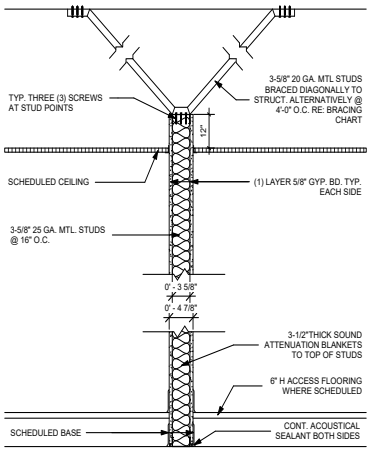

A

TYPE	FIRE RAT'G	DESCRIPTION
A	NONE	(AS SHOWN)
A1	NONE	6" METAL STUD WITH BLANKET INSULATION, GYP. BD. BOTH SIDES
A2	NONE	5/8" GYP ONE SIDE ON 3 5/8" METAL STUD. NO INSULATION.
A3	NONE	5/8" GYP ONE SIDE ON 2 1/2" METAL STUD. NO INSULATION.
A4	NONE	AS SHOWN, WITH 6" MTL STUD

2 PARTITION TYPE "A"
SCALE: 1" = 1'-0"

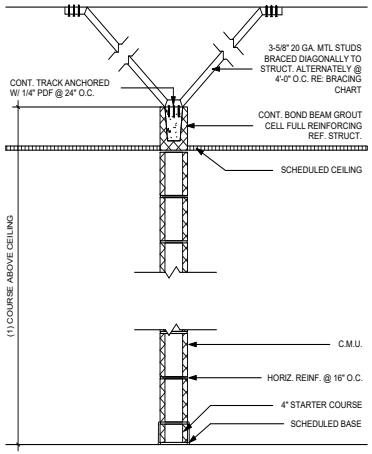

E

TYPE	FIRE RAT'G	DESCRIPTION	STC RAT'G
E	NONE	6" CMU (AS SHOWN)	N/A
E1	NONE	6" CMU (@ SIM. :[" FURRING CHANNELS w/ }" GYP. BD.1 SIDES	N/A
E2	NONE	6" CMU (@ SIM. :[" FURRING CHANNELS w/ }" GYP. BD.2 SIDES	
E3	NONE	8" CMU	N/A
E4	NONE	8" CMU (@ SIM. : [" FURRING CHANNELS w/ }" GYP. BD. 1 SIDE	

6 PARTITION TYPE "E"
SCALE: 1" = 1'-0"

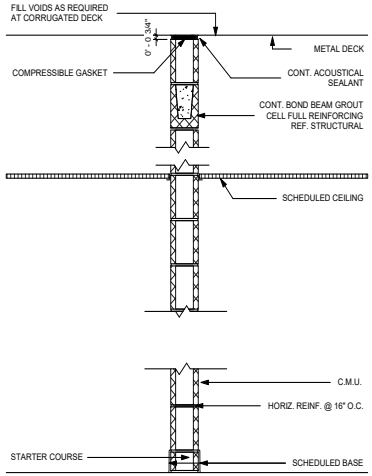

K

TYPE	FIRE RAT'G	DESCRIPTION	STC RAT'G
K	2-HR	8" CMU TO DECK (AS SHOWN)	
K1	2-HR	6" CMU W/ 5/8" GYP BD. OVER 7/8" CHANNEL, ONE SIDE	
K2	NONE	6" CMU TO DECK	
K3	2-HR	6" CMU TO DECK	

11 PARTITION TYPE "K"
SCALE: 1" = 1'-0"

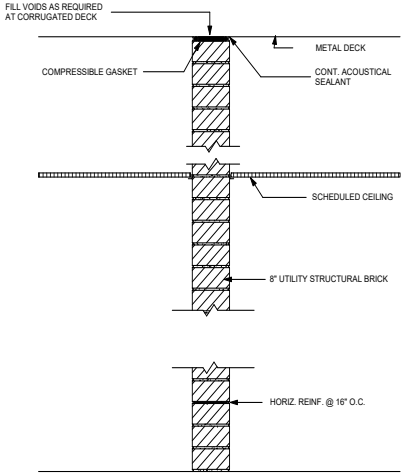

M

TYPE	FIRE RAT'G	DESCRIPTION	STC RAT'G
M	2-HR	8" STRUCTURAL BRICK TO DECK (AS SHOWN)	
M1	2-HR	SAME AS "K" w/ 5/8" GYP. BD. OVER 1" RIGID INSULATION" AND FURRING CHANNELS, ONE SIDE	

3 PARTITION TYPE "M"
SCALE: 1" = 1'-0"

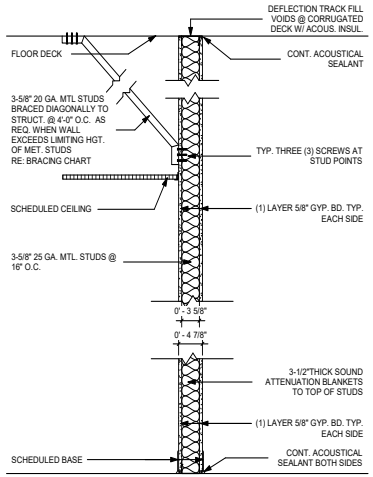

B

TYPE	FIRE RAT'G	DESCRIPTION
B	NONE	AS SHOWN
B.1	60 MIN.	SAME AS "B", w/ 1 HOUR RATING
B.2	60 MIN.	SAME AS "B1", w/ 6" STUDS
B.3	NONE	SAME AS "B", w/ 6" STUDS

1 PARTITION TYPE "B"
SCALE: 1" = 1'-0"

PROFESSIONAL SEAL

REGISTERED ARCHITECT JUSTIN E. MYERS 24640 STATE OF TEXAS

LOGO/CONTACT

martinez ARCHITECTS

Martinez Architect, LP
900 Rockmead, Suite 250
Houston, Texas 77339
281.346.7371

DESIGN TEAM

Architectural
Martinez Architects

Civil Engineer
Maverick Engineering

Structural
Matrix Structural Engineers

M/E/P/T
DBR

Landscape Architect
KDC Associates

FIRE STATION #5

CITY OF MIDLAND
2210 W GOLF COURSE RD
MIDLAND, TX 79701

PROJECT No: **MA 18017**
DATE: **16-JAN-2020**

ISSUE
75% CONSTRUCTION DOCUMENT 26-JUN-2019
100% ISSUE FOR PERMIT 30-JUL-2019
100% ISSUE FOR APPROVAL TO BID 16-JAN-2020

PARTITION TYPES

A 206

4.1247

GENERAL NOTES

A. ROOFING MANUFACTURER TO SUBMIT DETAILED SHOP DRAWINGS SHOWING ALL ROOF EDGE AND CONNECTION DETAILS FOR ARCHITECT'S APPROVAL.
B. COLORS OF ALL EXTERIOR METAL TO BE SELECTED BY ARCHITECT FROM MANUFACTURER'S FULL RANGE.
C. RE: MEP DWGS. FOR ALL ROOF PENETRATIONS.
D. ROOFING MANUFACTURER / INSTALLER SHALL SUBMIT WEATHER-TIGHTNESS WARRANTY TO ARCHITECT FOR APPROVAL AS SPECIFIED.
E. ALL DOWNSPOUTS SHALL TIE INTO UNDERGROUND STORM SEWER. PROVIDE CAST IRON BOOTS. RE: CIVIL
F. APPROVED MANUFACTURER TO PROVIDE PRE-FINISHED METAL CANOPIES AND SUNSHADE DEVICES.
G. CONTRACTOR SHALL VERIFY AND COORDINATE ALL REQUIRED ROOF PENETRATIONS FOR ITEMS INDICATED ON M/E/P DRAWINGS THAT WILL PENETRATE ROOF.
H. REFER TO AND COMPLY WITH ARCHITECTURAL SHEET METAL MANUAL, LATEST EDITION, SMACNA.
I. GUTTERS AND DOWNSPOUTS SHALL BE PRE-FINISHED METAL.
J. REFER TO WALL SECTIONS FOR ROOF DETAILS

DS - DOWNSPOUT LOCATION

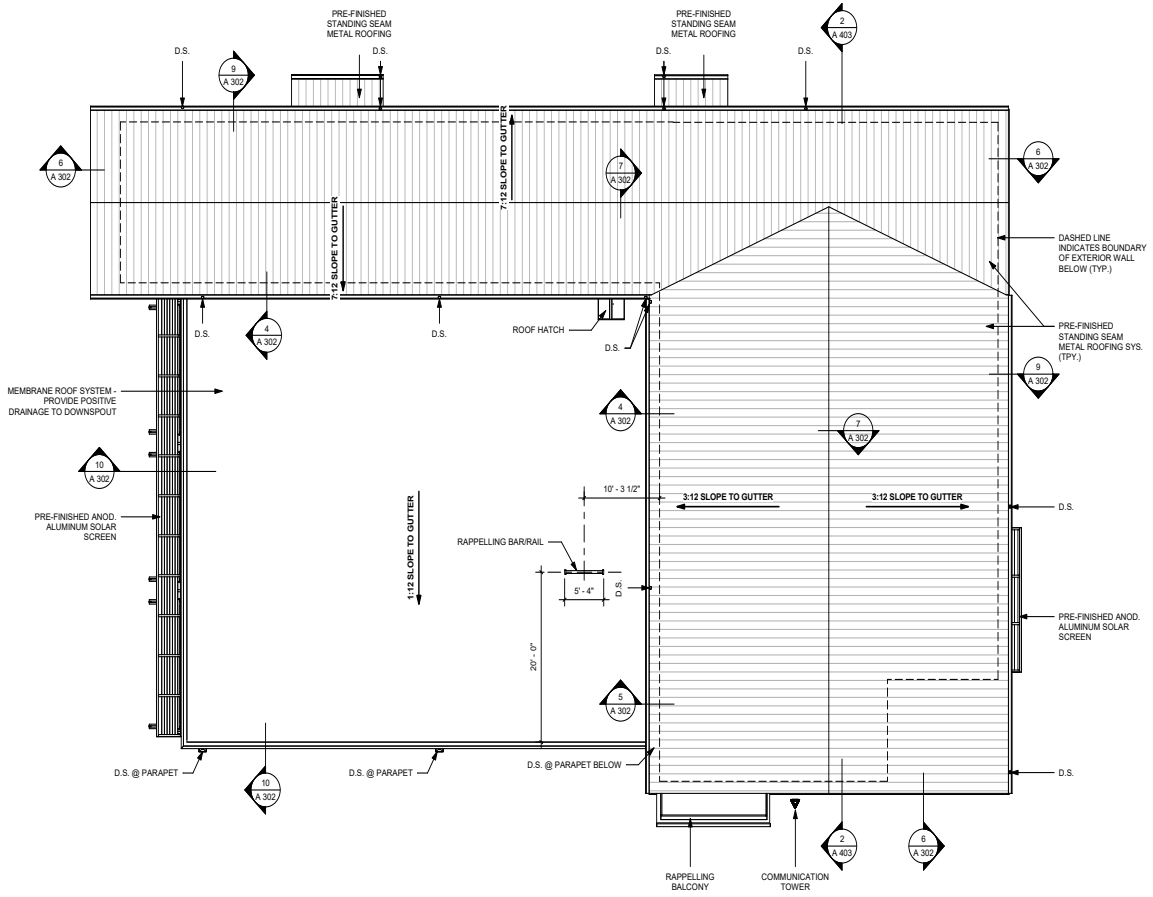

1 ROOF PLAN
SCALE: 1/8" = 1'-0"

TRUE NORTH
PROJECT NORTH

PROFESSIONAL SEAL

REGISTERED ARCHITECT JUSTIN E. MYERS 24840 STATE OF TEXAS

LOGO/CONTACT

martinez ARCHITECTS
Martinez Architect, LP
900 Rockmead, Suite 250
Houston, Texas 77339
281.346.7371

DESIGN TEAM

Architectural
Martinez Architects
Civil Engineer
Maverick Engineering
Structural
Matrix Structural Engineers
M/E/P/T
DBR
Landscape Architect
KDC Associates

FIRE STATION #5
CITY OF MIDLAND
2210 W GOLF COURSE RD
MIDLAND, TX 79701

PROJECT No: **MA 18017**
DATE: **16-JAN-2020**

ISSUE
75% CONSTRUCTION DOCUMENT 26-JUN-2019
100% ISSUE FOR PERMIT 30-JUL-2019
100% ISSUE FOR APPROVAL TO BID 16-JAN-2020

ROOF PLAN

A 301

4.1248

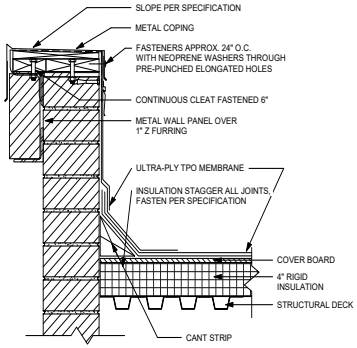

10 ROOF @ PARAPET WALL
SCALE: 1 1/2" = 1'-0"

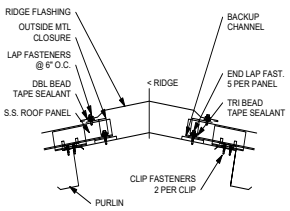

7 RIDGE
SCALE: N/A

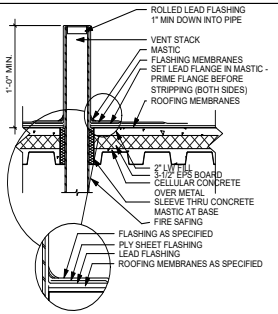

3 TYP ROOF PENETRATIONS
SCALE: N/A

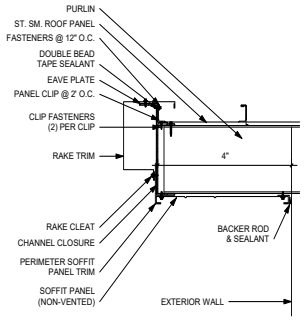

6 RAKE
SCALE: N/A

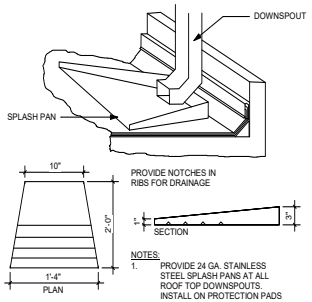

2 TYP DOWNSPOUT AT ROOF
SCALE: N/A

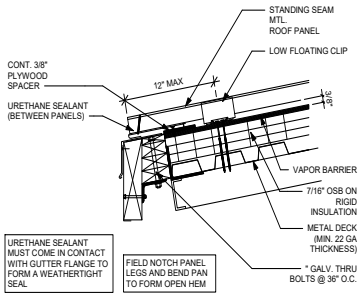

9 EAVE
SCALE: N/A

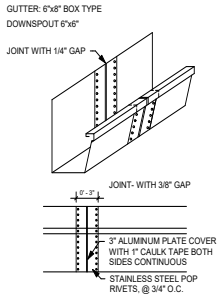

5 GUTTER
SCALE: N/A

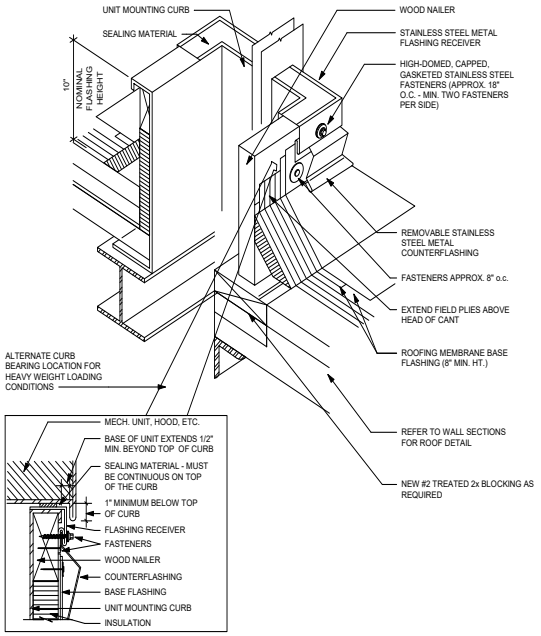

1 TYP EQUIPMENT CURB
SCALE: N/A

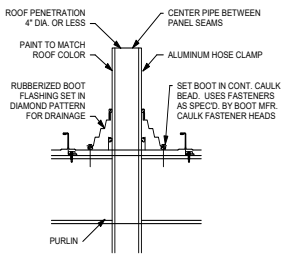

8 PENETRATION
SCALE: N/A

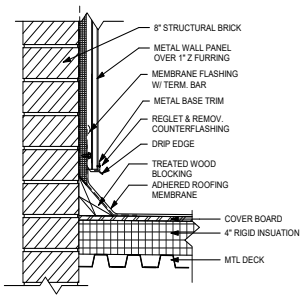

4 ROOF @ WALL
SCALE: N/A

GENERAL NOTES

1. ROOFING MANUF. / CONTRACTOR SHALL PROVIDE AND SUBMIT WEATHER-TIGHTNESS WARRANTY TO OWNER FOR APPROVAL AS SPECIFIED.
2. ROOFING MANUF. TO SUBMIT DETAILED SHOP DRAWINGS SHOWING ALL ROOF EDGE AND CONNECTION DETAILS FOR ARCHITECT'S APPROVAL
3. ALL EXTERIOR METAL TO BE SELECTED BY ARCHITECT FROM MANUF. FULL RANGE OF COLORS AND FINISHES.
4. COORD. MEP DWGS. FOR ALL ROOF PENETRATIONS. ALL PENETRATIONS SHALL BE FINISHED TO MATCH ROOF PANEL COLOR.
5. IN NO INSTANCE SHALL TREATED FRAMING BE IN DIRECT CONTACT WITH METAL ROOFING PANELS.
6. ALL CURBS TO BE SUPPLIED BY METAL ROOFING MANUF. NO FIELD FABRICATED CURBS SHALL BE PERMITTED.
7. ALL STANDING SEAM ROOF SLOPE ARE TO BE A MINIMUM OF 3:12 SLOPE UNLESS NOTED OTHERWISE. REFERENCE ROOF PLAN.
8. APPROVED METAL FLASHING AT ALL HIPS AND VALLEYS RE: DETAILS AND SPECS.
9. CONTRACTOR SHALL VERIFY AND COORDINATE ALL ROOF PENETRATIONS ON MEP AND STRUCTURAL.
10. SIDEWALL CONDITIONS MUST USE STEP FLASHING AS FOLLOWS:
    A. AT STANDING SEAM METAL ROOF ALL SIDEWALL CONDITIONS MUST USE STAINLESS STEEL THRU WALL FLASHING INCORPORATED INTO STANDARD PANEL MANUFRS. DETAILS
    B. SURFACE MOUNTED FLASHING IS NOT ACCEPTABLE.
11. PRE-FINISHED METAL GUTTER AND DOWNSPOUT TYP. RE: DETAILS AND SPECS.
12. REFER TO ARCHITECTURAL SHEET METAL MANUAL, LATEST EDITION, SMACNA.
13. DOWNSPOUTS TO TERMINATE TO UNDERGROUND STORM SYSTEM.
14. REFERENCE WALL SECTIONS FOR OVERHEAD DIMENSIONS.

PROFESSIONAL SEAL

REGISTERED ARCHITECT JUSTIN E. MYERS 24840 STATE OF TEXAS

LOGO/CONTACT

martinez ARCHITECTS

Martinez Architect, LP
900 Rockmead, Suite 250
Houston, Texas 77339
281.346.7371

DESIGN TEAM

Architectural
Martinez Architects

Civil Engineer
Maverick Engineering

Structural
Matrix Structural Engineers

M/E/P/T
DBR

Landscape Architect
KDC Associates

FIRE STATION #5
CITY OF MIDLAND
2210 W GOLF COURSE RD
MIDLAND, TX 79701

PROJECT No: **MA 18017**
DATE: **16-JAN-2020**

ISSUE
75% CONSTRUCTION DOCUMENT 26-JUN-2019
100% ISSUE FOR PERMIT 30-JUL-2019
100% ISSUE FOR APPROVAL TO BID 16-JAN-2020

ROOF DETAILS

A 302

4.1249

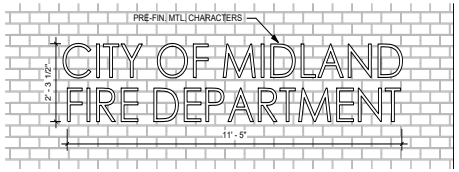

5 ELEVATION DETAIL
SCALE: 1/2" = 1'-0"

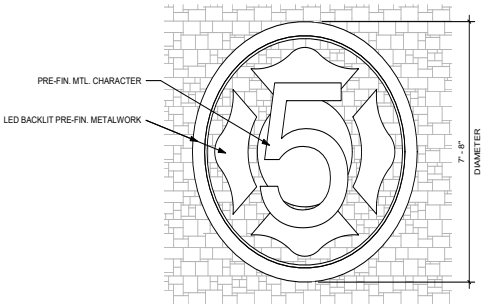

4 ELEVATION DETAIL
SCALE: 1/2" = 1'-0"

GENERAL EXTERIOR ELEVATION NOTES

A. G.C. SHALL PROVIDE WIND LOAD CERTIFICATION FROM REGISTERED ENGINEER UPON COMPLETION OF PROJECT. ENGINEER TO CERTIFY 150 MPH FOR ALL COMPONENTS OF BUILDING INCLUDING BUT NOT LIMITED TO THE FOUNDATION, WALLS, DOORS, FRAMES, WINDOWS, AND ROOF.
B. G.C. TO COORDINATE ALL LOUVERS, VENTS AND OTHER PENETRATIONS WITH ARCHITECT PRIOR TO INSTALLATION.
C. G.C. TO PERFORM SMOKE TEST. SEAL ALL PENETRATION INDICATED BY RESULTS - COORDINATE WITH ARCHITECT/OWNER
D. TIE ALL DOWNSPOUTS TO UNDERGROUND STORM SYSTEM (RE: PLUMBING AND CIVIL)
E. SIGNAGE SUBCONTRACTOR SHALL BE RESPONSIBLE TO SECURE SEPARATE PERMIT FOR ALL SIGNAGE.

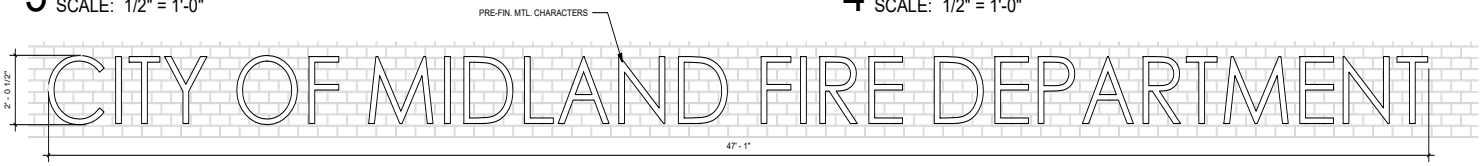

3 ELEVATION DETAIL
SCALE: 1/2" = 1'-0"

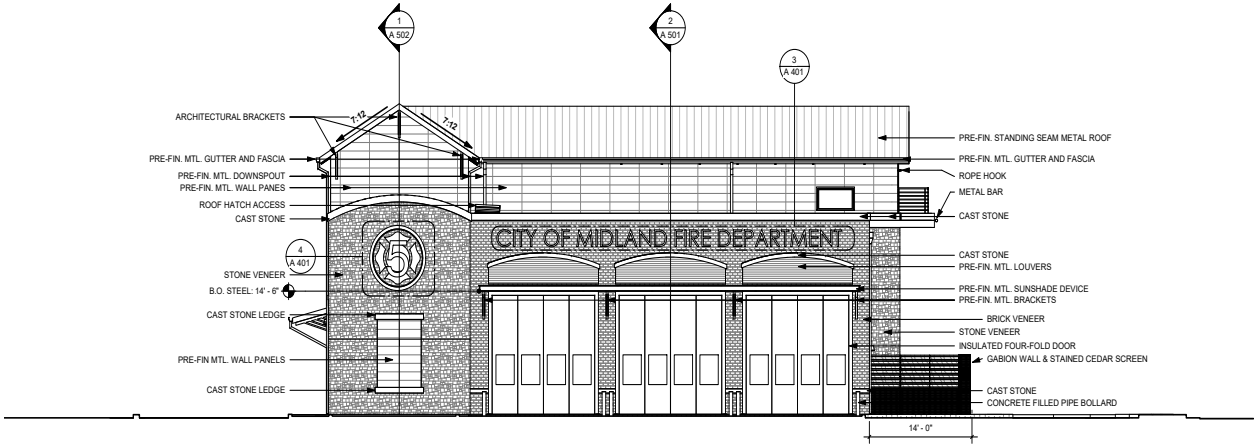

2 WEST ELEVATION
SCALE: 1/8" = 1'-0"

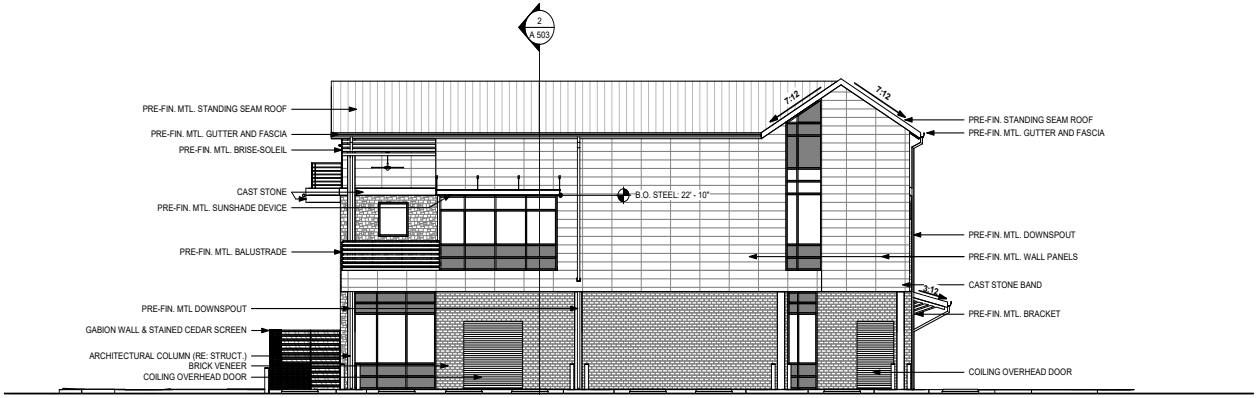

1 EAST ELEVATION
SCALE: 1/8" = 1'-0"

PROFESSIONAL SEAL

REGISTERED ARCHITECT
JUSTIN E. MYERS
24840
STATE OF TEXAS

LOGO/CONTACT

martinez ARCHITECTS

Martinez Architect, LP
900 Rockmead, Suite 250
Houston, Texas 77339
281.346.7371

DESIGN TEAM

Architectural
Martinez Architects

Civil Engineer
Maverick Engineering

Structural
Matrix Structural Engineers

M/E/P/T
DBR

Landscape Architect
KDC Associates

FIRE STATION #5
CITY OF MIDLAND
2210 W GOLF COURSE RD
MIDLAND, TX 79701

PROJECT No: **MA 18017**
DATE: **16-JAN-2020**

ISSUE
75% CONSTRUCTION DOCUMENT 26-JUN-2019
100% ISSUE FOR PERMIT 30-JUL-2019
100% ISSUE FOR APPROVAL TO BID 16-JAN-2020

EXTERIOR ELEVATIONS

A 401

4.1250

GENERAL EXTERIOR ELEVATION NOTES

A. G.C. SHALL PROVIDE WIND LOAD CERTIFICATION FROM REGISTERED ENGINEER UPON COMPLETION OF PROJECT. ENGINEER TO CERTIFY 150 MPH FOR ALL COMPONENTS OF BUILDING INCLUDING BUT NOT LIMITED TO THE FOUNDATION, WALLS, DOORS, FRAMES, WINDOWS, AND ROOF.
B. G.C. TO COORDINATE ALL LOUVERS, VENTS AND OTHER PENETRATIONS WITH ARCHITECT PRIOR TO INSTALLATION.
C. G.C. TO PERFORM SMOKE TEST, SEAL ALL PENETRATION INDICATED BY RESULTS - COORDINATE WITH ARCHITECT/OWNER
D. TIE ALL DOWNSPOUTS TO UNDERGROUND STORM SYSTEM (RE: PLUMBING AND CIVIL)
E. SIGNAGE SUBCONTRACTOR SHALL BE RESPONSIBLE TO SECURE SEPARATE PERMIT FOR ALL SIGNAGE.

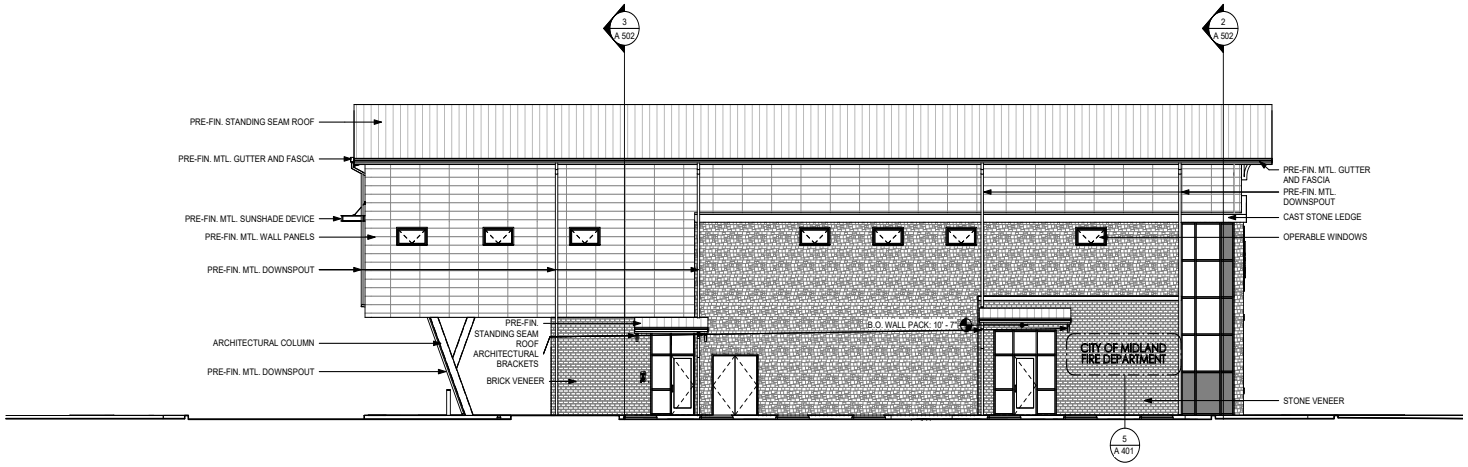

2 NORTH ELEVATION
SCALE: 1/8" = 1'-0"

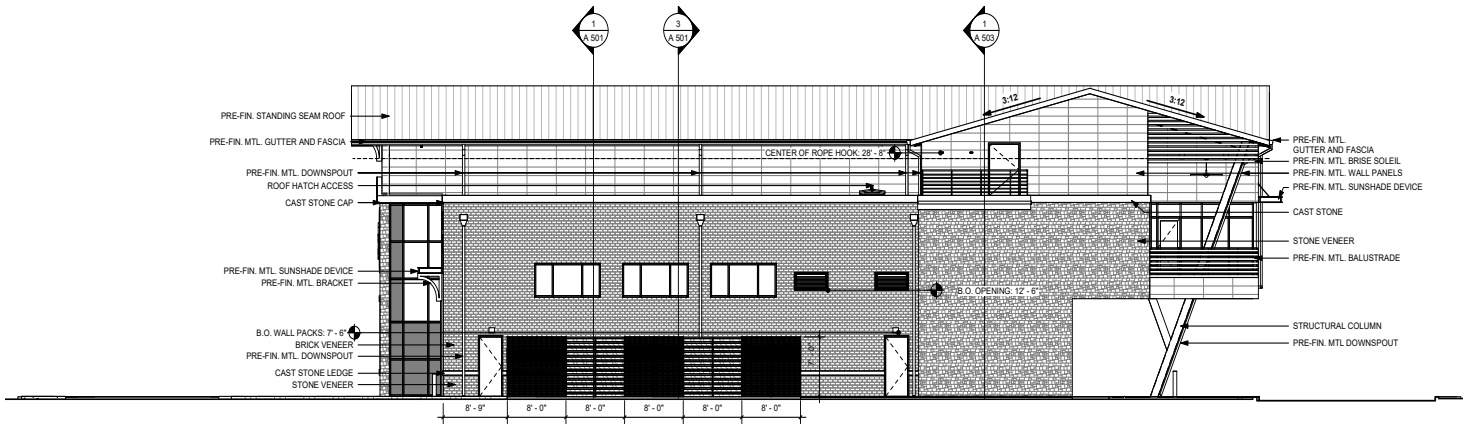

1 SOUTH ELEVATION
SCALE: 1/8" = 1'-0"

PROFESSIONAL SEAL

REGISTERED ARCHITECT JUSTIN E. MYERS 24640 STATE OF TEXAS

LOGO/CONTACT

martinez ARCHITECTS

Martinez Architect, LP
900 Rockmead, Suite 250
Houston, Texas 77339
281.346.7371

DESIGN TEAM

Architectural
Martinez Architects

Civil Engineer
Maverick Engineering

Structural
Matrix Structural Engineers

M/E/P/T
DBR

Landscape Architect
KDC Associates

FIRE STATION #5

CITY OF MIDLAND
2210 W GOLF COURSE RD
MIDLAND, TX 79701

PROJECT No: **MA 18017**
DATE: **16-JAN-2020**

ISSUE

75% CONSTRUCTION DOCUMENT
26-JUN-2019

100% ISSUE FOR PERMIT
30-JUL-2019

100% ISSUE FOR APPROVAL TO BID
16-JAN-2020

EXTERIOR ELEVATIONS

A 402

4.1251

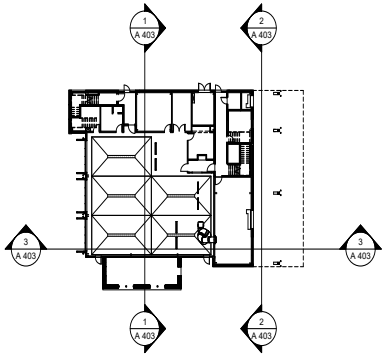

04 KEY PLAN
SCALE: 1" = 30'-0"

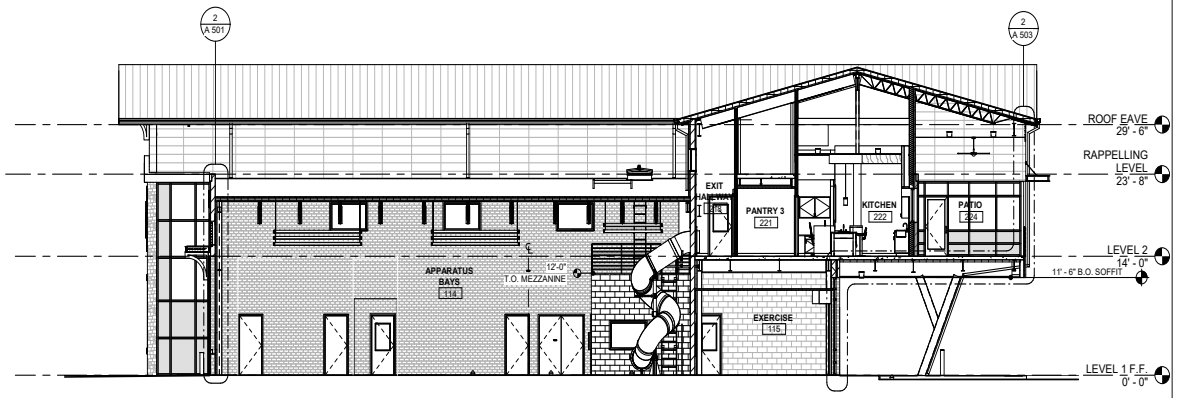

3 BUILDING SECTION
SCALE: 1/8" = 1'-0"

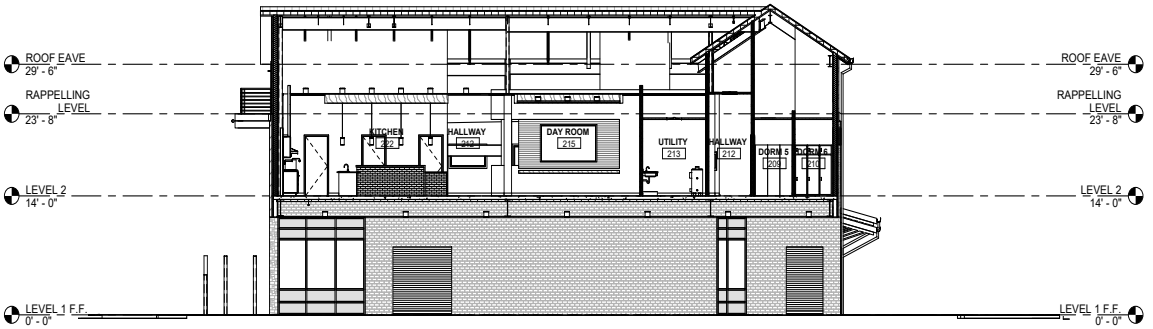

2 BUILDING SECTION
SCALE: 1/8" = 1'-0"

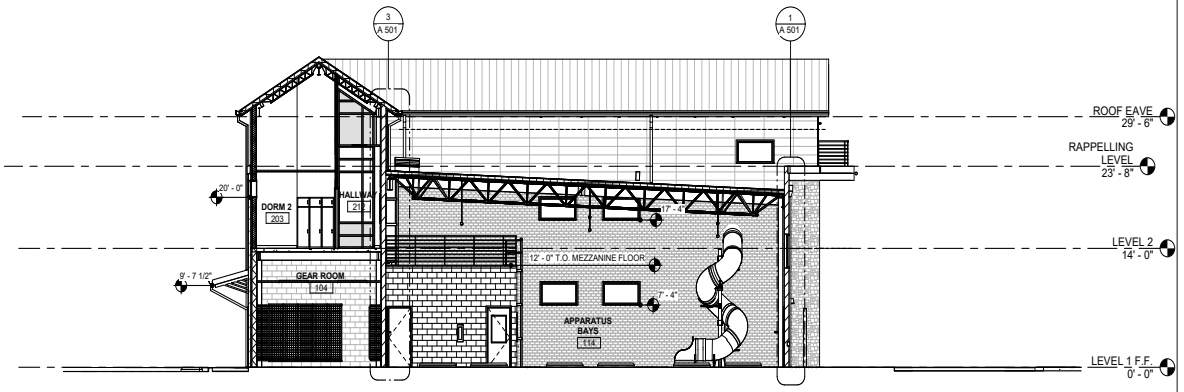

1 BUILDING SECTION
SCALE: 1/8" = 1'-0"

4.1252

PROFESSIONAL SEAL

REGISTERED ARCHITECT JUSTIN E. MYERS 24840 STATE OF TEXAS

LOGO/CONTACT

martinez ARCHITECTS

Martinez Architect, LP
900 Rockmead, Suite 250
Houston, Texas 77339
281.346.7371

DESIGN TEAM

Architectural
Martinez Architects

Civil Engineer
Maverick Engineering

Structural
Matrix Structural Engineers

M/E/P/T
DBR

Landscape Architect
KDC Associates

FIRE STATION #5
CITY OF MIDLAND
2210 W GOLF COURSE RD
MIDLAND, TX 79701

PROJECT No: **MA 18017**
DATE: **16-JAN-2020**

ISSUE
75% CONSTRUCTION DOCUMENT 26-JUN-2019
100% ISSUE FOR PERMIT 30-JUL-2019
100% ISSUE FOR APPROVAL TO BID 16-JAN-2020

BUILDING SECTIONS

A 403

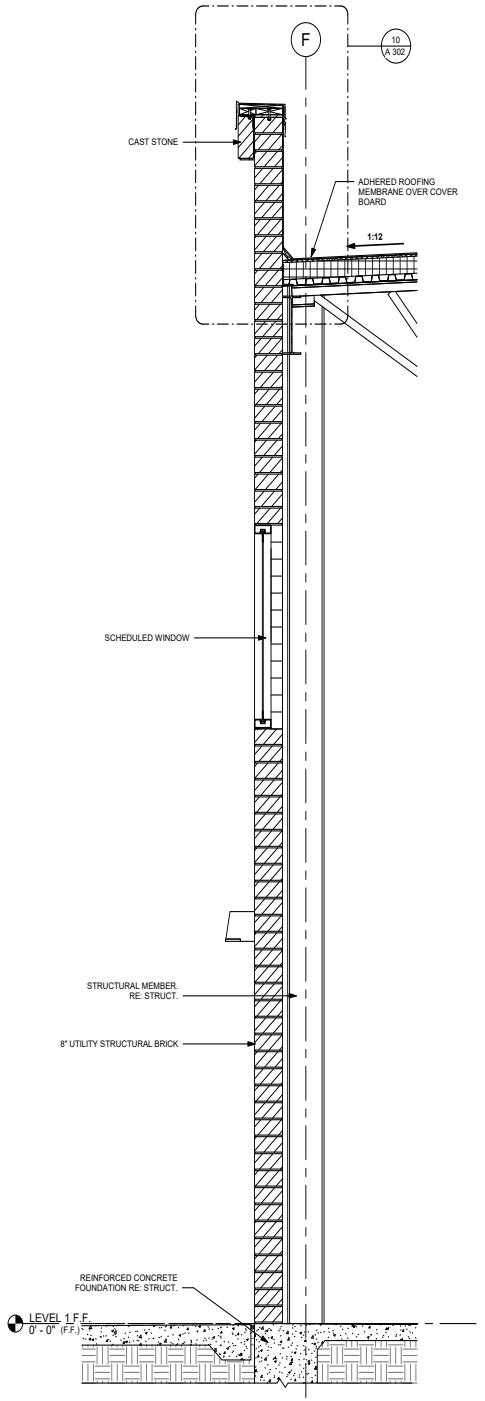

1 WALL SECTION
SCALE: 3/4" = 1'-0"

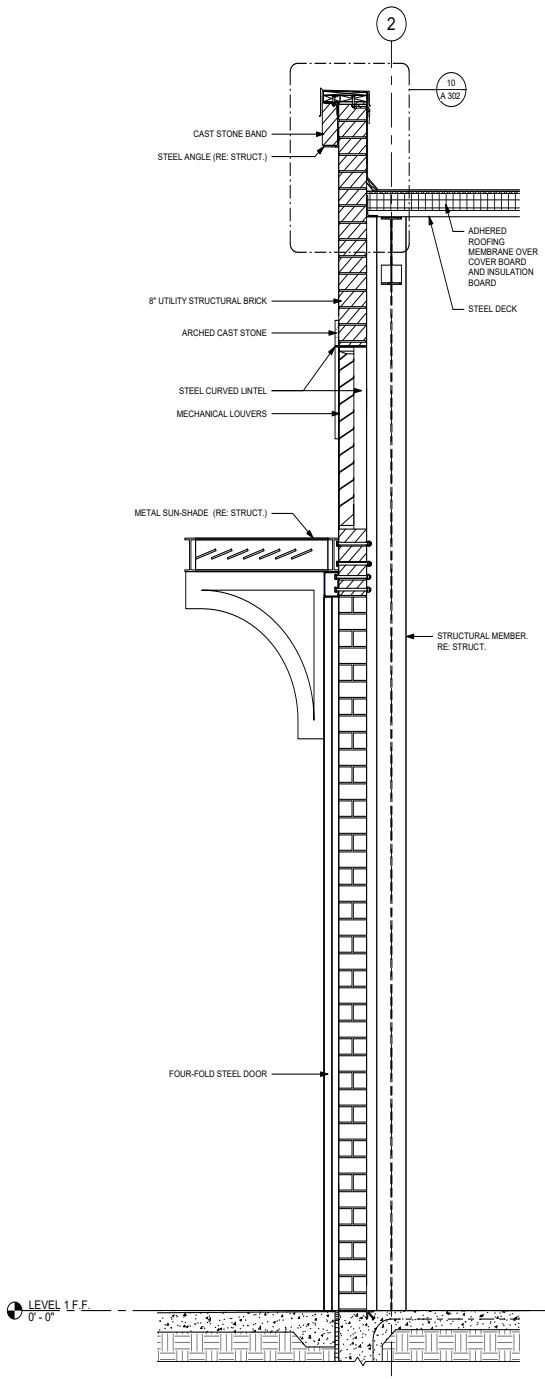

2 WALL SECTION
SCALE: 3/4" = 1'-0"

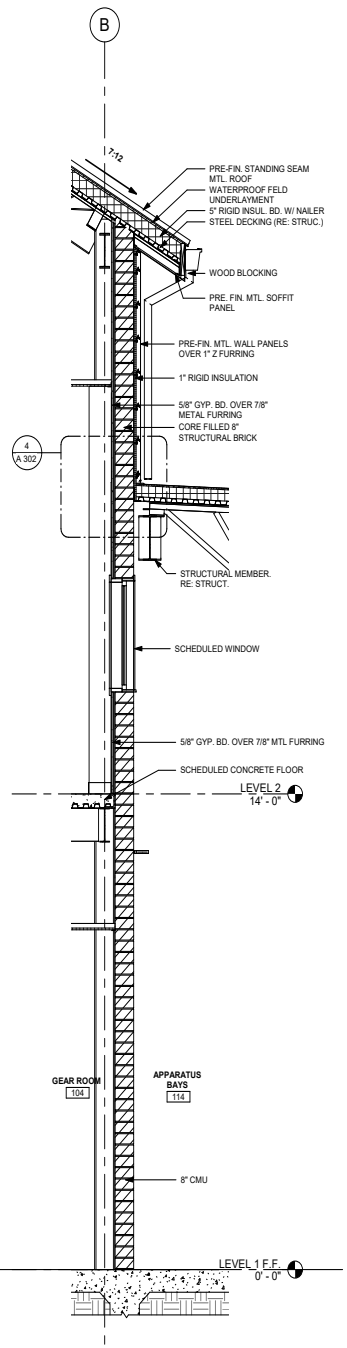

3 WALL SECTION
SCALE: 1/2" = 1'-0"

4.1253

PROFESSIONAL SEAL

REGISTERED ARCHITECT
JUSTIN E. MYERS
24640
STATE OF TEXAS

LOGO/CONTACT

martinez ARCHITECTS

Martinez Architect, LP
900 Rockmead, Suite 250
Houston, Texas 77339
281.346.7371

DESIGN TEAM

Architectural
Martinez Architects

Civil Engineer
Maverick Engineering

Structural
Matrix Structural Engineers

M/E/P/T
DBR

Landscape Architect
KDC Associates

FIRE STATION #5

CITY OF MIDLAND
2210 W GOLF COURSE RD
MIDLAND, TX 79701

PROJECT No: **MA 18017**
DATE: **16-JAN-2020**

ISSUE

75% CONSTRUCTION DOCUMENT
26-JUN-2019

100% ISSUE FOR PERMIT
30-JUL-2019

100% ISSUE FOR APPROVAL TO BID
16-JAN-2020

WALL SECTIONS

A 501

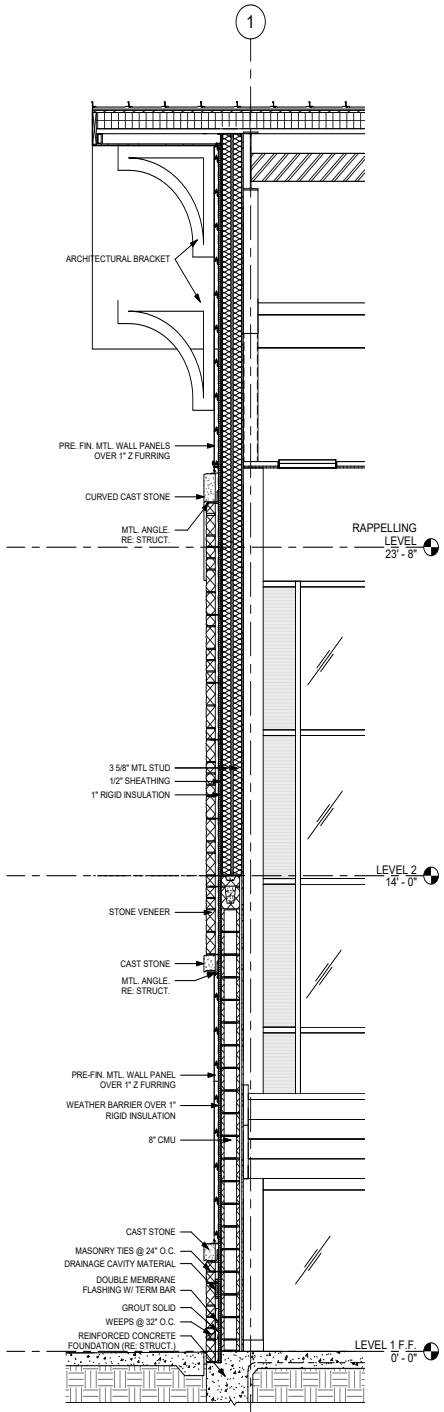

1 WALL SECTION
SCALE: 1/2" = 1'-0"

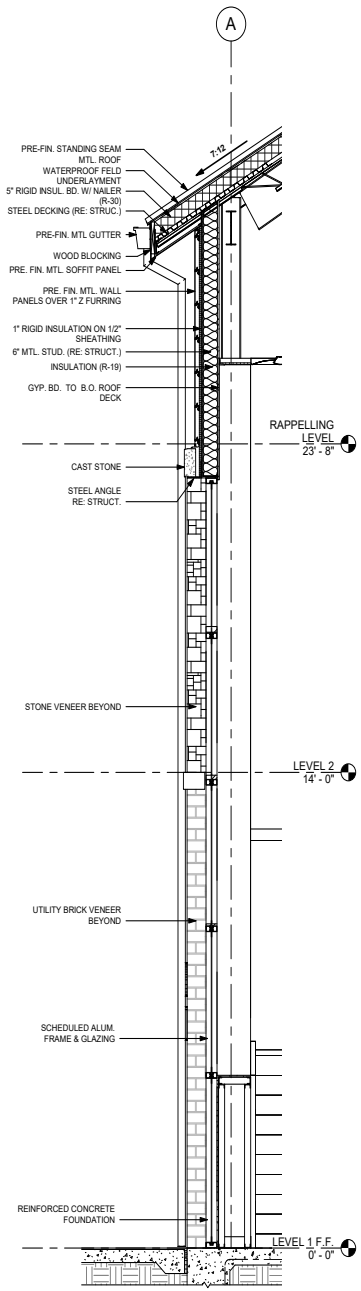

2 WALL SECTION
SCALE: 1/2" = 1'-0"

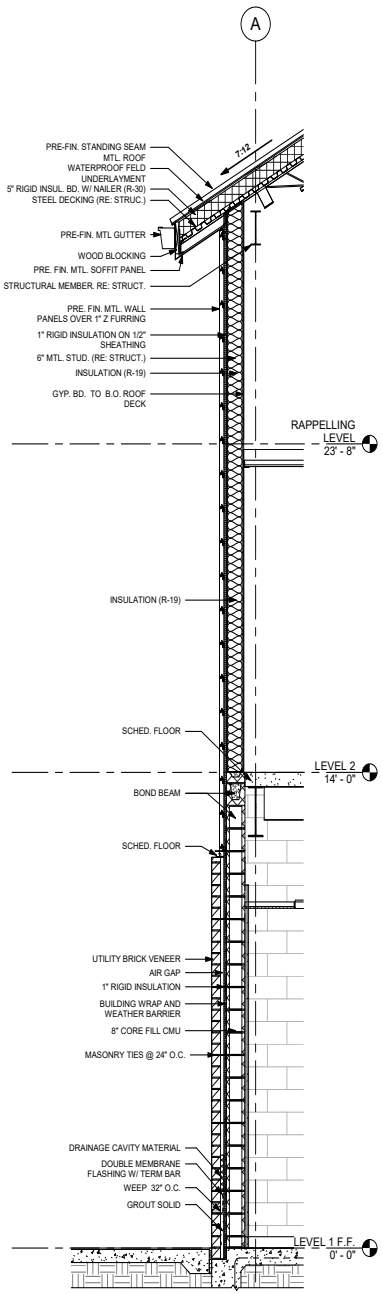

3 WALL SECTION
SCALE: 1/2" = 1'-0"

4.1254

PROFESSIONAL SEAL

REGISTERED ARCHITECT JUSTIN E. MYERS 24840 STATE OF TEXAS

LOGO/CONTACT

martinez ARCHITECTS

Martinez Architect, LP
900 Rockmead, Suite 250
Houston, Texas 77339
281.346.7371

DESIGN TEAM

Architectural
Martinez Architects

Civil Engineer
Maverick Engineering

Structural
Matrix Structural Engineers

M/E/P/T
DBR

Landscape Architect
KDC Associates

FIRE STATION #5
CITY OF MIDLAND
2210 W GOLF COURSE RD
MIDLAND, TX 79701

PROJECT No: **MA 18017**
DATE: **16-JAN-2020**

ISSUE
75% CONSTRUCTION DOCUMENT 26-JUN-2019
100% ISSUE FOR PERMIT 30-JUL-2019
100% ISSUE FOR APPROVAL TO BID 16-JAN-2020

WALL SECTIONS

A 502

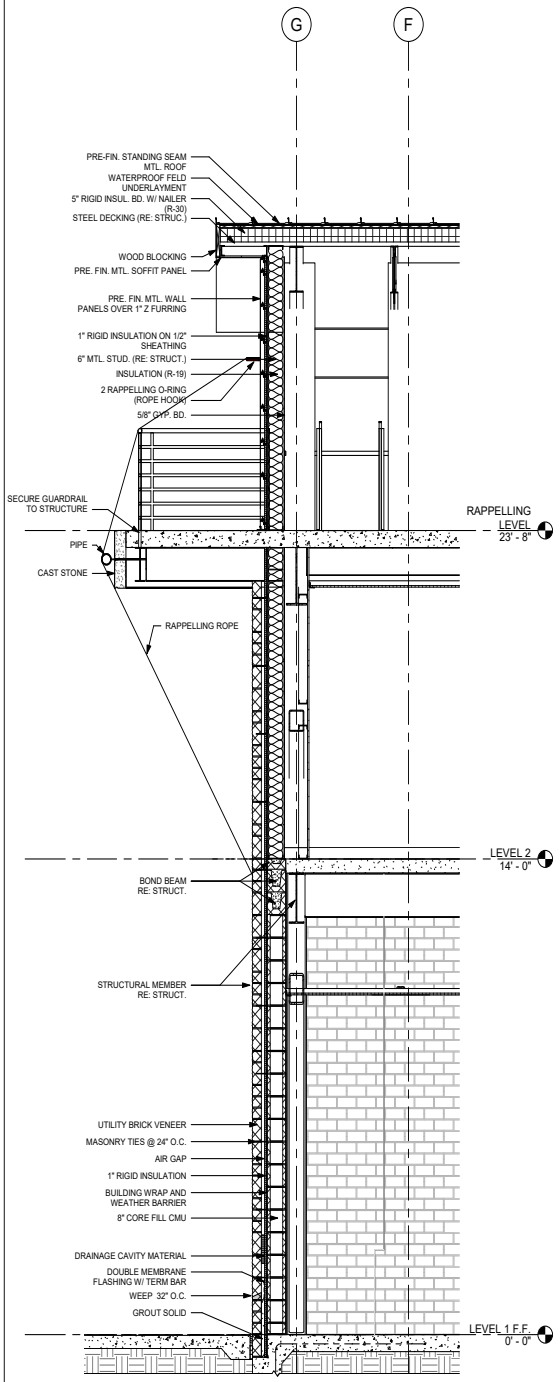

1 WALL SECTION
SCALE: 1/2" = 1'-0"

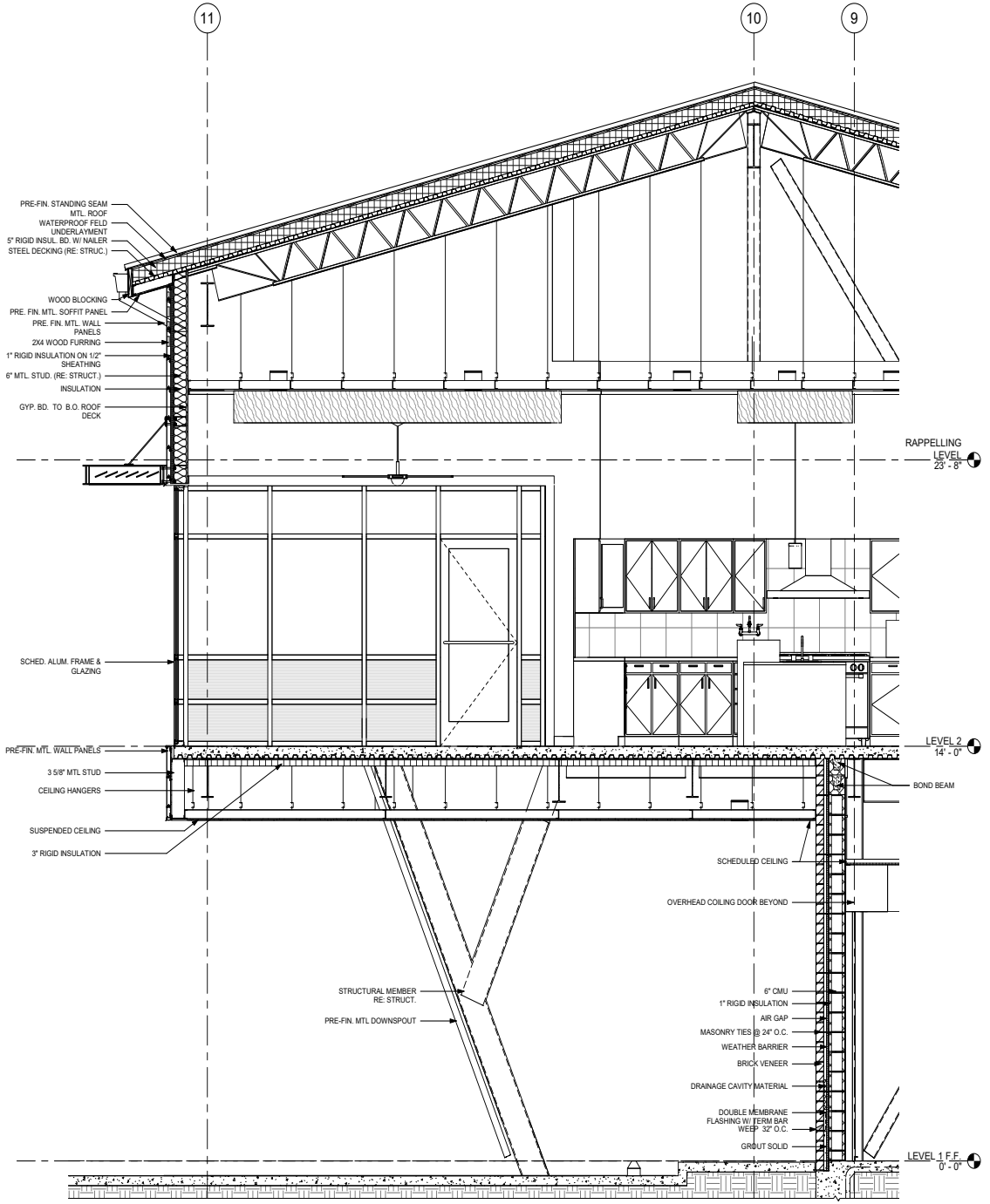

2 WALL SECTION
SCALE: 1/2" = 1'-0"

4.1255

PROFESSIONAL SEAL

REGISTERED ARCHITECT JUSTIN E. MYERS 24640 STATE OF TEXAS

LOGO/CONTACT

martinez ARCHITECTS

Martinez Architect, LP
900 Rockmead, Suite 250
Houston, Texas 77339
281.346.7371

DESIGN TEAM

Architectural
Martinez Architects

Civil Engineer
Maverick Engineering

Structural
Matrix Structural Engineers

M/E/P/T
DBR

Landscape Architect
KDC Associates

FIRE STATION #5

CITY OF MIDLAND
2210 W GOLF COURSE RD
MIDLAND, TX 79701

PROJECT No: **MA 18017**
DATE: **16-JAN-2020**

ISSUE

75% CONSTRUCTION DOCUMENT
26-JUN-2019

100% ISSUE FOR PERMIT
30-JUL-2019

100% ISSUE FOR APPROVAL TO BID
16-JAN-2020

WALL SECTIONS

A 503

ENLARGED PLAN GENERAL NOTES

A. INSTALL CURBS AT NON-ACCESSIBLE SHOWERS.
B. INSTALL ALL PLUMBING ACCESS PANELS NOT TO CONFLICT W/ TOILET ACCESSORIES.
C. COORDINATE ALL TOILET ACCESSORIES AND INSTALLATION w/ ARCHITECT/OWNER. ALL ACCESSORIES TO HAVE TUMBLER LATCH KNOB (NO KEYED LOCKS)
D. SHEET G001 FOR TYPICAL ACCESSIBLE DIMENSIONS & MOUNTING HEIGHTS.

FLOOR PLAN KEYED NOTES

1 MIRROR - 24"W x 36"H
2 SHOWER CURTAIN, ROD & HOOKS
3 SHOWER SHELF
4 TWO CLOTHING HOOKS
5 SHOWER SHELF
6
7 WALL-MOUNTED LIQUID SOAP DISPENSER
8 TOILET PAPER DISPENSER (MOUNT @ 19" A.F.F.)
9 36" GRAB & 42" BAR w/ SLIP-RESISTANT SURFACE
10 CONTINUOUS SHOWER GRAB BAR w/ SLIP-RESISTANT SURFACE
11 PAPER TOWEL DISPENSER/RECEPTACLE - PROVIDED BY OWNER
12 EXTRA LENGTH MURPHY BED (O.F.C.I.). CONTRACTOR TO VERIFY SIZE REQUIREMENTS OF BED w/ OWNER PRIOR TO INSTALLATION. CONTRACTOR SHALL ENSURE THAT BED INSTALLATION PROVIDES FLUSH TRANSITION BETWEEN BED AND ADJACENT WALL WHEN BED IS IN FOLDED POSITION
13 OFFICE FURNITURE (O.F.C.I.). CONTRACTOR TO COORDINATE AND PROVIDE BLOCKING IN WALL AS REQUIRED TO ADEQUATELY SUPPORT FURNITURE
14 1-TIER P-LAM STORAGE LOCKERS

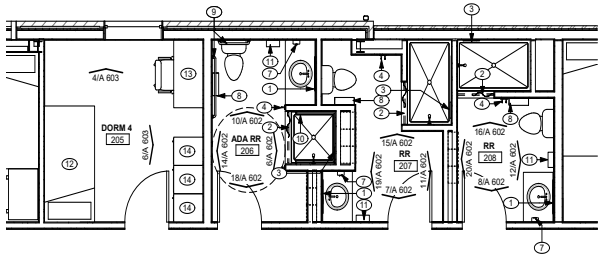

3 RESTROOMS 206, 207, 208
SCALE: 1/4" = 1'-0"

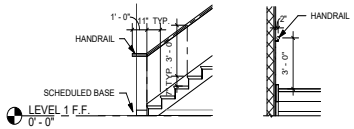

5 TYP. STAIR DETAILS
SCALE: 1/4" = 1'-0"

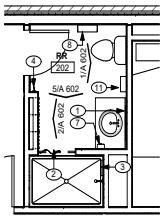

2 RESTROOM 202
SCALE: 1/4" = 1'-0"

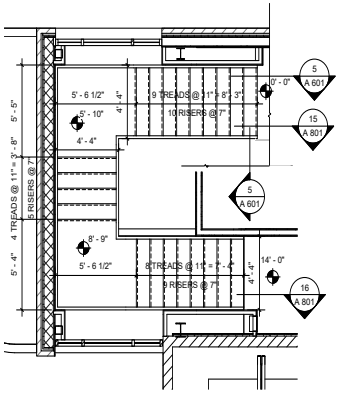

7 STAIR @ MAIN ENTRANCE
SCALE: 1/4" = 1'-0"

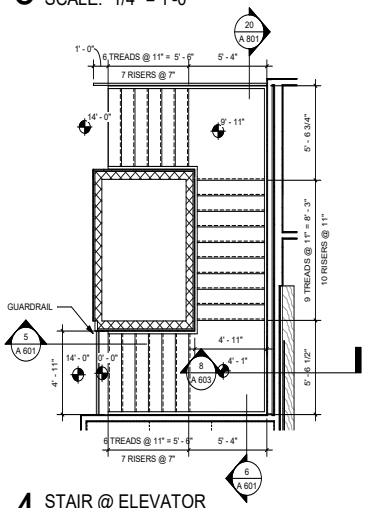

4 STAIR @ ELEVATOR
SCALE: 1/4" = 1'-0"

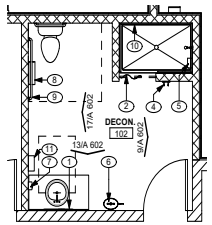

1 DECON 102
SCALE: 1/4" = 1'-0"

PROFESSIONAL SEAL

REGISTERED ARCHITECT
JUSTIN E. MYERS
24640
STATE OF TEXAS

LOGO/CONTACT

martinez ARCHITECTS

Martinez Architect, LP
900 Rockmead, Suite 250
Houston, Texas 77339
281.346.7371

DESIGN TEAM

Architectural
Martinez Architects

Civil Engineer
Maverick Engineering

Structural
Matrix Structural Engineers

M/E/P/T
DBR

Landscape Architect
KDC Associates

FIRE STATION #5

CITY OF MIDLAND
2210 W GOLF COURSE RD
MIDLAND, TX 79701

PROJECT No: **MA 18017**
DATE: **16-JAN-2020**

ISSUE

75% CONSTRUCTION DOCUMENT
26-JUN-2019

100% ISSUE FOR PERMIT
30-JUL-2019

100% ISSUE FOR APPROVAL TO BID
16-JAN-2020

ENLARGED FLOOR PLANS

A 601

4.1256

ENLARGED PLAN GENERAL NOTES

A. INSTALL CURBS AT NON-ACCESSIBLE SHOWERS.
B. INSTALL ALL PLUMBING ACCESS PANELS NOT TO CONFLICT W/ TOILET ACCESSORIES.
C. COORDINATE ALL TOILET ACCESSORIES AND INSTALLATION w/ ARCHITECT/OWNER. ALL ACCESSORIES TO HAVE TUMBLER LATCH KNOB (NO KEYED LOCKS)
D. SHEET G001 FOR TYPICAL ACCESSIBLE DIMENSIONS & MOUNTING HEIGHTS.

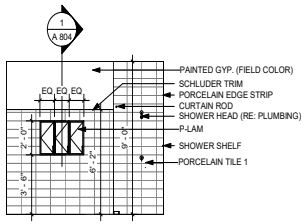

20 RESTROOM 208
SCALE: 1/4" = 1'-0"

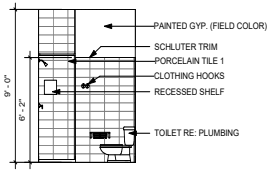

16 RESTROOM 208
SCALE: 1/4" = 1'-0"

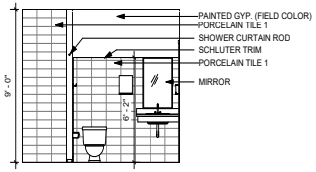

12 RESTROOM 208
SCALE: 1/4" = 1'-0"

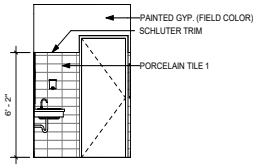

8 RESTROOM 208
SCALE: 1/4" = 1'-0"

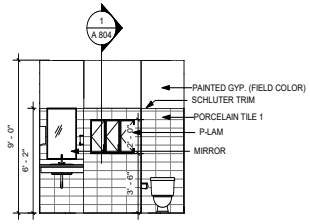

19 RESTROOM 207
SCALE: 1/4" = 1'-0"

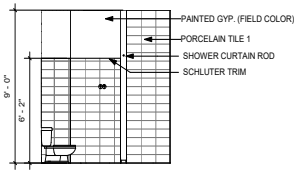

15 RESTROOM 207
SCALE: 1/4" = 1'-0"

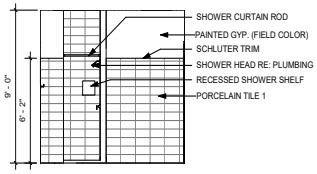

11 RESTROOM 207
SCALE: 1/4" = 1'-0"

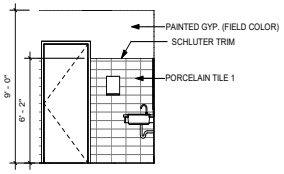

7 RESTROOM 207
SCALE: 1/4" = 1'-0"

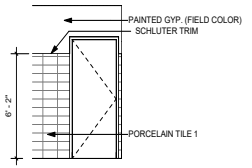

18 RESTROOM 206
SCALE: 1/4" = 1'-0"

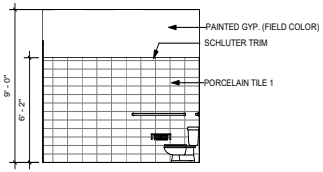

14 RESTROOM 206
SCALE: 1/4" = 1'-0"

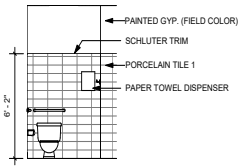

10 RESTROOM 206
SCALE: 1/4" = 1'-0"

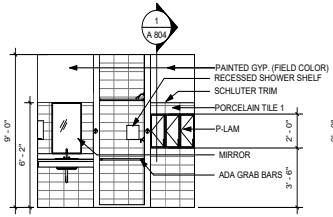

6 RESTROOM 206
SCALE: 1/4" = 1'-0"

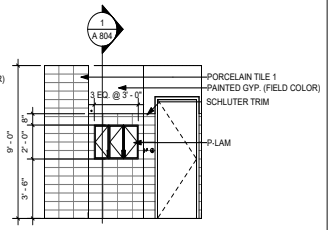

2 RESTROOM 202
SCALE: 1/4" = 1'-0"

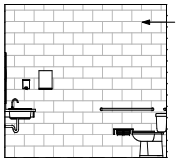

17 DECON
SCALE: 1/4" = 1'-0"

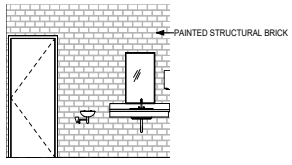

13 DECON
SCALE: 1/4" = 1'-0"

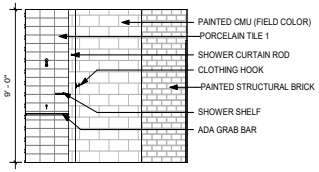

9 DECON
SCALE: 1/4" = 1'-0"

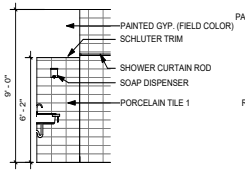

5 RESTROOM 202
SCALE: 1/4" = 1'-0"

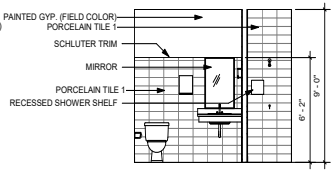

1 RESTROOM 202
SCALE: 1/4" = 1'-0"

4.1257

PROFESSIONAL SEAL

REGISTERED ARCHITECT JUSTIN E. MYERS 24840 STATE OF TEXAS

LOGO/CONTACT

martinez ARCHITECTS

Martinez Architect, LP
900 Rockmead, Suite 250
Houston, Texas 77339
281.346.7371

DESIGN TEAM

Architectural
Martinez Architects

Civil Engineer
Maverick Engineering

Structural
Matrix Structural Engineers

M/E/P/T
DBR

Landscape Architect
KDC Associates

FIRE STATION #5
CITY OF MIDLAND
2210 W GOLF COURSE RD
MIDLAND, TX 79701

PROJECT No: **MA 18017**
DATE: **16-JAN-2020**

ISSUE
75% CONSTRUCTION DOCUMENT 26-JUN-2019
100% ISSUE FOR PERMIT 30-JUL-2019
100% ISSUE FOR APPROVAL TO BID 16-JAN-2020

INTERIOR ELEVATIONS

A 602

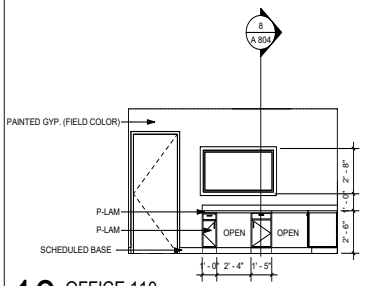

10 OFFICE 110
SCALE: 1/4" = 1'-0"

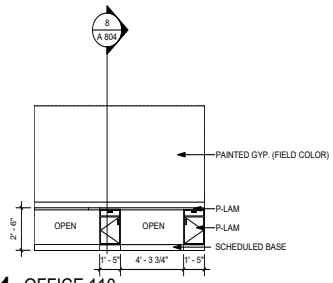

11 OFFICE 110
SCALE: 1/4" = 1'-0"

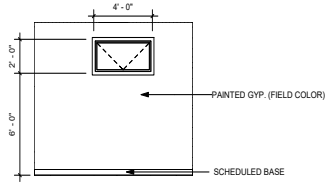

4 DORM 205 - 1
SCALE: 1/4" = 1'-0"

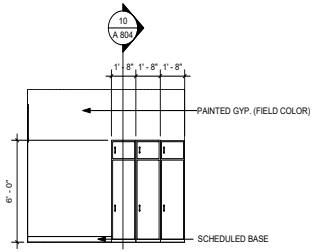

6 DORM 205 - 2
SCALE: 1/4" = 1'-0"

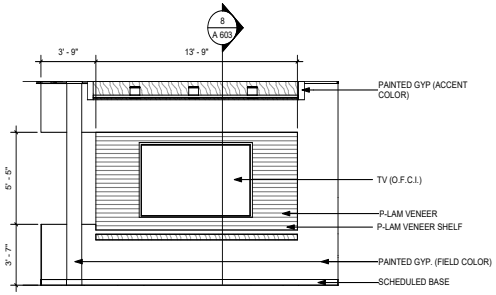

7 DAY ROOM ELEVATION
SCALE: 1/4" = 1'-0"

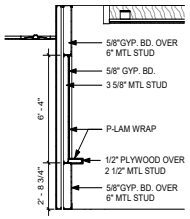

8 DAY ROOM SECTION
SCALE: 1/4" = 1'-0"

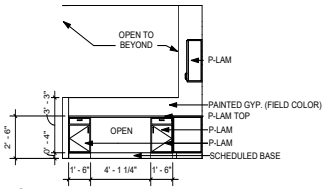

1 WORK STATIONS
SCALE: 1/4" = 1'-0"

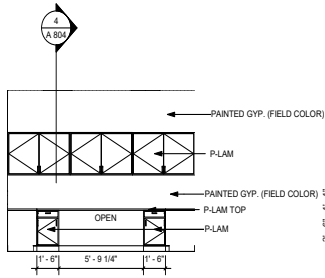

2 WORK STATIONS
SCALE: 1/4" = 1'-0"

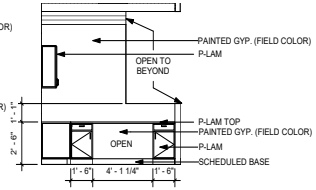

3 WORK STATIONS
SCALE: 1/4" = 1'-0"

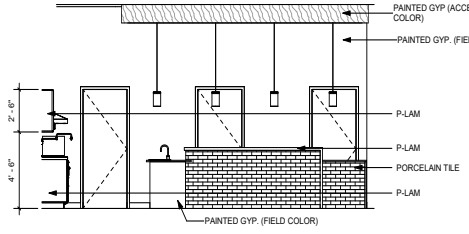

18 KITCHEN
SCALE: 1/4" = 1'-0"

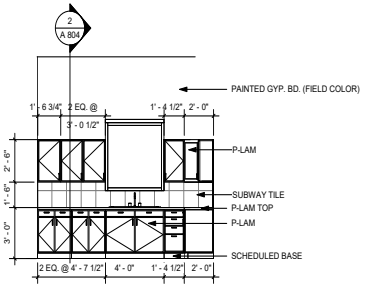

17 KITCHEN
SCALE: 1/4" = 1'-0"

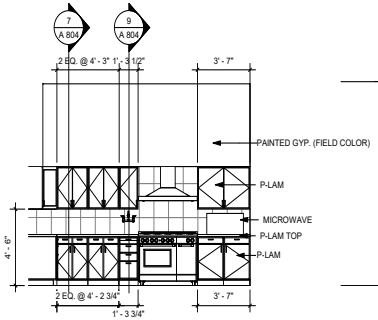

13 KITCHEN
SCALE: 1/4" = 1'-0"

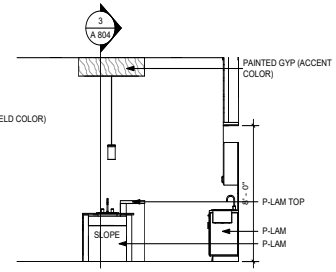

9 KITCHEN
SCALE: 1/4" = 1'-0"

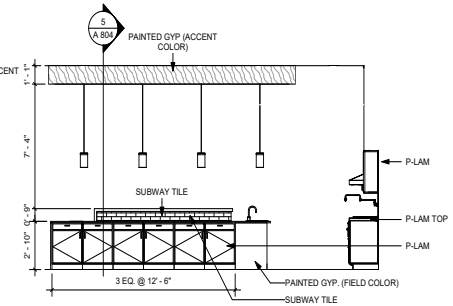

5 KITCHEN
SCALE: 1/4" = 1'-0"

4.1258

PROFESSIONAL SEAL

REGISTERED ARCHITECT JUSTIN E. MYERS 24640 STATE OF TEXAS

LOGO/CONTACT

martinez ARCHITECTS

Martinez Architect, LP
900 Rockmead, Suite 250
Houston, Texas 77339
281.346.7371

DESIGN TEAM

Architectural
Martinez Architects

Civil Engineer
Maverick Engineering

Structural
Matrix Structural Engineers

M/E/P/T
DBR

Landscape Architect
KDC Associates

FIRE STATION #5

CITY OF MIDLAND
2210 W GOLF COURSE RD
MIDLAND, TX 79701

PROJECT No: **MA 18017**
DATE: **16-JAN-2020**

ISSUE

75% CONSTRUCTION DOCUMENT
26-JUN-2019

100% ISSUE FOR PERMIT
30-JUL-2019

100% ISSUE FOR APPROVAL TO BID
16-JAN-2020

INTERIOR ELEVATIONS

A 603

CEILING PLAN LEGEND

10'-6"	CEILING HEIGHT A.F.F. (RE: A901 FOR FULL SCHEDULE)
	2'X2' LAY-IN ACCOUSTICAL PANELS
	2'X2' LAY-IN SCRUBBABLE CERAMIC ACCOUSTICAL PANELS
	5/8" TYPE X GYPSUM BOARD OR 1/2" HIGHT STRENGTH CEILING BOARD
	PRE-FINISHED ALUMINUM CANOPY
	SUSPENDED CEILING CANOPY
	PRE-FIN. ALUMINUM SUN-SHADE AWNING
	LIGHT FIXTURES (RE: ELECTRICAL)

GENERAL CEILING PLAN NOTES

A. SEE SHEET A901 FOR ROOM FINISH SCHEDULE.
B. SEE SHEET A204 FOR PARTITION TYPES.
C. ALL CEILING SHALL BE 9'-0" A.F.F. UNLESS NOTED OTHERWISE
D. REFERENCE MEP FOR ELEC. FIXTURES AND MECH. EQUIPMENT. COORDINATE WITH ARCH. ALL DISCREPANCIES PRIOR TO INSTALLATION.
E. FRAME GYP. BD. FURRDOWNS w/ 3-5/8" MTL. STUDS @ 16" O.C., BRACED TO WALL AND ROOF STRUCTURE.
F. HVLS FAN TO BE INCLUDED IN BASE BID
G. PROVIDE LIGHT-KITS FOR CEILING FANS IN DORMS

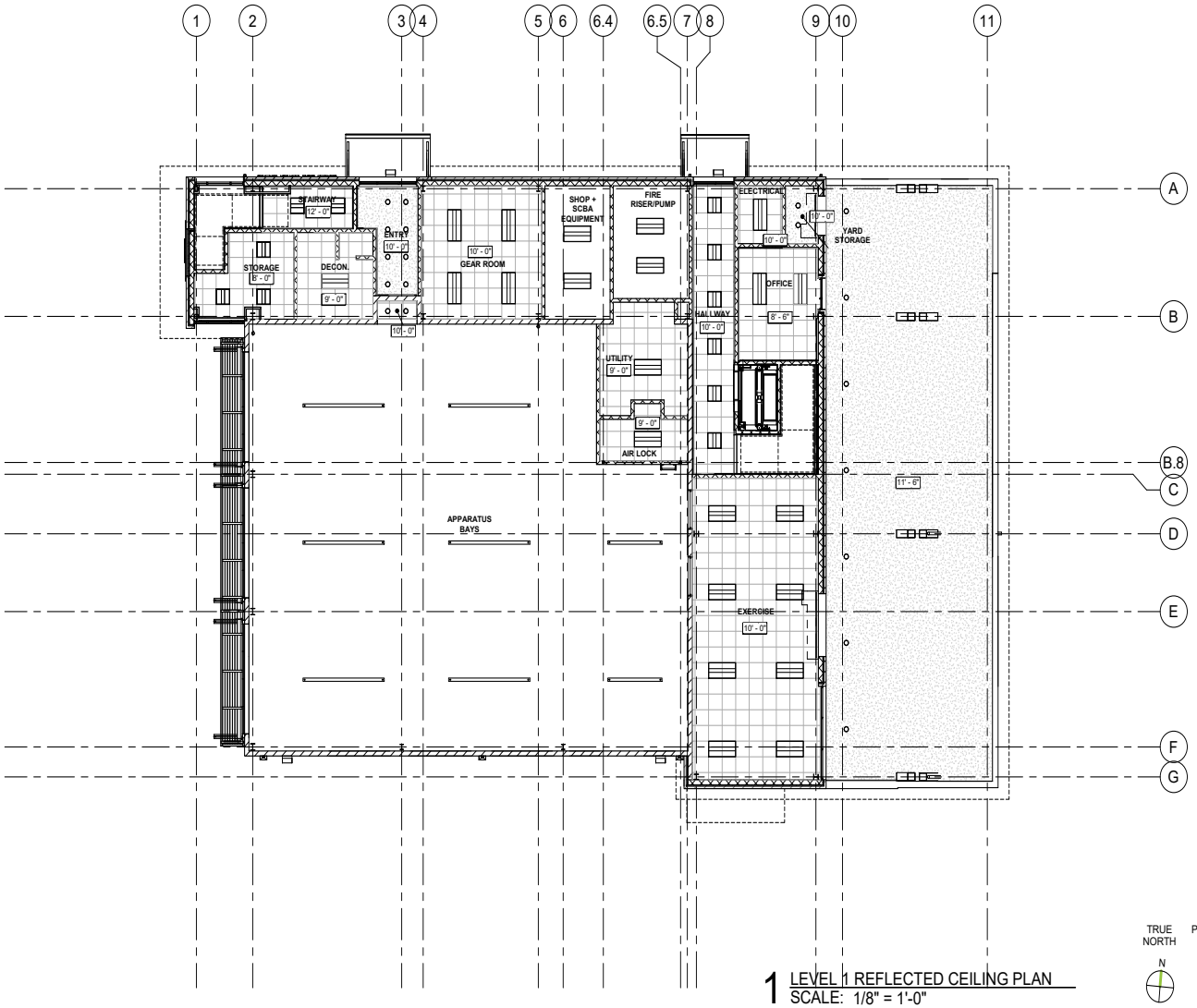

1 LEVEL 1 REFLECTED CEILING PLAN
SCALE: 1/8" = 1'-0"

TRUE NORTH N
PROJECT NORTH N

4.1259

PROFESSIONAL SEAL

REGISTERED ARCHITECT JUSTIN E. MYERS 24640 STATE OF TEXAS

LOGO/CONTACT

martinez ARCHITECTS

Martinez Architect, LP
900 Rockmead, Suite 250
Houston, Texas 77339
281.346.7371

DESIGN TEAM

Architectural
Martinez Architects

Civil Engineer
Maverick Engineering

Structural
Matrix Structural Engineers

M/E/P/T
DBR

Landscape Architect
KDC Associates

FIRE STATION #5

CITY OF MIDLAND
2210 W GOLF COURSE RD
MIDLAND, TX 79701

PROJECT No: MA 18017
DATE: 16-JAN-2020

ISSUE

75% CONSTRUCTION DOCUMENT
26-JUN-2019

100% ISSUE FOR PERMIT
30-JUL-2019

100% ISSUE FOR APPROVAL TO BID
16-JAN-2020

LEVEL 1 REFLECTED CEILING PLAN

A 701

CEILING PLAN LEGEND

- 10'-6" — CEILING HEIGHT A.F.F. (RE: A901 FOR FULL SCHEDULE)
- 2'X2' LAY-IN ACCOUSTICAL PANELS
- 2'X2' LAY-IN SCRUBBABLE CERAMIC ACCOUSTICAL PANELS
- 5/8" TYPE X GYPSUM BOARD OR 1/2" HIGHT STRENGTH CEILING BOARD
- PRE-FINISHED ALUMINUM CANOPY
- SUSPENDED CEILING CANOPY
- PRE-FIN. ALUMINUM SUN-SHADE AWNING
- LIGHT FIXTURES (RE: ELECTRICAL)

GENERAL CEILING PLAN NOTES

A. SEE SHEET A901 FOR ROOM FINISH SCHEDULE.
B. SEE SHEET A204 FOR PARTITION TYPES.
C. ALL CEILING SHALL BE 9'-0" A.F.F. UNLESS NOTED OTHERWISE
D. REFERENCE MEP FOR ELEC. FIXTURES AND MECH. EQUIPMENT. COORDINATE WITH ARCH. ALL DISCREPANCIES PRIOR TO INSTALLATION.
E. FRAME GYP. BD. FURRDOWNS w/ 3-5/8" MTL. STUDS @ 16" O.C., BRACED TO WALL AND ROOF STRUCTURE.
F. HVLS FAN TO BE INCLUDED IN BASE BID
G. PROVIDE LIGHT-KITS FOR CEILING FANS IN DORMS

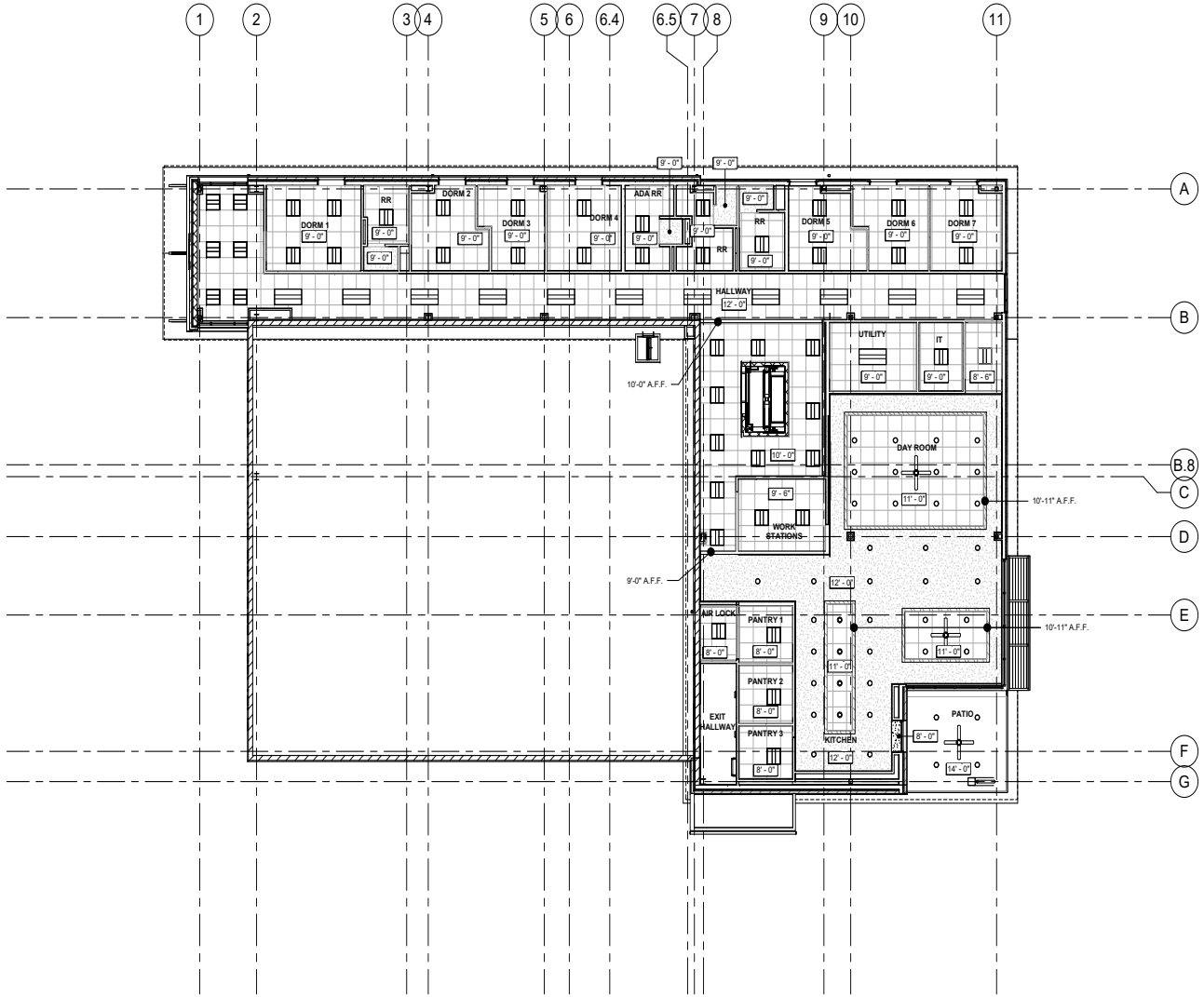

01 LEVEL 2 REFLECTED CEILING PLAN
SCALE: 1/8" = 1'-0"

TRUE NORTH N
PROJECT NORTH N

PROFESSIONAL SEAL
REGISTERED ARCHITECT JUSTIN E. MYERS 24840 STATE OF TEXAS

LOGO/CONTACT

martinez ARCHITECTS

Martinez Architect, LP
900 Rockmead, Suite 250
Houston, Texas 77339
281.346.7371

DESIGN TEAM

Architectural
Martinez Architects

Civil Engineer
Maverick Engineering

Structural
Matrix Structural Engineers

M/E/P/T
DBR

Landscape Architect
KDC Associates

FIRE STATION #5
CITY OF MIDLAND
2210 W GOLF COURSE RD
MIDLAND, TX 79701

PROJECT No: **MA 18017**
DATE: **16-JAN-2020**

ISSUE
75% CONSTRUCTION DOCUMENT 26-JUN-2019
100% ISSUE FOR PERMIT 30-JUL-2019
100% ISSUE FOR APPROVAL TO BID 16-JAN-2020

LEVEL 2 REFLECTED CEILING PLAN

A 702

4.1260

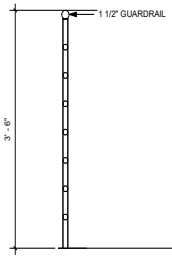

20 GUARDRAIL
SCALE: 1" = 1'-0"

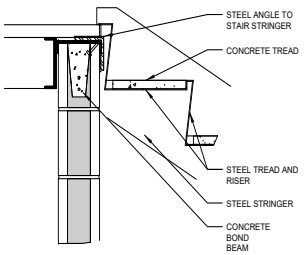

16 STAIR TOP CONNECTION
SCALE: 1 1/2" = 1'-0"

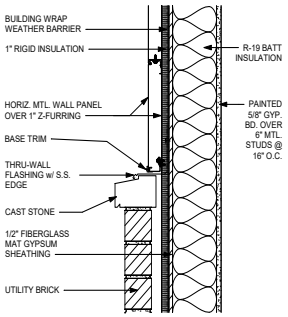

12 CAST STONE LINTEL DTL.
SCALE: 1 1/2" = 1'-0"

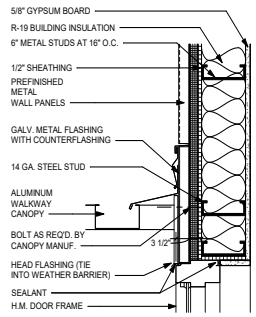

8 DOOR HEAD DTL. @ CANOPY
SCALE: 1 1/2" = 1'-0"

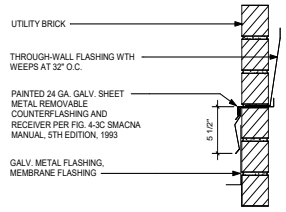

4 WALL FLASHING DTL.
SCALE: 1 1/2" = 1'-0"

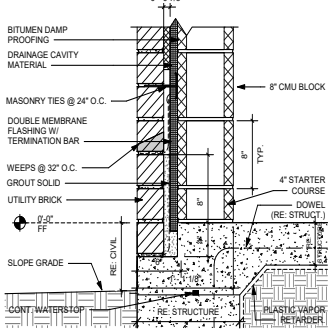

19 LEDGE: BRICK @ CMU
SCALE: 1 1/2" = 1'-0"

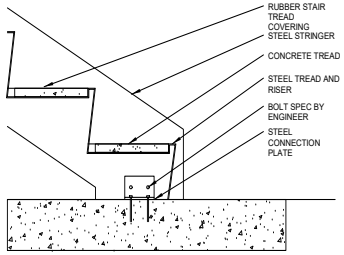

15 STAIR BOTTOM CONNECTION
SCALE: 1 1/2" = 1'-0"

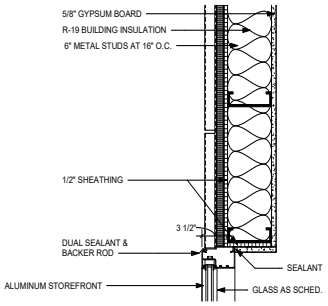

11 WINDOW HEAD DTL.
SCALE: 1 1/2" = 1'-0"

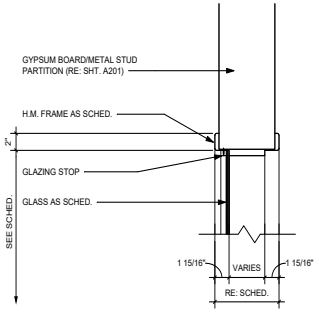

7 INT. DOOR JAMB DTL.
SCALE: 1 1/2" = 1'-0"

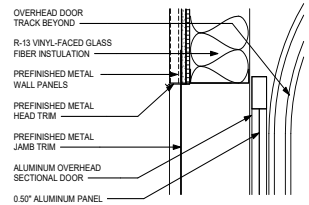

3 OVERHEAD DOOR HEAD DTL.
SCALE: 1 1/2" = 1'-0"

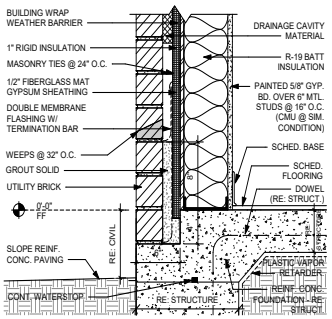

18 LEDGE: BRICK @ MTL. STUDS
SCALE: 1 1/2" = 1'-0"

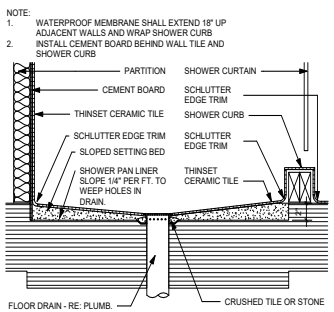

14 SHOWER CURB
SCALE: 1 1/2" = 1'-0"

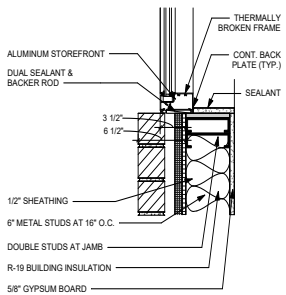

10 WINDOW JAMB DTL.
SCALE: 1 1/2" = 1'-0"

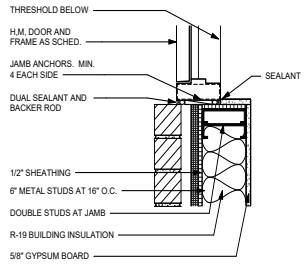

6 DOOR JAMB DTL.
SCALE: 1 1/2" = 1'-0"

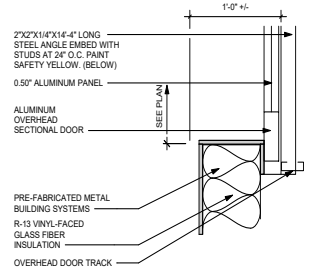

2 DOOR JAMB DTL.
SCALE: 1 1/2" = 1'-0"

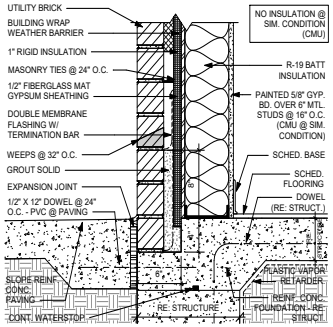

17 BRICK @ ADJ. EXT. CONCRETE
SCALE: 1 1/2" = 1'-0"

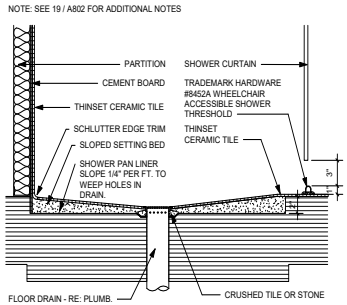

13 ADA SHOWER CURB
SCALE: 1 1/2" = 1'-0"

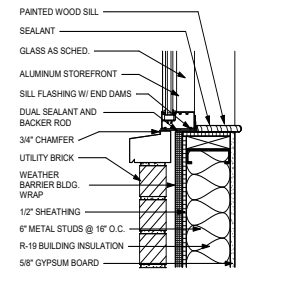

9 WINDOW SILL @ BRICK VENEER
SCALE: 1 1/2" = 1'-0"

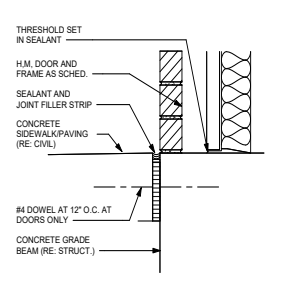

5 DOOR SILL DTL.
SCALE: 1 1/2" = 1'-0"

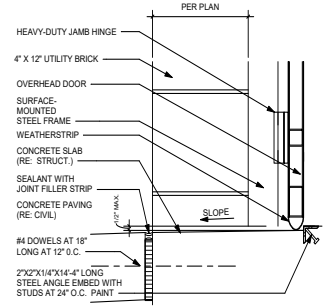

1 OVERHEAD DOOR SILL DTL.
SCALE: 1 1/2" = 1'-0"

4.1261

PROFESSIONAL SEAL

REGISTERED ARCHITECT JUSTIN E. MYERS 24840 STATE OF TEXAS

LOGO/CONTACT

martinez ARCHITECTS

Martinez Architect, LP
900 Rockmead, Suite 250
Houston, Texas 77339
281.346.7371

DESIGN TEAM

Architectural
Martinez Architects

Civil Engineer
Maverick Engineering

Structural
Matrix Structural Engineers

M/E/P/T
DBR

Landscape Architect
KDC Associates

FIRE STATION #5

CITY OF MIDLAND
2210 W GOLF COURSE RD
MIDLAND, TX 79701

PROJECT No: **MA 18017**
DATE: **16-JAN-2020**

ISSUE
75% CONSTRUCTION DOCUMENT 26-JUN-2019
100% ISSUE FOR PERMIT 30-JUL-2019
100% ISSUE FOR APPROVAL TO BID 16-JAN-2020

EXTERIOR DETAILS

A 801

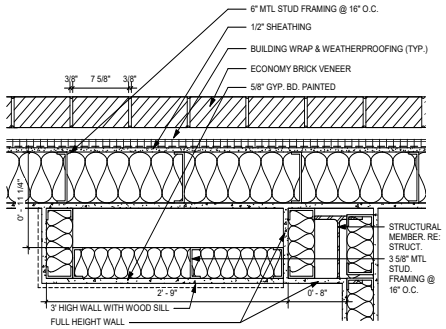

3 ENLARGED PLAN DETAIL
SCALE: 1 1/2" = 1'-0"

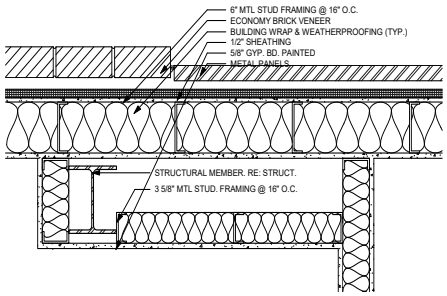

4 ENLARGED PLAN DETAIL
SCALE: 1 1/2" = 1'-0"

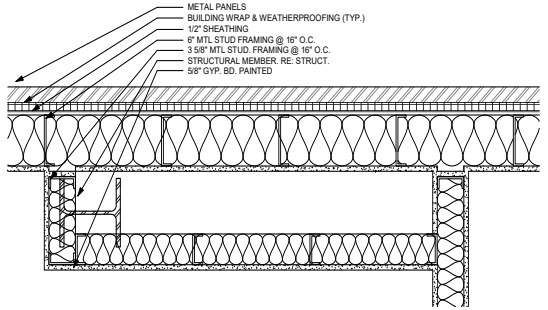

5 ENLARGED PLAN DETAIL
SCALE: 1 1/2" = 1'-0"

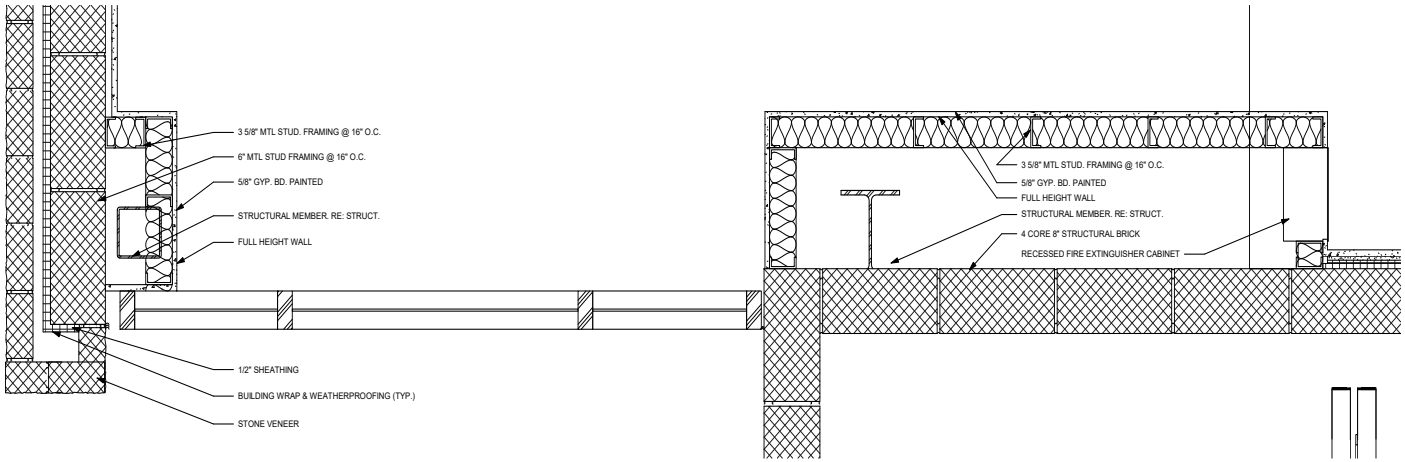

7 ENLARGED PLAN DETAIL
SCALE: 1 1/2" = 1'-0"

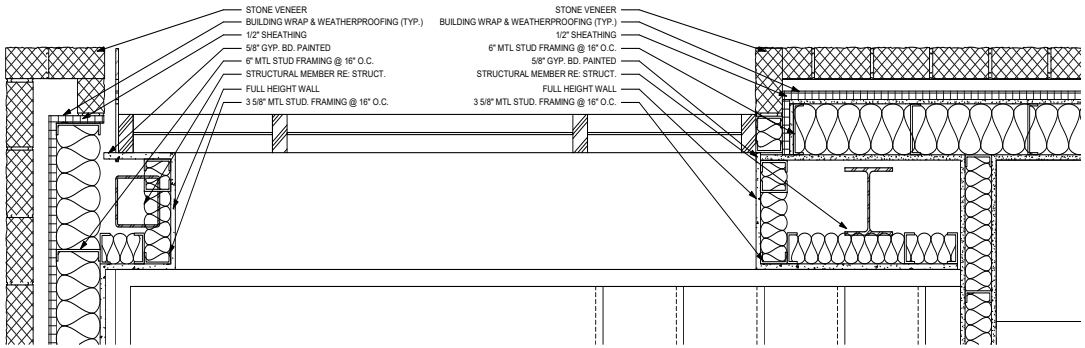

1 ENLARGED PLAN DETAIL
SCALE: 1 1/2" = 1'-0"

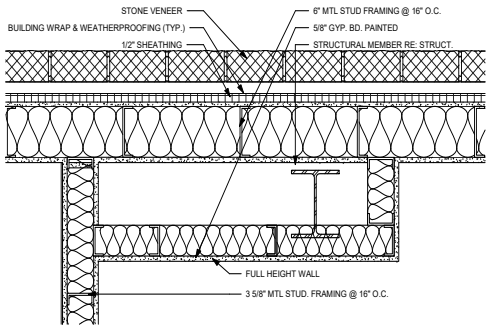

2 ENLARGED PLAN DETAIL
SCALE: 1 1/2" = 1'-0"

4.1262

PROFESSIONAL SEAL

REGISTERED ARCHITECT
JUSTIN E. MYERS
24840
STATE OF TEXAS

LOGO/CONTACT

martinez ARCHITECTS

Martinez Architect, LP
900 Rockmead, Suite 250
Houston, Texas 77339
281.346.7371

DESIGN TEAM

Architectural
Martinez Architects

Civil Engineer
Maverick Engineering

Structural
Matrix Structural Engineers

M/E/P/T
DBR

Landscape Architect
KDC Associates

FIRE STATION #5
CITY OF MIDLAND
2210 W GOLF COURSE RD
MIDLAND, TX 79701

PROJECT No: **MA 18017**
DATE: **16-JAN-2020**

ISSUE
75% CONSTRUCTION DOCUMENT
26-JUN-2019
100% ISSUE FOR PERMIT
30-JUL-2019
100% ISSUE FOR APPROVAL TO BID
16-JAN-2020

PLAN DETAILS

A 802

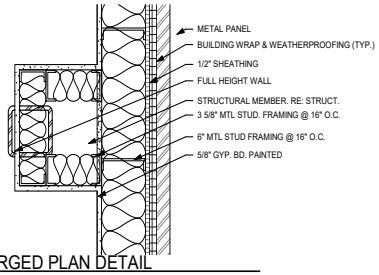

9 ENLARGED PLAN DETAIL
SCALE: 1 1/2" = 1'-0"

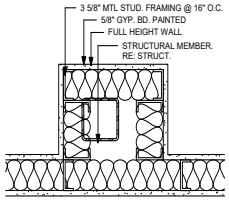

5 ENLARGED PLAN DETAIL
SCALE: 1 1/2" = 1'-0"

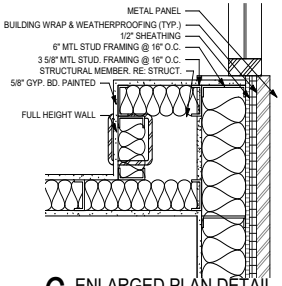

6 ENLARGED PLAN DETAIL
SCALE: 1 1/2" = 1'-0"

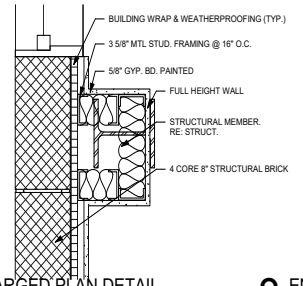

7 ENLARGED PLAN DETAIL
SCALE: 1 1/2" = 1'-0"

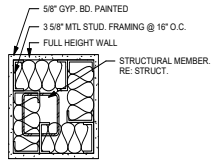

8 ENLARGED PLAN DETAIL
SCALE: 1 1/2" = 1'-0"

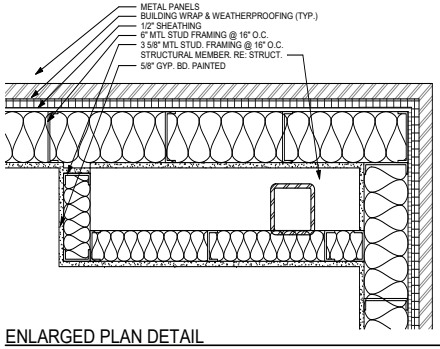

1 ENLARGED PLAN DETAIL
SCALE: 1 1/2" = 1'-0"

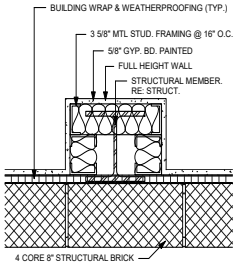

2 ENLARGED PLAN DETAIL
SCALE: 1 1/2" = 1'-0"

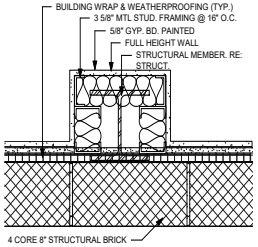

3 ENLARGED PLAN DETAIL
SCALE: 1 1/2" = 1'-0"

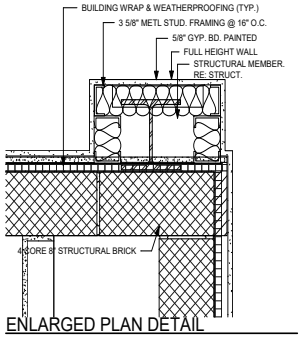

4 ENLARGED PLAN DETAIL
SCALE: 1 1/2" = 1'-0"

4.1263

PROFESSIONAL SEAL

REGISTERED ARCHITECT
JUSTIN E. MYERS
24640
STATE OF TEXAS

LOGO/CONTACT

martinez ARCHITECTS

Martinez Architect, LP
900 Rockmead, Suite 250
Houston, Texas 77339
281.346.7371

DESIGN TEAM

Architectural
Martinez Architects

Civil Engineer
Maverick Engineering

Structural
Matrix Structural Engineers

M/E/P/T
DBR

Landscape Architect
KDC Associates

FIRE STATION #5
CITY OF MIDLAND
2210 W GOLF COURSE RD
MIDLAND, TX 79701

PROJECT No: **MA 18017**
DATE: **16-JAN-2020**

ISSUE
75% CONSTRUCTION DOCUMENT 26-JUN-2019
100% ISSUE FOR PERMIT 30-JUL-2019
100% ISSUE FOR APPROVAL TO BID 16-JAN-2020

PLAN DETAILS

A 803

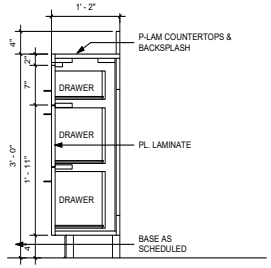

9 DRAWERS @ KITCHEN
SCALE: 1" = 1'-0"

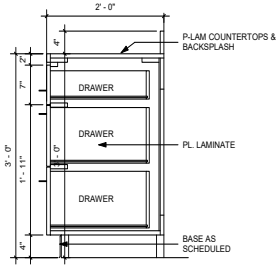

6 DRAWERS @ SHOP
SCALE: 1" = 1'-0"

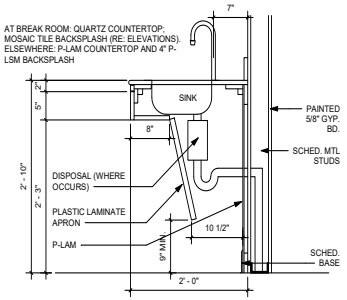

3 SINK W/ SLOPED BASE
SCALE: 1" = 1'-0"

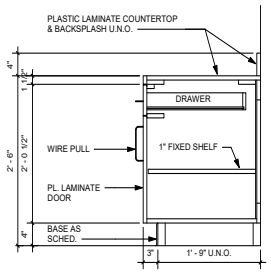

8 BASE CABINETS @ OFFICE
SCALE: 1" = 1'-0"

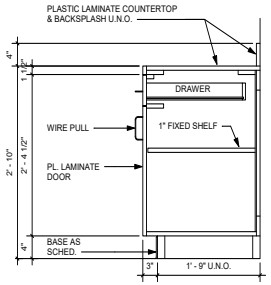

5 ADA BASE CABINETS
SCALE: 1" = 1'-0"

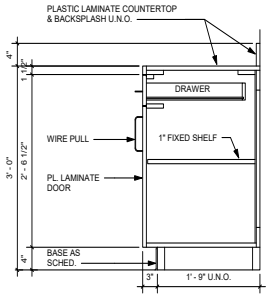

2 BASE CABINETS
SCALE: 1" = 1'-0"

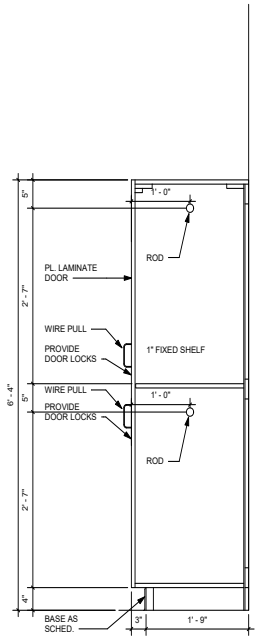

10 WARDROBE LOCKER
SCALE: 1" = 1'-0"

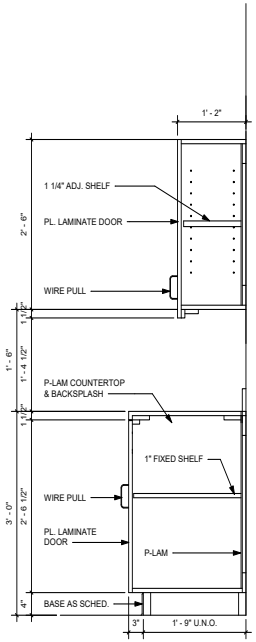

7 UPPER/LOWER CABINETS
SCALE: 1" = 1'-0"

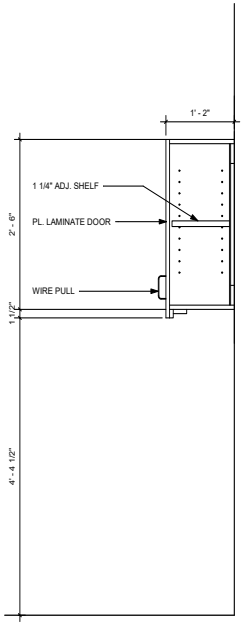

4 WORK @ STATION CABINETS
SCALE: 1" = 1'-0"

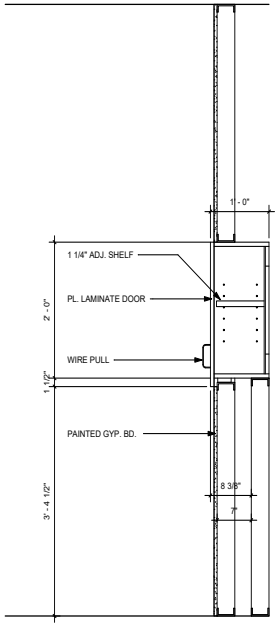

1 BATHROOM CABINETS
SCALE: 1" = 1'-0"

4.1264

PROFESSIONAL SEAL

REGISTERED ARCHITECT JUSTIN E. MYERS 24840 STATE OF TEXAS

LOGO/CONTACT

martinez ARCHITECTS

Martinez Architect, LP
900 Rockmead, Suite 250
Houston, Texas 77339
281.346.7371

DESIGN TEAM

Architectural
Martinez Architects

Civil Engineer
Maverick Engineering

Structural
Matrix Structural Engineers

M/E/P/T
DBR

Landscape Architect
KDC Associates

FIRE STATION #5

CITY OF MIDLAND
2210 W GOLF COURSE RD
MIDLAND, TX 79701

PROJECT No: **MA 18017**
DATE: **16-JAN-2020**

ISSUE

75% CONSTRUCTION DOCUMENT
26-JUN-2019

100% ISSUE FOR PERMIT
30-JUL-2019

100% ISSUE FOR APPROVAL TO BID
16-JAN-2020

MILLWORK DETAILS

A 804

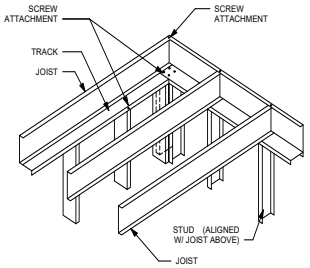

4 TYPICAL FLOOR FRAMING
SCALE: 1 1/2" = 1'-0"

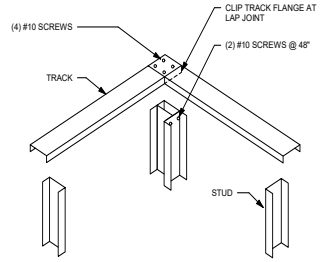

3 FRAMING @ CORNER
SCALE: 1 1/2" = 1'-0"

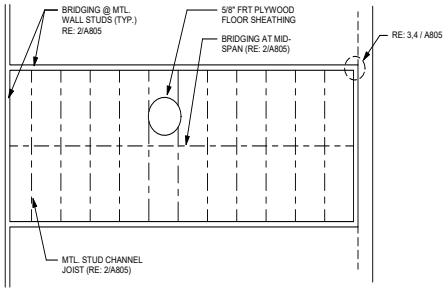

2 STRUCTURAL STUD & PLYWOOD MEZZANINE
SCALE: 1 1/2" = 1'-0"

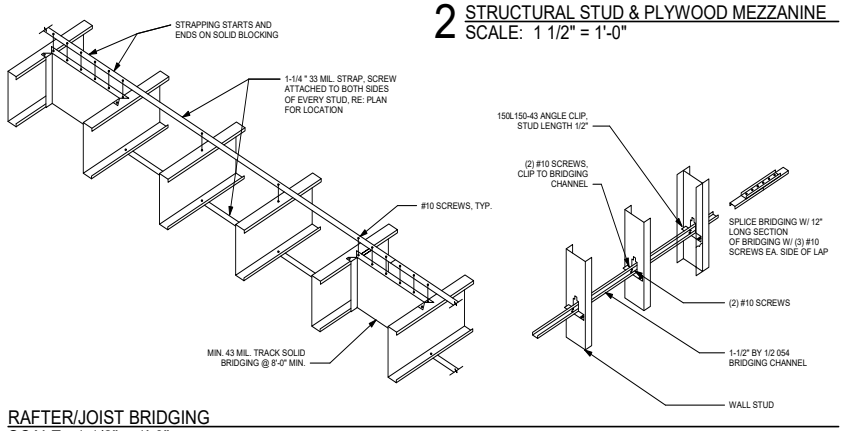

1 RAFTER/JOIST BRIDGING
SCALE: 1 1/2" = 1'-0"

PROFESSIONAL SEAL

REGISTERED ARCHITECT JUSTIN E. MYERS 24640 STATE OF TEXAS

LOGO/CONTACT

martinez ARCHITECTS

Martinez Architect, LP
900 Rockmead, Suite 250
Houston, Texas 77339
281.346.7371

DESIGN TEAM

Architectural
Martinez Architects

Civil Engineer
Maverick Engineering

Structural
Matrix Structural Engineers

M/E/P/T
DBR

Landscape Architect
KDC Associates

FIRE STATION #5
CITY OF MIDLAND
2210 W GOLF COURSE RD
MIDLAND, TX 79701

PROJECT No: **MA 18017**
DATE: **16-JAN-2020**

ISSUE

75% CONSTRUCTION DOCUMENT 26-JUN-2019
100% ISSUE FOR PERMIT 30-JUL-2019
100% ISSUE FOR APPROVAL TO BID 16-JAN-2020

MEZZANINE FRAMING DETAILS

A 805

4.1265

FINISH SCHEDULE

#	ROOM NAME	FLOOR								BASE		WALL								CEILING FINISH				HEIGHT	FINISH REMARKS
		CARPET TILE	PORCELAIN TILE - 1	PORCELAIN TILE - 2	LUXURY VINYL TILE - 1	LUXURY VINYL TILE - 2	ABRASION & SLIP RESISTANT CONCRETE FLOOR FINISH	SEALED CONCRETE	RUBBER ATHLETIC FLOORING	VULCANIZED RUBBER COVER BASE	PORCALAIN TILE COVE BASE	PAINT ON CMU/ STRUCTURAL BRICK (FIELD COLOR)	PAINT ON GYP. BD.(FIELD COLOR)	PAINT ON GYP. BD. (ACCENT COLOR)	METAL LINER PANELS (PRE-FINISHED)	PORCELAIN WALL TILE (FIELD)	PORCELAIN MOSAIC WALL TILE (ACCENT)	FIBER-REINFORCED PLASTIC	PAINT ON WATER-RESISTANT/FIRE RATED PLYWOOD	TEGULAR EDGED LAY-IN ACOUSTICAL PANEL (WHITE)	SQUARE EDGED LAY-IN SCRUBBABLE CERAMIC ACOUSTICAL PANEL (WHITE)	PAINTED GYPSUM BOARD	PAINTED EXPOSED STRUCTURE & MEP		
101	ENTRY				•					•			•								•				10' - 0"	
102	DECON.						•					•										•			9' - 0"	
103	STORAGE						•					•										•			8' - 0"	
104	GEAR ROOM						•					•										•			10' - 0"	
105	SHOP + SCBA EQUIPMENT						•					•												•	13' - 7"	
106	FIRE RISER/PUMP						•					•												•	13' - 7"	NO CEILING: PAINTED EXPOSED STRUCTURE.
107	ELECTRICAL							•				•												•	10' - 0"	
108	STAIRWAY				•					•			•								•				12' - 0"	
109	YARD STORAGE						•					•												•	10' - 0"	
110	OFFICE				•					•			•								•				10' - 0"	
111	HALLWAY				•					•			•								•				10' - 0"	
112	UTILITY						•					•												•	10' - 0"	
113	AIR LOCK						•					•										•			10' - 0"	
114	APPARATUS BAYS						•					•												•	20' - 3"	LOWEST POINT OF SLOPPED CEILING: 20'-3"
115	EXERCISE								•			•									•				10' - 0"	
201	DORM 1				•					•			•								•				9' - 0"	
202	RR										•		•									•	•		9' - 0"	
203	DORM 2				•					•			•								•				9' - 0"	
204	DORM 3				•					•			•								•				9' - 0"	
205	DORM 4				•					•			•								•				9' - 0"	
206	ADA RR				•						•		•									•	•		9' - 0"	
207	RR				•						•		•									•	•		9' - 0"	
208	RR				•						•		•									•	•		9' - 0"	
209	DORM 5				•					•			•								•				9' - 0"	
210	DORM 6				•					•			•								•				9' - 0"	
211	DORM 7				•					•			•								•				9' - 0"	
212	HALLWAY				•					•			•								•				12' - 0"	
213	UTILITY				•					•			•								•				9' - 0"	
214	IT				•					•			•								•				9' - 0"	
215	DAY ROOM				•					•			•								•		•		11' - 0"	11' CEILING FURR DOWN. RE: A702
216	WORK STATIONS				•																				9' - 6"	
217	AIR LOCK				•					•			•								•				8' - 0"	
218	EXIT HALLWAY				•					•			•								•				30' - 1"	LOWEST POINT OF BOTTOM OF ROOF: 30'-1"
219	PANTRY 1				•					•			•								•				8' - 0"	
220	PANTRY 2				•					•			•								•				8' - 0"	
221	PANTRY 3				•					•			•								•				8' - 0"	
222	KITCHEN				•					•			•								•		•		12' - 0"	
223	DINING ROOM				•					•			•								•		•		11' - 0"	
224	PATIO							•																•	14' - 0"	
225	STORAGE MEZZANINE							•					•											•	16' - 0"	LOWEST POINT OF SLOPED CEILING: 16'-0" FROM LEVEL 2
301	RAPPELLING LEVEL				•					•			•											•	7' - 6"	LOWEST POINT OF BOTTOM OF ROOF: 7' - 6"
302	RAPPELLING PLATFORM																								8' - 0"	

NOTES

1. All finish material colors/patterns/styles to be determined by architect from manufacturer's full range of colors. All hollow metal door frames shall be painted.
2. RE: Specifications for additional finish information & requirements.
3. All exposed steel framing (interior & exterior) shall be painted.
4. Provide corner guards at all outside gyp. bd. corners
5. All cabinets shall be wood laminated U.N.O.
6. All countertops shall be solid surface U.N.O.
7. RE: A701 for extent and height of ceiling furrdowns / transitions.
8. No wall base at interior masonry walls

PROFESSIONAL SEAL

REGISTERED ARCHITECT JUSTIN E. MYERS 24840 STATE OF TEXAS

LOGO/CONTACT

martinez ARCHITECTS

Martinez Architect, LP
900 Rockmead, Suite 250
Houston, Texas 77339
281.346.7371

DESIGN TEAM

Architectural
Martinez Architects

Civil Engineer
Maverick Engineering

Structural
Matrix Structural Engineers

M/E/P/T
DBR

Landscape Architect
KDC Associates

FIRE STATION #5

CITY OF MIDLAND
2210 W GOLF COURSE RD
MIDLAND, TX 79701

PROJECT No: **MA 18017**
DATE: **16-JAN-2020**

ISSUE

75% CONSTRUCTION DOCUMENT
26-JUN-2019

100% ISSUE FOR PERMIT
30-JUL-2019

100% ISSUE FOR APPROVAL TO BID
16-JAN-2020

FINISH SCHEDULE

A 901

4.1266

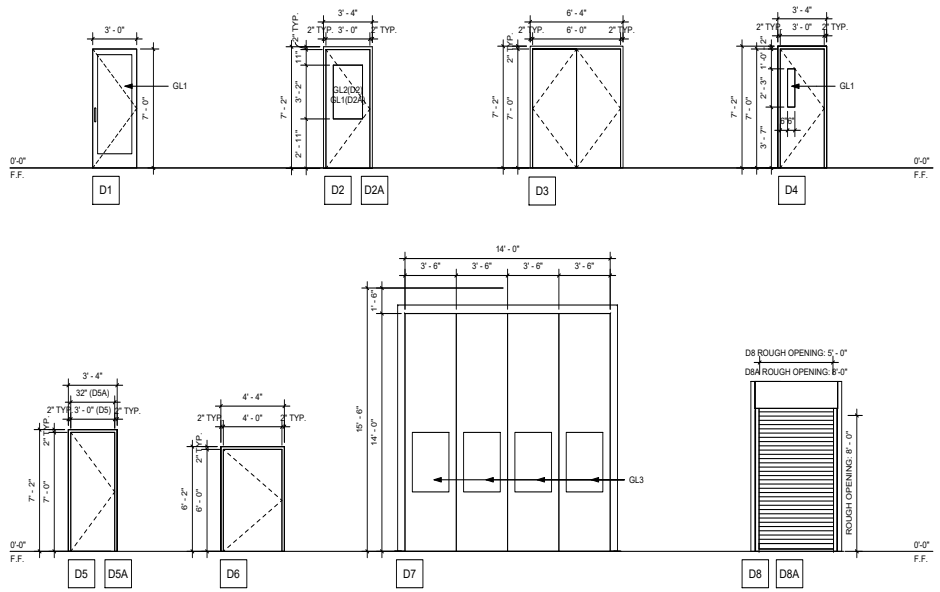

DOOR SCHEDULE

SCALE: 1/4" = 1'-0"

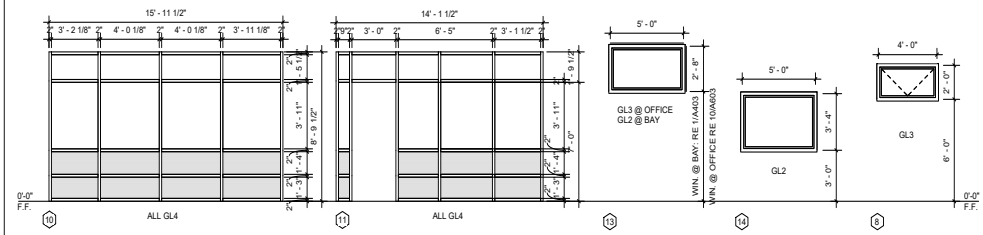

FRAME: Aluminum Storefront
WALL: Exterior Metal Stud
WIN. COVERING: -

FRAME: Aluminum Storefront
WALL: Exterior Metal Stud
WIN. COVERING: -

FRAME: Aluminum Storefront
WALL: Exterior Metal Stud, STRUCTURAL BRICK, CMU (RE: A201, A202)
WIN. COVERING: ONLY WINDOW TYPE 8

DOOR SCHEDULE

DOOR TAG	ROOM NAME: FROM ROOM: NAME	ROOM NAME: TO ROOM: NAME	DOOR TYPE	HARDWARE SET	THICKNESS	DOOR MATERIAL: ALUMINUM	DOOR MATERIAL: HOLLOW METAL (PAINTED)	DOOR MATERIAL: WOOD (P-LAM FACED) WILSONART "HAMPTON WALNUT"	DOOR MATERIAL: STEEL	FRAME MATERIAL: ALUMINUM	FRAME MATERIAL: HOLLOW METAL (PAINTED)	FRAME MATERIAL: STEEL	WALL TYPE ANCHOR: INTERIOR: 3-5/8" MTL STUD W/ 5/8" GYP BD	WALL TYPE ANCHOR: INTERIOR: 3-5/8" MTL STUD W/ 5/8" GYP BD - FIRE RATED	WALL TYPE ANCHOR: INTERIOR: 6" MTL. STUD ON 36" HIGH CMU BASE	WALL TYPE ANCHOR: INTERIOR: 6" CMU	WALL TYPE ANCHOR: EXTERIOR: EXTERIOR MTL. STUD	WALL TYPE ANCHOR: EXTERIOR: EXTERIOR 6" CMU	WALL TYPE ANCHOR: EXTERIOR: EXTERIOR 8" CMU	FIRE RATING	REMARKS
101 A	ENTRY	EXTERIOR	D1	D705 A	0' - 1 3/4"	•				•							•				
101 B	ENTRY	APPARATUS BAYS	D2	205	0' - 1 3/4"		•				•						•			20 MIN.	
101 C	ENTRY	STAIRWAY	D2A	711C	0' - 1 3/4"		•				•						•			20 MIN.	
102 A	APPARATUS BAYS	DECON.	D5	201	0' - 1 3/4"		•				•						•				
103 A	APPARATUS BAYS	STORAGE	D5	201	0' - 1 3/4"		•				•						•				
104 A	APPARATUS BAYS	GEAR ROOM	D5	505I	0' - 1 3/4"		•				•						•				
105 A	APPARATUS BAYS	SHOP + SCBA EQUIPMENT	D3	500S 1	0' - 1 3/4"		•				•						•				
106 A	FIRE RISER/PUMP	EXTERIOR	D3	D214	0' - 1 3/4"		•				•							•			
107 A	ELECTRICAL	HALLWAY	D5	201	0' - 1 3/4"		•				•						•				
109 A	YARD STORAGE	EXTERIOR	D8	001																	
110 A	HALLWAY	OFFICE	D5	103	0' - 1 3/4"		•				•						•				
111 A	HALLWAY	EXTERIOR	D1	D715 A	0' - 1 3/4"	•				•								•			
112 A	APPARATUS BAYS	UTILITY	D5	407	0' - 1 3/4"		•				•						•				
113 A	APPARATUS BAYS	AIR LOCK	D2	C205	0' - 1 3/4"		•				•						•			20 MIN.	
113 B	AIR LOCK	HALLWAY	D2A	405	0' - 1 3/4"			•			•						•			20 MIN.	
114 A	APPARATUS BAYS	EXTERIOR	D7	002					•			•							•		
114 B	APPARATUS BAYS	EXTERIOR	D7	002					•			•							•		
114 C	APPARATUS BAYS	EXTERIOR	D7	002					•			•							•		
114 D	APPARATUS BAYS	EXTERIOR	D5	D715	0' - 1 3/4"		•				•								•		
114 E	APPARATUS BAYS	EXTERIOR	D5	D715	0' - 1 3/4"		•				•								•		
115 A	HALLWAY	EXERCISE	D2	407	0' - 1 3/4"		•				•						•			20 MIN.	
115 B	EXERCISE	EXTERIOR	D8A	001																	
201 A	HALLWAY	DORM 1	D5	303	0' - 1 3/4"			•			•	•									
201 B	DORM 1	RR	D5A	303	0' - 1 3/4"			•			•	•									
203 A	HALLWAY	DORM 2	D5	303S	0' - 1 3/4"			•			•	•									
204 A	HALLWAY	DORM 3	D5	303	0' - 1 3/4"			•			•	•									
205 A	HALLWAY	DORM 4	D5	303S	0' - 1 3/4"			•			•	•									
206 A	HALLWAY	ADA RR	D5	301	0' - 1 3/4"			•			•	•									
207 A	HALLWAY	RR	D5	301	0' - 1 3/4"			•			•	•									
208 A	HALLWAY	RR	D5	301	0' - 1 3/4"			•			•	•									
209 A	HALLWAY	DORM 5	D5	303S	0' - 1 3/4"			•			•	•									
210 A	HALLWAY	DORM 6	D5	303	0' - 1 3/4"			•			•	•									
211 A	HALLWAY	DORM 7	D5	303S	0' - 1 3/4"			•			•	•									
213 A	HALLWAY	UTILITY	D5	401	0' - 1 3/4"			•			•	•									
214 A	HALLWAY	IT	D5	201	0' - 1 3/4"			•			•	•									
215 A	HALLWAY	HALLWAY	D4	403	0' - 1 3/4"			•			•	•									
217 A	AIR LOCK	EXIT HALLWAY	D2	405	0' - 1 3/4"			•			•	•								20 MIN.	
217 B	HALLWAY	AIR LOCK	D2A	405	0' - 1 3/4"			•			•	•								20 MIN.	
219 A	KITCHEN	PANTRY 1	D5	503	0' - 1 3/4"			•			•	•									
220 A	KITCHEN	PANTRY 2	D5	503	0' - 1 3/4"			•			•	•									
221 A	KITCHEN	PANTRY 3	D5	503	0' - 1 3/4"			•			•	•									
223 A	DINING ROOM	PATIO	D1	505A	0' - 1 3/4"	•				•								•			
301 B	RAPPELLING LEVEL	RAPPELLING PLATFORM	D6	595H	0' - 1 3/4"	•				•								•			

NOTES

1. All hollow metal door frames will be painted.
2. Re: Sheet A801 & A802 for door & window details.
3. Re: Spec. for door hardware.
4. Re: Hardware Spec. for Door Swing information
5. All interior wood doors to receive plastic laminate finish U.N.O.
6. All exterior doors to be flush doors.
7. G.C. to coordinate the installation of proximity devices. All areas shown to be roughed in with electrical as part of base bid. Coordinate requirements with proximity device vendor.
8. Storefront doors to be wide style door to accommodate panic device installation. Coordinate with contractor prior to fabrication.
9. All doors shall have thickness of 1-3/4" U.N.O.

REMARKS

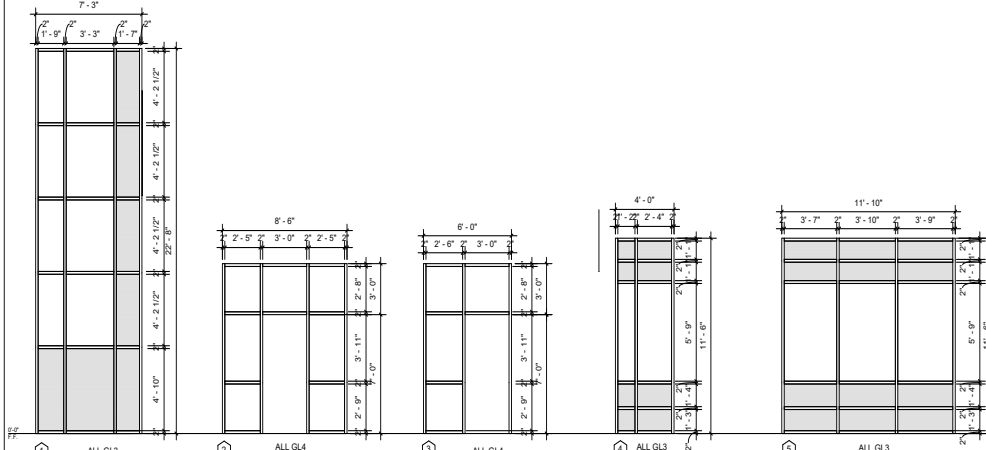

FRAME: Aluminum Storefront
WALL: Exterior Metal Stud & CMU
WIN. COVERING: -

FRAME: Aluminum Storefront
WALL: Exterior CMU
WIN. COVERING: -

FRAME: Aluminum Storefront
WALL: Exterior CMU
WIN. COVERING: -

FRAME: Aluminum Storefront
WALL: Exterior CMU
WIN. COVERING: -

FRAME: Aluminum Storefront
WALL: Exterior CMU
WIN. COVERING: -

FRAME: Aluminum Storefront
WALL: Exterior STRUCTURAL BRICK
WIN. COVERING: -

FRAME: Aluminum Storefront
WALL: Exterior Metal Stud & CMU
WIN. COVERING: -

FRAME: Aluminum Storefront
WALL: Exterior Metal Stud
WIN. COVERING: -

FRAME: Aluminum Storefront
WALL: CMU
WIN. COVERING: -

GLAZING LEGEND
GL1 - 1/4" CLEAR GLASS (TEMPERED)
GL2 - 1/4 CLEAR GLASS (FIRE RATED)
GL3 - 1" TINTED INSULATED GLASS
GL4 - 1" INSULATED TEMPERED GLASS

SHADED GRAY DENOTES "SPANDREL GLASS"

1 WINDOW TYPES

SCALE: 1/4" = 1'-0"

4.1267

PROFESSIONAL SEAL

REGISTERED ARCHITECT JUSTIN E. MYERS 24840 STATE OF TEXAS

LOGO/CONTACT

martinez ARCHITECTS

Martinez Architect, LP
900 Rockmead, Suite 250
Houston, Texas 77339
281.346.7371

DESIGN TEAM

Architectural
Martinez Architects

Civil Engineer
Maverick Engineering

Structural
Matrix Structural Engineers

ME/P/T
DBR

Landscape Architect
KDC Associates

FIRE STATION #5

CITY OF MIDLAND
2210 W GOLF COURSE RD
MIDLAND, TX 79701

PROJECT No: **MA 18017**
DATE: **16-JAN-2020**

ISSUE
75% CONSTRUCTION DOCUMENT 26-JUN-2019
100% ISSUE FOR PERMIT 30-JUL-2019
100% ISSUE FOR APPROVAL TO BID 16-JAN-2020

DOOR AND WINDOW SCHEDULE

A 902

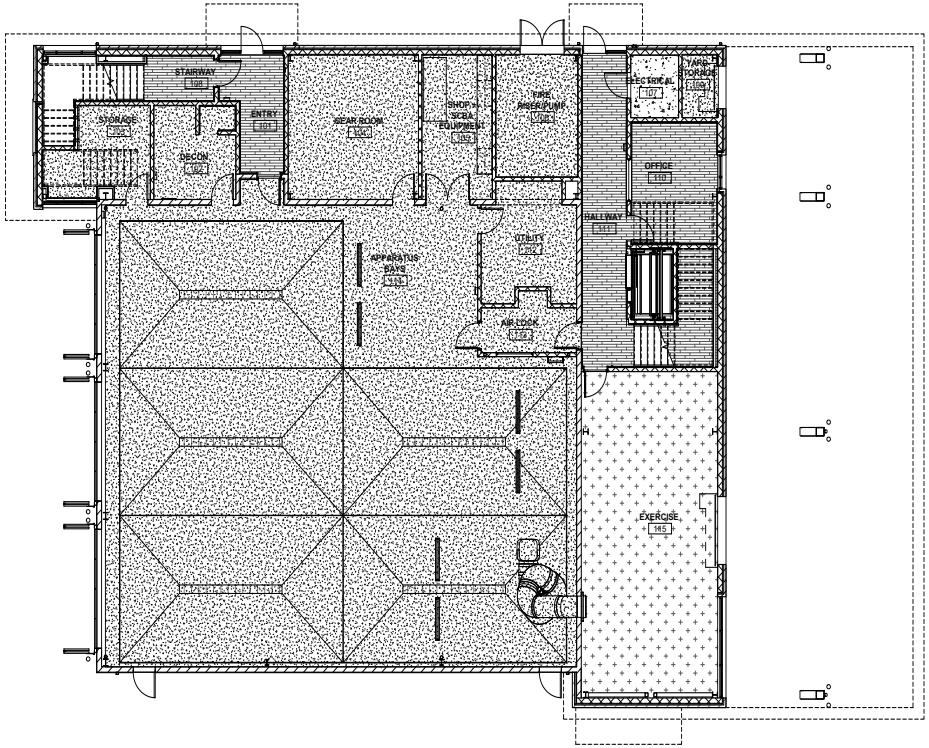

FLOOR FINISH LEGEND

LVT-01	PORCELAIN TILE - 1	SEALED CONCRETE (SC-1)
RUBBER ATHLETIC FLOORING	PORCELAIN TILE (FT-2)	ABRASION & SLIP RESISTANT CONCRETE

TRUE NORTH / PROJECT NORTH

1 LEVEL 1 - FINISH PLAN
SCALE: 1/8" = 1'-0"

4.1268

PROFESSIONAL SEAL

REGISTERED ARCHITECT JUSTIN E. MYERS 24640 STATE OF TEXAS

LOGO/CONTACT

martinez ARCHITECTS

Martinez Architect, LP
900 Rockmead, Suite 250
Houston, Texas 77339
281.346.7371

DESIGN TEAM

Architectural
Martinez Architects

Civil Engineer
Maverick Engineering

Structural
Matrix Structural Engineers

M/E/P/T
DBR

Landscape Architect
KDC Associates

FIRE STATION #5

CITY OF MIDLAND
2210 W GOLF COURSE RD
MIDLAND, TX 79701

PROJECT No: **MA 18017**
DATE: **16-JAN-2020**

ISSUE

75% CONSTRUCTION DOCUMENT
26-JUN-2019

100% ISSUE FOR PERMIT
30-JUL-2019

100% ISSUE FOR APPROVAL TO BID
16-JAN-2020

LEVEL 1 FINISH PLAN

A 903

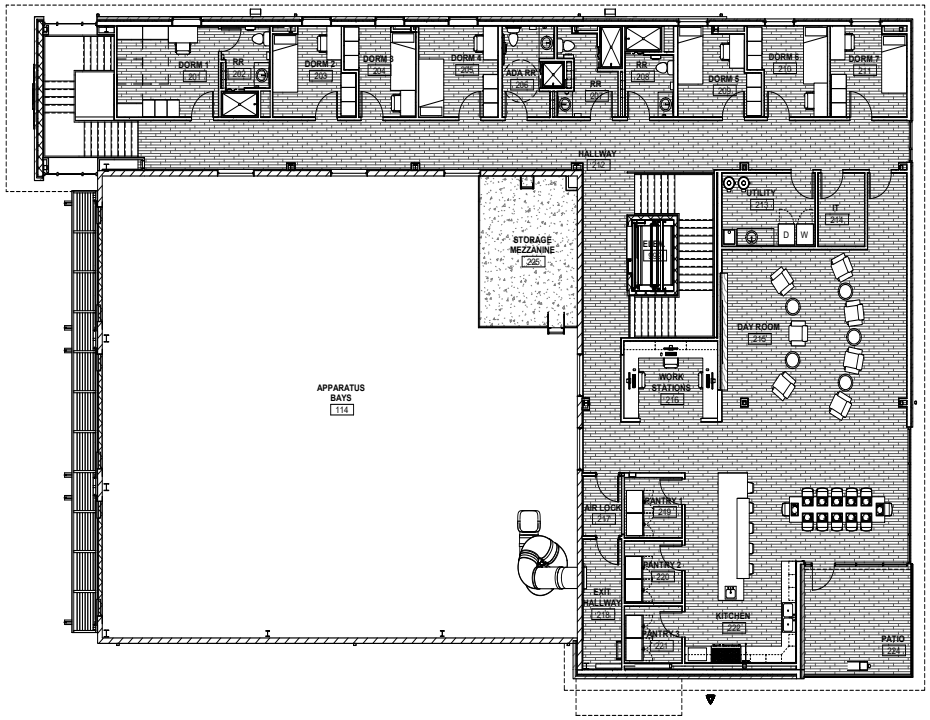

FLOOR FINISH LEGEND

LVT-01	PORCELAIN TILE - 1	SEALED CONCRETE (SC-1)
RUBBER ATHLETIC FLOORING	PORCELAIN TILE (FT-2)	ABRASION & SLIP RESISTANT CONCRETE

TRUE NORTH

PROJECT NORTH

01 LEVEL 2 - FINISH PLAN
SCALE: 1/8" = 1'-0"

4.1269

PROFESSIONAL SEAL

REGISTERED ARCHITECT JUSTIN E. MYERS 24640 STATE OF TEXAS

LOGO/CONTACT

martinez ARCHITECTS

Martinez Architect, LP
900 Rockmead, Suite 250
Houston, Texas 77339
281.346.7371

DESIGN TEAM

Architectural
Martinez Architects

Civil Engineer
Maverick Engineering

Structural
Matrix Structural Engineers

M/E/P/T
DBR

Landscape Architect
KDC Associates

FIRE STATION #5

CITY OF MIDLAND
2210 W GOLF COURSE RD
MIDLAND, TX 79701

PROJECT No: **MA 18017**
DATE: **16-JAN-2020**

ISSUE

75% CONSTRUCTION DOCUMENT
26-JUN-2019

100% ISSUE FOR PERMIT
30-JUL-2019

100% ISSUE FOR APPROVAL TO BID
16-JAN-2020

LEVEL 2 FINISH PLAN

A 904

SIGNAGE SCHEDULE					
ARCH ROOM #	ROOM NAME	SIGN TYPE	SIGN LOCATION	ROOM # ON SIGN	SIGN REMARKS
101	ENTRY	S2	-	-	
102	DECON.	S2	A/102	103	
103	STORAGE	S2	A/103	102	
104	GEAR ROOM	S2	A/104	104	
105	SHOP + SCBA EQUIPMENT	S2	A/105	105	
106	FIRE RISER/PUMP	S2	A/106	110	
107	ELECTRICAL	S2	A/107	107	
108	STAIRWAY	S2		-	
109	YARD STORAGE	S2	A/109	111	
110	OFFICE	S2	A/110	108	
111	HALLWAY	S2	-	-	
112	UTILITY	S2	A/112	106	
113	AIR LOCK	S2		-	
114	APPARATUS BAYS	S2	-	101	
115	EXERCISE	S2	A/115	109	
201	DORM 1	S2	A/201	201	
202	RR	S1	B/201	-	
203	DORM 2	S2	A/203	202	
204	DORM 3	S2	A/204	203	
205	DORM 4	S2	A/205	204	
206	ADA RR	S1	A/206	205	
207	RR	S2	A/207	206	
208	RR	S2	A/208	207	
209	DORM 5	S2	A/209	208	
210	DORM 6	S2	A/210	209	
211	DORM 7	S2	A/111	210	
212	HALLWAY	S2		-	
213	UTILITY	S2	A/213	211	
214	IT	S2	A/214	212	
215	DAY ROOM	S2	-	-	
216	WORK STATIONS	S2	-	-	
217	AIR LOCK	S2	-	-	
218	EXIT HALLWAY	S2	-	-	
219	PANTRY 1	S2	A/219	213	
220	PANTRY 2	S2	A/220	214	
221	PANTRY 3	S2	A/221	215	
222	KITCHEN	S2	-	-	
223	DINING ROOM	S2	-	-	
224	PATIO	S2	-	-	
225	STORAGE MEZZANINE	S2	-	-	
301	RAPPELLING LEVEL	S2	-	-	
302	RAPPELLING PLATFORM	S2	-	-	

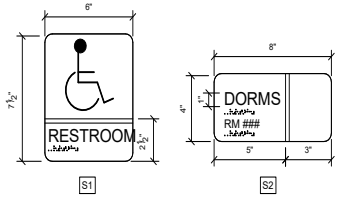

5 SIGNAGE
SCALE: 3" = 1'-0"

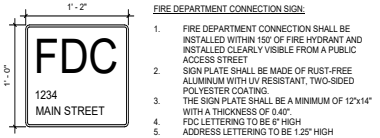

FIRE DEPARTMENT CONNECTION SIGN:

1. FIRE DEPARTMENT CONNECTION SHALL BE INSTALLED WITHIN 150' OF FIRE HYDRANT AND INSTALLED CLEARLY VISIBLE FROM A PUBLIC ACCESS STREET
2. SIGN PLATE SHALL BE MADE OF RUST-FREE ALUMINUM WITH UV RESISTANT, TWO-SIDED POLYESTER COATING.
3. THE SIGN PLATE SHALL BE A MINIMUM OF 12"x14" WITH A THICKNESS OF 0.40".
4. FDC LETTERING TO BE 6" HIGH
5. ADDRESS LETTERING TO BE 1.25" HIGH

3 FIRE PROTECTION LAYOUT AND IDENTIFICATION
SCALE: 1 1/2" = 1'-0"

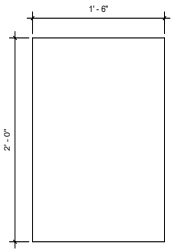

4 DEDICATION PLAQUE
SCALE: 1 1/2" = 1'-0"

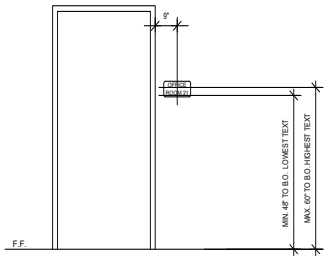

2 SIGNAGE TEXT HEIGHT
SCALE: 1/2" = 1'-0"

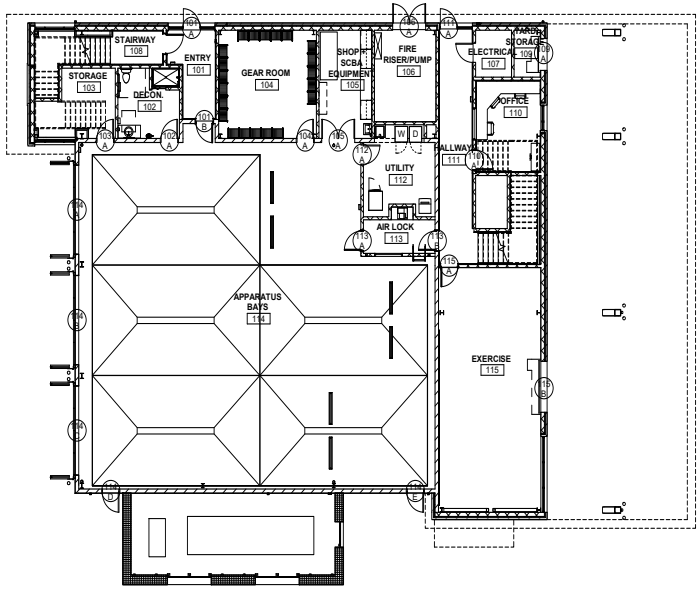

6 LEVEL 1 - SIGNAGE DETAIL
SCALE: 3/32" = 1'-0"

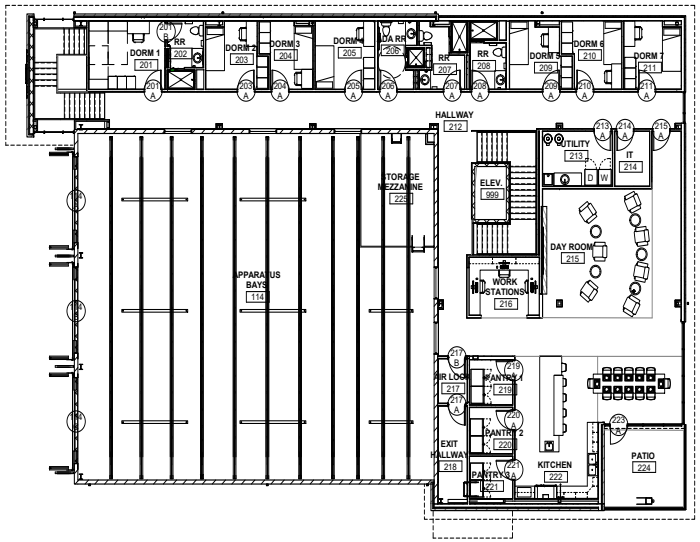

1 LEVEL 2 - SIGNAGE PLAN
SCALE: 3/32" = 1'-0"

PROFESSIONAL SEAL

REGISTERED ARCHITECT JUSTIN E. MYERS 24840 STATE OF TEXAS

LOGO/CONTACT

martinez ARCHITECTS

Martinez Architect, LP
900 Rockmead, Suite 250
Houston, Texas 77339
281.346.7371

DESIGN TEAM

Architectural
Martinez Architects

Civil Engineer
Maverick Engineering

Structural
Matrix Structural Engineers

M/E/P/T
DBR

Landscape Architect
KDC Associates

FIRE STATION #5
CITY OF MIDLAND
2210 W GOLF COURSE RD
MIDLAND, TX 79701

PROJECT No: **MA 18017**
DATE: **16-JAN-2020**

ISSUE
75% CONSTRUCTION DOCUMENT 26-JUN-2019
100% ISSUE FOR PERMIT 30-JUL-2019
100% ISSUE FOR APPROVAL TO BID 16-JAN-2020

SIGNAGE DETAIL & SCHEDULE

A 905

4.1270

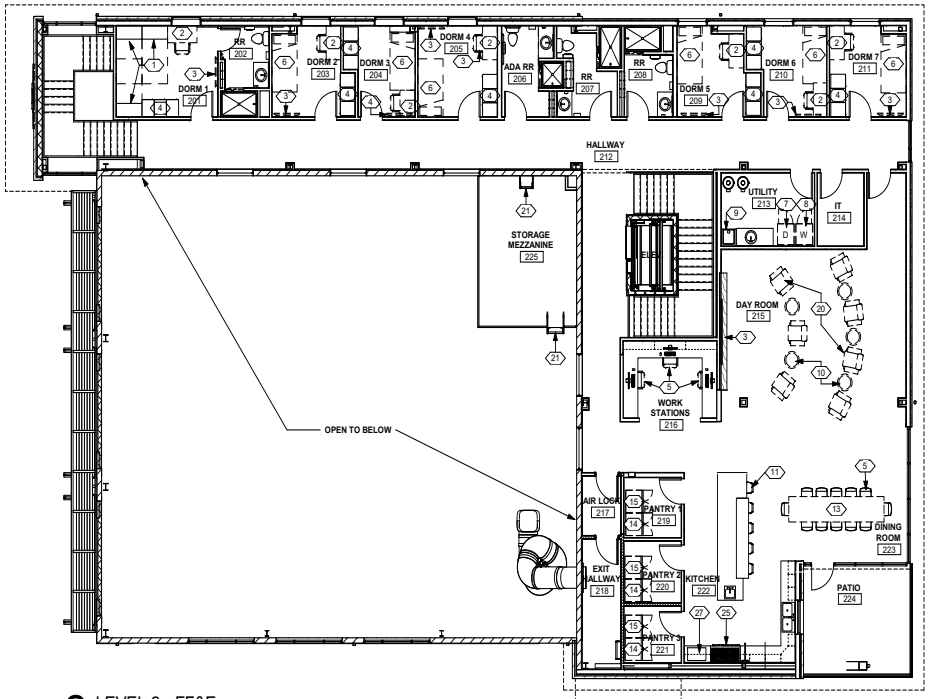

2 LEVEL 2 - FF&E
SCALE: 1/8" = 1'-0"

LINE OF FLOOR ABOVE

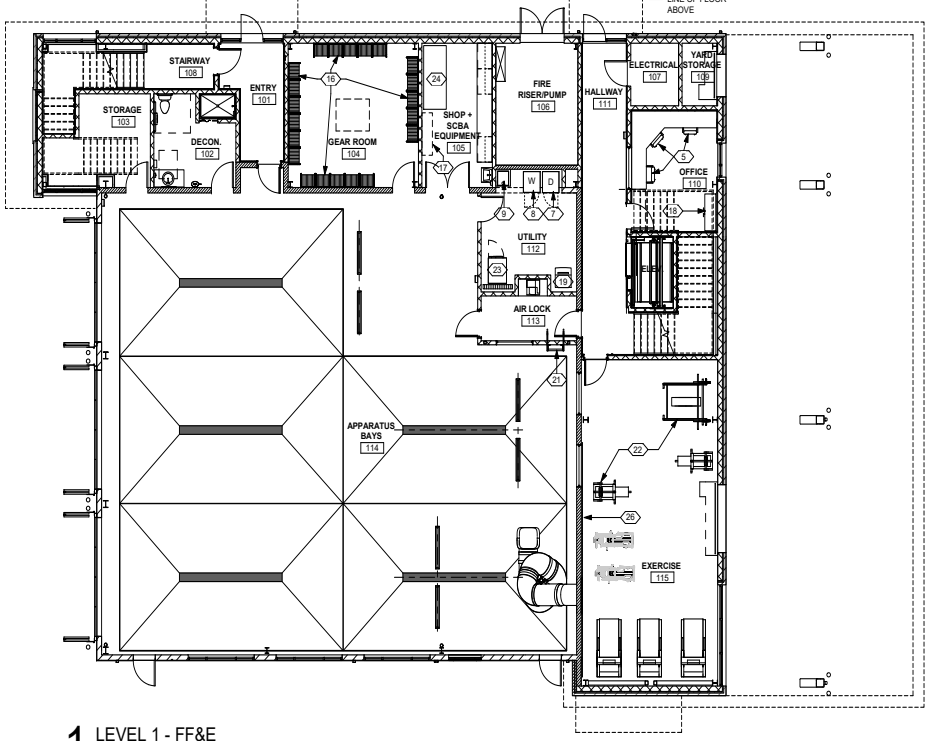

1 LEVEL 1 - FF&E
SCALE: 1/8" = 1'-0"

EQUIPMENT SCHEDULE

KEY NOTE	ITEM	FURNISHED BY	INSTALLED BY	NOTES
1	MURPHY BED	CONTRACTOR	CONTRACTOR	
2	TABLE/CHAIR	OWNER	OWNER	
3	TELEVISION	OWNER	OWNER	
4	2-TIER LOCKER	CONTRACTOR	CONTRACTOR	
5	CHAIR	OWNER	OWNER	
6	TWIN XL BED	OWNER	OWNER	
7	DRYER	OWNER	CONTRACTOR	
8	WASHING MACHINE	OWNER	CONTRACTOR	
9	MOP SINK	CONTRACTOR	CONTRACTOR	
10	COFFEE TABLE	OWNER	CONTRACTOR	
11	BAR STOOL	OWNER	OWNER	
12	SLIDE	OWNER	CONTRACTOR	
13	TABLE	OWNER	OWNER	
14	REFRIGERATOR	OWNER	ONTRACTOR	
15	FREEZER	OWNER	CONTRACTOR	
16	GEAR GRID LOCKER	CONTRACTOR	CONTRACTOR	
17	TANK STORAGE	OWNER	CONTRACTOR	
18	STORAGE CABINET	OWNER	CONTRACTOR	
19	ICE MACHINE	CONTRACTOR	CONTRACTOR	
20	RECLINER	OWNER	CONTRACTOR	
21	FIXED LADDER	CONTRACTOR	CONTRACTOR	
22	EXERCISE EQUIPMENT	OWNER	OWNER	
23	EXTRACTOR	OWNER	CONTRACTOR	
24	AIR COMPRESSOR	OWNER	CONTRACTOR	
25	RANGE/ HOOD/ OVEN	CONTRACTOR	CONTRACTOR	
26	WALL MIRROR	CONTRACTOR	CONTRACTOR	
27	MICROWAVE	OWNER	OWNER	

PROFESSIONAL SEAL

REGISTERED ARCHITECT JUSTIN E. MYERS 24640 STATE OF TEXAS

LOGO/CONTACT

martinez ARCHITECTS
Martinez Architect, LP
900 Rockmead, Suite 250
Houston, Texas 77339
281.346.7371

DESIGN TEAM

Architectural
Martinez Architects

Civil Engineer
Maverick Engineering

Structural
Matrix Structural Engineers

M/E/P/T
DBR

Landscape Architect
KDC Associates

FIRE STATION #5

CITY OF MIDLAND
2210 W GOLF COURSE RD
MIDLAND, TX 79701

PROJECT No: **MA 18017**
DATE: **16-JAN-2020**

ISSUE
75% CONSTRUCTION DOCUMENT 26-JUN-2019
100% ISSUE FOR PERMIT 30-JUL-2019
100% ISSUE FOR APPROVAL TO BID 16-JAN-2020

EQUIPMENT SCHEDULE

A 906

4.1271

FIRE STATION #5

2200 W GOLF COURSE RD
MIDLAND, TX 79701

ABBREVIATIONS

ABBR.	ABBREVIATION
A.F.F.	ABOVE FINISH FLOOR
ADDN'L	ADDITIONAL
AHU	AIR HANDLING UNIT
ALT.	ALTERNATE
ANCH.	ANCHOR
A.B.	ANCHOR BOLT
A.R.	ANCHOR ROD
APPROX.	APPROXIMATELY
ARCH.	ARCHITECT(URAL)
BM.	BEAM
BRG.	BEARING
BTW	BETWEEN
BOT.	BOTTOM
B.F.B.	BOTTOM FLANGE BRACE
B.O.	BOTTOM OF
BRDG.	BRIDGING
BLDG	BUILDING
C	CAMBER
CANT.	CANTILEVER
C.I.P.	CAST IN PLACE
C/C	CENTER TO CENTER
CL	CENTERLINE
CH	CHANNEL
CLR.	CLEAR(ANCE)
CFMS	COLD FORMED METAL STUD
COL.	COLUMN
CJP	COMPLETE JOINT PENETRATION
CONC.	CONCRETE
CMU	CONCRETE MASONRY UNIT
CONN.	CONNECTION
CONST.	CONSTRUCTION
C.J.	CONSTRUCTION / CONTRACTION JOINT
CONT.	CONTINUOUS
COORD.	COORDINATE
DL	DEAD LOAD
DBA	DEFORM BAR ANCHOR
D	DEPTH
DET.	DETAIL
DIA. or Ø	DIAMETER
DIM.	DIMENSION
DWL.	DOWEL
D.N.	DOWN
DWG.	DRAWING
EA.	EACH
E.F.	EACH FACE
E.W.	EACH WAY
EL.	ELEVATION
ELEV.	ELEVATOR
EMBED.	EMBEDMENT
ENGR.	ENGINEER
EOR	ENGINEER OF RECORD
EQ.	EQUAL
EQUIP.	EQUIPMENT
EQUIV.	EQUIVALENT
EXIST.	EXISTING
E.J.	EXPANSION JOINT
EXT.	EXTERIOR
f'c=	28 DAY CONCRETE STRENGTH
FAB.	FABRICATE
F.S.	FAR SIDE
FIN	FINISH/FINISHED
FLR	FLOOR
F.D.	FLOOR DRAIN
FTG.	FOOTING
Fy=	YIELD STRENGTH
GALV.	GALVANIZED
GA.	GAUGE
GEN	GENERAL
G.C.	GENERAL CONTRACTOR
GFRC	GLASS FIBER REINFORCED CONCRETE

GR.	GRADE/GRADING
HGR.	HANGER
HSA	HEADED STUD ANCHOR
HI	HIGH
HSS	HOLLOW STRUCTURAL SECTION
HORIZ.	HORIZONTAL
H	HORIZONTAL REACTION
IN	INCH
INFO.	INFORMATION
ID	INSIDE DIAMETER
INT.	INTERIOR
JT.	JOINT
JST.	JOIST
K	KIPS (1000 LBS)
KSF	KIPS PER SQUARE FOOT
KSI	KIPS PER SQUARE INCH
L	ANGLE
Ld	DEVELOPMENT LENGTH
LWC	LIGHTWEIGHT CONCRETE
LL	LIVE LOAD
LLBB	LONG LEG BACK TO BACK
LLV	LONG LEG VERTICAL
LLH	LONG LGE HORIZONTAL
LSH	LONG SIDE HORIZONTAL
LSV	LONG SIDE VERTICAL
LONG	LONGITUDINAL
LO	LOW
LBS	POUNDS
MFR. / MNFR.	MANUFACTURER
MAS.	MASONRY
MAX.	MAXIMUM
MECH.	MECHANICAL
MEP	MECHANICAL, ELECTRICAL, PLUMBING
MTL.	METAL
MIN.	MINIMUM
MISC.	MISCELLANEOUS
M	MOMENT
M.C.	MOMENT CONNECTION
N.S.	NEAR SIDE
NWC	NORMAL WEIGHT CONCRETE
N.I.C.	NOT IN CONTRACT
N.T.S.	NOT TO SCALE
NO.	NUMBER
O.C.	ON CENTER(S)
OPNG.	OPENING
OPP.	OPPOSITE
OPH.	OPPOSITE HAND
OD	OUTSIDE DIAMETER
OA	OVERALL
O.H.	OVERHEAD
OVS.	OVERSIZED HOLE
P	AXIAL LOAD
PAR.	PARALLEL
PRKG.	PARKING
PJP	PARTIAL JOINT PENETRATION
PVMT	PAVEMENT
PVG	PAVING
PERP.	PERPENDICULAR
PL	PLATE
PLBG	PLUMBING
PT	POST-TENSION(ED)
PCF	POUNDS PER CUBIC FOOT/FEET
PLF	POUNDS PER LINEAR FOOT
PSF	POUNDS PER SQUARE FOOT/FEET
PSI	POUNDS PER SQUARE INCH
P/C	PRECAST CONCRETE

PRELIM.	PRELIMINARY
P.L.	PROPERTY LINE
QTY	QUANTITY
R	RADIUS, REACTION, REMAINDER
REC.	RECESSED
RE:	REFER TO
REF.	REFERENCE
REINF.	REINFORCED / REINFORCING
REBAR	REINFORCING BAR
REQ'D	REQUIRED
REV.	REVISION
R.D.	ROOF DRAIN
RTU	ROOF TOP UNIT
SCHED.	SCHEDULE
SECT.	SECTION
SHT.	SHEET
SLBB	SHORT LEG BACK TO BACK
SIM.	SIMILAR
SC	SLIP CRITICAL, SHEAR CONNECTOR
SPA.	SPACING
SPEC.	SPECIFICATION
SQ.	SQUARE
SF.	SQUARE FOOT/FEET
STD	STANDARD
STL	STEEL
STIFF.	STIFFENER
STIR.	STIRRUP
STRUCT.	STRUCTURE/STRUCTURAL
TEMP.	TEMPERED
THK	THICK(NESS)
t	THICKNESS, TREAD
THD	THREADED
T.O.	TOP OF
T.O.C.	TOP OF CONCRETE
T.O.M.	TOP OF MASONRY
T.O.P.	TOP OF PARAPET
T.O.S.	TOP OF STEEL
T.O.W.	TOP OF WALL
TYP.	TYPICAL
U.N.O.	UNLESS NOTED OTHERWISE
V.I.F.	VERIFY IN FIELD
VERT.	VERTICAL
WT.	WEIGHT
WWR	WELD WIRE REINF.
WF	WIDE FLANGE
W	WIDTH
WL	WIND LOAD
W.P.	WORK POINT
XXS	DOUBLE EXTRA STRONG
XS	EXTRA STRONG
&	AND
≈	APPROXIMATELY EQUAL
@	AT
°	DEGREE
=	EQUAL
≥	GREATER THAN or EQUAL
≤	LESS THAN or EQUAL
#	NUMBER or POUNDS
/	PER
±	PLUS or MINUS
Ø	ROUND/DIAMETER

SYMBOLS LEGEND

SYMBOLS	DESCRIPTION
N	NORTH ARROW
XX S-X.XX	ENLARGE FLOOR PLAN REFERENCE OR ENLARGE DETAIL REFERENCE
XX S-X.XX	DETAIL SECTION (STRUCTURAL)
XX/SX.XX	BRACING ELEVATION
11 5/8" 6"	DIMENSIONS
XX/S-X.XX XX/S-X.XX	MATCHLINE
1	REVISION NUMBER & AFFECTED AREA
LEVEL NAME 0' - 0"	VERTICAL ELEVATION
EX: 152' - 6"	EXISTING ELEVATION
152' - 6"	NEW ELEVATION
	M.C. OR MOMENT CONNECTION
	DEPRESSION
	INDICATE PANEL
12/36 BELL DIAMETER (IN) SHAFT DIAMETER (IN)	BELLED PIER
P1	PILE SHAFT
F3	FOOTING

MSE# 18134
Issue Date: 01/14/2020
Project Status: 99% CD

STRUCTURAL SHEET INDEX

SHEET NUMBER	SHEET NAME	Current Revision
S000	COVER SHEET	
S001	3D CONCEPTUAL	
S101	GENERAL NOTES	
S102	GENERAL NOTES	
S103	GENERAL NOTES	
S201	FOUNDATION PLAN	
S202	SECOND FLOOR FRAMING PLAN	
S203	LOW ROOF FRAMING PLAN	
S204	HIGH ROOF FRAMING PLAN	
S301	FOUNDATION DETAILS	
S302	FOUNDATION DETAILS	
S303	FOUNDATION DETAILS	
S304	FOUNDATION DETAILS	
S305	FOUNDATION DETAILS	
S306	FOUNDATION DETAILS	
S401	FRAMING DETAILS	
S402	FRAMING DETAILS	
S403	FRAMING DETAILS	
S404	FRAMING DETAILS	
S501	COMPOSITE FLOOR DETAILS	
S502	COMPOSITE FLOOR DETAILS	
S503	COMPOSITE FLOOR DETAILS	
S601	ROOF FRAMING DETAILS	
S602	ROOF FRAMING DETAILS	
S603	ROOF FRAMING DETAILS	
S604	ROOF FRAMING DETAILS	
S605	ROOF FRAMING DETAILS	
S701	MASONRY DETAILS	
S702	MASONRY DETAILS	
S703	MASONRY DETAILS	
S801	BRACE ELEVATIONS & DETAILS	
S802	LEANING COLUMN ELEVATIONS & DETAILS	

PROFESSIONAL SEAL

Matrix Structural Engineers
TBPE Firm Registration No. F-2640

STATE OF TEXAS
ARNOOL A. KHAYBATTEE
66260
LICENSED PROFESSIONAL ENGINEER

01/14/20

LOGO/CONTACT

MATRIX STRUCTURAL ENGINEERS

5177 Richmond Avenue, Suite 670
Houston, TX 77046-2401
Tel: 713.664.0133
Fax: 713.664.1370
MSE - 18134

DESIGN TEAM

Architectural
Martinez Architects

Civil Engineer
Maverick Engineering

Structural
Matrix Structural Engineers

MEP
DBR

Landscaping
KDC Associates

FIRE STATION #5
CITY OF MIDLAND
2200 W GOLF COURSE RD
MIDLAND, TX 79701

PROJECT No: **MA 18017**
DATE: **01/14/2020**

No.	Date	Description
	05/21/19	100% DD
	07/30/19	ISSUE FOR PERMIT
	01/14/20	99% CD

COVER SHEET

S000

4.1272

1/14/2020 6:31:57 PM

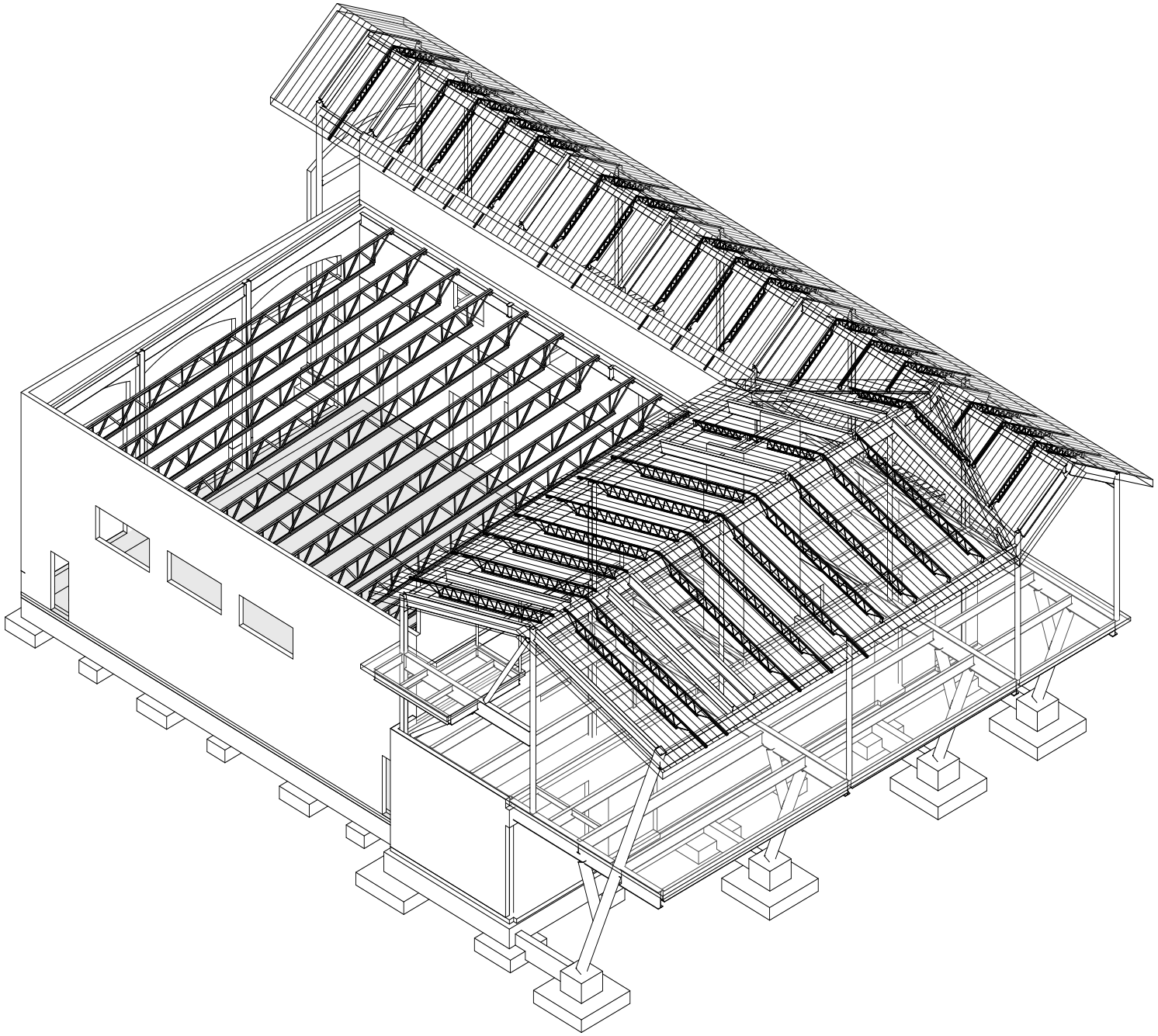

1 3D CONCEPTUAL
SCALE:

NOTE:
THIS 3D DIMENSIONAL VIEW IS PROVIDED AS A CONCEPTUAL SCHEMATIC ONLY. ACCORDINGLY, VARIOUS ITEMS, INCLUDING, BUT NOT LIMITED TO, MISC. STEEL, ROOF DECK, FLOOR DECKS, CONNECTION PLATES, AND REINFORCING MAY NOT BE SHOWN. REFER TO PLANS AND DETAILS FOR ALL MEMBER SIZES, LOCATIONS, DIMENSIONS, AND ADDN'L INFO.

4.1273

PROFESSIONAL SEAL

Matrix Structural Engineers
TBPE Firm Registration No. F-2640

ARNOLD A. KHATTATTEE
66260
01/14/20

LOGO/CONTACT

MATRIX
STRUCTURAL
ENGINEERS
5177 Richmond Avenue, Suite 670
Houston, TX 77046-2401
Tel: 713.664.0133
Fax: 713.664.1370
MSE - 18134

DESIGN TEAM

Architectural
Martinez Architects

Civil Engineer
Maverick Engineering

Structural
Matrix Structural Engineers

MEP
DBR

Landscaping
KDC Associates

FIRE STATION #5

CITY OF MIDLAND
2200 W GOLF COURSE RD
MIDLAND, TX 79701

PROJECT No: **MA 18017**
DATE: **01/14/2020**

No.	Date	Description
	05/21/19	100% DD
	07/30/19	ISSUE FOR PERMIT
	01/14/20	99% CD

3D CONCEPTUAL

S001

A. GENERAL

1. ALL WORK SHALL CONFORM TO THE MINIMUM STANDARDS OF THE FOLLOWING CODES. THE CODES LISTED SHALL INCLUDE ALL AMENDMENTS AND ADDENDA IN FORCE AT THE DATE OF THE CONTRACT DOCUMENTS.

   2015 EDITION OF THE INTERNATIONAL BUILDING CODE

2. WHERE CONFLICT EXISTS AMONG THE VARIOUS PARTS OF THE STRUCTURAL AND ARCHITECTURAL CONTRACT DOCUMENTS THE STRICTEST REQUIREMENTS SHALL GOVERN.

3. CONTRACTOR SHALL FIELD VERIFY ALL DIMENSIONS AND EXISTING CONDITIONS AT THE JOB SITE AND REPORT ANY DISCREPANCIES OR INCONSISTENCIES FROM ASSUMED CONDITIONS TO THE ARCHITECT PRIOR TO FABRICATION AND CONSTRUCTION.

4. DETAILS LABELED "TYPICAL DETAILS" ON THE DRAWINGS SHALL APPLY TO ALL SITUATIONS OCCURRING ON THE PROJECT THAT ARE THE SAME OR SIMILAR TO THOSE SPECIFICALLY DETAILED. SUCH DETAILS APPLY WHETHER OR NOT THEY ARE CUT AT EACH LOCATION. QUESTIONS REGARDING APPLICABILITY OF TYPICAL DETAILS SHALL BE DETERMINED BY THE ENGINEER.

5. DO NOT SCALE THE DRAWINGS.

6. THE GENERAL CONTRACTOR SHALL COMPARE THE ARCHITECTURAL AND STRUCTURAL DRAWINGS AND REPORT ANY DISCREPANCY BETWEEN EACH SET OF DRAWINGS AND WITHIN EACH SET OF DRAWINGS TO THE ARCHITECT AND ENGINEER PRIOR TO THE FABRICATION AND INSTALLATION OF ANY STRUCTURAL MEMBERS.

7. IT IS THE RESPONSIBILITY OF THE GENERAL CONTRACTOR TO OBTAIN ALL CONTRACT DOCUMENTS AND LATEST ADDENDA AND TO SUBMIT SUCH DOCUMENTS TO ALL SUBCONTRACTORS AND MATERIAL SUPPLIERS PRIOR TO THE SUBMITTAL OF SHOP DRAWINGS, FABRICATION OF ANY STRUCTURAL MEMBERS, AND ERECTION IN THE FIELD.

8. IT IS THE RESPONSIBILITY OF THE CONTRACTOR TO PROVIDE ALL MEASURES NECESSARY TO PROTECT THE STRUCTURE DURING CONSTRUCTION. SUCH MEASURES SHALL INCLUDE, BUT ARE NOT LIMITED TO, BRACING AND SHORING FOR LOADS DUE TO HYDROSTATIC, EARTH, WIND OR SEISMIC FORCES, AND CONSTRUCTION EQUIPMENT. OBSERVATION VISITS TO THE SITE BY THE ENGINEER SHALL NOT INCLUDE INSPECTION OF THE ABOVE ITEMS.

9. THE CONTRACT STRUCTURAL DRAWINGS AND SPECIFICATIONS REPRESENT THE FINISHED STRUCTURE. THEY DO NOT INDICATE THE METHOD OF CONSTRUCTION. THE CONTRACTOR SHALL SUPERVISE AND DIRECT THE WORK AND SHALL BE SOLELY RESPONSIBLE FOR ALL CONSTRUCTION MEANS, METHODS, PROCEDURES, TECHNIQUES, AND SEQUENCE.

10. PERIODIC SITE OBSERVATION BY THE ENGINEER IS SOLELY FOR THE PURPOSE OF DETERMINING IF THE WORK OF THE CONTRACTOR IS PROCEEDING IN GENERAL ACCORDANCE WITH THE STRUCTURAL CONTRACT DOCUMENTS. THIS LIMITED SITE OBSERVATION SHOULD NOT BE CONSTRUED AS EXHAUSTIVE OR CONTINUOUS TO CHECK THE QUALITY OF THE WORK, BUT RATHER PERIODIC IN AN EFFORT TO GUARD THE OWNER AGAINST DEFECTS OR DEFICIENCIES IN THE WORK OF THE CONTRACTOR.

11. NOTIFY THE STRUCTURAL ENGINEER WHEN DRAWINGS BY OTHERS SHOW OPENINGS, POCKETS, ETC., NOT SHOWN ON THE STRUCTURAL DRAWINGS, BUT WHICH ARE LOCATED IN THE STRUCTURAL MEMBERS.

12. DO NOT PENETRATE ANY STRUCTURAL ELEMENTS (BEAMS, COLUMNS, WALLS, SLABS, ETC.) WITHOUT PRIOR WRITTEN APPROVAL OF STRUCTURAL ENGINEER.

13. NOTES AND DETAILS ON DRAWINGS SHALL TAKE PRECEDENCE OVER GENERAL STRUCTURAL NOTES AND TYPICAL DETAILS. WHERE NO SPECIFIC DETAILS ARE SHOWN, CONSTRUCTION SHALL CONFORM TO SIMILAR WORK ON THE PROJECT.

14. SEE THE ARCHITECTURAL DRAWINGS FOR THE FOLLOWING:

    SIZE AND LOCATION OF DOOR AND WINDOW OPENINGS,
    SIZE AND LOCATION OF INTERIOR AND EXTERIOR NON-LOAD BEARING PARTITIONS, SIZE AND LOCATION OF CONCRETE CURBS, FLOOR DRAINS, SLOPES, DEPRESSED AREAS, CHAMFERS, GROOVES, INSERTS, ETC., SIZE AND LOCATION OF FLOOR AND ROOF OPENINGS, FLOOR AND ROOF FINISHES,
    STAIR FRAMING AND DETAILS, DIMENSIONS NOT SHOWN ON THE STRUCTURAL DRAWINGS, CEILING AND EXTERIOR WALL ASSEMBLIES.

15. SEE THE MECHANICAL, PLUMBING, AND ELECTRICAL DRAWINGS FOR THE FOLLOWING:

    PIPES, SLEEVES, HANGERS, TRENCHES, WALL, FLOOR AND ROOF OPENINGS, DUCT PENETRATIONS, ETC., EXCEPT AS SHOWN OR NOTED OTHERWISE ELECTRICAL CONDUIT RUNS, BOXES, OUTLETS IN WALLS AND SLABS, CONCRETE INSERTS FOR ELECTRICAL, MECHANICAL, OR PLUMBING FIXTURES, SIZE AND LOCATION OF MACHINE OR EQUIPMENT BASES AND ANCHOR BOLTS FOR MOUNTS.

B. DESIGN CRITERIA

1. DEAD LOAD MATERIALS ASSUMED IN THE DESIGN ARE SHOWN ON THE ARCHITECTURAL AND STRUCTURAL DRAWINGS.

2. AN ALLOWANCE OF 15 PSF HAS BEEN MADE FOR PARTITIONS AS A UNIFORMLY DISTRIBUTED LIVE LOAD, WHEREVER PARTITIONS ARE USED AND LOCATION SUBJECT TO CHANGE EXCLUDING PUBLIC LOBBIES, CORRIDORS, RESTROOMS, AND PLACES OF PUBLIC ASSEMBLY.

3. LIVE LOADS:

LOCATION	UNIFORM LOAD	CONCENTRATED LOAD
ROOF	20 PSF REDUCIBLE	300 LBS
BALCONIES	100 PSF REDUCIBLE	
TYPICAL FLOOR	40 PSF REDUCIBLE	
CORRIDORS	100 PSF REDUCIBLE	
STAIRS AND EXITS	100 PSF REDUCIBLE	300 LBS
STORAGE	150 PSF REDUCIBLE	
GROUND FLR, COMMON AREAS	100 PSF REDUCIBLE	
HANDRAILS AND GUARDRAILS	50 PLF OR 200 LBS APPLIED AT TOP RAIL IN ANY DIRECTION. 50 LBS IN ANY DIRECTION APPLIED AT INTERMEDIATE RAILS.	
GRAB BARS		250 LBS ANY DIRECTION
APPARATUS BAY	250 PSF REDUCIBLE	

4. WIND LOADS

ULTIMATE WIND SPEED	120 MPH (3-SEC GUST)
NOMINAL WIND SPEED	93 MPH (3-SEC GUST)
RISK CATEGORY	IV
EXPOSURE CATEGORY	B
INTERNAL PRESSURE COEFF.	+/- 0.18
COMPONENTS & CLADDING	SEE PLAN

5. SEISMIC LOADS

   RISK CATEGORY IV
   SITE CLASS D
   IMPORTANCE FACTOR 1.5
   MAPPED ACCELERATION PARAMETERS
   SS: 0.126g
   S1: 0.035g
   SPECTRAL RESPONSE COEFFICIENTS
   SDS: 0.134g
   SD1: 0.055g
   SEISMIC DESIGN CATEGORY A
   SEISMIC DESIGN NOT REQUIRED PER SECTION 11-7 OF ASCE 7-10

6. SNOW LOADS
   FLAT-ROOF SNOW LOAD: 4.2 PSF
   EXPOSURE FACTOR: C_e=0.4
   IMPORTANCE FACTOR I=1.2
   THERMAL FACTORS C_t=1.0

7. HANDRAILS, GUARDRAILS AND GRAB BARS (INCLUDING ATTACHMENT TO STRUCTURE) SHALL BE DESIGNED BY THE FABRICATOR FOR THE LOADS INDICATED IN THE REFERENCED BUILDING CODE. SHOP DRAWINGS SHALL BE SEALED BY A PROFESSIONAL ENGINEER IN THE STATE OF WHERE THE PROJECT IS LOCATED, REPRESENTING THE FABRICATOR.

8. STAIRS SHALL BE DESIGNED BY THE STEEL FABRICATOR FOR CODE REQUIRED LOADS. SHOP DRAWINGS SHALL BE SEALED BY A PROFESSIONAL ENGINEER IN THE STATE OF WHERE THE PROJECT IS LOCATED, REPRESENTING THE FABRICATOR.

4.1274

C. FOUNDATION

1. THE FOUNDATION DESIGN IS BASED ON THE FOLLOWING GEOTECHNICAL REPORT (AND ANY ADDENDA) PREPARED BY THE FOLLOWING COMPANY:

   COMPANY: BEYOND
   REPORT NO. GT1902006
   DATED: 04/11/2019

   ALL RECOMMENDATIONS THEREIN THAT RELATE TO THE WORK SHOWN ON THESE DRAWINGS SHALL BE FOLLOWED.

2. THE FOUNDATION SYSTEM IS DESIGNED BASED ON THE FOLLOWING

   ALLOWABLE BEARING PRESSURE
   SPREAD FOOTING
   SUSTAINED LOAD - 3000 PSF
   TOTAL LOAD - 4000 PSF
   CONTINUOUS FOOTING
   SUSTAINED LOAD - 1200 PSF
   TOTAL LOAD - 1600 PSF

3. THE GENERAL CONTRACTOR SHALL NOTIFY THE GEOTECHNICAL ENGINEER OR OTHER AUTHORIZED INSPECTOR FOR REVIEW OF FOUNDATION BEARING SURFACE, INSPECTION OF FOUNDATION INSTALLATION, AND PLACEMENT OF REINFORCING STEEL. THE CONTRACTOR SHALL NOT PLACE CONCRETE WITHOUT INSPECTOR'S APPROVAL.

4. THE CONTRACTOR SHALL NOTIFY THE AUTHORIZED INSPECTOR 48 HOURS IN ADVANCE OF ANY MAJOR FOUNDATION POUR.

5. FORM EXPOSED FACES OF GRADE BEAMS.

6. GRADE BEAM BOTTOM STEEL SHALL BE CHAIRED AT 5 FOOT MAXIMUM CENTERS USING BEAM BOLSTERS PROVIDING 3 INCH BOTTOM COVER TO REINFORCING STEEL. BEAM BOLSTERS USED SHALL BE INTENDED FOR SUPPORT ON SOIL.

7. BOTTOM BARS OF GRADE BEAM SHALL BE SPLICED (WHERE REQUIRED) AT THE PIERS ONLY. TOP BARS SHALL BE SPLICED (WHERE REQUIRED) AT THE MIDSPAN OF THE GRADE BEAMS. LAP LENGTH SHALL BE 44 TIMES BAR DIAMETER UNLESS SPECIFIED OTHERWISE. PROVIDE CORNER BARS TO MATCH TOP AND BOTTOM STEEL.

8. SLAB ON GRADE CONSTRUCTION SHALL FOLLOW THE RECOMMENDATIONS OF GUIDE FOR CONCRETE FLOOR AND SLAB CONSTRUCTION ACI 302.1R. PROVIDE (3) #3 X 4'-0" TOP AND BOTTOM AT ALL SLAB ON GRADE RE-ENTRANT CORNERS.

9. SUBGRADE PREPARATION SHALL CONFORM TO THE SOILS REPORT NOTED ABOVE. IF REPORT DOES NOT SPECIFY THE AMOUNT OF SELECT FILL, PROVIDE FILL AS REQUIRED ABOVE TO REDUCE PVR TO 1 INCH.

10. VAPOR RETARDER SHALL HAVE NO MORE THAN 0.01 PERMS AS TESTED BEFORE AND AFTER MANDATORY CONDITIONING (ASTM E 1745 SECTION 7.1 AND SUB-PARAGRAPHS 7.1.2-5), MEET OR EXCEED THE REQUIREMENTS OF ASTM E 1745 CLASS A AND BE NO LESS THAN 15 MILS THICK.

11. ALL VAPOR RETARDER SEAMS SHALL BE OVERLAPPED A MINIMUM OF 6 INCHES AND TAPED WITH MANUFACTURER'S TAPE. ALL PENETRATIONS, BLOCK-OUTS, AND OPENINGS SHALL BE SEALED USING A COMBINATION OF THE VAPOR RETARDER, MASTIC AND MANUFACTURER'S TAPE.

12. THE BEARING STRATUM OF EACH SPREAD FOOTING AND ALL STRIP FOOTINGS SHALL BE INSPECTED AND APPROVED BY THE GEOTECHNICAL ENGINEER OR OTHER AUTHORIZED INSPECTOR PRIOR TO POURING OF CONCRETE.

13. PROVIDE AND INSTALL 1/8 INCH STEEL TEMPLATES TO ACCURATELY SET ANCHOR BOLTS FOR STEEL COLUMNS.

14. FOOTINGS SHALL BE NEAT EXCAVATED WHERE POSSIBLE WITH SIDES AND TOP EDGES FREE OF LOOSE OR WET MATERIALS. WHERE NEAT EXCAVATION IS NOT POSSIBLE, FOOTING EXCAVATION SHALL BE OPEN CUT WITH EDGES FORMED AND BRACED. ALL FOOTINGS WITH FORMED EDGES SHALL BE BACKFILLED FROM BOTTOM TO TOP OF FOOTING WITH LEAN CONCRETE OR CEMENT STABILIZED SAND. THE BOTTOM EXCAVATION SHALL BE CLEAN AND DRY WITH ALL LOOSE MATERIAL REMOVED FOR AN ESSENTIALLY FLAT BEARING SURFACE. EXCAVATIONS SHALL NOT BE LEFT OVERNIGHT UNLESS A 2 INCH UNREINFORCED SEAL (MUD) SLAB IS PLACED AT THE BOTTOM OF THE FOOTING EXCAVATION. WHERE SOFT OR UNSUITABLE BEARING SURFACES ARE ENCOUNTERED, THE AREA SHALL BE UNDERCUT AS REQUIRED AND REPLACED WITH COMPACTED FILL, CEMENT STABILIZED SAND, OR CONCRETE AS DIRECTED BY THE GEOTECHNICAL ENGINEER. FILL MATERIAL, IF USED, SHALL BE COMPACTED IN 6 INCHES MAXIMUM LOOSE LIFTS TO A MINIMUM 95% OF STANDARD PROCTOR DENSITY (ASTM D 698) UNLESS SPECIFIED OTHERWISE BY THE GEOTECHNICAL ENGINEER.

D. CONCRETE

1. ALL ASPECTS OF WORK RELATING TO THE CONCRETE CONSTRUCTION SHALL CONFORM TO THE FOLLOWING CODES AND SPECIFICATIONS:

   ACI 318-14 BUILDING CODE REQUIREMENTS FOR STRUCTURAL CONCRETE
   ACI 301-10 SPECIFICATIONS FOR STRUCTURAL CONCRETE FOR BUILDINGS
   CRSI MANUAL OF STANDARD PRACTICE

2. STRUCTURAL CONCRETE 28-DAY COMPRESSIVE STRENGTHS AND TYPES ARE AS FOLLOWS:

LOCATION	STRENGTH	TYPE	AGGREGATE SIZE
FOOTING	3000 PSI	NORMAL WT	1 1/2"
GRADE BEAMS	3000 PSI	NORMAL WT	1"
PLINTHS	3000 PSI	NORMAL WT	1"
SLAB-ON-GRADE			
TYPICAL	3000 PSI	NORMAL WT	1 1/2"
APPARTUS BAY	4000 PSI	NORMAL WT	1 1/2"
METAL DECK SLAB	3000 PSI	NORMAL WT	3/4"

3. THERE SHALL BE NO HORIZONTAL COLD JOINT IN ANY CONCRETE POUR.

4. ADMIXTURES USED SHALL BE COMPATIBLE WITH FLOOR TREATMENTS. FINISH APPLICATOR SHALL APPROVE ADMIXTURES AND CURING COMPOUNDS PRIOR TO USE.

5. CONCRETE FOR SLAB-ON-GRADE SHALL HAVE A MAXIMUM WATER-CEMENT RATIO OF 0.45. ALL OTHER CONCRETE SHALL HAVE A MAXIMUM WATER-CEMENT RATIO OF 0.50. ADJUST CONCRETE STRENGTH BEYOND MINIMUM SPECIFIED ABOVE TO MAINTAIN MAXIMUM WATER-CEMENT RATIO.

6. CONCRETE FOR SLAB-ON-GRADE AND METAL DECK SHALL BE PROPORTIONED FOR A MAXIMUM ALLOWABLE UNIT SHRINKAGE OF 0.04% (400 MICROSTATIONS) AT 28 DAYS OF DRYING. LENGTH CHANGE SHALL BE MEASURED IN ACCORDANCE WITH ASTM C157.

7. FLY ASH CONFORMING TO ASTM C618, MAY BE USED UNLESS NOTED OTHERWISE. THE MAXIMUM AMOUNT OF FLY ASH SHALL BE 25% OF THE TOTAL CEMENTITIOUS MATERIAL BY WEIGHT.

8. CONCRETE FORMS SHALL BE LAID OUT AND CONSTRUCTED TO PROVIDE THE SPECIFIED CAMBERS INDICATED ON THE STRUCTURAL DRAWINGS.

9. SUBMIT SHOP DRAWINGS TO ARCHITECT AND ENGINEER INDICATING LOCATIONS OF CONCRETE JOINTS TO REVIEW PRIOR TO PLACING CONCRETE. PLACE JOINTS AT LOCATIONS TO MINIMIZE THE EFFECTS OF SHRINKAGE AS WELL AS BEING PLACED AT POINTS OF LOW STRESS.

10. ROUGHEN CONCRETE SURFACES TO 1/4 INCH AMPLITUDE WHERE MASONRY WALLS INTERSECT CONCRETE OR WHERE NEW CONCRETE INTERFACES WITH EXISTING CONCRETE.

11. MECHANICAL PIPES AND ELECTRICAL CONDUITS WHICH PASS THROUGH SLAB-ON-GRADE, CONCRETE ON METAL DECK, FRAMED CONCRETE FLOORS, AND WALLS DO NOT REQUIRE SLEEVES UNLESS NOTED OTHERWISE ON THE PROJECT SPECIFICATIONS, MECHANICAL OR ELECTRICAL DRAWINGS. IF SLEEVES ARE REQUIRED, INSTALL SLEEVES BEFORE PLACING CONCRETE. DO NOT CUT ANY REINFORCING WHICH MAY INTERFERE WITH SLEEVE PLACEMENT. CORING OPENINGS IN CONCRETE IS NOT PERMITTED. NOTIFY THE ARCHITECT AND ENGINEER IN ADVANCE OF CONDITIONS NOT SHOWN ON THE STRUCTURAL DRAWINGS. NO PIPES OR ELECTRICAL CONDUIT SHALL PASS THROUGH CONCRETE BEAMS OR COLUMNS UNLESS SPECIFICALLY DETAILED.

12. WITH THE EXCEPTION OF SLABS ON GRADE AND CONCRETE ON METAL DECK, THE OUTSIDE DIAMETER OF MECHANICAL PIPES AND/OR ELECTRICAL CONDUITS (OTHER THAN THOSE PASSING THROUGH) SHALL NOT EXCEED 1/3 OF THE SLAB THICKNESS AND SHALL BE CENTERED BETWEEN THE TOP AND BOTTOM REINFORCING UNLESS SPECIFICALLY DETAILED OTHERWISE. CONCENTRATIONS OF MECHANICAL PIPES AND/OR ELECTRICAL CONDUITS SHALL BE AVOIDED EXCEPT WHERE DETAILED OPENINGS ARE PROVIDED. CONDUIT AND PIPE SHALL BE SPACED AT 3" OR 3 DIAMETERS ON CENTER, WHICHEVER IS GREATER.

13. FOR SLABS ON GRADE AND METAL DECK SLABS NO PIPES OR CONDUITS SHALL BE PLACED WITHIN THE INDICATED SLAB THICKNESS AND SHALL BE LOCATED BELOW THE SLAB UNLESS SPECIFICALLY DETAILED OTHERWISE.

14. THE DESIGN, CONSTRUCTION, AND SAFETY OF ALL FORMWORK SHALL BE THE RESPONSIBILITY OF THE GENERAL CONTRACTOR. ALL FORMS, SHORES, BACKSHORES, FALSEWORK, BRACING, AND OTHER TEMPORARY SUPPORTS SHALL BE ENGINEERED TO SUPPORT ALL LOADS IMPOSED INCLUDING THE WET WEIGHT OF CONCRETE, CONSTRUCTION EQUIPMENT, LIVE LOADS, LATERAL LOADS DUE TO WIND AND WET CONCRETE IMBALANCE. THE CONTRACTOR SHALL ALSO BE RESPONSIBLE FOR DETERMINING WHEN TEMPORARY SUPPORTS, SHORES, BACKSHORES, AND OTHER BRACING MAY BE SAFELY REMOVED.

E. REINFORCING STEEL

1. ALL ASPECTS OF WORK RELATING TO THE REINFORCING STEEL SHALL CONFORM TO THE FOLLOWING CODES AND SPECIFICATIONS:

   ACI 318-14 BUILDING CODE REQUIREMENTS FOR STRUCTURAL CONCRETE CRSI MANUAL OF STANDARD PRACTICE

2. DEFORMED BARS SHALL CONFORM TO THE REQUIREMENTS OF ASTM A615 GRADE 60.

3. WELDED WIRE FABRIC SHALL CONFORM TO THE REQUIREMENTS OF ASTM A185, YIELD STRENGTH 65,000 PSI. WELDED DEFORMED WIRE FABRIC FOR ASTM A497, YIELD STRENGTH 70,000 PSI. ALL WELDED WIRE FABRIC SHALL BE FURNISHED IN FLAT SHEETS ONLY. WHEREVER WELDED WIRE FABRIC IS SPECIFIED AS REINFORCEMENT, IT SHALL BE CONTINUOUS ACROSS THE ENTIRE CONCRETE SURFACE AND NOT INTERRUPTED BY BEAMS OR GIRDERS AND PROPERLY LAPPED ONE CROSS WIRE SPACING PLUS 2 INCHES.

4. MINIMUM LAP OF WELDED WIRE FABRIC SHALL BE 6 INCHES OR ONE FULL MESH AND ONE HALF, WHICHEVER IS GREATER.

5. WELDING OF REINFORCING IS PERMITTED ONLY WHERE SHOWN ON THE DRAWINGS OR WHEN APPROVED BY THE ENGINEER OF RECORD. WELDING OF REINFORCING BARS SHALL BE WITH LOW HYDROGEN ELECTRODES IN ACCORDANCE WITH THE RECOMMENDED PRACTICES OF AWS D1.4.

6. ALL REINFORCING BAR BENDS SHALL BE MADE COLD.

7. REINFORCING DOWELS BETWEEN FOOTINGS AND WALLS OR COLUMNS SHALL BE THE SAME NUMBER, SIZE, SPACING, AND GRADE AS THE SPECIFIED VERTICAL REINFORCING, UNO.

8. IN ADDITION TO ALL OF THE REINFORCING STEEL INDICATED ON THE DRAWINGS, THE CONTRACTOR SHALL PROVIDE FOR AN ALLOWANCE OF A NET 1/2 TON OF REINFORCING BARS TO BE FURNISHED, FABRICATED, AND PLACED DURING THE PROGRESSION OF WORK AS MAY BE DIRECTED BY THE ENGINEER OF RECORD.

9. CLEAR COVERAGE OF CONCRETE OVER REINFORCING BARS SHALL BE AS FOLLOWS:

LOCATION OF CONCRETE	MINIMUM COVER
CONCRETE CAST AGAINST AND PERMANENTLY EXPOSED TO EARTH	3"
CONCRETE EXPOSED TO EARTH OR WEATHER	
#6 THROUGH #18 BAR	2"
#5 BAR AND SMALLER	1 1/2"
CONCRETE NOT EXPOSED TO EARTH OR WEATHER OR IN CONTACT WITH GROUND	
SLABS, WALLS, JOISTS	3/4"
BEAMS, COLUMNS (INCLUDING TIES)	1 1/2"
SLAB ON GRADE	SEE DETAILS

F. NON-SHRINK GROUT FOR BASE PLATES AND BEARING PLATES

1. GROUT FOR BASE PLATES AND BEARING PLATES SHALL BE A NON-METALLIC, SHRINKAGE RESISTANT, PREMIXED, NON-CORROSIVE, NON-STAINING PRODUCT CONTAINING PORTLAND CEMENT, SILICA SANDS, SHRINKAGE COMPENSATING AGENTS, AND FLUIDITY IMPROVING COMPOUNDS.

2. GROUT SHALL CONFORM TO CORPS OF ENGINEERS SPECIFICATION FOR NON-SHRINK GROUT, CE-CRD-C621. TWENTY-EIGHT DAY COMPRESSIVE STRENGTH AS DETERMINED BY GROUT CUBE TESTS, SHALL BE 5,000 PSI. MINIMUM THICKNESS OF GROUT UNDER ALL BASE PLATES AND BEARING PLATES SHALL BE 1 INCH, UNLESS SPECIFIED OTHERWISE ON THE DRAWINGS.

3. GROUT SHALL BE PLACED IN A FLUID FLOWABLE STATE UNDER BASE PLATES THAT HAVE A FORM BUILT AROUND THEM FOR GROUT CONFINEMENT. GROUT SHOULD BE CURED ACCORDING TO MANUFACTURER'S RECOMMENDATIONS.

G. STRUCTURAL STEEL

1. ALL ASPECTS OF WORK RELATING TO THE DESIGN, FABRICATION, DETAILING, AND ERECTION OF STRUCTURAL STEEL SHALL CONFORM TO THE FOLLOWING CODES AND SPECIFICATIONS:

   FOURTEENTH EDITION OF THE AISC STEEL CONSTRUCTION MANUAL LATEST EDITION OF THE ANSI/AWS D1.1

2. STRUCTURAL STEEL MATERIALS SHALL COMPLY WITH THE FOLLOWING SPECIFICATIONS:

WIDE FLANGE	ASTM A992
ANGLES, PLATES, BARS, CHANNELS	ASTM A36 U.N.O.
PIPES	ASTM A53 GR B
HSS (RECTANGULAR OR SQUARE)	ASTM A500 GR B (Fy = 46 KSI) OR GR C (Fy = 50 KSI)
HSS (ROUND)	ASTM A500 GR B (Fy = 42 KSI) OR GR C (Fy = 46 KSI)
ANCHOR RODS	ASTM F1554-36 U.N.O
HIGH STRENGTH BOLTS	ASTM F3125 GR A325 OR GR F1852 U.N.O.
HEADED STUD ANCHORS (HSA)	ASTM A108
DEFORMED BAR ANCHORS (DBA)	ASTM A496

3. THE DESIGN OF ALL STEEL CONNECTIONS SHALL BE PERFORMED UNDER THE DIRECT SUPERVISION OF A REGISTERED PROFESSIONAL ENGINEER IN THE STATE WHERE THE PROJECT IS LOCATED, EMPLOYED BY THE FABRICATOR. CALCULATIONS SEALED BY THE FABRICATOR'S PROFESSIONAL ENGINEER MUST BE SUBMITTED IF REQUESTED.

4. STRUCTURAL STEEL NOT EXPOSED TO WEATHER SHALL BE LEFT UNPAINTED UNLESS NOTED OTHERWISE IN THE ARCHITECTURAL DRAWINGS AND/OR SPECIFICATIONS.

5. IT IS THE INTENTION OF THE PLANS AND SPECIFICATIONS THAT SHOP CONNECTIONS BE WELDED OR BOLTED AND THAT FIELD CONNECTIONS BE BOLTED, UNLESS DETAILED OTHERWISE ON THE DRAWINGS.

6. ALL TYPICAL BEAM SIMPLE CONNECTIONS SHALL BE STANDARD DOUBLE ANGLE OR SINGLE ANGLE FRAMED BEAM CONNECTIONS UNLESS NOTED OTHERWISE, SHEAR TAB CONNECTIONS MAY BE USED AT LOCATIONS WHERE DOUBLE ANGLE CONNECTIONS ARE NOT POSSIBLE. SEATED BEAM CONNECTIONS SHALL NOT BE USED UNLESS INDICATED ON THE DRAWINGS. PROVIDE FULL DEPTH SHEAR TAB IF BEAM FRAMES ON ONLY ONE SIDE OF A GIRDER.

7. DESIGN CONNECTIONS OF NON-COMPOSITE BEAMS TO SUPPORT A REACTION R (UNLESS SPECIFIED OTHERWISE) EQUAL TO ONE HALF THE TOTAL UNIFORM LOAD CAPACITY FROM THE TABLE OF UNIFORM LOAD CONSTANTS IN THE AISC MANUAL.

8. BEAM CONNECTIONS FOR COMPOSITE BEAMS SHALL BE DESIGNED FOR REACTIONS LISTED IN THE TABLE BELOW. ALL VALUES LISTED IN THE TABLE ARE LOAD RESISTANCE FACTOR DESIGN (LRFD).

BEAM SIZE	REACTION	BEAM SIZE	REACTION
W8	30 KIPS	W21	120 KIPS
W10	30 KIPS	W24	140 KIPS
W12	40 KIPS	W27	160 KIPS
W14	50 KIPS	W30	180 KIPS
W16	80 KIPS	W33	200 KIPS
W18	100 KIPS	W36	220 KIPS

9. ADD TO THE REACTION LISTED ABOVE, ANY LOADS OR REACTIONS OF MEMBERS SUPPORTED BY THE BEAM WITHIN THREE FEET OF BEAM END AND THE VERTICAL COMPONENTS OF FORCES IN BRACE MEMBERS FRAMING INTO THE BEAMS.

10. BRACING CONNECTIONS SHALL DEVELOP FULL TENSILE FORCES AT EACH END OF THE BRACING MEMBER UNLESS BRACING FORCES ARE SPECIFIED ON THE DRAWINGS.

11. ALL WELDING SHALL COMPLY TO THE AMERICAN WELDING SOCIETY STANDARD (AWS D1.1). ALL WELDED JOINTS SHALL BE DETAILED AS INDICATED BY THE PREQUALIFIED JOINT DETAILS IN THE STRUCTURAL WELDING CODE. WELD LENGTHS CALLED FOR ON THE PLANS ARE THE NET EFFECTIVE LENGTH REQUIRED. WELD SIZE SHALL BE AISC MINIMUM UNLESS A LARGER SIZE IS NOTED. ALL WELDS SHALL USE MINIMUM E70XX ELECTRODES.

12. ALL WELDING SHALL BE PERFORMED BY A WELDER CERTIFIED IN ACCORDANCE WITH THE AWS STANDARDS.

13. MISCELLANEOUS STEEL CONNECTIONS SHALL BE WELDED ALL AROUND WITH AISC MINIMUM FILLET WELD UNLESS A LARGER WELD IS SPECIFIED. STEEL MEMBERS CONTINUOUSLY ATTACHED SHALL BE STITCH WELDED TOGETHER WITH AISC MINIMUM 2" LONG FILLET WELD AT 12" O.C. UNLESS A LARGER WELD OR DIFFERENT GAGE IS SPECIFIED.

14. ALL BOLTS SHALL BE DESIGNED AS BEARING BOLTS WITH THREADS INCLUDED IN THE SHEAR PLANE. ALL BOLTS SHALL BE NEW AND NOT RE-USED. BOLT HOLES IN STEEL SHALL BE 1/16 INCH LARGER THAN NOMINAL SIZE OF BOLT USED, EXCEPT ANCHOR ROD HOLES. MINIMUM BOLT DIAMETER SHALL BE 3/4 INCH. ALL BOLTS SHALL BE TIGHTENED TO A SNUG-TIGHT POSITION, EXCEPT AT BRACES, MOMENT CONNECTIONS AND CONNECTIONS MARKED AS SLIP CRITICAL (SC) SHALL BE TIGHTENED USING LOAD INDICATING WASHERS OR TENSION BOLTS.

15. SHEAR STUDS AND THEIR INSTALLATION SHALL MEET ALL REQUIREMENTS OF AWS D1.1. STUD DIAMETER AND LENGTH SHALL BE 3/4 INCH DIAMETER X 4-3/16 INCH LONG BEFORE WELDING. STUDS SHALL BE WELDED IN THE FIELD (NOT THE SHOP) USING AUTOMATICALLY TIMED STUD WELDING EQUIPMENT. THE TOP FLANGE OF THE BEAM MUST BE UNPAINTED AND FREE OF HEAVY RUST, MILL SCALE AND OTHER FOREIGN MATERIALS.

16. ALL STEEL EXPOSED TO WEATHER OR OUTSIDE THE BUILDING'S WATERPROOFING, SUCH AS BRICK SHELF ANGLES, SHALL BE HOT-DIPPED GALVANIZED AFTER FABRICATION AS SPECIFIED BY THE STEEL STRUCTURES PAINTING COUNCIL (SSPC). THE ZINC COATING FOR STEEL SHAPES AND PLATES SHALL AVERAGE NOT LESS THAN 2.3 OZ. WITH NO INDIVIDUAL THICKNESS LESS THAN 2.0 OZ.

17. GALVANIZE ALL NUTS, BOLTS, AND WASHERS USED IN THE CONNECTION OF GALVANIZED STEEL.

18. GALVANIZED MEMBERS SHALL HAVE "Z.R.C. COLD GALVANIZING COMPOUND OR APPROVED EQUIVALENT APPLIED TO FIELD WELDED CONNECTIONS. SURFACE AREAS TO RECEIVE COLD GALVANIZING COMPOUND SHALL BE CLEAN OF DIRT AND DEBRIS PRIOR TO COMPOUND APPLICATION. SEE MANUFACTURER'S LITERATURE FOR ADDITIONAL RECOMMENDATIONS.

19. THE APPLICATION OF THE FIREPROOFING TO THE STEEL MEMBERS AND STEEL DECK IS THE RESPONSIBILITY OF THE CONTRACTOR. THE CONTRACTOR MUST ENFORCE THE REQUIREMENTS OF THE MANUFACTURER AND NOT IMPOSE ADDITIONAL LOADS, INCLUDING CONSTRUCTION LIVE LOADS, DURING THE APPLICATION AND CURING OF THE FIREPROOFING.

20. IN ADDITION TO ALL OF THE STEEL INDICATED ON THE DRAWINGS, THE CONTRACTOR SHALL PROVIDE FOR AN ALLOWANCE OF A NET 2 1/2 TONS OF STEEL TO BE FURNISHED, FABRICATED, DETAILED, AND ERECTED DURING THE PROGRESSION OF WORK AS MAY BE DIRECTED BY THE ENGINEER OF RECORD.

21. THE CONTRACTOR SHALL MAKE AN ALLOWANCE FOR THE ADJUSTMENT AND DETAILING OF STEEL DURING THE SHOP DRAWING REVIEW PROCESS.

22. MISCELLANEOUS STEEL FOR THE ATTACHMENT AND SUPPORT OF CAST STONE HAS BEEN INCLUDED ON THE STRUCTURAL PLANS TO PRESENT A POSSIBLE ATTACHMENT CONFIGURATION. THE STEEL SHOWN REPRESENTS ONLY ONE METHOD FOR SUCH SUPPORT. THE CAST STONE SUPPLIER/INSTALLER SHALL REVIEW THE CONSTRUCTION DOCUMENTS PRIOR TO BID AND DETERMINE THE ADEQUACY OF THE MISCELLANEOUS STEEL SHOWN AND THEIR PREFERRED METHOD OF ATTACHMENT. ANY CHANGES NECESSARY TO THE STRUCTURAL DRAWINGS AS A RESULT OF THAT REVIEW SHALL BE SUBMITTED TO THE ARCHITECT FOR APPROVAL AND BE INCLUDED IN THE CONTRACTOR'S BID. THE CONTRACTOR SHALL INCLUDE HIS/HER BID ON ALL NECESSARY MISCELLANEOUS STEEL REQUIRED TO SUPPORT THE CAST STONE.

H. OPEN WEB STEEL JOISTS AND JOIST GIRDERS

1. OPEN WEB STEEL JOISTS AND JOIST GIRDERS SHALL BE DESIGNED, MANUFACTURED, AND ERECTED PER THE CURRENT APPLICABLE ISSUE OF THE STANDARD SPECIFICATIONS FOR STEEL JOISTS (K SERIES), LONGSPAN STEEL JOISTS (LH SERIES), OR DEEP LONGSPAN JOISTS (DLH SERIES), OR SUPER LONGSPAN STEEL INSTITUTE AND AISC.

2. JOISTS AND JOIST GIRDERS SHALL BE CAMBERED FOR REALISTIC DEAD LOAD. PROVIDE STANDARD SJI CAMBER UNLESS SPECIFIED OTHERWISE ON THE DRAWINGS.

3. TOP CHORD OF JOISTS SHALL BE DOUBLE ANGLES OR TEES. PROVIDE TOP CHORD EXTENSIONS WHERE SHOWN ON THE DRAWINGS. JOISTS AND JOIST GIRDERS WITH BOTTOM CHORD EXTENSIONS SHALL NOT HAVE END CONNECTIONS MADE TO COLUMN STABILIZER PLATE.

4. PROVIDE FLAT BEARING FOR ALL JOISTS AND JOIST GIRDERS. PROVIDE SJI STANDARD DEPTH OF BEARING FOR ALL JOISTS AND JOIST GIRDERS. IF SUFFICIENT BEARING DOES NOT EXIST, STAGGER THE END OF EACH JOIST AND CENTER OF BEARING OVER THE CENTER OF SUPPORT. WHERE K SERIES JOISTS BEAR ON THE SAME BEAM AS LH AND DLH JOISTS, THE K SERIES JOIST SEATS SHALL MATCH THE DEPTH OF THE LH OR DLH JOIST SEATS.

5. COORDINATION OF ALL JOIST SEAT DEPTHS WITH STRUCTURAL STEEL ELEVATIONS SHALL BE THE RESPONSIBILITY OF THE CONTRACTOR AND STEEL FABRICATOR.

6. JOISTS AND JOIST GIRDERS SHALL BE SHOP PAINTED PER ARCHITECTURAL SPECIFICATIONS.

7. ALL JOISTS SHALL CARRY THE DESIGN LOADS AS SPECIFIED IN THE SJI LOAD TABLES AS THE MINIMUM REQUIREMENT. ADDITIONALLY, THE JOISTS SHALL BE DESIGNED TO CARRY ANY OTHER LOAD TYPES AND PATTERNS INDICATED ON THE STRUCTURAL DRAWINGS. REFER TO THE STRUCTURAL DRAWINGS FOR ANY OTHER LOADS REQUIRED TO BE CARRIED BY ANY JOIST.

8. STEEL JOIST MANUFACTURER SHALL SUBMIT SHOP DRAWINGS AND CALCULATIONS SEALED BY AN ENGINEER LICENSED IN THE STATE OF TEXAS. JOIST DESIGNS AND DRAWINGS SHALL INCLUDE BRIDGING AND OTHER MISCELLANEOUS ITEMS AS REQUIRED.

9. WHERE UPLIFT FORCES ARE A DESIGN CONSIDERATION, ROOF JOISTS SHALL BE ANCHORED TO RESIST SUCH FORCES. ROOF JOISTS SHALL BE DESIGNED FOR A NET UPLIFT PRESSURE SHOWN ON S103.

PROFESSIONAL SEAL

Matrix Structural Engineers
TBPE Firm Registration No. F-2640

STATE OF TEXAS
JAYNOOL A. KHAYRATTEE
66260
REGISTERED PROFESSIONAL ENGINEER

01/14/20

LOGO/CONTACT

MATRIX STRUCTURAL ENGINEERS
5177 Richmond Avenue, Suite 670
Houston, TX 77046-2401
Tel: 713.664.0130
Fax: 713.664.1370
MSE - 18134

DESIGN TEAM

Architectural
Martinez Architects

Civil Engineer
Maverick Engineering

Structural
Matrix Structural Engineers

MEP
DBR

Landscaping
KDC Associates

FIRE STATION #5

CITY OF MIDLAND

2200 W GOLF COURSE RD
MIDLAND, TX 79701

PROJECT No: **MA 18017**
DATE: **01/14/2020**

No.	Date	Description
	05/21/19	100% DD
	07/30/19	ISSUE FOR PERMIT
	01/14/20	99% CD

GENERAL NOTES

S101

I. STEEL COMPOSITE DECK

1. SCHEDULED FLOOR DECK SHALL BE 2VLI (18 GAUGE) AS MANUFACTURED BY VULCRAFT OR EQUIVALENT.

2. THE DESIGN, FABRICATION, AND ERECTION OF ALL FLOOR DECK SHALL CONFORM TO THE STEEL DECK INSTITUTE DESIGN MANUAL FOR COMPOSITE DECKS, FORM DECKS, AND ROOF DECKS AS PUBLISHED BY THE STEEL DECK INSTITUTE (SDI).

3. STEEL DECK SHALL BE MANUFACTURED FROM STEEL CONFORMING TO ASTM A 653-94, STRUCTURAL QUALITY GRADE 33 OR HIGHER. SHEET METAL ACCESSORIES SHALL CONFORM TO ASTM A653-94, STRUCTURAL QUALITY.

4. STEEL DECK SHALL BE GALVANIZED WITH A PROTECTIVE ZINC COATING CONFORMING TO ASTM A 653-94 G60 CLASS.

5. MINIMUM BEARING OF STEEL DECK ON SUPPORTS SHALL BE 2 INCHES. SHEETS SHALL BE ATTACHED TO ALL SUPPORTING STEEL MEMBERS BY WELDING AS INDICATED ON THE DRAWINGS AND IN ACCORDANCE WITH MANUFACTURER'S RECOMMENDATIONS. UPON COMPLETION OF ERECTION, ALL WELDS ON STEEL DECK AREAS EXPOSED TO WEATHER SHALL BE DE-SLAGGED, CLEANED AND TOUCHED-UP WITH A ZINC RICH PRIMER.

6. DECK ENDS SHALL BE BUTTED OVER SUPPORTS.

7. METAL DECK SPANS SHALL NOT EXCEED THE MAXIMUM CENTER TO CENTER SPANS AS REQUIRED BY SDI CRITERIA. WHERE POSSIBLE, ALL METAL DECK SHALL EXTEND OVER THREE OR MORE SUPPORTS. TWO SPAN DECK SHALL BE USED ONLY WHERE DECK LAYOUT DOES NOT PERMIT THE USE OF THREE SPANS. SINGLE SPAN DECK IS NOT PERMITTED. ALL DECK SHALL BE DESIGNED AS UNSHORED CONSTRUCTION UNLESS NOTED OTHERWISE.

8. THE USE OF ADMIXTURES IN CONCRETE CONTAINING CHLORIDE SALTS SHALL NOT BE PERMITTED FOR METAL DECK CONCRETE.

9. THE GENERAL CONTRACTOR SHALL INCLUDE IN THEIR BID ADDITIONAL CONCRETE REQUIRED FOR METAL DECK SLABS TO ACCOUNT FOR DECK DEFLECTION.

10. WELDING WASHERS SHALL BE USED ON ALL DECK UNITS WITH METAL THICKNESS LESS THAN 0.028 INCHES THICK. WELDING WASHERS SHALL BE A MINIMUM THICKNESS OF 0.0568 INCHES AND HAVE A NOMINAL 3/8 INCH DIAMETER HOLE. WHERE WELDING WASHERS ARE NOT REQUIRED A NOMINAL 5/8 INCH DIAMETER PUDDLE WELD SHALL BE USED. WELD METAL SHALL PENETRATE ALL LAYERS OF DECK MATERIAL AT END LAPS AND SIDE JOINTS AND SHALL HAVE GOOD FUSION TO THE SUPPORTING MEMBERS.

11. OPENINGS LESS THAN 6 INCHES SQUARE OR DIAMETER REQUIRE NO REINFORCEMENT. OPENINGS 6 INCHES TO 10 INCHES INCLUSIVE SHALL BE REINFORCED WITH A 20 GAUGE GALVANIZED PLATE WELDED TO THE DECK AT EACH CORNER AND 6 INCH MAXIMUM CENTERS WITH 5/8 INCH DIAMETER PUDDLE WELD OR SHEET METAL SCREWS. OPENINGS OVER 10 INCHES WIDE OR DIAMETER SHALL BE REINFORCED WITH AN ANGLE 2 1/2 X 2 1/2 X 1/4 FRAMING EACH SIDE OF THE OPENING AND SPANNING BETWEEN SUPPORTS FOR SPANS 4 FEET BUT LESS THAN 6 FEET. LARGER OPENINGS SHALL BE REFERRED TO THE ENGINEER OF RECORD FOR FRAMING.

12. METAL DECK MANUFACTURER SHALL FURNISH SHEET METAL CLOSURES AT ALL SLAB EDGES, COLUMNS, WALLS, AND OPENINGS UNLESS STEEL ANGLES OR PLATES ARE SPECIFIED IN DETAILS ON THE DRAWINGS. SUCH CLOSURES SHALL BE MINIMUM 14 GAGE COLD FORMED STEEL WELDED TO EDGE SUPPORTS WITH 1 INCH LONG WELD AT 12" MAXIMUM CENTERS. PROVIDE 2" MINIMUM BEARING OVER STEEL SUPPORT. CLOSURES AND SUPPORT WELDS SHALL BE DESIGNED TO SUPPORT THE WET CONCRETE WEIGHT AND A 150 POUND CONCENTRATED LOAD ACTING AT THE SLAB EDGE WITHOUT EXCEEDING A STRESS OF 0.8 FY; AND THE WET CONCRETE WEIGHT ALONE WITHOUT EXCEEDING A STRESS OF 0.6 FY AND A DEFLECTION OF 3/4" MAXIMUM. PROVIDE SHEET METAL CLOSURES FOR OPEN ENDS OF PANELS WHERE DECK STOPS OR CHANGES DIRECTION.

13. METAL DECK UNITS SHALL BE WELDED TO EACH STRUCTURAL STEEL SUPPORT AT EACH SIDE LAP AND AT RIBS IN BETWEEN WITH SPACING BETWEEN WELDS NOT TO EXCEED 12 INCHES ON CENTER (FOUR FASTENERS PER SHEET MINIMUM). SIDE LAP OF ADJACENT UNITS SHALL BE FASTENED BY SEAM WELDS, SO THAT SPACING BETWEEN SUPPORTS AND FASTENERS DOES NOT EXCEED 36 INCHES, OR SPACING INDICATED ON PLAN WHICHEVER IS SMALLER. BUTTON PUNCHED SIDE LAPS MAY ONLY BE USED WHEN INDICATED ON PLAN.

J. STEEL ROOF DECK (WITH RIGID INSULATION BOARD)

1. THE STEEL ROOF DECK SHALL BE OF THE TYPE AND GAUGE CALLED FOR ON DRAWINGS. STEEL DECK SHALL BE MANUFACTURED FROM STEEL CONFORMING TO ASTM A653 STRUCTURAL QUALITY GRADE 33 OR HIGHER. THE DESIGN, FABRICATION, AND ERECTION OF ALL ROOF DECK SHALL CONFORM TO THE SDI MANUAL FOR COMPOSITE DECKS, FORM DECKS, AND ROOF DECKS.

2. STEEL DECK SHALL BE GALVANIZED WITH A PROTECTIVE ZINC COATING CONFORMING TO ASTM A653-G90.

3. MINIMUM BEARING OF STEEL DECK ON SUPPORTS SHALL BE 2 INCHES. ALL 3 IN DEEP STEEL DECK SHALL HAVE A MINIMUM BEARING OF 3 INCHES. END LAPS OF SHEETS SHALL BE A MINIMUM OF 2 INCHES AND SHALL OCCUR OVER SUPPORTS. SHEETS SHALL BE ATTACHED TO SUPPORTING STEEL MEMBERS BY WELDING AS INDICATED ON THE DRAWINGS AND IN ACCORDANCE WITH MANUFACTURER'S RECOMMENDATIONS. UPON COMPLETION OF ERECTION, ALL WELDS ON STEEL DECK SHALL BE DE-SLAGGED, CLEANED, AND TOUCHED UP WITH A ZINC RICH PRIMER.

4. PROVIDE ROOF DECK CONSTRUCTION WHICH IS LISTED AND CONFORMS TO THE UL FIRE RESISTANCE DIRECTORY AND BUILDING MATERIALS DIRECTORY. DECK ATTACHMENT SHALL BE INCREASED ABOVE THE MINIMUM SPECIFIED HEREIN AS REQUIRED TO ACHIEVE A CLASS 90 UPLIFT RATING.

5. DECK SUPPORTED ON COLD-FORMED STEEL FRAMING SHALL BE ATTACHED TO EACH SUPPORT MEMBER USING #12 TEK SCREWS AT ALL RIBS WHERE SIDES LAP AND EACH RIB IN BETWEEN.

6. PROVIDE MINIMUM 20 GAUGE RIDGE AND VALLEY PLATES, MINIMUM 20 GAUGE CANT STRIPS, MINIMUM 14 GAUGE SUMP PANS, MINIMUM 20 GAUGE INSIDE OR OUTSIDE CLOSURE CHANNELS, MINIMUM 20 GAUGE BUTT STRIPS AT CHANGE OF DECK DIRECTIONS, MINIMUM 20 GAUGE FILLER SHEETS, AND RUBBER CLOSURES AS REQUIRED TO PROVIDE A FINISHED SURFACE FOR THE APPLICATION OF INSULATION AND ROOFING.

7. DO NOT HANG LOADS FROM METAL DECK. PROVIDE ENGINEERED STRUCTURAL SYSTEM TO HANG ALL LOADS FROM STEEL JOISTS OR BEAMS. THIS INCLUDES BUT IS NOT LIMITED TO METAL STUD SOFFIT OR CEILING FRAMING, MECHANICAL OR PLUMBING EQUIPMENT, ETC.

8. SEE ARCHITECTURAL, MECHANICAL, ELECTRICAL, ETC., FOR SIZES AND LOCATIONS OF DECK OPENINGS AND FOR DECK OPENINGS SMALLER THAN 10 INCHES NOT SHOWN ON THE STRUCTURAL DRAWINGS. ROOF OPENINGS LESS THAN 6 INCHES SQUARE OR DIAMETER REQUIRE NO REINFORCEMENT. OPENINGS 6 INCHES TO 10 INCHES INCLUSIVE SHALL BE REINFORCED WITH A 20 GAUGE GALVANIZED PLATE WELDED TO THE DECK AT EACH CORNER AND 6 INCHES O.C. WITH 5/8 INCH DIAMETER PUDDLE WELDS OR SHEET METAL SCREWS. SEE TYPICAL DETAILS FOR FRAMING REQUIREMENTS AT OPENINGS LARGER THAN 10 INCHES. OPENINGS LARGER THAN 6 FEET SHALL BE REFERRED TO THE ENGINEER FOR FRAMING.

9. METAL DECK SPANS SHALL NOT EXCEED THE MAXIMUM CENTER TO CENTER SPANS AS REQUIRED BY SDI. WHERE POSSIBLE, ALL METAL DECK SHALL EXTEND OVER THREE OR MORE SUPPORTS. TWO SPAN DECK SHALL BE USED ONLY WHERE DECK LAYOUT DOES NOT PERMIT THE USE OF THREE SPANS. SINGLE SPAN DECK IS NOT PERMITTED.

K. COLD-FORMED STEEL

1. ALL ASPECTS OF WORK RELATING TO COLD-FORMED (LIGHT GAGE) STEEL CONSTRUCTION SHALL CONFORM TO THE FOLLOWING CODES AND SPECIFICATIONS:

   2012 EDITION OF THE AISI SPECIFICATION FOR THE DESIGN OF COLD-FORMED STEEL STRUCTURAL MEMBERS, INCLUDING THE 2010 SUPPLEMENT

2. COLD-FORMED STEEL MEMBERS SHALL BE OF THE SIZE, GAUGE, AND SPACING SHOWN ON THE DRAWINGS. FLANGE WIDTHS SHALL BE 1 5/8" WITH 1/2" RETURNS UNLESS SPECIFIED OTHERWISE.

3. ALL FRAMING MEMBERS SHALL BE MANUFACTURED FROM CORROSION RESISTANT STEEL CONFORMING TO ASTM A653 (G60). 25 GAUGE THROUGH 18 GAUGE MEMBERS SHALL BE FORMED FROM STEEL HAVING A MINIMUM 33 KSI YIELD POINT PER ASTM A653 GRADE 33. 16 GAUGE THROUGH 12 GAUGE MEMBERS SHALL BE FORMED FROM STEEL HAVING A MINIMUM 50 KSI YIELD POINT PER ASTM A446 GRADE 50.

4. SPLICES IN FRAMING COMPONENTS EXCEPT RUNNERS AND TRACKS SHALL NOT BE PERMITTED.

5. AT LOAD BEARING WALLS SUPPORTING FLOOR OR ROOF JOISTS, LOCATE STUDS DIRECTLY UNDER THE JOISTS OR PROVIDE LOAD DISTRIBUTING MEMBER BETWEEN STUDS TO SUPPORT JOISTS.

6. FASTENING OF COMPONENTS SHALL BE WITH SELF-DRILLING SCREWS OR WELDING. WELDING SHALL BE DONE USING FILLET, PLUG, BUTT OR SEAM WELDS WITH A MINIMUM 3/32 IN. AWS TYPE 6013 WELDING RODS. WELD AREAS SHOULD BE RE-TOUCHED WITH THE APPROPRIATE PAINT OR COLD-GALVANIZING TO RETAIN CORROSION RESISTANCE. ALL WORK SHALL BE COMPLETED BY QUALIFIED WELDERS IN ACCORDANCE WITH AWS D1.3 STANDARDS.

7. PROVIDE HORIZONTAL BRIDGING IN ALL STUD SYSTEMS AT 4'-0" O.C. VERTICALLY FOR AXIALLY LOADED STUDS AND AT 6'-0" O.C. FOR NON-LOAD BEARING STUDS. WELD AT EACH STUD INTERSECTION.

8. SCREWS SHALL BE SELF-DRILLING AND OF TYPE S-12, ASTM C-954, EXCEPT THAT TYPE S, ASTM C-1002 MAY BE USED FOR 20 GAUGE OR 22 GAUGE MATERIAL ONLY. SCREWS SHALL BE 3/8" TO 1/2" LONGER THAT TOTAL MATERIAL THICKNESS.

9. SHEATHING MATERIALS FOR SHEAR WALLS MUST EXTEND AND BE CONNECTED TO THE TOP AND BOTTOM TRACKS.

10. STEEL STRUCTURAL STUD TRACK OF THE SAME GAUGE AS THE STUDS SHALL BE USED AT THE TOP AND BOTTOM OF ALL STUD WALLS UNLESS NOTED OTHERWISE. STUDS SHALL SIT FLAT AGAINST THE WEB OF THE STUD TRACK AND BE ATTACHED WITH 1-#8 X 5/8" SCREW EACH SIDE OF EACH STUD.

11. WEB PUNCH-OUTS SHOULD BE COORDINATED WITH BRACING AND UTILITY REQUIREMENTS. WEB PUNCH-OUTS OR WEB OPENINGS SHALL BE LOCATED A MINIMUM OF 6" OR MEMBER DEPTH, WHICHEVER IS GREATER, FROM STUD OR JOIST BEARING POINTS.

12. ALL FRAMING COMPONENTS SHALL BE CUT SQUARELY FOR ATTACHMENT TO PERPENDICULAR MEMBERS, OR AS REQUIRED FOR AN ANGULAR FIT AGAINST ABUTTING MEMBERS.

13. FOR NON-LOAD BEARING STUDS, CONNECTIONS SHALL ACCOUNT FOR THE DEFLECTION OF THE STRUCTURAL MEMBERS TO WHICH THE STUDS ARE ATTACHED (1/2" MINIMUM). PROVIDE SLIDING CLIPS AND/OR SLIP TRACKS.

14. JACK STUDS OR CRIPPLES SHALL BE INSTALLED BELOW WINDOW SILLS, ABOVE WINDOW AND DOOR HEADS, AND ELSEWHERE TO FURNISH SUPPORT, AND SHALL BE SECURELY ATTACHED TO CONNECTING MEMBERS.

15. PRIOR TO FABRICATION, THE CONTRACTOR SHALL SUBMIT ERECTION DRAWINGS TO THE ARCHITECT AND ENGINEER OF RECORD FOR REVIEW AND APPROVAL.

16. TRACK SHALL BE SECURELY ANCHORED TO THE SUPPORTING STRUCTURE. ABUTTING PIECES OF TRACK SHALL BE SECURELY SPLICED TOGETHER.

17. THE DESIGN OF ALL COLD-FORMED STEEL SHALL BE PERFORMED BY THE COLD-FORMED METAL CONTRACTOR. THE DESIGN SHALL INCLUDE MEMBER SIZES AND CONNECTION. THE DESIGN SHALL CONSIDER MEMBER DIMENSIONS NOTED ON THE DRAWINGS. THE COLD-FORMED CONTRACTOR SHALL SUPPLY DRAWINGS SEALED BY AN ENGINEER REGISTERED IN THE STATE WHERE THE PROJECT IS LOCATED. THE OUT-OF-PLANE DEFLECTION OF STUDS SHALL BE LIMITED TO H/600 (H = UNSUPPORTED HEIGHT OF STUDS) IF USED FOR MASONRY OR STONE BACKUP. FOR OTHER CONDITIONS THE DEFLECTION SHALL BE LIMITED TO H/360.

18. COLD-FORMED STEEL FRAMING SHALL HAVE A MINIMUM BASE METAL THICKNESS OF 0.43 (18 GA.) IF USED FOR MASONRY OR STONE BACKUP.

19. DO NOT HANG STUD FRAMING FROM METAL DECK ROOF. FRAMING SHALL BE SUPPORTED BETWEEN ROOF FRAMING MEMBERS.

L. CONCRETE MASONRY

1. ALL MASONRY MATERIALS AND CONSTRUCTION SHALL CONFORM TO THE RECOMMENDATIONS OF THE NATIONAL CONCRETE MASONRY ASSOCIATION AND THE FOLLOWING CODES AND SPECIFICATIONS:

   ACI 530-13 BUILDING CODE REQUIREMENTS AND SPECIFICATION FOR MASONRY STRUCTURES

2. ALL CONCRETE MASONRY UNITS (CMU) SHALL CONFORM TO ASTM C90. UNLESS SPECIFIED OTHERWISE, CMU SHALL BE LIGHTWEIGHT (LESS THAN 110 PCF, OVEN DRY UNIT WEIGHT). THE MINIMUM COMPRESSIVE STRENGTH OF MASONRY (F'M) SHALL BE 2000 PSI AS DETERMINED BY THE UNIT STRENGTH METHOD OR BY THE PRISM TEST METHOD.

3. UNLESS SPECIFIED OTHERWISE, ALL MORTARS AND THE MATERIALS THEREIN SHALL CONFORM TO THE STANDARD SPECIFICATIONS OF MASONRY UNITS, ASTM C270, TYPE S EXCEPT FOR MASONRY IN CONTACT WITH THE EARTH SHALL BE TYPE M. MORTAR SHALL HAVE MINIMUM AVERAGE STRENGTH OF 2000 PSI FOR TYPE M, OR S.

4. ALL GROUT SHALL BE FINE GROUT CONTAINING SAND, PORTLAND CEMENT, AND LIME (OPTIONAL) FOR GROUT SPACES LESS THAN 2 INCHES IN ANY HORIZONTAL DIRECTION, UNLESS SPECIFIED OTHERWISE. GROUT SHALL ATTAIN A MINIMUM 28 DAYS COMPRESSIVE STRENGTH OF 2500 PSI TESTED ACCORDING TO ASTM C476.

5. CONTROL JOINTS SHALL BE LOCATED PER ARCHITECTURAL DRAWINGS AND SPECIFICATIONS OR AT A MAXIMUM SPACING OF 24 FEET ON CENTERS OR 3 TIMES THE WALL HEIGHT, WHICHEVER IS LESS. ALL MASONRY UNITS SHALL BE PLACED IN RUNNING BOND.

6. PROVIDE HORIZONTAL JOINT REINFORCING (TRUSS OR LADDER TYPE, 9 GAUGE) AT 16 INCHES ON CENTER FOR ALL CMU WALLS LAID IN A RUNNING BOND AND AT 8 INCHES ON CENTER FOR ALL CMU WALL NOT LAID IN A RUNNING BOND. HORIZONTAL JOINT REINFORCING SHALL BE LAPPED A MINIMUM OF 6". REINFORCEMENT SHALL CONFORM TO ASTM A951 AND SHALL BE HOT DIP GALVANIZED IN ACCORDANCE WITH ASTM A153.

7. ALL HORIZONTAL REINFORCING STEEL IN BOND BEAMS AND LINTEL BLOCK UNITS SHALL BE CONTINUOUS AND UNITS SHALL BE SOLID GROUTED. PROVIDE 48 TIMES BAR DIAMETER LAP FOR HORIZONTAL REINFORCING IN BOND BEAMS. NO SPLICES SHALL BE PROVIDED FOR HORIZONTAL REINFORCING IN BLOCK LINTELS.

8. GROUT CELLS SOLID WHERE VERTICAL BARS ARE SHOWN ON THE DRAWINGS. VERTICAL BARS SHALL EXTEND FROM BOTTOM TO THE TOP OF THE WALL. AT EACH VERTICAL BAR, PROVIDE MATCHING BAR SIZE DOWEL INTO FOUNDATIONS. PROVIDE MINIMUM 48 TIMES BAR DIAMETER SPLICE FOR VERTICAL BARS WHERE REQUIRED AND/OR SHOWN ON THE DRAWINGS UNLESS NOTED OTHERWISE.

9. GROUT LIFTS SHALL TERMINATE TO FORM A GROUT KEY A MINIMUM OF 1 1/2" BELOW MORTAR JOINTS WHEN SUBSEQUENT GROUT LIFTS WILL HAPPEN AFTER PREVIOUS GROUT LIFTS HAVE SET. GROUT KEYS IN BOND BEAMS OR LINTELS SHALL NOT BE PERMITTED.

10. MAXIMUM GROUT POUR HEIGHT SHALL BE 5' - 4" (8 BLOCK COURSES).

11. PROVIDE A BOND BEAM AT THE TOP OF ALL CMU WALLS AND REINFORCE WITH (2) - #5 CONTINUOUS UNLESS NOTED OTHERWISE. BOND BEAM REINFORCING SHALL NOT BE CONTINUED THROUGH CONTROL JOINT LOCATIONS.

12. PROVIDE BOND BEAMS AT A MAXIMUM OF 48 INCHES ON CENTER IN ALL EXTERIOR AND LOAD BEARING CMU WALLS NOT LAID IN A RUNNING BOND (E.G. STACK BOND) REINFORCED WITH (2) - #5 CONTINUOUS UNLESS NOTED OTHERWISE BOND BEAM REINFORCEMENT SHALL BE DISCONTINUED AT CONTROL JOINTS.

13. AT THE END OF EACH DAY AND DURING INCLEMENT WEATHER, ALL UNFINISHED MASONRY WORK SHALL BE COVERED AT THE TOP OF WALL AND EXTEND DOWN ALL SIDES A MINIMUM OF 24".

14. SEE TYPICAL DETAILS FOR INTERIOR WALL HEIGHT, BRACINGS AND REINFORCING REQUIREMENTS.

15. MECHANICAL PIPES AND ELECTRICAL CONDUITS WHICH PASS THROUGH MASONRY WALLS DO NOT REQUIRE SLEEVES, UNLESS NOTED OTHERWISE IN THE PROJECT SPECIFICATIONS, MECHANICAL OR ELECTRICAL DRAWINGS. IF SLEEVES ARE REQUIRED, INSTALL SLEEVES BEFORE GROUTING. DO NOT CUT ANY REINFORCING WHICH MAY INTERFERE WITH SLEEVE PLACEMENT. CORING OPENINGS IN GROUTED MASONRY IS NOT PERMITTED. NOTIFY THE STRUCTURAL ENGINEER IN ADVANCE OF CONDITIONS NOT SHOWN ON THE STRUCTURAL DRAWINGS. NO PIPES OR ELECTRICAL CONDUIT SHALL PASS THROUGH MASONRY LINTELS UNLESS SPECIFICALLY DETAILED.

16. FOR ANCHORED MASONRY VENEER, THE DISTANCE BETWEEN THE INSIDE FACE OF THE VENEER AND THE COLD-FORMED STEEL, MASONRY, WOOD, OR CONCRETE BACKUP SHALL BE AS SPECIFIED BY THE ARCHITECT, BUT NOT GREATER THAN 4 1/2". A MINIMUM 1 INCH AIR SPACE SHALL BE PROVIDED.

17. ANCHORED MASONRY VENEER NOT LAID IN A RUNNING BOND SHALL HAVE A JOINT REINFORCEMENT OF AT LEAST ONE WIRE, OF SIZE W1.7, SPACED AT A MAXIMUM OF 18 INCHES ON CENTER VERTICALLY.

18. SPECIAL INSPECTION, IN ACCORDANCE WITH THE BUILDING CODE REFERENCED ABOVE, SHALL BE PROVIDED FOR ALL CMU WALLS.

M. SUBMITTALS

1. THE GENERAL CONTRACTOR SHALL SUBMIT FOR ENGINEER REVIEW SHOP DRAWINGS FOR THE FOLLOWING ITEMS:

   CONCRETE MIX DESIGNS
   REINFORCING STEEL
   STRUCTURAL STEEL (*,#)
   METAL DECK
   BAR JOISTS (*)
   MISCELLANEOUS STEEL
   STEEL STAIR (*,#)
   CONCRETE MASONRY (MATERIAL AND REBAR PLACEMENT PLANS)

   ITEMS MARKED (*) SHALL HAVE SHOP DRAWINGS SEALED BY A REGISTERED ENGINEER IN THE STATE WHERE THE PROJECT IS LOCATED. ITEMS MARKED (#) SHALL BE SUBMITTED TO ENGINEER FOR OWNER'S RECORD ONLY AND WILL NOT HAVE ENGINEER'S SHOP DRAWING STAMP. ITEMS MARKED (*) SHALL HAVE SEALED STRUCTURAL CALCULATIONS SUBMITTED TO ENGINEER FOR OWNER'S RECORD.

2. ALL SHOP DRAWINGS MUST BE REVIEWED AND SEALED BY THE GENERAL CONTRACTOR PRIOR TO SUBMITTAL.

3. CONTRACTOR SHALL SUBMIT ELECTRONIC COPIES (E.G. PDFS) OF ALL SHOP DRAWINGS SPECIFIED TO BE RETURNED BY THE ENGINEER.

4. THE OMISSION FROM THE SHOP DRAWINGS OF ANY MATERIAL REQUIRED BY THE CONTRACT DOCUMENTS TO BE FURNISHED SHALL NOT RELIEVE THE CONTRACTOR OF THE RESPONSIBILITY OF FURNISHING AND INSTALLING SUCH MATERIALS, REGARDLESS OF WHETHER THE SHOP DRAWINGS HAVE BEEN REVIEWED AND APPROVED.

5. SUBMIT TWO COPIES OF MANUFACTURER'S LITERATURE FOR ALL MATERIALS AND PRODUCTS USED IN CONSTRUCTION ON THE PROJECT.

6. THE USE OF REPRODUCTIONS OF THESE CONTRACT DOCUMENTS BY ANY CONTRACTOR, SUBCONTRACTOR, ERECTOR, FABRICATOR, OR MATERIAL SUPPLIER IN LIEU OF PREPARATION OF SHOP DRAWINGS SIGNIFIES HIS ACCEPTANCE OF ALL INFORMATION SHOWN HEREIN AS CORRECT, AND OBLIGATES HIMSELF TO ANY JOB EXPENSE, REAL OR IMPLIED, ARISING DUE TO ANY ERRORS THAT MAY OCCUR HEREIN.

N. SPECIAL INSPECTION

1. ALL ASPECTS OF WORK RELATING TO SPECIAL INSPECTION SHALL CONFORM TO THE FOLLOWING CODES AND SPECIFICATIONS:

   2015 INTERNATIONAL BUILDING CODE (CHAPTER 17).

2. THE OWNER'S SPECIAL INSPECTOR SHALL BE A QUALIFIED PERSON WHO SHALL DEMONSTRATE COMPETENCE, TO THE SATISFACTION OF THE BUILDING OFFICIAL, FOR INSPECTION OF THE PARTICULAR TYPE OF CONSTRUCTION OR OPERATION REQUIRING SPECIAL INSPECTION.

3. PRIOR TO THE BEGINNING OF CONSTRUCTION, THE ARCHITECT (OR ENGINEER) SHALL CALL A PRE-CONSTRUCTION MEETING WITH THE ARCHITECT, ENGINEER, BUILDING OFFICIAL, CONTRACTOR AND SPECIAL INSPECTORS TO REVIEW THE SPECIAL INSPECTION REQUIREMENTS.

4. DUTIES OF THE OWNER'S SPECIAL INSPECTOR INCLUDE (BUT ARE NOT LIMITED TO):

   A. ACKNOWLEDGE THE SPECIAL INSPECTION AND TESTING AGREEMENT PROVIDED BY THE LOCAL JURISDICTION.

   B. THE OWNER'S SPECIAL INSPECTOR SHALL OBSERVE THE WORK FOR CONFORMANCE WITH THE APPROVED CONSTRUCTION DOCUMENTS. ALL DISCREPANCIES SHALL BE BROUGHT TO THE IMMEDIATE ATTENTION OF THE CONTRACTOR FOR CORRECTION, THEN, IF UNCORRECTED TO THE REGISTERED DESIGN PROFESSIONAL IN RESPONSIBLE CHARGE AND TO THE BUILDING OFFICIAL.

   C. THE OWNER'S SPECIAL INSPECTOR SHALL FURNISH INSPECTION REPORTS FOR EACH INSPECTION TO THE BUILDING OFFICIAL, ARCHITECT, REGISTERED DESIGN PROFESSIONAL IN RESPONSIBLE CHARGE, CONTRACTOR AND (OTHER DESIGNATED PARTIES), IN A TIMELY MANNER, AS ESTABLISHED AT THE PRE-CONSTRUCTION MEETING.

5. THE OWNER'S SPECIAL INSPECTOR SHALL SUBMIT A FINAL REPORT STATING WHETHER THE WORK REQUIRING SPECIAL INSPECTION WAS, TO THE BEST OF THE SPECIAL INSPECTOR'S KNOWLEDGE, IN CONFORMANCE WITH THE APPROVED CONSTRUCTION DOCUMENTS AND THE APPLICABLE WORKMANSHIP PROVISIONS OF THE INTERNATIONAL BUILDING CODE.

5. DUTIES OF THE CONTRACTOR INCLUDE (BUT ARE NOT LIMITED TO):

   A. NOTIFY THE SPECIAL INSPECTOR THAT THE WORK IS READY FOR INSPECTION AT LEAST 24 HOURS BEFORE SUCH INSPECTION.

   B. ALL WORK REQUIRING SPECIAL INSPECTION SHALL REMAIN ACCESSIBLE AND EXPOSED UNTIL IT HAS BEEN OBSERVED AND INDICATED TO BE IN CONFORMANCE BY THE SPECIAL INSPECTOR AND APPROVED BY THE BUILDING OFFICIAL.

   C. PROVIDE THE SPECIAL INSPECTOR WITH ACCESS TO APPROVED CONSTRUCTION DOCUMENTS AT JOBSITE.

   D. MAINTAIN AT THE JOBSITE COPIES OF ALL REPORTS SUBMITTED BY THE SPECIAL INSPECTOR.

6. CONTINUOUS SPECIAL INSPECTION REFERS TO INSPECTIONS BY THE SPECIAL INSPECTOR WHO IS CONTINUOUSLY PRESENT WHEN AND WHERE THE WORK TO BE INSPECTED IS BEING PERFORMED.

7. PERIODIC SPECIAL INSPECTION REFERS TO INSPECTIONS BY THE SPECIAL INSPECTOR WHO IS INTERMITTENTLY PRESENT WHERE THE WORK TO BE INSPECTED HAS BEEN OR IS BEING PERFORMED.

8. SPECIAL INSPECTIONS AND TESTING SHALL BE REQUIRED FOR THE FOLLOWING TYPES OF WORK LISTED BELOW. SPECIAL INSPECTIONS AND TESTING SHALL FOLLOW THE REQUIREMENTS OF THE BUILDING AND MATERIAL CODE REFERENCES AND TABLES. IN THE EVENT OF A CONFLICT BETWEEN REFERENCES, THE OWNER'S SPECIAL INSPECTOR SHALL FOLLOW THE MORE STRINGENT REQUIREMENT.

SOILS	IBC 1705.6 AND TABLE 1705.6, APPROVED GEOTECHNICAL REPORT AND CONSTRUCTION DOCUMENTS
CONCRETE	IBC 1705.3 AND TABLE 1705.3
STEEL	IBC 1705.2 AND TABLE 1705.2.3 AND AISC 360 CHAPTER N AND SDI QA/QC DOCUMENT
SHOP FABRICATION	IBC 1704.2.5 (NOT REQUIRED IF FABRICATOR IS APPROVED IN ACCORDANCE WITH IBC 1704.2.5.1.
MASONRY	IBC 1705.4, TMS 402/ACI 530/ASCE 5 SECTION 3.1 AND TABLE 3.1.3, TMS 602/ACI 530.1/ASCE 6 SECTION 1.6 AND TABLE 5
SPRAYED FIRE-RESISTANT MATERIALS	IBC 1705.14 AND CONSTRUCTION DOCUMENTS
MASTIC AND INTUMESCENT FIRE-RESISTANT COATINGS	IBC 1705.15 AND AWCI 12-B AND CONSTRUCTION DOCUMENTS
EXTERIOR INSULATION AND FINISH SYSTEMS (EIFS)	IBC 1705.16
EXPANSION/EPOXY ANCHORS	MANUFACTURER'S ICC REPORT

PROFESSIONAL SEAL

Matrix Structural Engineers
TBPE Firm Registration No. F-2640

01/14/20

LOGO/CONTACT

MATRIX STRUCTURAL ENGINEERS

5177 Richmond Avenue, Suite 670
Houston, TX 77056-2401
Tel: 713.664.0133
Fax: 713.664.1370
MSE - 18134

DESIGN TEAM

Architectural
Martinez Architects

Civil Engineer
Maverick Engineering

Structural
Matrix Structural Engineers

MEP
DBR

Landscaping
KDC Associates

FIRE STATION #5

CITY OF MIDLAND
2200 W GOLF COURSE RD
MIDLAND, TX 79701

PROJECT No: **MA 18017**
DATE: **01/14/2020**

No.	Date	Description
	05/21/19	100% DD
	07/30/19	ISSUE FOR PERMIT
	01/14/20	99% CD

GENERAL NOTES

S102

4.1275

P. STRUCTURAL CLAY MASONRY

1. ALL MASONRY MATERIALS AND CONSTRUCTION SHALL CONFORM TO THE RECOMMENDATIONS OF THE NATIONAL CONCRETE MASONRY ASSOCIATION AND THE FOLLOWING CODES AND SPECIFICATIONS:

ACI 530-11 BUILDING CODE REQUIREMENTS AND SPECIFICATION FOR MASONRY STRUCTURES

2. ALL CLAY MASONRY UNITS SHALL CONFORM TO ASTM C34. UNLESS SPECIFIED OTHERWISE. THE MINIMUM COMPRESSIVE STRENGTH OF MASONRY (F'M) SHALL BE 3000 PSI AS DETERMINED BY THE UNIT STRENGTH METHOD OR BY THE PRISM TEST METHOD. CLAY MASONRY SHALL HAVE MINIMUM AVERAGE COMPRESSIVE STRENGTH OF 8250 PSI FOR TYPE M, OR S MORTAR. MAXIMUM SATURATION COEFFICIENT SHALL BE 0.78 TESTED ACCORDING TO ASTM C67. THE INITIAL RATE OF ABSOPRTION SHALL BE A MINIMUM OF 5 GAL./30 SQ. INCHES AND A MAXIMUM OF 30 GAL./30 SQ. INCHES TESTED ACCORDING TO ASTM C67.

3. UNLESS SPECIFIED OTHERWISE, ALL MORTARS AND THE MATERIALS THEREIN SHALL CONFORM TO THE STANDARD SPECIFICATIONS OF MASONRY UNITS, ASTM C270, TYPE S EXCEPT FOR MASONRY IN CONTACT WITH THE EARTH SHALL BE TYPE M.

4. ALL GROUT SHALL BE FINE GROUT CONTAINING SAND, PORTLAND CEMENT, AND LIME (OPTIONAL) FOR GROUT SPACES LESS THAN 2 INCHES IN ANY HORIZONTAL DIRECTION, UNLESS SPECIFIED OTHERWISE. GROUT SHALL ATTAIN A MINIMUM 28 DAYS COMPRESSIVE STRENGTH EQUAL TO F'M BUT SHALL NOT EXCEED 6000 PSI TESTED ACCORDING TO ASTM C476.

5. SUBMIT TEST REPORTS PERFORMED IN ACCORDANCE WITH ASTM C67 FOR EACH TYPE OF CLAY MASONRY SPECIFIED ON CONTRACT DOCUMENTS. TEST REPORTS SHALL INCLUDE"
   A. COMPRESSIVE STRENGTH
   B. MODULUS OF RUPTURE
   C. 24 HOUR COLD WATER ABSORPTION
   D. 5 HOUR BOIL WATER ABSORPTION
   E. SATURATION COEFFICIENT
   F. INITIAL RATE OF ABSORPTION
      E. EFFLORESCENCE (MASONRY EXPOSED TO WEATHER SHALL BE RATED AS "NOT EFFLORESCED"
   H. WEATHER CLASSIFICATION

6. CONTROL JOINTS SHALL BE LOCATED PER ARCHITECTURAL DRAWINGS AND SPECIFICATIONS OR AT A MAXIMUM SPACING OF 24 FEET ON CENTERS OR 3 TIMES THE WALL HEIGHT, WHICHEVER IS LESS. ALL MASONRY UNITS SHALL BE PLACED IN RUNNING BOND.

7. PROVIDE HORIZONTAL JOINT REINFORCING (TRUSS OR LADDER TYPE, 9 GAUGE) AT 16 INCHES ON CENTER FOR ALL CLAY MASONRY WALLS LAID IN A RUNNING BOND AND AT 8 INCHES ON CENTER FOR ALL CLAY MASONRY WALL NOT LAID IN A RUNNING BOND. HORIZONTAL JOINT REINFORCING SHALL BE LAPPED A MINIMUM OF 6". REINFORCEMENT SHALL CONFORM TO ASTM A951 AND SHALL BE HOT DIP GALVANIZED IN ACCORDANCE WITH ASTM A153.

8. ALL HORIZONTAL REINFORCING STEEL IN BOND BEAMS AND LINTEL BLOCK UNITS SHALL BE CONTINUOUS AND UNITS SHALL BE SOLID GROUTED. PROVIDE 48 TIMES BAR DIAMETER LAP FOR HORIZONTAL REINFORCING IN BOND BEAMS. NO SPLICES SHALL BE PROVIDED FOR HORIZONTAL REINFORCING IN BLOCK LINTELS.

9. GROUT CELLS SOLID WHERE VERTICAL BARS ARE SHOWN ON THE DRAWINGS. VERTICAL BARS SHALL EXTEND FROM BOTTOM TO THE TOP OF THE WALL. AT EACH VERTICAL BAR, PROVIDE MATCHING BAR SIZE DOWEL INTO FOUNDATIONS. PROVIDE MINIMUM 48 TIMES BAR DIAMETER SPLICE FOR VERTICAL BARS WHERE REQUIRED AND/OR SHOWN ON THE DRAWINGS UNLESS NOTED OTHERWISE.

10. GROUT LIFTS SHALL TERMINATE TO FORM A GROUT KEY A MINIMUM OF 1 1/2" BELOW MORTAR JOINTS WHEN SUBSEQUENT GROUT LIFTS WILL HAPPEN AFTER PREVIOUS GROUT LIFTS HAVE SET. GROUT KEYS IN BOND BEAMS OR LINTELS SHALL NOT BE PERMITTED.

11. MAXIMUM GROUT POUR HEIGHT SHALL BE 5' - 4" (8 BLOCK COURSES).

12. PROVIDE A BOND BEAM AT THE TOP OF ALL CLAY MASONRY WALLS AND REINFORCE WITH (2) - #5 CONTINUOUS UNLESS NOTED OTHERWISE. BOND BEAM REINFORCING SHALL NOT BE CONTINUED THROUGH CONTROL JOINT LOCATIONS.

13. PROVIDE BOND BEAMS AT A MAXIMUM OF 48 INCHES ON CENTER IN ALL EXTERIOR AND LOAD BEARING CLAY MASONRY WALLS NOT LAID IN A RUNNING BOND (E.G. STACK BOND) REINFORCED WITH (2) - #5 CONTINUOUS UNLESS NOTED OTHERWISE BOND BEAM REINFORCEMENT SHALL BE DISCONTINUED AT CONTROL JOINTS.

14. AT THE END OF EACH DAY AND DURING INCLEMENT WEATHER, ALL UNFINISHED MASONRY WORK SHALL BE COVERED AT THE TOP OF WALL AND EXTEND DOWN ALL SIDES A MINIMUM OF 24".

15. SEE TYPICAL DETAILS FOR INTERIOR WALL HEIGHT, BRACINGS AND REINFORCING REQUIREMENTS.

16. MECHANICAL PIPES AND ELECTRICAL CONDUITS WHICH PASS THROUGH MASONRY WALLS DO NOT REQUIRE SLEEVES, UNLESS NOTED OTHERWISE IN THE PROJECT SPECIFICATIONS, MECHANICAL OR ELECTRICAL DRAWINGS. IF SLEEVES ARE REQUIRED, INSTALL SLEEVES BEFORE GROUTING. DO NOT CUT ANY REINFORCING WHICH MAY INTERFERE WITH SLEEVE PLACEMENT. CORING OPENINGS IN GROUTED MASONRY IS NOT PERMITTED. NOTIFY THE STRUCTURAL ENGINEER IN ADVANCE OF CONDITIONS NOT SHOWN ON THE STRUCTURAL DRAWINGS. NO PIPES OR ELECTRICAL CONDUIT SHALL PASS THROUGH MASONRY LINTELS UNLESS SPECIFICALLY DETAILED.

17. ALL REINFORCED MASONRY WALLS WITH OPENINGS UP TO THREE (3) FEET WIDE, SHALL HAVE ONE VERTICAL BAR MINIMUM AT EACH SIDE OF OPENINGS. FOR OPENINGS LARGER THAN 3 FEET WIDE, PROVIDE TWO (2) VERTICAL BARS AT EACH SIDE OF OPENINGS. REINFORCING AT EDGES OF OPENING SHALL MATCH TYPICAL VERTICAL WALL REINFORCING (UNLESS NOTED OTHERWISE) AND SHALL EXTEND TO THE TOP OF WALL.

18. ALL REINFORCED MASONRY WALL CORNERS AND INTERSECTIONS SHALL HAVE ONE VERTICAL BAR (MINIMUM) IN GROUTED CELL. REINFORCING SHALL MATCH TYPICAL WALL VERTICAL REINFORCEMENT.

19. PROVIDE ONE VERTICAL BAR (MINIMUM) IN THE FIRST CELL EACH SIDE OF CONTROL JOINTS. REINFORCING SHALL MATCH TYPICAL VERTICAL WALL REINFORCING (UNLESS NOTED OTHERWISE) AND SHALL EXTEND TO THE TOP OF WALL.

20. FOR ANCHORED MASONRY VENEER, THE DISTANCE BETWEEN THE INSIDE FACE OF THE VENEER AND THE COLD-FORMED STEEL, MASONRY, WOOD, OR CONCRETE BACKUP SHALL BE AS SPECIFIED BY THE ARCHITECT, BUT NOT GREATER THAN 4 1/2". A MINIMUM 1 INCH AIR SPACE SHALL BE PROVIDED.

21. ANCHORED MASONRY VENEER NOT LAID IN A RUNNING BOND SHALL HAVE A JOINT REINFORCEMENT OF AT LEAST ONE WIRE, OF SIZE W1.7, SPACED AT A MAXIMUM OF 18 INCHES ON CENTER VERTICALLY.

22. SPECIAL INSPECTION, IN ACCORDANCE WITH THE BUILDING CODE REFERENCED ABOVE, SHALL BE PROVIDED FOR ALL CLAY MASONRY WALLS.

23. WHEN AMBIENT AIR TEMPERATURE IS BELOW 40 DEGREES FAHRENHEIT IMPLEMENT COLD WEATHER PROCEDURES IN ACCORDANCE WITH ACI 530.

24. WHEN AMBIENT AIR TEMPERATURE EXCEEDS 100 DEGREES FAHRENHEIT OR EXCEEDS 90 DEGRESS FAHRENHEIT WITH A WIND VELOCITY GREATER THAN 8 MPH IMPLEMENT HOT WEATHER PROCEDUCRES IN ACCORDANCE WITH ACI 530.

ROOF PRESSURE (GROSS)					
ZONE	0-10 SQ. FT.	20 SQ. FT.	50 SQ. FT.	>100 SQ. FT.	>500 SQ. FT.
1	+16,-23	+16,-22	+16,-21	+16,-21	+16,-21
2	+16,-40	+16,-36	+16,-32	+16,-29	+16,-29
3	+16,-59	+16,-55	+16,-50	+16,-46	+16,-46

WALL PRESSURE					
ZONE	0-10 SQ. FT.	20 SQ. FT.	50 SQ. FT.	>100 SQ. FT.	>500 SQ. FT.
4	+23,-25	+22,-24	+20,-22	+19,-21	+17,-19
5	+23,-30	+22,-28	+20,-26	+19,-24	+17,-19

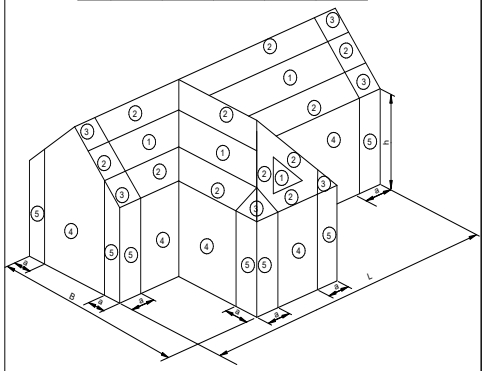

NOTES:
1. (0-10 SQ. FT.) EXAMPLE DENOTES EFFECTIVE WIND AREA.
2. + AND - SIGNS SIGNIFY PRESSURES ACTING TOWARD OR AWAY FROM THE SURFACES, RESPECTIVELY. ALL VALUES SHOWN ARE IN PSF.
3. WIND PRESSURE FOR EFFECTIVE WIND AREAS BETWEEN THE SPECIFIED RANGES MAY BE DETERMINED BY INTERPOLATION, OTHERWISE, USE THE VALUE ASSOCIATED WITH THE LOWER EFFECTIVE AREA.
4. a = WIDTH OF EDGE STRIP EQUAL TO 10% OF THE LEAST HORIZONTAL DIMENSION (L or B) or 40% OF THE ROOF HEIGHT (h), WHICHEVER IS SMALLER, BUT NOT LESS THAN 4% OF THE LEAST HORIZONTAL DIMENSION or 3ft.
5. ELEMENTS WITH TRIBUTARY AREAS GREATER THAN 700 SQ. FEET MAY BE DESIGNED USING MWFRS PROVISIONS.
6. VALUES SHOWN ARE BASED ON IBC 2012 / ASCE 7-10 WIND CALCULATIONS FOR COMPONENTS AND CLADDING AND ARE ULTIMATE VALUES (LRFD). VALUES SHOWN ARE FOR USE IN ASCE 7-10 LOAD COMBINATIONS SHOWN IN SECTION 2.32 (1.0W).
7. THE BUILDING LAYOUT SHOWN IS INTENDED TO BE SCHEMATIC, APPLY WIND PRESSURE PROVIDED SIMILARLY TO THE BUILDING(S) AT THIS PROJECT.
8. UNLESS OTHERWISE SPECIFIED, ROOF DEAD LOAD TO BE USED FOR NET UPLIFT CALCULATIONS SHALL NOT EXCEED 10 PSF. NET UPLIFT PRESSURE SHALL NOT BE LESS THAN 16 PSF.

COMPONENTS & CLADDING PRESSURES

PROFESSIONAL SEAL

Matrix Structural Engineers
TBPE Firm Registration No. F-2640

STATE OF TEXAS
JARGOL A. KHARBATTIE
66260
REGISTERED
PROFESSIONAL ENGINEER

01/14/20

LOGO/CONTACT

MATRIX
STRUCTURAL
ENGINEERS

5177 Richmond Avenue, Suite 670
Houston, TX 77046-2401
Tel: 713.664.0133
Fax: 713.664.1370
MSE - 18134

DESIGN TEAM

Architectural
Martinez Architects

Civil Engineer
Maverick Engineering

Structural
Matrix Structural Engineers

MEP
DBR

Landscaping
KDC Associates

FIRE STATION #5

CITY OF MIDLAND
2200 W GOLF COURSE RD
MIDLAND, TX 79701

PROJECT No: **MA 18017**
DATE: **01/14/2020**

No.	Date	Description
	05/21/19	100% DD
	07/30/19	ISSUE FOR PERMIT
	01/14/20	99% CD

GENERAL NOTES

S103

4.1276

SPREAD FOOTING SCHEDULE

Mark	Length	Width	Thickness	Reinforcement Bottom (Short way)	Reinforcement Bottom (Long way)	Reinforcement Top (Short way)*	Reinforcement Top (Long way)*
F3	3' - 0"	3' - 0"	1' - 6"	(4)-#5	(4)-#5		
F4	4' - 0"	4' - 0"	1' - 6"	(4)-#5	(4)-#5		
F5	5' - 0"	5' - 0"	1' - 6"	(5)-#6	(5)-#6	(5)-#5	(5)-#5
F5.5	5' - 6"	5' - 6"	1' - 6"	(5)-#6	(5)-#6		
F6	6' - 0"	6' - 0"	1' - 6"	(6)-#6	(6)-#6	(6)-#5	(6)-#5
F7	7' - 0"	7' - 0"	1' - 6"	(7)-#7	(7)-#7		
F8	8' - 0"	8' - 0"	1' - 6"	(8)-#7	(8)-#7	(8)-#5	(8)-#5

* PROVIDE TOP BARS AT BRACE COLUMNS AND MOMENT FRAMES ONLY.

FOUNDATION PLAN NOTES:

1. ALL SPREAD FOOTINGS ARE CENTERED UNDER COLUMN CENTERLINES, U.N.O.
2. SPREAD FOOTINGS OCCURRING AT INTERMEDIATE LOCATIONS SHALL BE CENTERED AT GRADE BEAM CENTERLINE.
3. SEE ARCHITECTURAL DRAWINGS FOR EXACT LOCATION OF ALL FLOOR SLOPES, DEPRESSIONS, ETC.
4. COORDINATE ALL BRICK LEDGES AND DEPTH WITH ARCHITECTURAL DRAWINGS.
5. LOCATIONS NOTED THUS: 0' - 0" INDICATES TOP OF SLAB ELEVATION. VERIFY WITH CIVIL FOR CORRESPONDING CIVIL ELEVATION.
6. SEE DETAILS 6 & 9/S305 FOR BASE PLATES.
7. SEE 8/S301 & 7/S301 FOR ADDITIONAL REBAR AT OPENINGS AND RE-ENTRANT CORNERS IN SLAB-ON-GRADE.
8. PROVIDE CONTRACTION JOINTS AND DISCONTINUOUS SLAB REINFORCING AS SHOWN IN DETAIL 5/S301 & 4/S301.
9. FIELD VERIFY ALL EXISTING CONDITIONS AND DIMENSIONS PRIOR TO FABRICATION / CONSTRUCTION.
10. T.D. INDICATES TURNDOWN, SEE 2/S305.
11. TOP OF FOOTING ELEVATION SHALL BE -3'-0" UNLESS NOTED THUS: T.O.F. = X'-X"

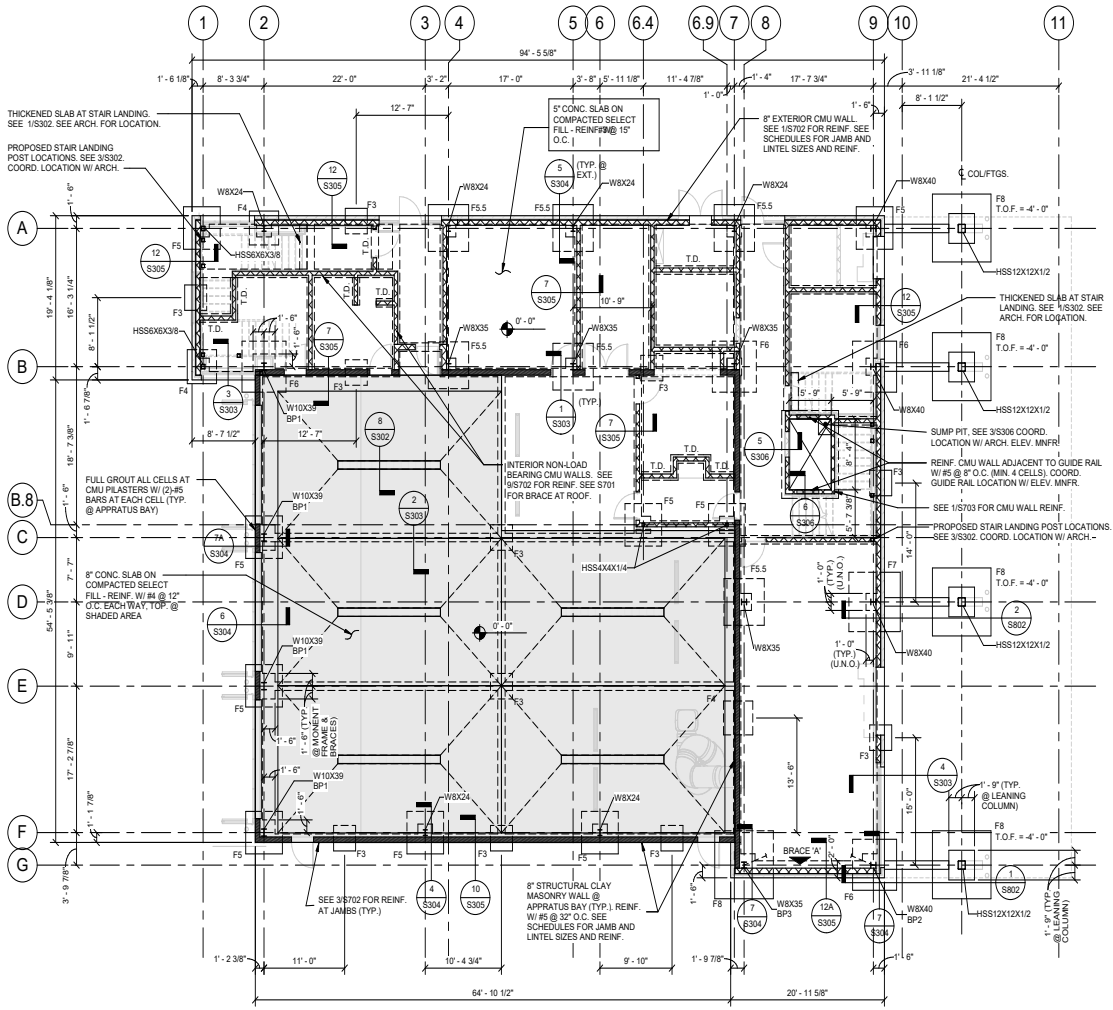

1 FOUNDATION PLAN
SCALE: 1/8" = 1'-0"

TRUE NORTH

PROJECT NORTH

PROFESSIONAL SEAL

Matrix Structural Engineers
TBPE Firm Registration No. F-2640

STATE OF TEXAS
ARNOLD A. KWAYSKITTIE
66260
REGISTERED
PROFESSIONAL ENGINEER

01/14/20

LOGO/CONTACT

MATRIX STRUCTURAL ENGINEERS

5177 Richmond Avenue, Suite 670
Houston, TX 77056-2401
Tel: 713.664.0133
Fax: 713.664.1370
MSE - 18134

DESIGN TEAM

Architectural
Martinez Architects

Civil Engineer
Maverick Engineering

Structural
Matrix Structural Engineers

MEP
DBR

Landscaping
KDC Associates

FIRE STATION #5

CITY OF MIDLAND
2200 W GOLF COURSE RD
MIDLAND, TX 79701

PROJECT No: **MA 18017**
DATE: **01/14/2020**

No.	Date	Description
	05/21/19	100% DD
	07/30/19	ISSUE FOR PERMIT
	01/14/20	99% CD

FOUNDATION PLAN

S201

4.1277

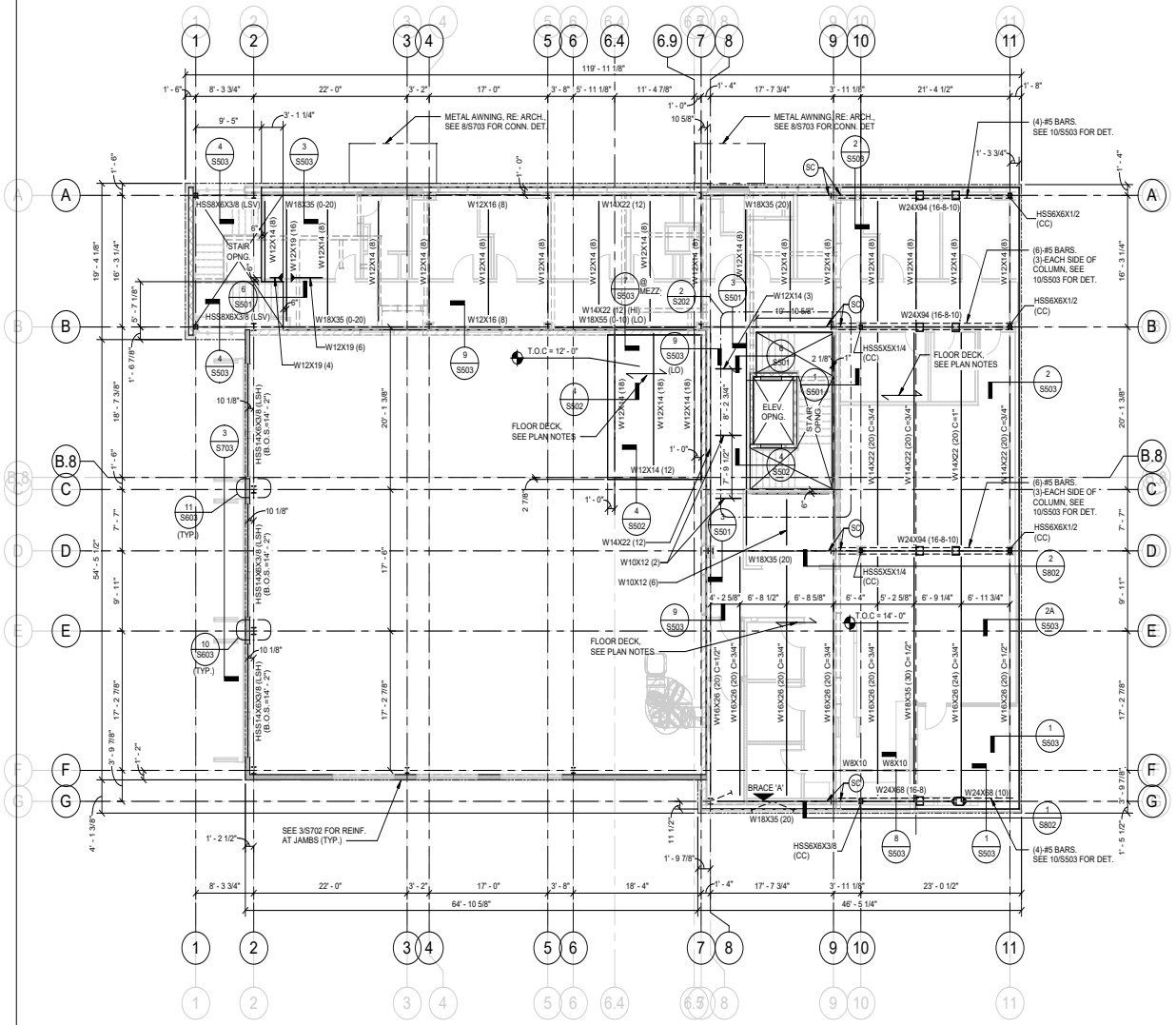

1 SECOND FLOOR FRAMING PLAN
SCALE: 1/8" = 1'-0"

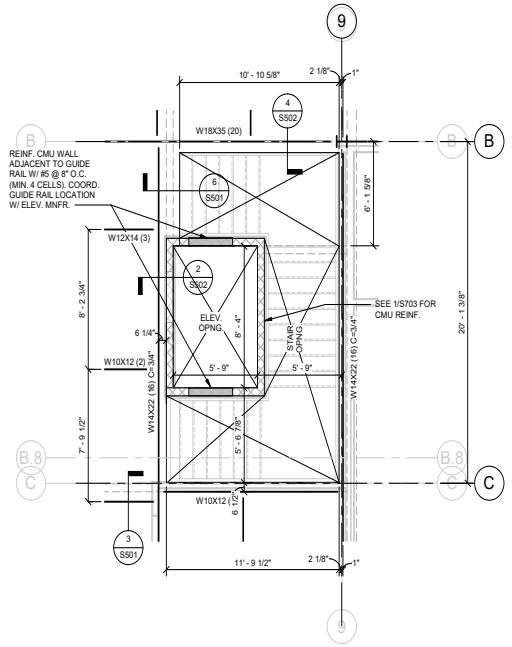

2 SECOND FLOOR FRAMING PLAN- ENLARGED AT ELEVATOR & STAIR OPENINGS
SCALE: 1/4" = 1'-0"

FLOOR PLAN NOTES:

1. TOP OF CONCRETE ELEVATION = SEE PLAN
2. LOCATIONS SHOWN THUS: (12) C=3/4" INDICATES NUMBER OF SHEAR CONNECTORS AS 12 AND UPWARD CAMBER AT MID SPAN OF BEAM AS 3/4"
3. SPACE JOISTS EQUALLY U.N.O.
4. PROVIDE END PLATES AT ALL TUBE BEAMS.
5. FIELD VERIFY ALL EXISTING CONDITIONS AND DIMENSIONS PRIOR TO FABRICATION / CONSTRUCTION.
2. SEE SHEET S201 FOR ALL COLUMN SIZES NOT SHOWN.
9. ▶ = MOMENT CONNECTION
   LSH = LONG SIDE HORIZONTAL
   LSV = LONG SIDE VERTICAL
10. CC: INDICATES CARRIED COLUMN, SEE DETAIL 7/S401.
11. ALL LOWER TUBE BEAM ELEVATIONS TO BE VERIFIED WITH ARCHITECT DRAWINGS.
12. FLOOR SHALL BE 3 1/2" NORMAL WEIGHT CONCRETE OVER THE FLUTES OF 2" x 18 GA TYPE VLI STEEL DECK AS MANUFACTURED BY VULCRAFT OR APPROVED EQUIVALENT TO TOTAL THICKNESS = 5 1/2". REINFORCE CONCRETE WITH #3 AT 18" O.C. EACH WAY. PLACE REBAR PERPENDICULAR TO BEAMS (PARALLEL TO DECK) IN THE OUTSIDE LAYER. WELD DECK USING 5/8"Ø NET EFFECTIVE PUDDLE WELDS.
   a. PERPENDICULAR BEARING : 36/4 PATTERN.
   b. PARALLEL BEARING AND EDGE : AT 12" O.C.
   c. SIDE SEAMS : SEAM WELDS AT 12" O.C.
13. (SC) INDICATES SLIP CRITICAL CONNECTION, SEE 10/S802 FOR DETAIL.

TRUE NORTH | PROJECT NORTH

PROFESSIONAL SEAL
Matrix Structural Engineers
TBPE Firm Registration No. F-2640
ARNOLD A. KWAYSKITTE
66260
LICENSED PROFESSIONAL ENGINEER
01/14/20

LOGO/CONTACT
MATRIX STRUCTURAL ENGINEERS
5177 Richmond Avenue, Suite 670
Houston, TX 77056-2401
Tel: 713.664.0133
Fax: 713.664.1370
MSE - 18134

DESIGN TEAM
Architectural
Martinez Architects
Civil Engineer
Maverick Engineering
Structural
Matrix Structural Engineers
MEP
DBR
Landscaping
KDC Associates

FIRE STATION #5
CITY OF MIDLAND
2200 W GOLF COURSE RD
MIDLAND, TX 79701

PROJECT No: MA 18017
DATE: 01/14/2020

No.	Date	Description
	05/21/19	100% DD
	07/30/19	ISSUE FOR PERMIT
	01/14/20	99% CD

SECOND FLOOR FRAMING PLAN

S202

4.1278

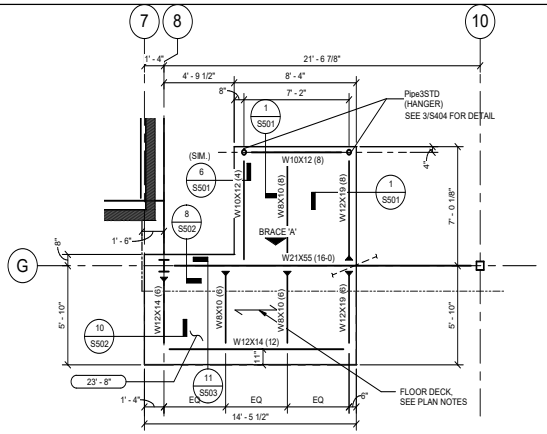

2 ENLARGED FRAMING PLAN AT RAPPELLING LEVEL

SCALE: 1/4" = 1'-0"

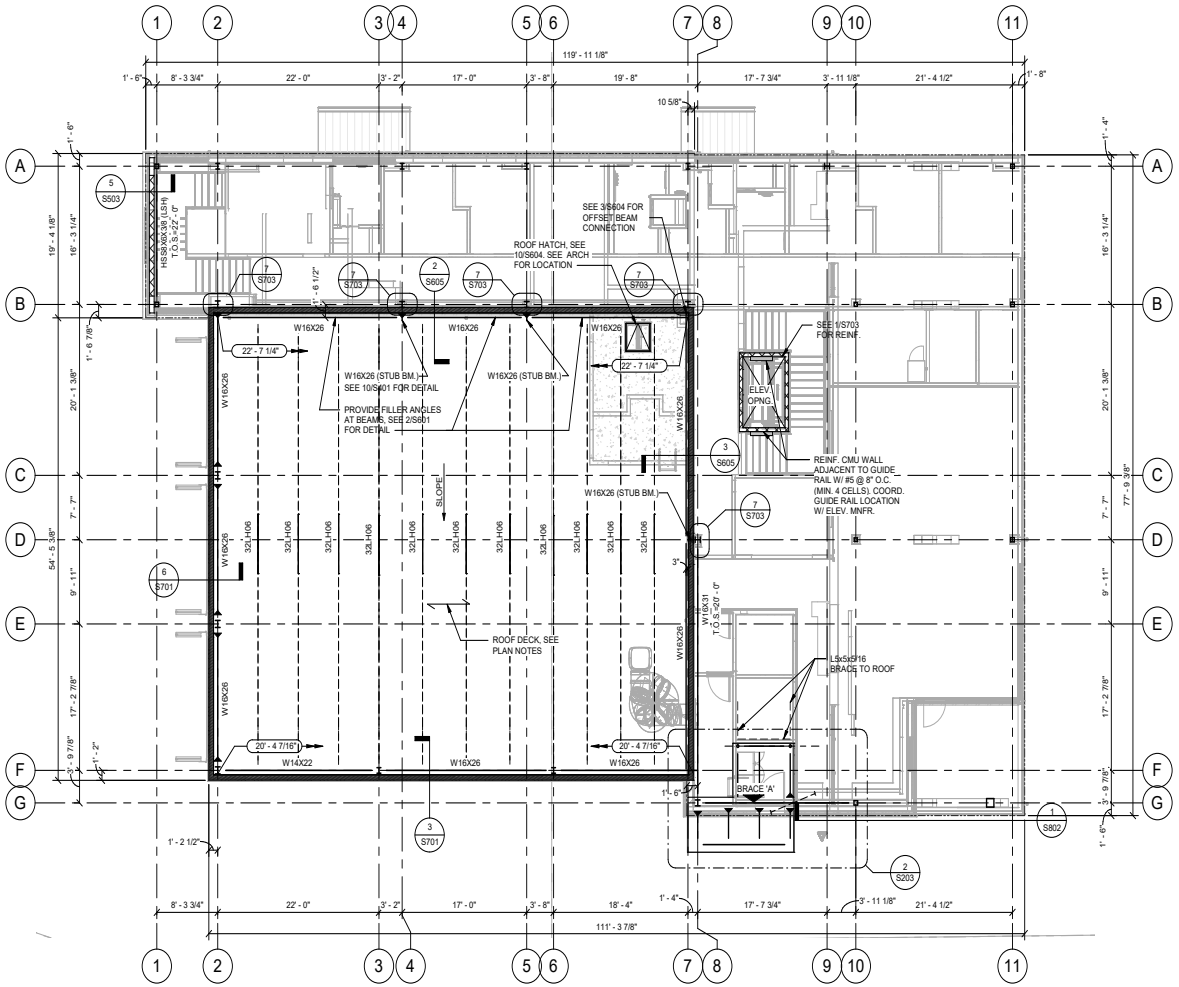

1 LOW ROOF FRAMING PLAN

SCALE: 1/8" = 1'-0"

TRUE NORTH | PROJECT NORTH

ROOF FRAMING PLAN NOTES:

1. LOCATIONS SHOWN THUS: ( ) INDICATES TOP OF STEEL (T.O.S.) ELEVATION (TOP OF STEEL = TOP OF JOIST OR BOTTOM OF DECK).
2. FIELD VERIFY ALL EXISTING CONDITIONS AND DIMENSIONS PRIOR TO FABRICATION / CONSTRUCTION.
3. JOISTS SHALL BE DESIGNED FOR ADDITIONAL LOADS RESULTING FROM RTU'S AND OTHER MECHANICAL EQUIPMENT ON THE ROOF OR SUSPENDED FROM THE ROOF STRUCTURE. SEE ARCHITECTURAL AND MEP DRAWINGS FOR LOCATIONS.
4. SPACE JOISTS EQUALLY, U.N.O.
5. PROVIDE 3/16" CLOSURE PLATES AT ALL TUBE BEAMS.
6. REFER TO ARCHITECTURAL DRAWINGS / MEP FOR LOCATIONS OF ROOF DRAINS, OVERFLOW DRAINS AND TAPERED INSULATION.

7a. ROOF SHALL BE 1.5B, 22GA DECK AS MANUFACTURED BY VULCRAFT OR EQUIVALENT. SEE ARCHITECTURAL DRAWINGS FOR INSULATION, ROOFING, ETC. WELD DECK USING 5/8"Ø NET EFFECTIVE PUDDLE WELDS:
a. PERPENDICULAR BEARING: 36/7 PATTERN.
b. PARALLEL BEARINGS AND EDGE: AT 6"O.C.
c. SIDE SEAMS: #10 TEK SCREWS AT 12"O.C.

7c. IN LIEU OF THE DECK ATTACHMENT SHOWN ABOVE, ALTERNATE DECK ATTACHMENT SHALL BE AS FOLLOWS:
a. REPLACE EACH 5/8"Ø WELD WITH ONE HILTI X-HSN 24 FASTENER FOR BASE STEEL FLANGE THICKNESS (tf) ≤ 3/8" AT THICKER BASE STEEL USE ONE HILTI X-ENP-19-L15 TYPE FASTENER.
b. REPLACE EACH SIDE SEAM #10 SCREW WITH ONE HILTI S-SLC 01 M HWH FASTENER FOR DECK THICKNESS LESS THAN OR EQUAL TO 20 GAGE.
c. ATTACHMENTS SHALL BE INSTALLED IN STRICT ACCORDANCE WITH MANUFACTURER SPECIFICATIONS.

8. SEE SHEET S801 FOR BRACE ELEVATIONS.
10. SEE SHEET S201 FOR ALL COLUMN SIZES NOT SHOWN.
11. ▶— = MOMENT CONNECTION
LSH = LONG SIDE HORIZONTAL
LSV = LONG SIDE VERTICAL
HI = HIGH
LO = LOW
12. CC : INDICATES CARRIED COLUMN, SEE DETAIL 7/S401.
13. B.F.B. INDICATES BOTTOM FLANGE BRACE, SEE 1/S602 FOR DETAIL.
14. (SC) INDICATES SLIP CRITICAL CONNECTION, SEE 12/S402 FOR DETAIL.
15. SEE 1/S603 FOR BENT BEAM DETAIL.
16. (BRKN) INDICATES BROKEN BACK BEAM. SEE 3/S602 FOR DETAIL.

FLOOR PLAN NOTES:

1. TOP OF CONCRETE ELEVATION = SEE PLAN
2. LOCATIONS SHOWN THUS: (12) C=3/4" INDICATES NUMBER OF SHEAR CONNECTORS AS 12 AND UPWARD CAMBER AT MID SPAN OF BEAM AS 3/4"
3. SPACE JOISTS EQUALLY U.N.O.
4. PROVIDE END PLATES AT ALL TUBE BEAMS.
5. FIELD VERIFY ALL EXISTING CONDITIONS AND DIMENSIONS PRIOR TO FABRICATION / CONSTRUCTION.
2. SEE SHEET S201 FOR ALL COLUMN SIZES NOT SHOWN.
9. ▶— = MOMENT CONNECTION
LSH = LONG SIDE HORIZONTAL
LSV = LONG SIDE VERTICAL
10. CC: INDICATES CARRIED COLUMN, SEE DETAIL 7/S401.
11. ALL LOWER TUBE BEAM ELEVATIONS TO BE VERIFIED WITH ARCHITECT DRAWINGS.
12. FLOOR SHALL BE 3 1/2" NORMAL WEIGHT CONCRETE OVER THE FLUTES OF 2" x 18 GA TYPE VLI STEEL DECK AS MANUFACTURED BY VULCRAFT OR APPROVED EQUIVALENT TO TOTAL THICKNESS = 5 1/2". REINFORCE CONCRETE WITH #3 AT 18" O.C. EACH WAY. PLACE REBAR PERPENDICULAR TO BEAMS (PARALLEL TO DECK) IN THE OUTSIDE LAYER. WELD DECK USING 5/8"Ø NET EFFECTIVE PUDDLE WELDS:
a. PERPENDICULAR BEARING : 36/4 PATTERN.
b. PARALLEL BEARING AND EDGE : AT 12" O.C.
c. SIDE SEAMS : SEAM WELDS AT 12" O.C.
13. (SC) INDICATES SLIP CRITICAL CONNECTION, SEE 10/S802 FOR DETAIL.

PROFESSIONAL SEAL

Matrix Structural Engineers
TBPE Firm Registration No. F-2640

STATE OF TEXAS — JARROD A. KWIATKIEWICZ — 66260 — REGISTERED PROFESSIONAL ENGINEER

01/14/20

LOGO/CONTACT

MATRIX STRUCTURAL ENGINEERS

5177 Richmond Avenue, Suite 670
Houston, TX 77056-2401
Tel: 713.664.0133
Fax: 713.664.1370
MSE - 18134

DESIGN TEAM

Architectural
Martinez Architects

Civil Engineer
Maverick Engineering

Structural
Matrix Structural Engineers

MEP
DBR

Landscaping
KDC Associates

FIRE STATION #5

CITY OF MIDLAND
2200 W GOLF COURSE RD
MIDLAND, TX 79701

PROJECT No: **MA 18017**
DATE: **01/14/2020**

No.	Date	Description
	05/21/19	100% DD
	07/30/19	ISSUE FOR PERMIT
	01/14/20	99% CD

LOW ROOF FRAMING PLAN

S203

4.1279

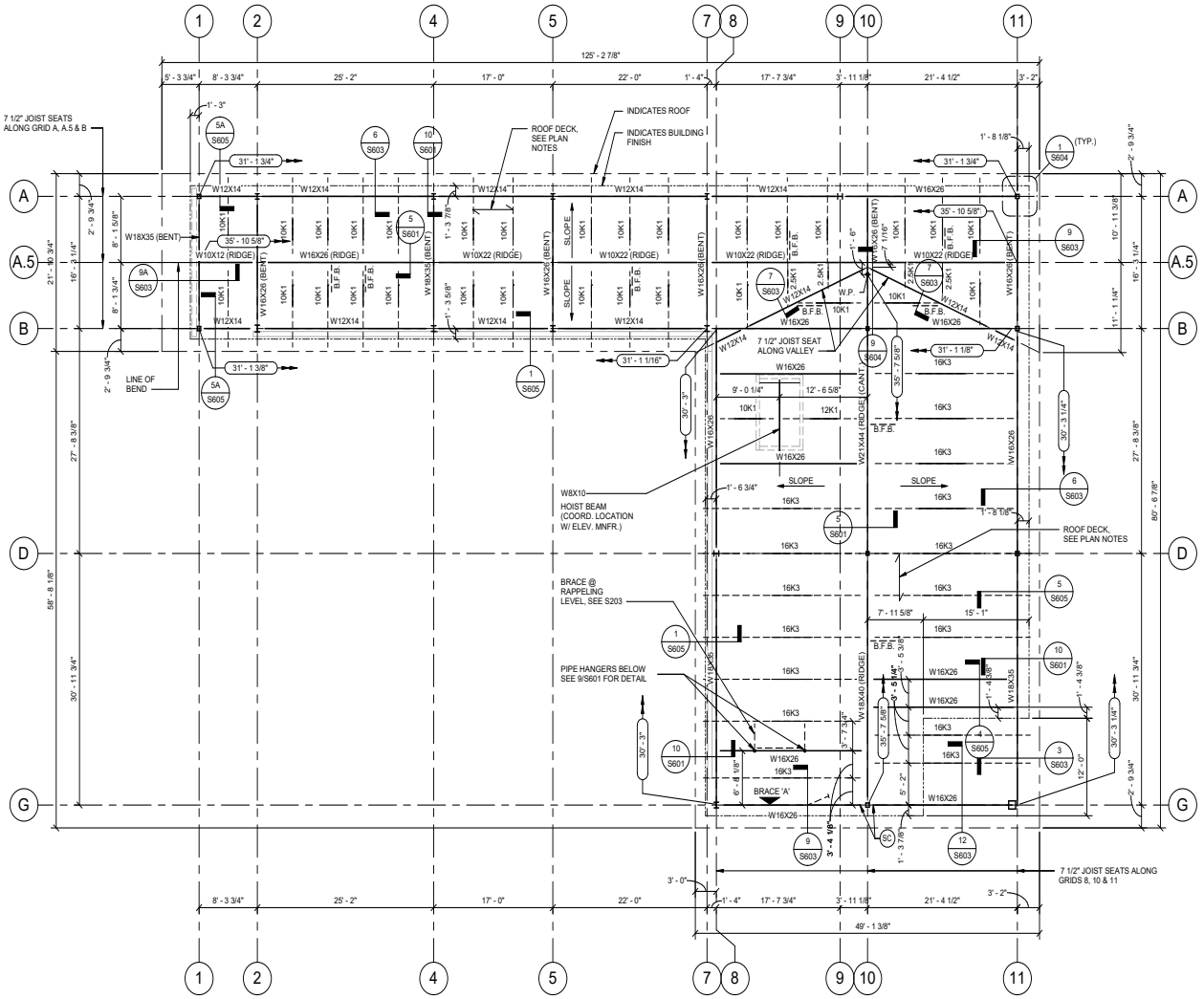

1 HIGH ROOF FRAMING PLAN
SCALE: 1/8" = 1'-0"

ROOF FRAMING PLAN NOTES:

1. LOCATIONS SHOWN THUS: ( ) INDICATES TOP OF STEEL (T.O.S.) ELEVATION (TOP OF STEEL = TOP OF JOIST OR BOTTOM OF DECK).
2. FIELD VERIFY ALL EXISTING CONDITIONS AND DIMENSIONS PRIOR TO FABRICATION / CONSTRUCTION.
3. JOISTS SHALL BE DESIGNED FOR ADDITIONAL LOADS RESULTING FROM RTU'S AND OTHER MECHANICAL EQUIPMENT ON THE ROOF OR SUSPENDED FROM THE ROOF STRUCTURE. SEE ARCHITECTURAL AND MEP DRAWINGS FOR LOCATIONS.
4. SPACE JOISTS EQUALLY, U.N.O.
5. PROVIDE 3/16" CLOSURE PLATES AT ALL TUBE BEAMS.
6. REFER TO ARCHITECTURAL DRAWINGS / MEP FOR LOCATIONS OF ROOF DRAINS, OVERFLOW DRAINS AND TAPERED INSULATION.

7a. ROOF SHALL BE 1.5B, 22GA DECK AS MANUFACTURED BY VULCRAFT OR EQUIVALENT. SEE ARCHITECTURAL DRAWINGS FOR INSULATION, ROOFING, ETC. WELD DECK USING 5/8"Ø NET EFFECTIVE PUDDLE WELDS:
a. PERPENDICULAR BEARING: 36/7 PATTERN.
b. PARALLEL BEARINGS AND EDGE: AT 6"O.C.
c. SIDE SEAMS: #10 TEK SCREWS AT 12"O.C.

7c. IN LIEU OF THE DECK ATTACHMENT SHOWN ABOVE, ALTERNATE DECK ATTACHMENT SHALL BE AS FOLLOWS:
a. REPLACE EACH 5/8"Ø WELD WITH ONE HILTI X-HSN 24 FASTENER FOR BASE STEEL FLANGE THICKNESS (tf) ≤ 3/8" AT THICKER BASE STEEL USE ONE HILTI X-ENP-19-L15 TYPE FASTENER.
b. REPLACE EACH SIDE SEAM #10 SCREW WITH ONE HILTI S-SLC 01 M HWH FASTENER FOR DECK THICKNESS LESS THAN OR EQUAL TO 20 GAGE.
c. ATTACHMENTS SHALL BE INSTALLED IN STRICT ACCORDANCE WITH MANUFACTURER SPECIFICATIONS.

8. SEE SHEET S801 FOR BRACE ELEVATIONS.
10. SEE SHEET S201 FOR ALL COLUMN SIZES NOT SHOWN.
11. ▶— = MOMENT CONNECTION
LSH = LONG SIDE HORIZONTAL
LSV = LONG SIDE VERTICAL
HI = HIGH
LO = LOW
12. CC : INDICATES CARRIED COLUMN, SEE DETAIL 7/S401.
13. B.F.B. INDICATES BOTTOM FLANGE BRACE, SEE 1/S602 FOR DETAIL.
14. (SC) INDICATES SLIP CRITICAL CONNECTION, SEE 12/S402 FOR DETAIL.
15. SEE 1/S603 FOR BENT BEAM DETAIL.
16. (BRKN) INDICATES BROKEN BACK BEAM. SEE 3/S602 FOR DETAIL.

TRUE NORTH
PROJECT NORTH

PROFESSIONAL SEAL
Matrix Structural Engineers
TBPE Firm Registration No. F-2640
STATE OF TEXAS
ARNOLD A. KWAN/BATTE
66260
LICENSED PROFESSIONAL ENGINEER
01/14/20

LOGO/CONTACT
MATRIX STRUCTURAL ENGINEERS
5177 Richmond Avenue, Suite 670
Houston, TX 77056-2401
Tel: 713.664.0133
Fax: 713.664.1370
MSE - 18134

DESIGN TEAM
Architectural
Martinez Architects
Civil Engineer
Maverick Engineering
Structural
Matrix Structural Engineers
MEP
DBR
Landscaping
KDC Associates

FIRE STATION #5
CITY OF MIDLAND
2200 W GOLF COURSE RD
MIDLAND, TX 79701

PROJECT No: MA 18017
DATE: 01/14/2020

No.	Date	Description
	05/21/19	100% DD
	07/30/19	ISSUE FOR PERMIT
	01/14/20	99% CD

HIGH ROOF FRAMING PLAN

S204

4.1280

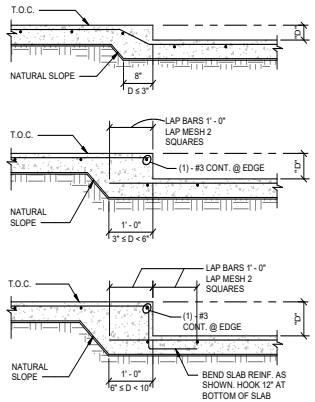

NOTES:
1. COORDINATE DEPTH & LOCATIONS OF ALL FLOOR DEPRESSIONS WITH ARCHITECTURAL DRAWINGS.
2. PROVIDE (1) - #4 x 4' - 0" TOP AT INTERIOR CORNERS OF ALL DEPRESSIONS.

TYPICAL DETAIL
AT FLOOR DEPRESSIONS

11 SCALE: N.T.S.

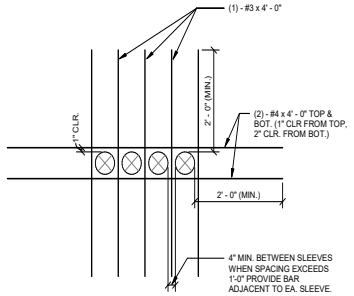

MULTIPLE OPENINGS
(PIPE SLEEVES)

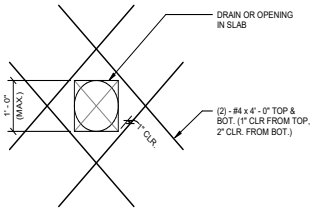

SINGLE DRAIN OR OPENING

NOTES:
1. COORDINATE OPENING SIZE AND LOCATIONS WITH ARCHITECTURAL AND MECHANICAL DRAWINGS.
2. MAXIMUM DIMENSION "A" SHALL BE 4' - 0". REFER TO PLAN OR DETAIL ON DRAWINGS FOR FRAMING OF OPENINGS GREATER THAN 4' - 0".
3. CONDUIT & PIPES OF ALUMINUM SHALL NOT BE PLACED IN CONCRETE UNLESS EFFECTIVELY COATED W/ PROTECTIVE MATERIAL TO PREVENT CHEMICAL REACTION.

TYPICAL DETAIL
ADDITIONAL REINFORCEMENT AT OPENINGS AT SLAB-ON-GRADE

8 SCALE: N.T.S.

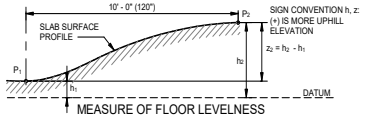

MEASURE OF FLOOR LEVELNESS

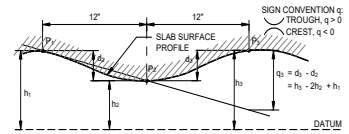

MEASURE OF FLOOR FLATNESS

NOTES:
1. F_L = LEVELNESS F-NUMBER
$F_L = \frac{12.5}{(3 \times S_Z) + z}$ WHERE $\bar{z}$ = MEAN VALUE OF ALL z FLOOR READINGS. S_z = STANDARD DEVIATION OF ALL z FLOOR READINGS.
2. F_F = LEVELNESS F-NUMBER
$F_F = \frac{4.57}{(3 \times Sq) + \bar{q}}$ WHERE $\bar{q}$ = MEAN VALUE OF ALL z FLOOR READINGS. S_q = STANDARD DEVIATION OF ALL q FLOOR READINGS
3. F_L AND F_F SHALL BE STATISTICALLY DETERMINED ACCORDING TO ASTM E 1155 "STANDARD TEST METHOD FOR DETERMINING FLOOR FLATNESS AND LEVELNESS USING THE F-NUMBER SYSTEM.".
4. REFER TO CONCRETE SPECIFICATIONS FOR REQUIRED F_F AND F_L VALUES.

TYPICAL DETAIL
SLAB SURFACE TOLERANCE

6 SCALE: N.T.S.

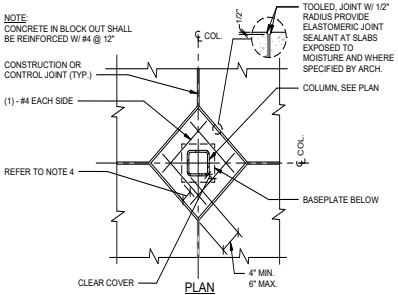

NOTES:
1. GENERAL CONTRACTOR TO COORDINATE REQUIRED SIZE OF BLOCK OUT FOR COLUMNS. SUBMIT THE DESIRED BLOCK OUT SIZE TO ARCHITECT FOR APPROVAL.
2. PROVIDE 3" MINIMUM CONCRETE COVER ALL AROUND COLUMN.
3. BLOCKOUT SHALL BE SIZED TO PROVIDE 3" MINIMUM CONCRETE COVER ALL AROUND COLUMN AND BASE PLATE.
4. GENERAL CONTRACTOR TO INCREASE COLUMN BLOCK-OUT DIMENSIONS AS REQUIRED TO ACCOMMODATE GUSSET PLATES AT BRACE FRAMES.

TYPICAL DETAIL
BLOCK-OUT AROUND COLUMN (SLAB-ON-GRADE)

3 SCALE: N.T.S.

DOWEL SCHEDULE			
SLAB DEPTH (IN.)	DOWEL DIAMETER (IN.)	TOTAL DOWEL LENGTH (IN.)	DOWEL SPACING CENTER TO CENTER (IN.)
5-6	3/4	16	12
7-8	1	18	12
9-11	1 1/4	18	12

CONTRACTION JOINT SPACING	
SLAB THK. (IN.)	JOINT SPACING (FT)
4	11
5	13
6	14
7	16
8	17
≥9	18

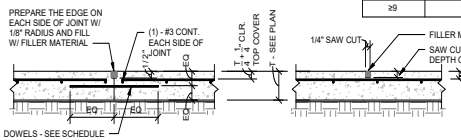

CONSTRUCTION JOINT

CONTRACTION JOINT

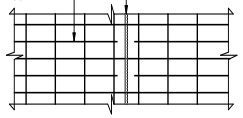

CONTRACTION JOINT (PLAN VIEW)

CONSTRUCTION JOINT NOTES:
1. SLAB REINFORCEMENT SHALL BE CHAIRED BY SOIL SUPPORTED SLAB BOLSTERS.
2. BREAK BOND BETWEEN NEW AND PREVIOUSLY PLACED SLAB BY SPRAYING OR PAINTING EXPOSED SIDE WITH FORM OIL.
3. SUBGRADE SHALL BE FREE OF STANDING WATER AT THE TIME OF CONCRETE PLACEMENT.
4. ALL DOWELS IN THIS DETAIL SHALL BE SMOOTH BAR DOWELS.

JOINT SPACING NOTE:
1. PROVIDE CONTRACTION AND/OR CONSTRUCTION JOINTS AT EVERY COLUMN CENTERLINE AND AT A MAXIMUM SPACING AS SCHEDULED. NOT TO EXCEED 18 FEET, U.N.O. ASPECT RATIOS OF SLAB PANELS ENCLOSED BY CONTROL JOINTS SHALL NOT EXCEED 1.5 TO 1.

SAW CONTRACTION JOINT NOTES:
1. MAKE SAW CUT AS SOON AS SLAB IS ABLE TO SUPPORT WEIGHT OF WORKERS AND SAWING EQUIPMENT WITHOUT DAMAGE TO FINISH SURFACE OF SLAB.
2. ALL JOINTS SHALL BE CONTINUOUS. DO NOT OFFSET OR STAGGER JOINTS.
3. CLEAN JOINT PRIOR TO FILLING THE JOINT.

JOINT FILLER MATERIAL NOTES:
1. FILLER MATERIAL USED SHALL BE EPOXY RESINS WITH A MINIMUM SHORE "A" HARDNESS OF 80 AND SHALL CONFORM TO ASTM D2240. JOINT FILLER SHALL BE APPROVED BY ENGINEER PRIOR TO APPLICATION. INSTALL JOINT FILLER PER MANUFACTURER'S SPECIFICATIONS.
2. WHERE POSSIBLE, FILLER MATERIAL SHALL BE APPLIED WHEN BUILDING IS UNDER PERMANENT TEMPERATURE CONTROL. THIS SHALL BE EITHER AT THE END OF CONSTRUCTION OF THE COMPLETE BUILDING SHELL, OR A MINIMUM OF 90 DAYS AFTER SLAB CONSTRUCTION.
3. ALL EXPOSED SLAB JOINTS SHALL BE FILLED WITH FILLER MATERIAL.

TYPICAL DETAIL
CONSTRUCTION AND CONTRACTION JOINTS SLAB-ON-GRADE

5 SCALE: N.T.S.

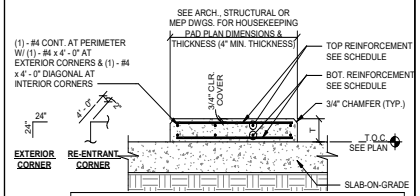

HOUSEKEEPING PAD REINF. SCHEDULE		
PAD THICKNESS	TOP REINFORCEMENT	BOTTOM REINF.
T ≤ 4"	WWR 4x4-W2.9xW2.9 OR #3 @12" E.W.	NONE
4" < T ≤ 6"	WWR 4x4-W4xW4 OR #4 @18" E.W.	NONE
6" < T ≤ 8"	WWR 4x4-W6xW6 OR #4 @12" E.W.	NONE
8" < T ≤ 12"	#4 @ 18" E.W.	#4 @ 18" E.W.
12" < T ≤ 16"	#4 @ 12" E.W.	#4 @ 12" E.W.

NOTES:
1. GENERAL CONTRACTOR TO COORDINATE WITH MECHANICAL DRAWINGS AND SPECIFICATIONS TO DETERMINE REQUIREMENTS FOR HOUSEKEEPING PADS OVER SLAB-ON-GRADE AND PROVIDE WHERE REQUIRED WHETHER SHOWN ON STRUCTURAL DRAWINGS OR NOT. COORDINATE DIMENSIONS AND OTHER SPECIAL REQUIREMENTS WITH EQUIPMENT MANUFACTURERS AS REQUIRED.
2. PAD SHALL NOT BE POURED UNTIL AFTER SLAB HAS REACHED ITS SPECIFIED 28 DAYS STRENGTH.
3. CONCRETE FOR HOUSEKEEPING PAD SHALL BE NORMAL WEIGHT CONCRETE WITH f'c = 3,000 PSI.

TYPICAL DETAIL
CONCRETE ISLAND OR HOUSEKEEPING PAD SLAB-ON-GRADE

10 SCALE: N.T.S.

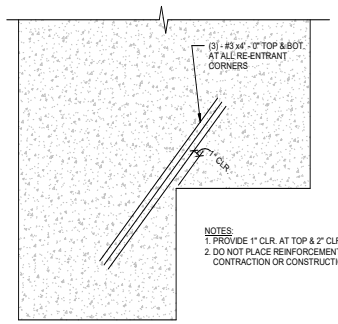

NOTES:
1. PROVIDE 1" CLR. AT TOP & 2" CLR. AT BOT.
2. DO NOT PLACE REINFORCEMENT ACROSS CONTRACTION OR CONSTRUCTION JOINTS.

SCHEMATIC SLAB-ON-GRADE

TYPICAL DETAIL
RE-ENTRANT CORNER BARS AT SLAB-ON-GRADE

7 SCALE: N.T.S.

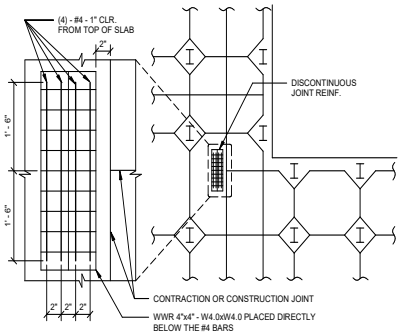

NOTE:
DISCONTINUOUS CONTRACTION OR CONSTRUCTION JOINTS SHOULD BE AVOIDED WHERE POSSIBLE.

TYPICAL DETAIL
ADDITIONAL REINFORCEMENT AT DISCONTINUOUS JOINT IN SLAB-ON-GRADE

4 SCALE: N.T.S.

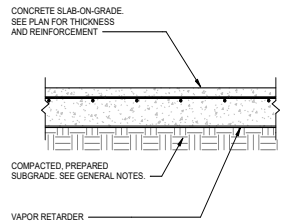

NOTE:
1. UNLESS SPECIFIED ELSEWHERE, VAPOR RETARDER SHALL BE A MINIMUM OF 15 MILS THICK (UNLESS THICKER SPECIFIED IN SPECS/ARCH. DRAWINGS) MEETING OR EXCEEDING ASTM E-1745, CLASS C, AND HAVE NO MORE THAN 0.01 PERMS WHEN TESTED IN ACCORDANCE WITH ASTM E-96.

TYPICAL DETAIL
SLAB-ON-GRADE CONSTRUCTION SUBGRADE PREPARATION

1 SCALE: N.T.S.

PROFESSIONAL SEAL
Matrix Structural Engineers
TBPE Firm Registration No. F-2640
ARNOLD A. KWAYSBATTEE
66260
01/14/20

LOGO/CONTACT
MATRIX STRUCTURAL ENGINEERS
5177 Richmond Avenue, Suite 670
Houston, TX 77046-2401
Tel: 713.664.0133
Fax: 713.664.1370
MSE - 18134

DESIGN TEAM
Architectural
Martinez Architects
Civil Engineer
Maverick Engineering
Structural
Matrix Structural Engineers
MEP
DBR
Landscaping
KDC Associates

FIRE STATION #5
CITY OF MIDLAND
2200 W GOLF COURSE RD
MIDLAND, TX 79701

PROJECT No: **MA 18017**
DATE: **01/14/2020**

No.	Date	Description
	05/21/19	100% DD
	07/30/19	ISSUE FOR PERMIT
	01/14/20	99% CD

FOUNDATION DETAILS

S301

4.1281

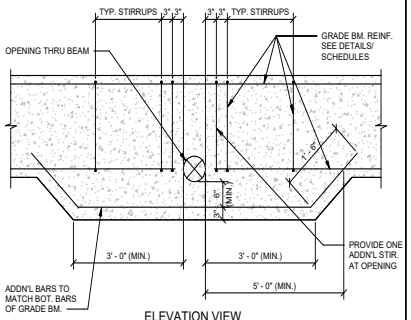

ELEVATION VIEW

TYPICAL DETAIL
OPENING THRU GRADE BEAM THAT
CONFLICTS WITH BOTTOM REINFORCEMENT

12 SCALE: N.T.S.

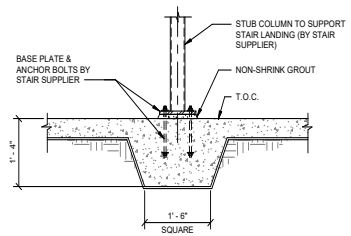

TYPICAL DETAIL
THICKENED SLAB BELOW
COLUMNS AT STAIR LANDING

3 SCALE: 3/4" = 1'-0"

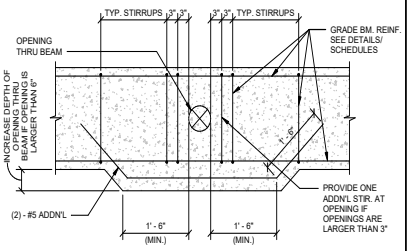

ELEVATION OF GRADE BEAM

TYPICAL DETAIL
OPENING THRU GRADE BEAM

11 SCALE: N.T.S.

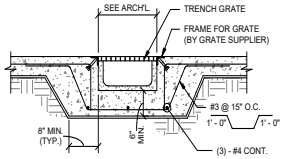

NOTES:
1. SEE ARCHITECTURAL DRAWINGS FOR ACTUAL LOCATION AND TRENCH SIZE.

TYPICAL DETAIL
TRENCH DRAIN

8 SCALE: N.T.S.

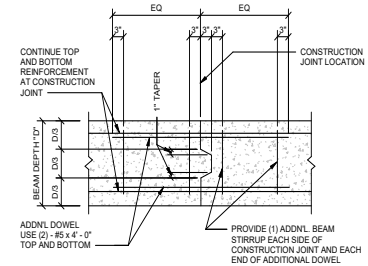

NOTES:
1. GENERAL CONTRACTOR SHALL SUBMIT DESIRED CONSTRUCTION JOINT LAYOUT AS A SHOP DRAWING FOR APPROVAL A MINIMUM OF TWO WEEKS PRIOR TO POUR.
2. CONSTRUCTION JOINT LOCATIONS SHALL BE COORDINATED WITH REINFORCING STEEL SUPPLIER AND ERECTOR.
3. JOINT LOCATIONS SHALL BE WITHIN TWO FEET EITHER SIDE OF BEAM MIDSPAN.
4. FOR JOINT LOCATIONS OTHER THAN WITHIN TWO FEET EITHER SIDE OF BEAM MIDSPAN, CONTRACTOR SHALL COORDINATE REQUIRED ADDITIONAL REINFORCEMENT WITH THE ENGINEER ON THE SHOP DRAWINGS.

TYPICAL DETAIL
GRADE BEAM CONSTRUCTION JOINT

2 SCALE: N.T.S.

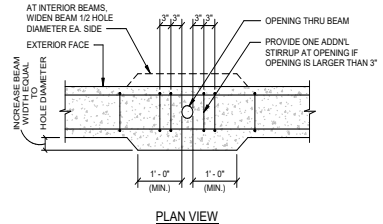

PLAN VIEW

TYPICAL DETAIL
VERTICAL HOLE THRU GRADE BEAM
LARGER THAN 3" DIAMETER

10 SCALE: N.T.S.

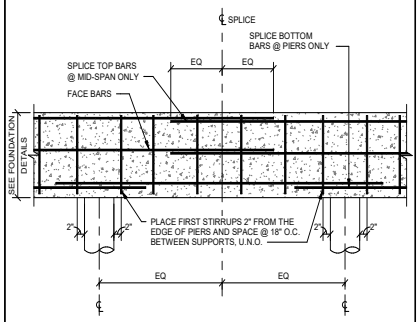

NOTES:
1. SLAB STEEL NOT SHOWN FOR CLARITY.
2. SEE TYPICAL DETAIL "TENSION DEVELOPMENT AND SPLICE LENGTH" FOR SPLICE DIMENSION.

TYPICAL DETAIL
BEAM REINFORCING SPLICE DETAIL

7 SCALE: N.T.S.

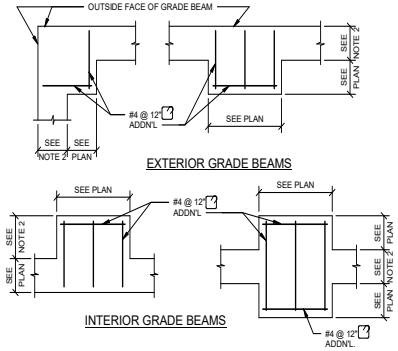

NOTES:
1. PLAN VIEWS FOR TYPICAL WIDENED GRADE BEAMS ARE SHOWN. FOR SIMILAR CONDITION NOT SHOWN, PROVIDE #4 ADDN'L. @ 12" O.C. MAX. IN WIDENED SECTION.
2. SEE DETAIL SHEETS FOR GRADE BEAM WIDTH.

TYPICAL DETAIL
ADDITIONAL BARS AT WIDENED GRADE BEAM
(PLAN VIEW)

4 SCALE: N.T.S.

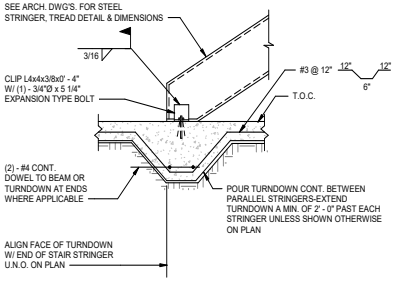

NOTES:
1. GENERAL CONTRACTOR IS RESPONSIBLE FOR THE COORDINATION OF STAIR STRINGER LOCATIONS WITH ARCHITECTURAL DRAWINGS & PROVIDE TURNDOWNS WHERE REQUIRED WHETHER SHOWN ON STRUCTURAL DRAWINGS OR NOT.
2. CLIP ANGLE TO BE HIDDEN BENEATH FIRST TREAD. WHERE OPEN RISERS ARE USED, COORDINATE THE LOCATION WITH THE ARCHITECT.

TYPICAL DETAIL
TURNDOWN AT STEEL STAIR
SLAB-ON-GRADE

1 SCALE: N.T.S.

4.1282

PROFESSIONAL SEAL

Matrix Structural Engineers
TBPE Firm Registration No. F-2640

01/14/20

LOGO/CONTACT

MATRIX STRUCTURAL ENGINEERS

5177 Richmond Avenue, Suite 670
Houston, TX 77046-2401
Tel: 713.664.0133
Fax: 713.664.1370
MSE - 18134

DESIGN TEAM

Architectural
Martinez Architects

Civil Engineer
Maverick Engineering

Structural
Matrix Structural Engineers

MEP
DBR

Landscaping
KDC Associates

FIRE STATION #5
CITY OF MIDLAND
2200 W GOLF COURSE RD
MIDLAND, TX 79701

PROJECT No: **MA 18017**
DATE: **01/14/2020**

No.	Date	Description
	05/21/19	100% DD
	07/30/19	ISSUE FOR PERMIT
	01/14/20	99% CD

FOUNDATION DETAILS

S302

TENSION DEVELOPMENT LENGTHS AND TENSION LAP SPLICE LENGTHS
GRADE 60 (UNCOATED) REINFORCEMENT
(NORMAL WEIGHT CONCRETE)

BAR SIZE	F'c = 3000		F'c = 4000		F'c = 5000		F'c = 6000		F'c = 7000		F'c = 8000		F'c = 9000		F'c = 10000	
	CLASS A 1.0Ld	CLASS B 1.3Ld	CLASS A 1.0Ld	CLASS B 1.3Ld	CLASS A 1.0Ld	CLASS B 1.3Ld	CLASS A 1.0Ld	CLASS B 1.3Ld	CLASS A 1.0Ld	CLASS B 1.3Ld	CLASS A 1.0Ld	CLASS B 1.3Ld	CLASS A 1.0Ld	CLASS B 1.3Ld	CLASS A 1.0Ld	CLASS B 1.3Ld
#3	17	22	15	19	13	17	12	16	12	16	12	16	12	16	12	16
#4	22	29	19	25	17	23	16	21	15	19	14	18	13	17	12	16
#5	28	36	24	31	22	28	20	26	18	24	17	22	16	21	15	20
#6	33	43	29	37	26	34	24	31	22	28	21	27	19	25	18	24
#7	48	63	42	54	38	49	34	45	32	41	30	39	28	36	27	35
#8	55	72	48	62	43	56	39	51	36	47	34	44	32	42	30	39
#9	62	81	54	70	48	63	44	57	41	53	38	50	36	47	34	44
#10	70	91	61	79	54	71	50	64	46	60	43	56	41	53	39	50
#11	78	101	67	87	60	78	55	71	51	66	48	62	45	58	43	55

NOTES:
1. ALL LENGTHS SHOWN IN THE TABLE ARE IN INCHES.
2. Ld = TENSION DEVELOPMENT LENGTH.
3. THE ABOVE TABLE IS VALID FOR
   a. BEAMS AND COLUMNS WHERE CONCRETE COVER > = db, c/c BAR SPACING > = 2db AND WITH STIRRUPS OR TIES THROUGHOUT Ld NOT LESS THAN THE CODE MINIMUM.
   b. OTHER ELEMENTS SUCH AS SLABS, WALLS, ETC. WHERE CONCRETE COVER > = db, c/c BAR SPACING > = 3db.
4. FOR TOP BARS, MULTIPLY THE SPLICE LENGTHS BY 1.30. TOP BARS REQUIRE A MINIMUM OF 12" OF FRESH CONCRETE BELOW BAR.
5. WHEN BARS OF A DIFFERENT SIZE ARE LAP SPLICED IN TENSION, SPLICE LENGTH SHALL BE THE LARGER OF Ld OF THE LARGER BAR AND COMPRESSION LAP SPLICE LENGTH OF SMALLER BAR.
6. BARS SPLICED BY NON-CONTACT LAP SPLICES SHALL NOT BE SPACED TRANSVERSELY FARTHER APART THAN THE SMALLER OF ONE-FIFTH THE REQUIRED LAP SPLICE LENGTH AND 6 IN.

TYPICAL DETAIL
TENSION DEVELOPMENT AND SPLICE LENGTHS
(NORMAL WEIGHT CONCRETE)

9 SCALE: N.T.S.

DEVELOPMENT LENGTHS OF STANDARD HOOKS IN TENSION
GRADE 60 (UNCOATED) REINFORCEMENT
(NORMAL WEIGHT CONCRETE)

BAR SIZE	F'c = 3000		F'c = 4000		F'c = 5000		F'c = 6000		F'c = 7000		F'c = 8000		F'c = 9000		F'c = 10000	
	Ldh	0.7Ldh	Ldh	0.7Ldh	Ldh	0.7Ldh	Ldh	0.7Ldh	Ldh	0.7Ldh	Ldh	0.7Ldh	Ldh	0.7Ldh	Ldh	0.7Ldh
#3	9	6	8	6	7	6	6	6	6	6	6	6	6	6	6	6
#4	11	8	10	7	9	6	8	6	8	6	7	6	7	6	6	6
#5	14	10	12	9	11	8	10	7	9	7	9	6	8	6	8	6
#6	17	12	15	10	13	9	12	9	11	8	11	8	10	7	9	7
#7	20	14	17	12	15	11	14	10	13	9	12	9	12	8	11	8
#8	22	16	19	14	17	12	16	11	15	11	14	10	13	9	12	9
#9	25	18	22	15	20	14	18	13	17	12	16	11	15	10	14	10
#10	28	20	25	17	22	16	20	14	19	13	18	12	17	12	16	11
#11	31	22	27	19	24	17	22	16	21	15	19	14	18	13	17	12

90° HOOKS

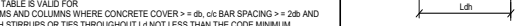

180° HOOKS

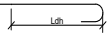

NOTES:
1. ALL LENGTHS SHOWN IN THE TABLE ARE IN INCHES.
2. Lhb = TENSION DEVELOPMENT LENGTH.
3. Ldh = Lhb, UNLESS CONDITIONS OF ITEM 4 ARE SATISFIED
4. Ldh = 0.7 Lhb, WHEN SIDE COVER NORMAL TO PLANE OF HOOK IS NOT LESS THAN 2 1/2 INCHES AND FOR 90° HOOK, COVER ON BAR EXTENSION BEYOND HOOK SHALL NOT BE LESS THAN 2 INCHES.
5. HOOKS SHALL NOT BE CONSIDERED EFFECTIVE IN DEVELOPING BARS IN COMPRESSION.

TYPICAL DETAIL
DEVELOPMENT LENGTH OF STANDARD HOOKS IN TENSION
(NORMAL WEIGHT CONCRETE)

6 SCALE: N.T.S.

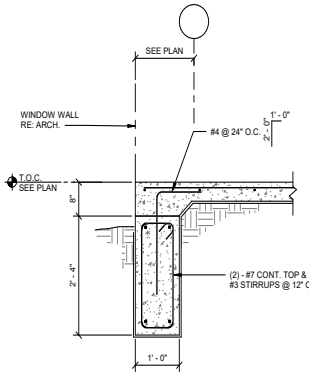

TYPICAL DETAIL
EXTERIOR GRADE BEAM
AT WINDOW WALL

3 SCALE: 3/4" = 1'-0"

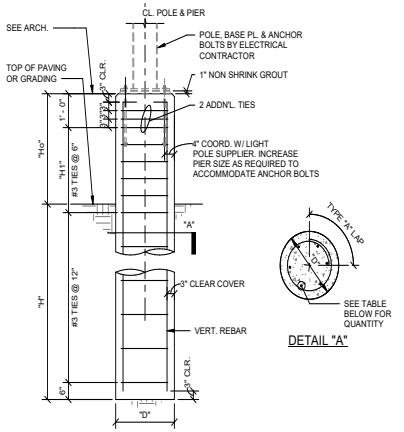

DETAIL "A"

POLE MARK	NOM. POLE HEIGHT	ASSUMED EPA (sf)	"H" DEPTH OF PIER	"Ho" ABOVE GRADE	"H1"	"D" DIAMETER OF PIER	VERTICAL REINF	TIES	REMARKS
LP1	15' - 0"	5.0	5' - 0"	RE: ARCH.	1' - 6"	24"	6 - #6	#3 @ 12"	TYPICAL PARKING
LP2	25' - 0"	10.0	8' - 0"	RE: ARCH.	1' - 6"	24"	6 - #6	#3 @ 12"	TYPICAL PARKING
LP3	35' - 0"	10.0	10' - 0"	RE: ARCH.	1' - 6"	24"	6 - #7	#3 @ 12"	

NOTES:
1. WIND LOAD CRITERIA IS PER IBC 2012. Vult = 140 MPH.
2. CONCRETE COMPRESSIVE STRENGTH, F'C = 3,000 PSI (NWC), WITH A MAX WATER/CEMENT RATIO OF 0.54.
3. STEEL REINFORCEMENT SHALL BE ASTM A615, GR. 60.
4. REFER TO ARCH DRAWINGS/CIVIL DRAWINGS FOR LOCATIONS OF LIGHT POLES.
5. REFER TO ELECTRICAL DRAWINGS FOR ADDITIONAL INFORMATION (AND SPECIFICATIONS FOR LIGHT STANDARDS).
6. VERIFY PROJECTION OF CONCRETE ABOVE GROUND WITH ARCHITECT.
7. EPA INDICATES MAXIMUM EXPOSED PROJECTED AREA AT THE TOP OF THE POLE IN ANY DIRECTION.
8. FOR A STATED POLE HEIGHT SHOWN ON THE TABLE, THE DEPTH OF PIER IS DEEMED ADEQUATE IF EPA IS LESS THAN SHOWN ON TABLE ABOVE.

TYPICAL DETAIL
LIGHT POLE FOUNDATION

10 SCALE: N.T.S.

MIN. 'L' DEPTH			
MAX. POLE HEIGHT (ft.)	MAX. FLAG AREA ft²	'L1'	'L2'
20	24	4' - 0"	3' - 0"
25	30	5' - 0"	4' - 0"
30	60	5' - 6"	4' - 6"
35	60	6' - 0"	4' - 6"
45	96	7' - 6"	5' - 6"
50	150	8' - 6"	6' - 6"

NOTES:
1. CONCRETE SHALL HAVE A 28 DAY COMPRESSIVE STRENGTH OF 3000 PSI WITH A MAXIMUM AGGREGATE SIZE OF 1 1/2" AND A MAXIMUM WATER / CEMENT RATIO OF 0.54.
2. ALL REINFORCEMENT SHALL CONFORM TO ASTM A615, GR. 60.
3. ASSUMPTIONS FOR FOUNDATION DESIGN INCLUDE A 5"-12", 20-50 FT. POLE W/ FIXTURES AND A MAXIMUM FLAG AREA OF 24-150 SQ. FT.
4. SEE MNFR. DRAWINGS AND SPECIFICATIONS FOR ADDITIONAL INFORMATION AND REQUIREMENTS.
5. WIND LOAD CRITERIA IS PER IBC 2012, Vult = 140 MPH.
6. FOR A STATED POLE HEIGHT SHOWN ON THE TABLE, THE DEPTH OF PIER IS DEEMED ADEQUATE IF EPA IS LESS THAN SHOWN ON TABLE ABOVE.
7. USE DEPTH 'L2' WHERE FLAG POLE IS CONFINED BY PAVING, AT BASE, OTHERWISE USE L1

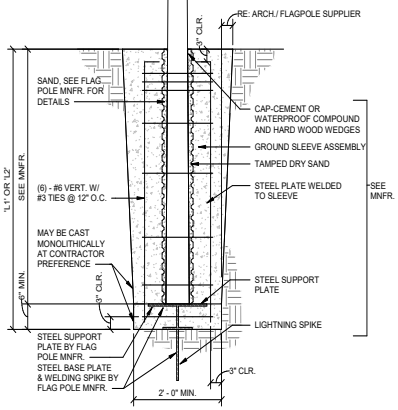

TYPICAL DETAIL
FLAG POLE FOUNDATION

7 SCALE: N.T.S.

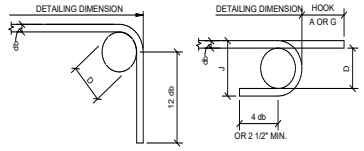

90 DEG HOOK 180 DEG HOOK

RECOMMENDED END HOOKS, ALL GRADES

BAR SIZE	FINISHED BEND DIAMETER D, (IN.)	180 DEG HOOKS		90 DEG HOOKS
		A OR G, (IN.)	J, (IN.)	A OR G, (IN.)
#3	2 1/4	5	3	6
#4	3	6	4	8
#5	3 3/4	7	5	10
#6	4 1/2	8	6	12
#7	5 1/4	10	7	14
#8	6	11	8	16
#9	9 1/2	15	11 3/4	19
#10	10 3/4	17	13 1/4	22
#11	12	19	14 3/4	24
#14	18 1/4	27	21 3/4	31
#18	24	36	28 1/2	41

D = INSIDE DIAMETER OF BEND

END HOOK TYPES

5 SCALE: N.T.S.

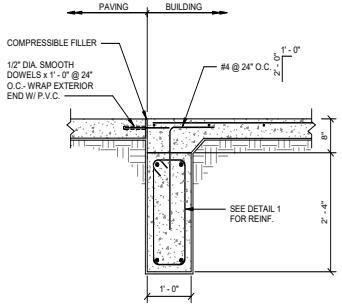

TYPICAL DETAIL
EXTERIOR GRADE BEAM
AT DOORS/FLATWORK

4 SCALE: 3/4" = 1'-0"

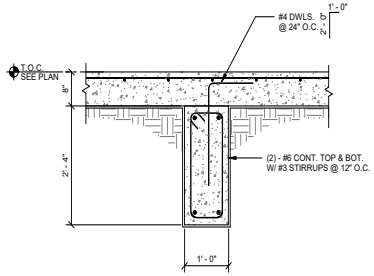

TYPICAL DETAIL
INTERIOR GRADE BEAM

2 SCALE: 3/4" = 1'-0"

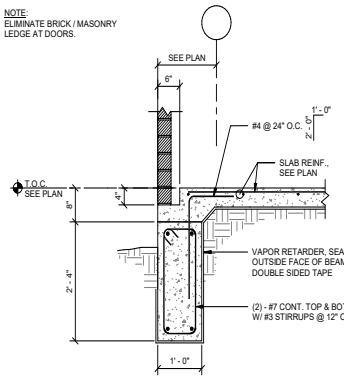

TYPICAL DETAIL
EXTERIOR GRADE BEAM

1 SCALE: 3/4" = 1'-0"

PROFESSIONAL SEAL

Matrix Structural Engineers
TBPE Firm Registration No. F-2640

01/14/20

LOGO/CONTACT

MATRIX STRUCTURAL ENGINEERS

5177 Richmond Avenue, Suite 670
Houston, TX 77056-2401
Tel: 713.664.0133
Fax: 713.664.1370
MSE - 18134

DESIGN TEAM

Architectural
Martinez Architects

Civil Engineer
Maverick Engineering

Structural
Matrix Structural Engineers

MEP
DBR

Landscaping
KDC Associates

FIRE STATION #5
CITY OF MIDLAND
2200 W GOLF COURSE RD
MIDLAND, TX 79701

PROJECT No: **MA 18017**
DATE: **01/14/2020**

No.	Date	Description
	05/21/19	100% DD
	07/30/19	ISSUE FOR PERMIT
	01/14/20	99% CD

FOUNDATION DETAILS

S303

4.1283

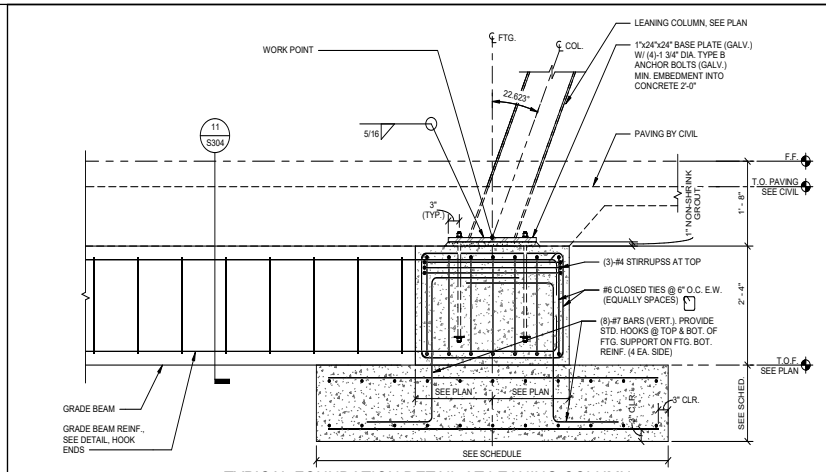

TYPICAL FOUNDATION DETAIL AT LEANING COLUMN

12 SCALE: 3/4" = 1'-0"

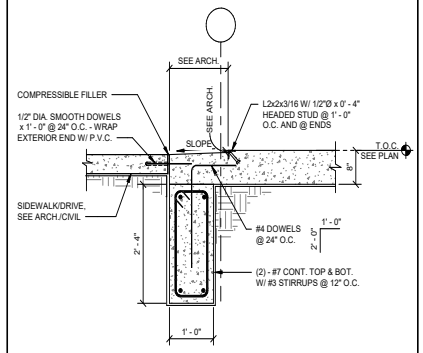

SLAB EDGE AT OVERHEAD DOORS

6 SCALE: 3/4" = 1'-0"

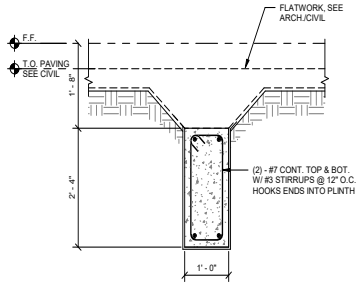

TYPICAL DETAIL
EXTERIOR GRADE BEAM
AT FLATWORK

11 SCALE: 3/4" = 1'-0"

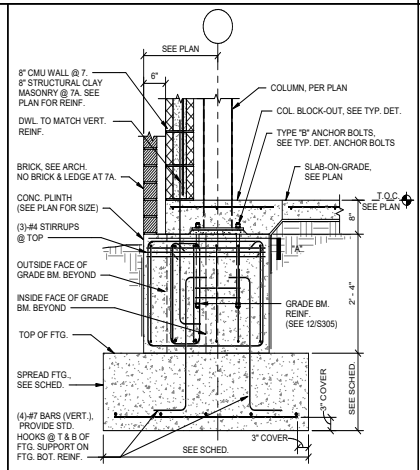

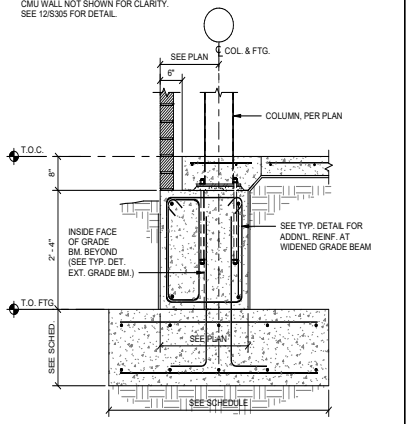

TYPICAL DETAIL
EXTERIOR GRADE BEAM AT COLUMN

5 SCALE: 3/4" = 1'-0"

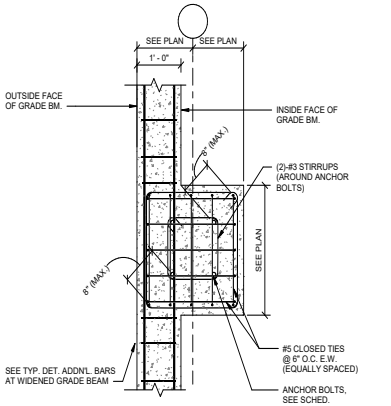

SECTION "A"

7A

TYPICAL DETAIL
EXTERIOR GRADE BEAM AT BRACE
COLUMN/MOMENT FRAME

7 SCALE: 3/4" = 1'-0"

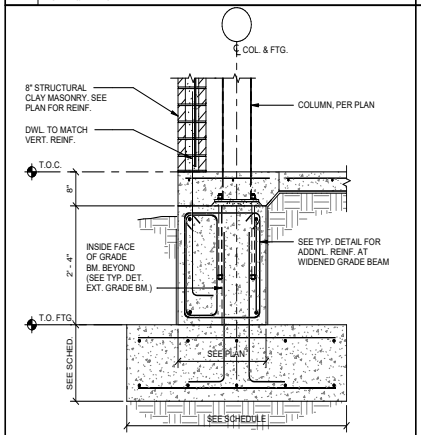

TYPICAL DETAIL
EXTERIOR GRADE BEAM AT COLUMN

4 SCALE: 3/4" = 1'-0"

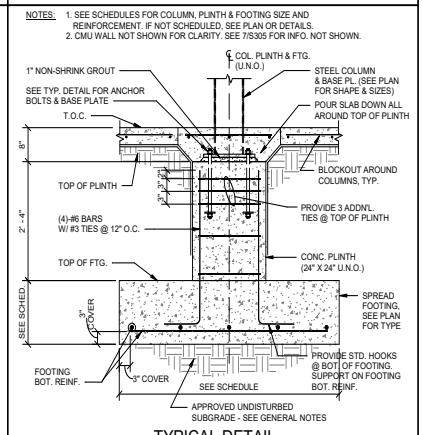

TYPICAL DETAIL
INTERIOR STEEL COLUMN ON SPREAD
FOOTING CONCRETE PLINTH

1 SCALE: 3/4" = 1'-0"

4.1284

PROFESSIONAL SEAL

Matrix Structural Engineers
TBPE Firm Registration No. F-2640

STATE OF TEXAS
ARNOLD A. KWAYSKITTIE
66260
REGISTERED PROFESSIONAL ENGINEER

01/14/20

LOGO/CONTACT

MATRIX STRUCTURAL ENGINEERS

5177 Richmond Avenue, Suite 670
Houston, TX 77056-2401
Tel: 713.664.0133
Fax: 713.664.1370
MSE - 18134

DESIGN TEAM

Architectural
Martinez Architects

Civil Engineer
Maverick Engineering

Structural
Matrix Structural Engineers

MEP
DBR

Landscaping
KDC Associates

FIRE STATION #5

CITY OF MIDLAND
2200 W GOLF COURSE RD
MIDLAND, TX 79701

PROJECT No: **MA 18017**
DATE: **01/14/2020**

No.	Date	Description
	05/21/19	100% DD
	07/30/19	ISSUE FOR PERMIT
	01/14/20	99% CD

FOUNDATION DETAILS

S304

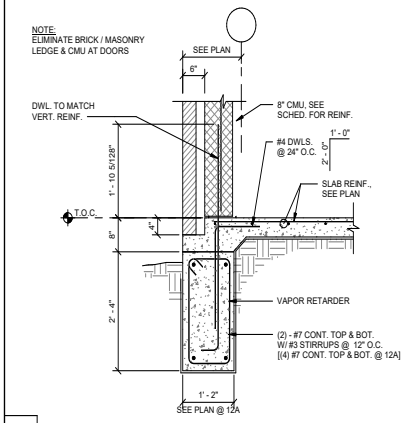

12A

TYPICAL DETAIL
EXTERIOR GRADE BEAM

12 SCALE: 3/4" = 1'-0"

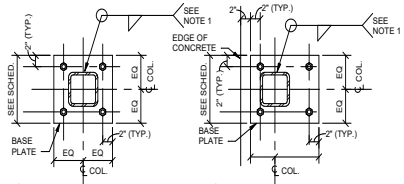

BASE PLATE SCHEDULE		
COLUMN	BASE PLATE	ANCHOR BOLTS
HSS 4 x 4	12" x 12" x 3/4"	(4)-3/4"Ø TYPE A
HSS 6 x 6	14" x 14" x 3/4"	(4)-3/4"Ø TYPE A
HSS 12 x 12	24" x 24" x 1"	(4)-1 3/4"Ø TYPE B

NOTES:
1. MINIMUM FILLET WELD ACCORDING TO AISC (1/4" MIN.). WELDING AROUND CORNER RADIUS IS NOT REQUIRED U.N.O.
2. USE OVERSIZED HOLES FOR ANCHOR RODS ACCORDING TO AISC.
3. WASHERS SHALL BE INSTALLED OVER OVERSIZED HOLES.
4. CONTRACTOR SHALL PROVIDE 1/8" THICK TEMPLATE FOR ANCHOR ROD INSTALLATION.

9 SCALE: N.T.S.

TYPICAL DETAIL
BASE PLATE AT HSS COLUMNS

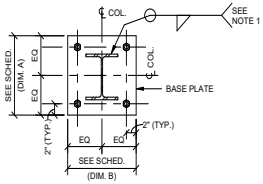

BASE PLATE AT W COLUMN

BASE PLATE SCHEDULE		
COLUMN	BASE PLATE A x B x THICKNESS	ANCHOR BOLTS
W8x24	14" x 14" x 3/4"	(4)-3/4"DIA TYPE A
W8x35/W8x40	16" x 14" x 1"	(4)-3/4"DIA TYPE A

NOTES:
1. MINIMUM FILLET WELD ACCORDING TO AISC (1/4" MIN.). WELDING INSIDE RADIUS AND AROUND TOES OF FLANGES UP TO ONE WELD SIZE FROM EDGE NOT REQUIRED U.N.O.
2. USE OVERSIZED HOLES FOR ANCHOR RODS ACCORDING TO AISC.
3. WASHERS SHALL BE INSTALLED OVER OVERSIZED HOLES.
4. CONTRACTOR SHALL PROVIDE 1/8" THICK TEMPLATE FOR ANCHOR ROD INSTALLATION.

6 SCALE: N.T.S.

TYPICAL DETAIL
BASE PLATE AT WIDE FLANGE COLUMNS

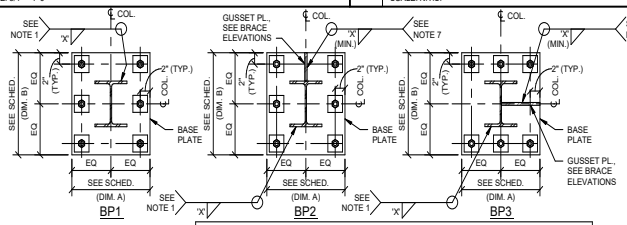

BASE PLATE SCHEDULE				
TYPE	BASE PLATE A x B x THICKNESS	ANCHOR BOLTS	BASE PLATE MATERIAL	WELD SIZE 'X' FOR BASE PLATE*
BP-1	18" x 18" x 1 1/4"	(6)-1" Ø TYPE B	ASTM A36	5/16"
BP-2	18" x 18" x 1 1/4"	(6)-1-1/4" Ø TYPE B	ASTM A36	5/16"
BP-3	18" x 18" x 1 1/4"	(6)-1-1/4" Ø TYPE B	ASTM A36	5/16"

* - PARTIAL PENETRATION GROOVE WELDS OF EQUAL CAPACITY OR COMPLETE JOINT PENETRATION GROOVE WELDS ARE ALSO ACCEPTABLE.

NOTES:
1. WELDING INSIDE RADIUS & AROUND TOES OF FLANGES UP TO ONE WELD SIZE FROM EDGE NOT REQUIRED.
2. USE OVERSIZED HOLES FOR ANCHOR RODS ACCORDING TO AISC.
3. WASHERS SHALL BE INSTALLED OVER OVERSIZED HOLES.
4. CONTRACTOR SHALL PROVIDE 1/8" THICK TEMPLATE FOR ANCHOR ROD INSTALLATION.
5. AT CONTRACTOR PREFERENCE BASE PLATE MAY BE SUBSTITUTED WITH 50 KSI STEEL ALTERNATE SHOWN.
6. GROUT HOLE DIAMETER MAY MATCH BOLT HOLE DIAMETER AT CONTRACTOR PREFERENCE.
7. GUSSET PLATE WELD TO BE DESIGNED BY FABRICATOR FOR FORCES SHOWN ON BRACE ELEVATIONS, BUT SHALL NOT BE LESS THAN THE SIZE SHOWN.

11 SCALE: N.T.S.

TYPICAL DETAIL BASE PLATE AT BRACE WIDE FLANGE COLUMNS

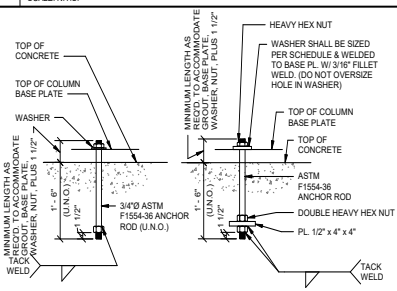

TYPE "B" WASHER SCHEDULE		
ANCHOR ROD DIA.	WASHER SIZE*	MIN. WASHER THICKNESS
3/4"	2"	1/4"
7/8"	2 1/2"	5/16"
1"	3"	3/8"
1 1/4"	3 1/2"	1/2"
1 1/2"	4"	1/2"
1 3/4"	4 1/2"	5/8"
2"	5"	3/4"
2 1/2"	5 1/2"	7/8"

NOTE:
USE TYPE "B" ANCHOR BOLTS AT COLUMNS WITH DIAGONAL BRACES, MOMENT CONNECTIONS, & AT CANOPY COLUMNS

*CIRCULAR OR SQUARE WASHERS MEETING WASHER SIZE ARE ACCEPTABLE

5 SCALE: N.T.S.

TYPICAL DETAIL ANCHOR BOLT

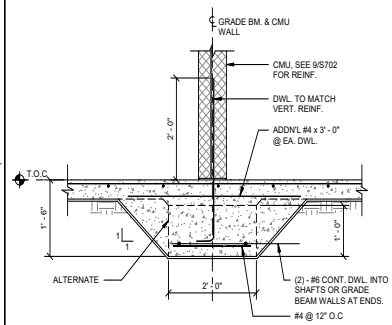

2 SCALE: N.T.S.

TYPICAL DETAIL
AT NON-LOAD BEARING CMU WALL

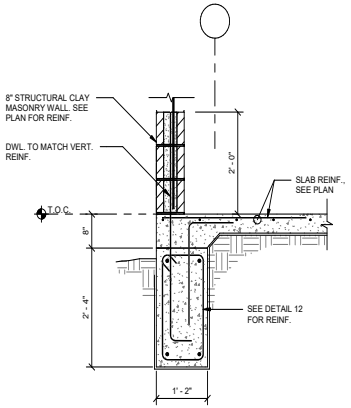

10 SCALE: 3/4" = 1'-0"

TYPICAL DETAIL
EXTERIOR GRADE BEAM

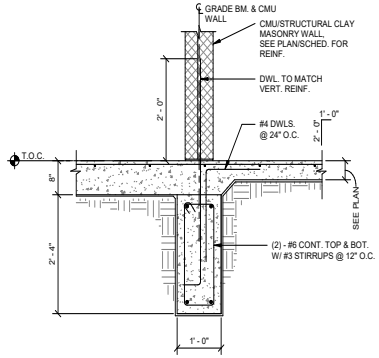

7 SCALE: 3/4" = 1'-0"

TYPICAL DETAIL
INTERIOR GRADE BEAM
AT NON-LOAD BEARING WALL

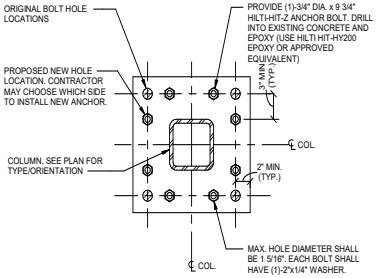

NOTES:
1. THIS DETAIL SHALL NOT BE USED AT BRACE FRAMES OR MOMENT FRAMES. ENGINEER APPROVAL IS REQUIRED PRIOR TO INSTALLATION FOR EA. LOCATION WITH DAMAGED ANCHOR BOLTS.
2. CUT AWAY DAMAGED ANCHOR BOLTS AND PROVIDE NEW HOLES FOR EPOXY ANCHOR.
3. HIT-Z-R ANCHORS SHALL BE USED IN LIEU OF HIT-Z ANCHORS AT COLUMNS EXPOSED TO WEATHER.

4 SCALE: N.T.S.

TYPICAL DETAIL
REPAIR AT GRAVITY BASE PLATE

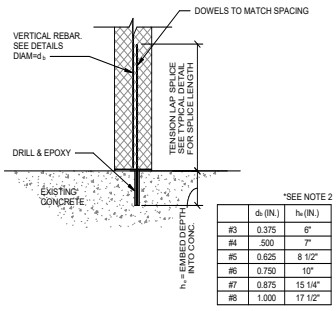

	d_b (IN.)	h_{ef} (IN.)
#3	0.375	6"
#4	.500	7"
#5	0.625	8 1/2"
#6	0.750	10"
#7	0.875	15 1/4"
#8	1.000	17 1/2"

NOTES:
1. THIS DETAIL MAY BE USED IN LIEU OF CAST-IN-PLACE DOWELS WHERE SHOWN ON STRUCTURAL DETAILS EXCEPT WHERE PROHIBITED BY NOTE 2.
2. THIS DETAIL IS NOT APPLICABLE AT CANTILEVER WALLS OR WALLS SUBJECTED TO MOMENT AT THE BASE.
3. USE HILTI HIT-HY200 ADHESIVE SYSTEM OR APPROVED EQUIVALENT.

1 SCALE: N.T.S.

ALTERNATE DETAIL
EPOXY DOWELS AT CMU WALLS

PROFESSIONAL SEAL
Matrix Structural Engineers
TBPE Firm Registration No. F-2640
ARNOLD A. KWAYSATTEE
66260
LICENSED PROFESSIONAL ENGINEER
STATE OF TEXAS
01/14/20

LOGO/CONTACT
MATRIX STRUCTURAL ENGINEERS
5177 Richmond Avenue, Suite 670
Houston, TX 77046-2401
Tel: 713.664.0133
Fax: 713.664.1370
MSE - 18134

DESIGN TEAM
Architectural
Martinez Architects
Civil Engineer
Maverick Engineering
Structural
Matrix Structural Engineers
MEP
DBR
Landscaping
KDC Associates

FIRE STATION #5
CITY OF MIDLAND
2200 W GOLF COURSE RD
MIDLAND, TX 79701

PROJECT No: **MA 18017**
DATE: **01/14/2020**

No.	Date	Description
	05/21/19	100% DD
	07/30/19	ISSUE FOR PERMIT

FOUNDATION DETAILS

S305

4.1285

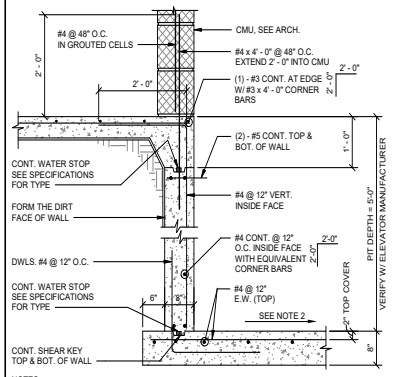

NOTES:
1. BRACE WALL AS REQUIRED UNTIL UPPER SLAB IS POURED AND HAS REACHED 2,500 PSI MINIMUM.
2. SEE PLAN FOR SUMP PIT, WHERE REQUIRED. SLOPE PIT BOTTOM SLAB 1" TO SUMP PIT.
3. SEE OTHER DETAILS FOR ELEVATOR SILL DETAIL.
4. GENERAL CONTRACTOR TO COORDINATE ELEVATOR PIT SIZE, DEPTH, SILL DETAIL AND BLOCK OUT REQUIREMENTS WITH ELEVATOR MANUFACTURER'S APPROVED SHOP DRAWINGS.
5. WHERE ELEVATOR PIT SLAB IS BLOCKED OUT TO ALLOW FOR PLACEMENT OF HYDRAULIC ELEVATOR JACK, FILL BLOCK OUT WITH CONCRETE AFTER JACK IS SET.

6 TYPICAL DETAIL - AT ELEVATOR PIT

SCALE: 3/4" = 1'-0"

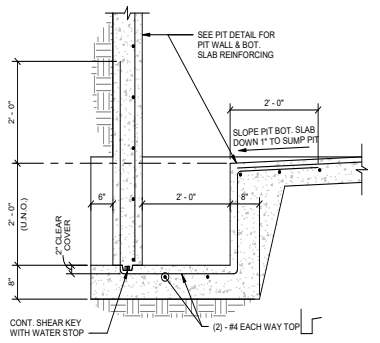

NOTE:
1. SEE PLAN FOR LOCATION AND SIZE WHERE DIFFERENT FROM DIMENSIONS SHOWN IN THIS DETAIL.

3 TYPICAL DETAIL
ELEVATOR SUMP PIT

SCALE: N.T.S.

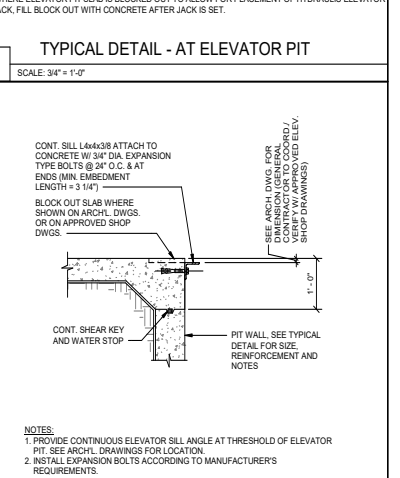

NOTES:
1. PROVIDE CONTINUOUS ELEVATOR SILL ANGLE AT THRESHOLD OF ELEVATOR PIT. SEE ARCH'L. DRAWINGS FOR LOCATION.
2. INSTALL EXPANSION BOLTS ACCORDING TO MANUFACTURER'S REQUIREMENTS.

5 TYPICAL DETAIL
ELEVATOR PIT SILL ANGLE CONNECTION

SCALE: 3/4" = 1'-0"

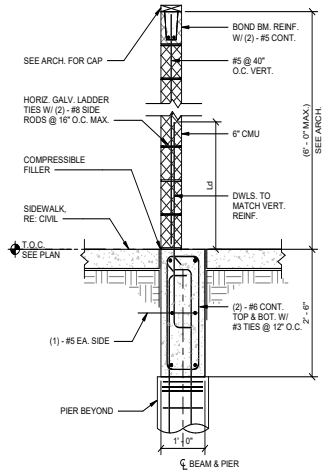

2 TYPICAL DETAIL
GRADE BEAM AT FREESTANDING WALL

SCALE: 3/4" = 1'-0"

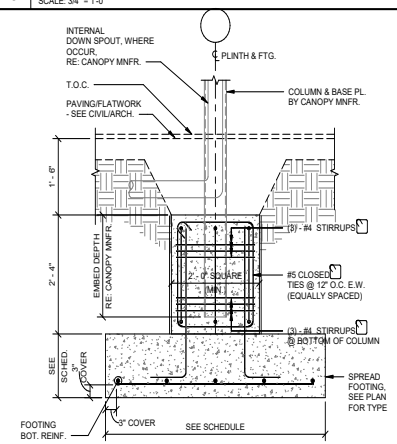

4 TYPICAL DETAIL EMBEDDED EXTERIOR
CANOPY COLUMN WITH PIER CAP

SCALE: 3/4" = 1'-0"

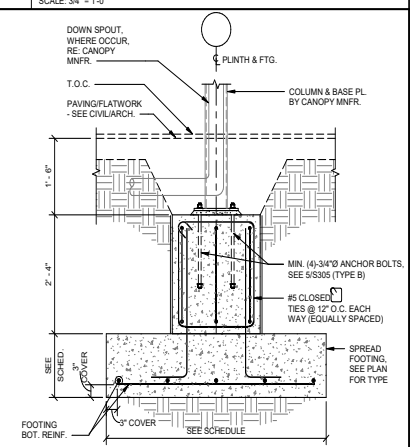

1 TYPICAL DETAIL
EXTERIOR CANOPY COLUMN WITH PIER CAP

SCALE: 3/4" = 1'-0"

4.1286

PROFESSIONAL SEAL

Matrix Structural Engineers
TBPE Firm Registration No. F-2640

01/14/20

LOGO/CONTACT

MATRIX
STRUCTURAL
ENGINEERS

5177 Richmond Avenue, Suite 670
Houston, TX 77046-2401
Tel: 713.664.0133
Fax: 713.664.1370
MSE - 18134

DESIGN TEAM

Architectural
Martinez Architects

Civil Engineer
Maverick Engineering

Structural
Matrix Structural Engineers

MEP
DBR

Landscaping
KDC Associates

FIRE STATION #5

CITY OF MIDLAND
2200 W GOLF COURSE RD
MIDLAND, TX 79701

PROJECT No: **MA 18017**
DATE: **01/14/2020**

No.	Date	Description
	05/21/19	100% DD
	07/30/19	ISSUE FOR PERMIT
	01/14/20	99% CD

FOUNDATION DETAILS

S306

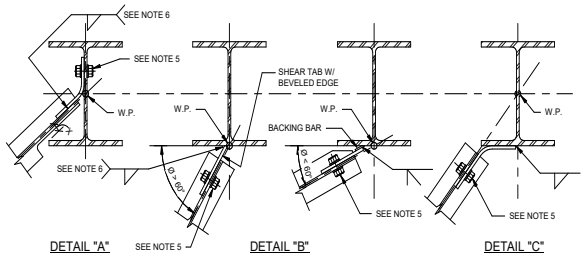

NOTES:
1. FABRICATOR SHALL ASSUME WORK POINT TO BE LOCATED AT CENTERLINE OF COLUMN FOR VALUES OF X >= 1" AND PROVIDE CONNECTION AS SPECIFIED IN DETAIL "A". FABRICATOR SHALL ASSUME LOCATION OF WORK POINT TO BE AT COLUMN FLANGE-WEB INTERSECTION AND PROVIDE CONNECTION AS SPECIFIED IN DETAIL B WHERE CLEARANCE DOES NOT EXIST FOR DETAIL "A" TO APPLY. FABRICATOR SHALL APPLY DETAIL "C" ONLY WHEN LOCATION OF WORK POINT MUST BE LOCATED AT COLUMN CENTERLINE AND CLEARANCE DOES NOT EXIST FOR DETAIL "A" TO APPLY. LOCATION OF WORK POINTS SHALL BE APPROVED BY THE ENGINEER PRIOR TO SHOP DRAWING SUBMITTAL.
2. SHEAR TAB CONNECTION MAY BE USED ONLY WHERE WORK POINT IS AT INTERSECTION OF COLUMN FLANGE AND WEB.
3. SINGLE BENT PLATES SHALL BE DESIGNED FOLLOWING PROCEDURES OUTLINED IN THE AISC MANUAL.
4. REFER TO GENERAL NOTES FOR CONNECTION DESIGN CRITERIA.
5. BOLTED CONNECTION, REFER TO GENERAL NOTES.
6. SHOP WELDED CONNECTION TO DEVELOP BEAM REACTION. REFER TO GENERAL NOTES.

TYPICAL DETAIL
SKEWED STEEL BEAM TO WIDE FLANGE COLUMN SHEAR CONNECTION

12 SCALE: N.T.S.

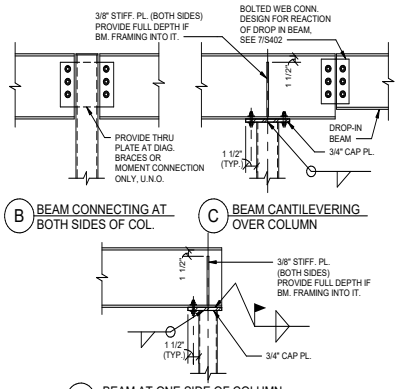

TYPICAL DETAIL
STEEL BEAM TO
TUBE/PIPE - COL.

6 SCALE: N.T.S.

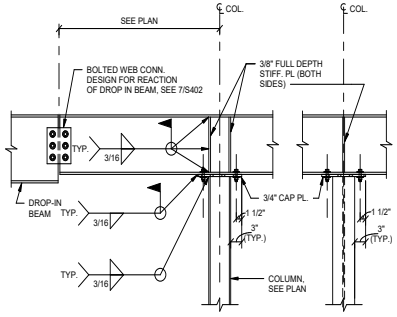

NOTE:
1. JOISTS, METAL DECK AND BRACES NOT SHOWN FOR CLARITY. SEE PLAN FOR BRACE LOCATIONS.

TYPICAL DETAIL
CANTILEVER BEAM
OVER COLUMN CONNECTION

3 SCALE: N.T.S.

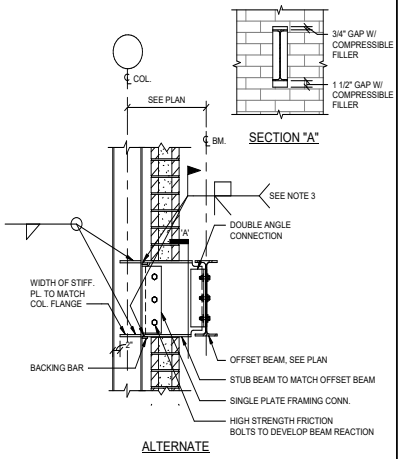

ALTERNATE

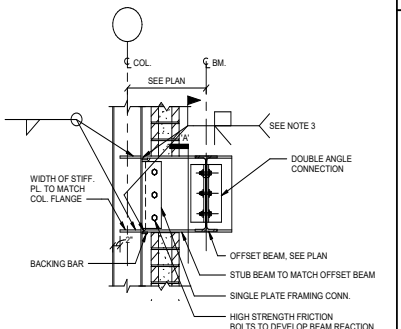

NOTE:
1. BOLTS IN WEB CONNECTION SHALL BE TIGHTENED PRIOR TO WELDING OF FLANGES.
2. U.N.O. FLANGE PLATES, BOLTS, AND WELDS SHOWN SHALL BE DESIGNED FOR AN AXIAL TENSION/COMPRESSION EQUAL TO 90% OF THE BEAM PLASTIC MOMENT CAPACITY DIVIDED BY THE DISTANCE BETWEEN FLANGE CENTROIDS. T=C=0.90Mp/(D-tf), WHERE DESIGN MOMENTS ARE PROVIDED THEY MAY BE USED IN LIEU OF THE AFOREMENTIONED CRITERIA. T=C=Mu/(D-tf)
3. WHERE MOMENTS ARE PROVIDED PJP WELDS MAY BE USED IN LIEU OF CJP WELDS. SEE NOTE 2 FOR DESIGN CRITERIA.

TYPICAL DETAIL
OFFSET STEEL BEAM TO COLUMN FLANGE
MOMENT CONNECTION

10 SCALE: 3/4" = 1'-0"

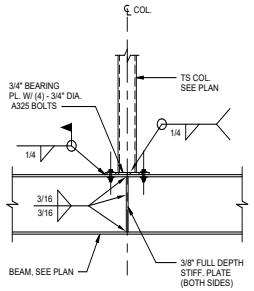

TYPICAL DETAIL
STUB COLUMN ON STEEL BEAM

7 SCALE: N.T.S.

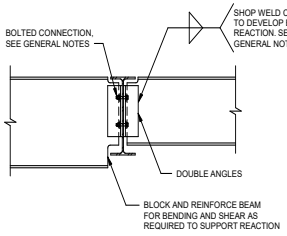

NOTES :
1. REFER TO GENERAL NOTES FOR BEAM REACTION DESIGN CRITERIA.
2. PROVIDE PRE-DESIGNED CONNECTIONS AS SHOWN IN AISC MANUAL PART 4 WHERE APPLICABLE.
3. REFER TO GENERAL NOTES FOR BOLT TYPE.
4. ALL CONNECTIONS SHALL MEET THE ROTATIONAL DUCTILITY AND STABILITY REQUIREMENTS PROVIDED BY AISC.

TYPICAL DETAIL
BEAM TO BEAM DOUBLE ANGLE
SHEAR CONNECTION

5 SCALE: N.T.S.

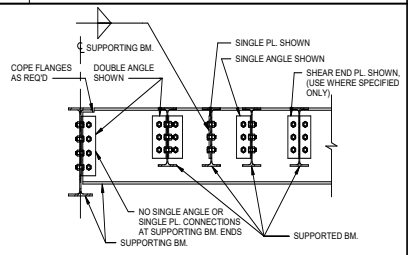

NOTES:
1. REFER TO GENERAL NOTES FOR BEAM REACTION DESIGN CRITERIA.
2. PROVIDE PRE-DESIGNED CONNECTIONS AS SHOWN IN AISC MANUAL WHERE APPLICABLE.
3. REFER TO GENERAL NOTES FOR BOLT TYPE.
4. SUPPORTED BEAMS PRIMARILY SUPPORT DISTRIBUTED LOADS FROM SLABS OR DECKING.
5. SUPPORTING BEAMS SUPPORT SIGNIFICANT POINT LOADS FROM ONE OR MORE SUPPORTED BEAMS OR FROM COLUMNS BEING TRANSFERRED. SUPPORTING BEAMS MAY BE SUPPORTED BY COLUMNS OR BY OTHER SUPPORTING BEAMS.
6. FOR AISC SIMPLE SHEAR CONNECTIONS AT SUPPORTED BEAM ENDS, USE DOUBLE ANGLE, SINGLE PLATE, OR SINGLE ANGLE U.N.O.
7. WELDED/BOLTED, WELDED/WELDED OR BOLTED/BOLTED CONNECTIONS PER AISC ARE PERMITTED.
8. ALL CONNECTIONS SHALL MEET THE ROTATIONAL DUCTILITY AND STABILITY REQUIREMENTS PROVIDED BY AISC.

TYPICAL DETAIL
BEAM TO BEAM SHEAR
CONNECTION (4 TYPES)

2 SCALE: N.T.S.

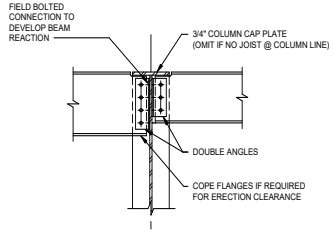

NOTES :
1. REFER TO GENERAL NOTES FOR BEAM REACTION DESIGN CRITERIA.
2. PROVIDE PRE-DESIGNED CONNECTIONS AS SHOWN IN AISC MANUAL WHERE APPLICABLE.
3. REFER TO GENERAL NOTES FOR BOLT TYPE.

TYPICAL DETAIL
STEEL BEAM TO WF COLUMN
DOUBLE ANGLE SHEAR CONNECTION

4 SCALE: N.T.S.

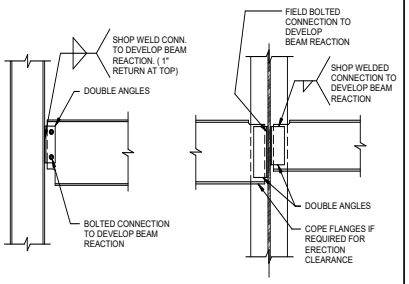

NOTES:
1. DOUBLE ANGLES MAY BE SHOP WELDED TO THE BEAM AND FIELD BOLTED TO THE COLUMN AT CONTRACTOR'S OPTION.
2. REFER TO GENERAL NOTES FOR BEAM REACTION DESIGN CRITERIA.
3. PROVIDE PRE-DESIGNED CONNECTIONS AS SHOWN IN AISC MANUAL WHERE APPLICABLE.
4. REFER TO GENERAL NOTES FOR BOLT TYPE.

TYPICAL DETAIL
STEEL BEAM TO WIDE FLANGE COLUMN
DOUBLE ANGLE SHEAR CONNECTION

1 SCALE: N.T.S.

4.1287

PROFESSIONAL SEAL
Matrix Structural Engineers
TBPE Firm Registration No. F-2640
STATE OF TEXAS
MARIOS A. KYRIAZIS
66260
REGISTERED PROFESSIONAL ENGINEER
01/14/20

LOGO/CONTACT
MATRIX STRUCTURAL ENGINEERS
5177 Richmond Avenue, Suite 670
Houston, TX 77056-2401
Tel: 713.664.0133
Fax: 713.664.1370
MSE - 18134

DESIGN TEAM
Architectural
Martinez Architects
Civil Engineer
Maverick Engineering
Structural
Matrix Structural Engineers
MEP
DBR
Landscaping
KDC Associates

FIRE STATION #5
CITY OF MIDLAND
2200 W GOLF COURSE RD
MIDLAND, TX 79701

PROJECT No: **MA 18017**
DATE: **01/14/2020**

No.	Date	Description
	05/21/19	100% DD
	07/30/19	ISSUE FOR PERMIT
	01/14/20	99% CD

FRAMING DETAILS

S401

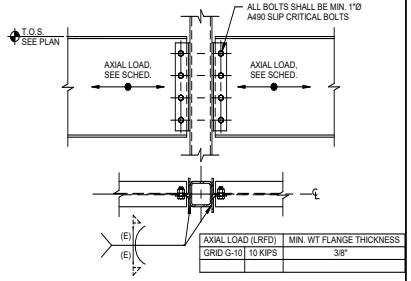

AXIAL LOAD (LRFD)		MIN. WT FLANGE THICKNESS
GRID G-10	10 KIPS	3/8"

NOTES:
1. REFER TO GENERAL NOTES FOR BEAM REACTION DESIGN CRITERIA, WELDS/BOLTS SHALL BE DESIGNED TO WITHSTAND AN ADDITIONAL AXIAL LOAD (LRFD), ACTING SIMULTANEOUS TO THE END REACTION, SEE SCHEDULE.
2. APPLY THIS DETAIL AT ALL CONNECTIONS MARKED (SC) ON PLAN.
3. ALLOWABLE STRENGTH OF BOLTS SHALL BE BASED ON A CLASS A FAYING SURFACE, DO NOT PAINT STEEL AT SLIP CRITICAL CONNECTIONS.
4. WELD SIZES W & E SHALL MEET AISC MIN. SIZE TO ENSURE ROTATIONAL DUCTILITY.
5. WT WEB THICKNESS SHALL NOT EXCEED 7/16".
6. EITHER WELDED/BOLTED OR WELDED/WELDED CONNECTIONS ARE ACCEPTABLE.
7. THE FLANGES SHALL BE DESIGNED FOR OUT OF PLANE BENDING DUE TO AXIAL LOAD.
8. ALL CONNECTIONS SHALL MEET THE ROTATIONAL DUCTILITY AND STABILITY REQUIREMENTS PROVIDED BY AISC.

ALTERNATE DETAIL
STEEL BEAM TO TUBE COLUMN CONNECTION

12 SCALE: N.T.S.

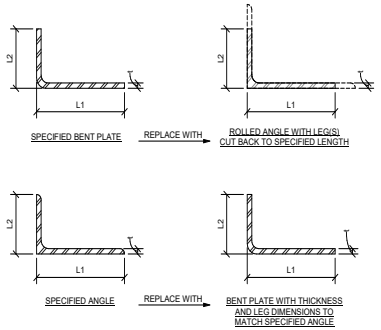

NOTE:
AT CONTRACTOR/FABRICATOR PREFERENCE ANGLE AND 90° BENT PLATES MAY BE SUBSTITUTED AS SHOWN U.N.O. BY EOR/ARCH.

TYPICAL DETAIL
ANGLE OR BENT PLATE SUBSTITUTION

9 SCALE: N.T.S.

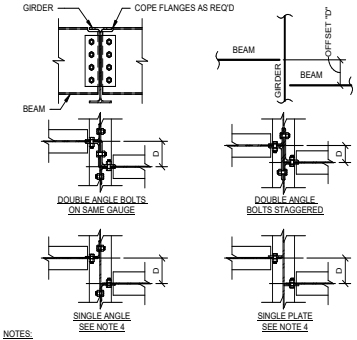

NOTES:
1. REFER TO GENERAL NOTES FOR BEAM REACTION DESIGN CRITERIA.
2. PROVIDE PRE-DESIGNED CONNECTIONS AS SHOWN IN AISC MANUAL WHERE APPLICABLE.
3. WELDED/BOLTED, WELDED/WELDED OR BOLTED/BOLTED CONNECTIONS PER AISC ARE PERMITTED.
4. SINGLE ANGLE AND SINGLE PLATE CONNECTIONS SHALL ONLY BE USED AT SUPPORTED BEAM ENDS. SEE 2/S401 FOR DEFINITION FOR SUPPORTED BEAM.
5. IN LIEU OF DETAILS SHOWN, STEEL DETAILER MAY SUGGEST ALTERNATE DETAILS FOR REVIEW AND APPROVAL.

TYPICAL DETAIL
CONNECTION AT OFFSET BEAMS

6 SCALE: N.T.S.

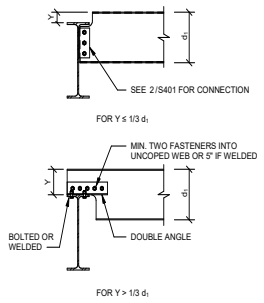

NOTES:
1. REFER TO GENERAL NOTES FOR BEAM REACTION DESIGN CRITERIA.
2. REFER TO GENERAL NOTES FOR BOLT TYPE.

TYPICAL DETAIL
CONNECTION TO RAISED BEAMS

3 SCALE: N.T.S.

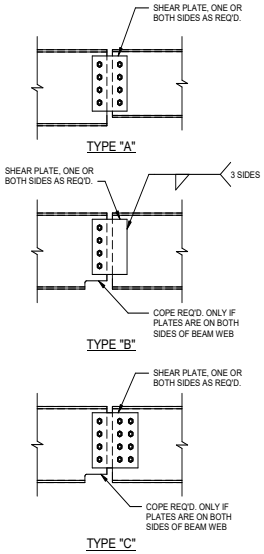

OPTION 1: PLATE TYPE SHEAR SPLICES

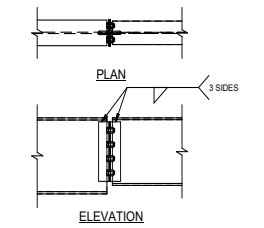

NOTES:
1. REFER TO GENERAL NOTES FOR BEAM REACTION DESIGN CRITERIA.
2. REFER TO GENERAL NOTES FOR BOLT TYPE.
3. ALL CONNECTIONS SHALL MEET THE ROTATIONAL DUCTILITY AND STABILITY REQUIREMENTS PROVIDED BY AISC.

OPTION 2: ANGLE TYPE SHEAR SPLICE

TYPICAL DETAIL
SHEAR SPLICE AT BEAM

7 SCALE: N.T.S.

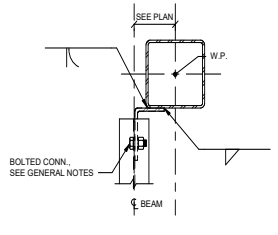

NOTES:
1. SINGLE BENT PLATES SHALL BE DESIGNED FOLLOWING PROCEDURES OUTLINED IN THE AISC MANUAL.
2. REFER TO GENERAL NOTES FOR CONNECTION DESIGN CRITERIA.

TYPICAL DETAIL
OFFSET BEAM TO COLUMN SHEAR CONNECTION

5 SCALE: N.T.S.

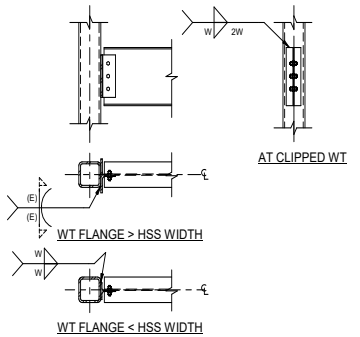

NOTES:
1. WELD SIZES W & E SHALL MEET AISC MIN. SIZE TO ENSURE ROTATIONAL DUCTILITY.
2. WT WEB THICKNESS SHALL NOT EXCEED 7/16".
3. THIS DETAIL MAY BE USED IN LIEU OF THE TYPICAL CONN. DETAIL AT CONTRACTOR PREFERENCE.
4. REFER TO GENERAL NOTES FOR BEAM REACTION DESIGN CRITERIA.
5. REFER TO GENERAL NOTES FOR BOLT TYPE.
6. EITHER WELDED/BOLTED OR WELDED/WELDED CONNECTIONS ARE ACCEPTABLE.

ALTERNATE DETAIL
STEEL BEAM TO TUBE COLUMN CONNECTION

4 SCALE: N.T.S.

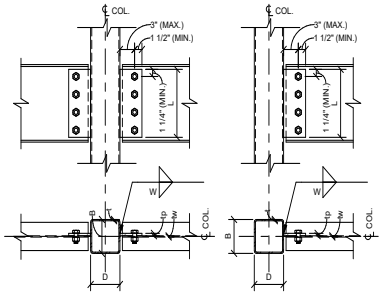

MAX. COLUMN WIDTH	
t	B OR D MAX.
3/16"	6"
1/4"	8"
5/16"	10"
3/8"	12"
1/2"	16"
5/8"	18"

MAX. DESIGN END REACTION Ru (KIPS)*						
L (IN.)	t = 3/16"	t = 1/4"	t = 5/16"	t = 3/8"	t = 1/2"	t = 5/8"
5.5	15	20	25	30	40	50
8.5	36	48	60	73	97	121
11.5	66	89	111	133	178	222
14.5	106	142	177	212	283	354
17.5	154	206	258	309	412	516
20.5	212	283	354	425	566	708
23.5	278	373	466	558	744	930
26.5	354	474	592	710	946	1183

* - VALUES SHOWN FOR ASTM A500 GR. B STEEL. FOR ASTM A500 GR. C, MULTIPLY VALUES BY 1.07.

NOTES:
1. REFER TO GENERAL NOTES FOR BEAM REACTION DESIGN CRITERIA, REACTIONS SHOWN ARE FACTORED LOADS (LRFD).
2. PROVIDE PRE-DESIGNED CONNECTIONS AS SHOWN IN AISC MANUAL WHERE APPLICABLE.
3. REFER TO GENERAL NOTES FOR BOLT TYPE.
4. THIS CONNECTION MAY ONLY BE USED WITH THE GEOMETRY SHOWN ABOVE AND WHERE THE BEAM DESIGN REACTION IS LESS THAN THE VALUE SHOWN IN THE SCHEDULE. ALL VALUES SHOWN ARE ULTIMATE DESIGN (LRFD) VALUES.
5. tp AND/OR tw SHALL BE LESS THAN OR EQUAL TO 1/4" AT 3/16" THICK HSS TUBES. AT THICKER TUBES tp AND/OR tw SHALL BE LESS THAN OR EQUAL TO 7/16" FOR CONNECTIONS WITH 2 TO 5 BOLTS, AND SHALL BE LESS THAN OR EQUAL TO 5/16" FOR CONNECTIONS WITH 6 OR MORE BOLTS.
6. COLUMN WIDTH B OR D SHALL BE LESS THAN OR EQUAL TO THE MAXIMUM WIDTH SHOWN IN THE SCHEDULE.
7. W SHALL BE 5/8 (tp).
8. FOR TWO SIDED CONNECTIONS, ALL CRITERIA MUST BE MET AT BOTH SIDES. WHERE ONLY ONE SIDE FAILS THE CRITERIA A WT CONNECTION MAY BE PROVIDED AT THAT SIDE.
9. THIS DETAIL IS NOT ALLOWED AT BRACED FRAMES OR OTHER AXIALLY LOADED CONNECTIONS.
10. SEE 6/S401 FOR THRU PLATE AND END BEARING CONNECTIONS OR SEE 4/S402 FOR WT CONNECTIONS WHERE THIS DETAIL DOES NOT APPLY.
11. PLATE DEPTH "L" SHALL NOT BE LESS THAN 1/2 THE "T" DIMENSION OF THE SUPPORTED BEAM.

TYPICAL DETAIL
SINGLE PLATE TO RECTANGULAR HSS WALL CONNECTION

1 SCALE: N.T.S.

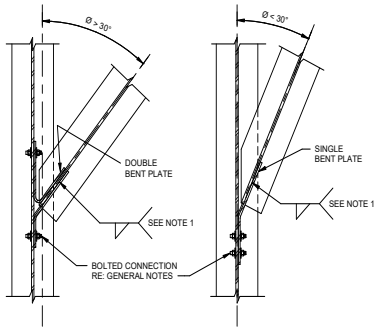

NOTE:
1. SHOP WELD CONNECTION TO DEVELOP BEAM REACTION. REFER TO GENERAL NOTES.

TYPICAL DETAIL
SKEWED BEAM TO BEAM SHEAR CONNECTION

10 SCALE: N.T.S.

4.1288

PROFESSIONAL SEAL

Matrix Structural Engineers
TBPE Firm Registration No. F-2640
ARNOLD A. KWAYSKATTIE
66260
LICENSED PROFESSIONAL ENGINEER
01/14/20

LOGO/CONTACT

MATRIX STRUCTURAL ENGINEERS
5177 Richmond Avenue, Suite 670
Houston, TX 77056-2401
Tel: 713.664.0133
Fax: 713.664.1370
MSE - 18134

DESIGN TEAM

Architectural
Martinez Architects

Civil Engineer
Maverick Engineering

Structural
Matrix Structural Engineers

MEP
DBR

Landscaping
KDC Associates

FIRE STATION #5

CITY OF MIDLAND
2200 W GOLF COURSE RD
MIDLAND, TX 79701

PROJECT No: **MA 18017**
DATE: **01/14/2020**

No.	Date	Description
	05/21/19	100% DD
	07/30/19	ISSUE FOR PERMIT
	01/14/20	99% CD

FRAMING DETAILS

S402

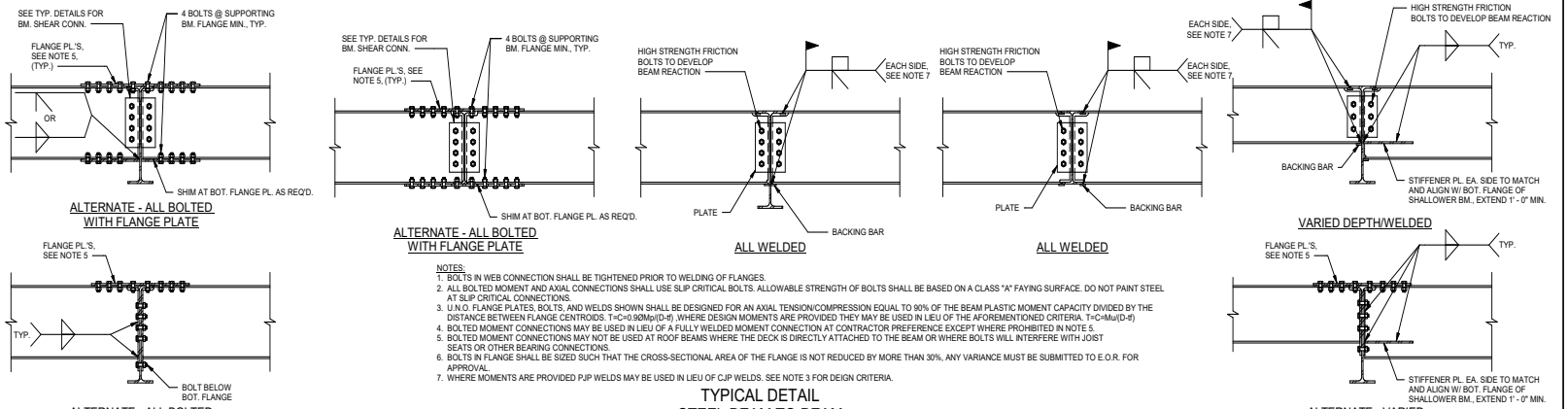

NOTES:
1. BOLTS IN WEB CONNECTION SHALL BE TIGHTENED PRIOR TO WELDING OF FLANGES.
2. ALL BOLTED MOMENT AND AXIAL CONNECTIONS SHALL USE SLIP CRITICAL BOLTS. ALLOWABLE STRENGTH OF BOLTS SHALL BE BASED ON A CLASS "A" FAYING SURFACE. DO NOT PAINT STEEL AT SLIP CRITICAL CONNECTIONS.
3. U.N.O. FLANGE PLATES, BOLTS, AND WELDS SHOWN SHALL BE DESIGNED FOR AN AXIAL TENSION/COMPRESSION EQUAL TO 90% OF THE BEAM PLASTIC MOMENT CAPACITY DIVIDED BY THE DISTANCE BETWEEN FLANGE CENTROIDS. T=C=0.90Mp/(D-tf), WHERE DESIGN MOMENTS ARE PROVIDED THEY MAY BE USED IN LIEU OF THE AFOREMENTIONED CRITERIA. T=C=Mu/(D-tf)
4. BOLTED MOMENT CONNECTIONS MAY BE USED IN LIEU OF A FULLY WELDED MOMENT CONNECTION AT CONTRACTOR PREFERENCE EXCEPT WHERE PROHIBITED IN NOTE 5.
5. BOLTED MOMENT CONNECTIONS MAY NOT BE USED AT ROOF BEAMS WHERE THE DECK IS DIRECTLY ATTACHED TO THE BEAM OR WHERE BOLTS WILL INTERFERE WITH JOIST SEATS OR OTHER BEARING CONNECTIONS.
6. BOLTS IN FLANGE SHALL BE SIZED SUCH THAT THE CROSS-SECTIONAL AREA OF THE FLANGE IS NOT REDUCED BY MORE THAN 30%, ANY VARIANCE MUST BE SUBMITTED TO E.O.R. FOR APPROVAL.
7. WHERE MOMENTS ARE PROVIDED PJP WELDS MAY BE USED IN LIEU OF CJP WELDS. SEE NOTE 3 FOR DEIGN CRITERIA.

TYPICAL DETAIL STEEL BEAM TO BEAM MOMENT CONNECTION

12 SCALE: N.T.S.

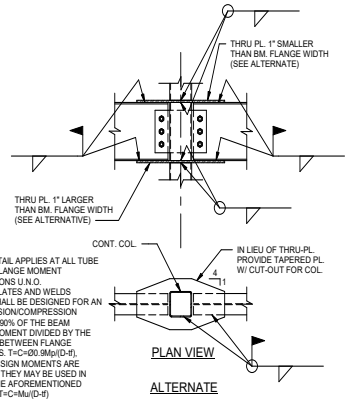

NOTES:
1. THIS DETAIL APPLIES AT ALL TUBE TO WIDE FLANGE MOMENT CONNECTIONS U.N.O.
2. U.N.O. PLATES AND WELDS SHOWN SHALL BE DESIGNED FOR AN AXIAL TENSION/COMPRESSION EQUAL TO 90% OF THE BEAM PLASTIC MOMENT DIVIDED BY THE DISTANCE BETWEEN FLANGE CENTROIDS. T=C=90.Mp/(D-tf), WHERE DESIGN MOMENTS ARE PROVIDED THEY MAY BE USED IN LIEU OF THE AFOREMENTIONED CRITERIA, T=C=Mu/(D-tf)

HIGH STRENGTH TUBE COLUMN TO WIDE FLANGE BEAM MOMENT CONNECTION

11 SCALE: N.T.S.

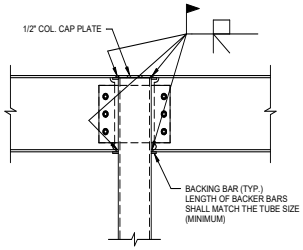

NOTES:
1. THIS DETAIL SHALL ONLY BE USED WHERE SPECIFICALLY NOTED. FOR GENERIC OR UNMARKED MOMENT CONNECTIONS, SEE 11/S403
2. BOLTS IN WEB CONNECTION SHALL BE TIGHTENED PRIOR TO WELDING OF FLANGES.

WIDE FLANGE BEAM TO TUBE COLUMN MOMENT CONNECTION

8 SCALE: N.T.S.

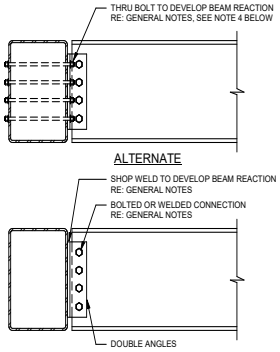

NOTES:
1. REFER TO GENERAL NOTES FOR BEAM REACTION DESIGN CRITERIA.
2. PROVIDE PRE-DESIGNED CONNECTIONS AS SHOWN IN AISC MANUAL PART 4 WHERE APPLICABLE.
3. REFER TO GENERAL NOTES FOR BOLT TYPE.
4. DO NOT PRETENSION THRU-BOLTS AT HSS TUBES, INSTALL BOLTS IN A SNUG-TIGHT CONDITION.

TYPICAL DETAIL WIDE FLANGE TO TUBE CONNECTION

5 SCALE: N.T.S.

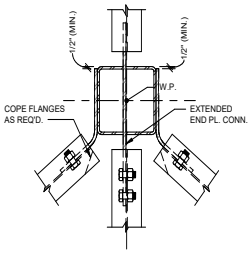

NOTES:
1. REFER TO GENERAL NOTES FOR BEAM REACTION DESIGN CRITERIA.
2. SINGLE BENT PLATES SHALL BE DESIGNED FOLLOWING PROCEDURES OUTLINED IN THE AISC MANUAL.

SKEWED STEEL BEAM TO COLUMN SHEAR CONNECTION

2 SCALE: N.T.S.

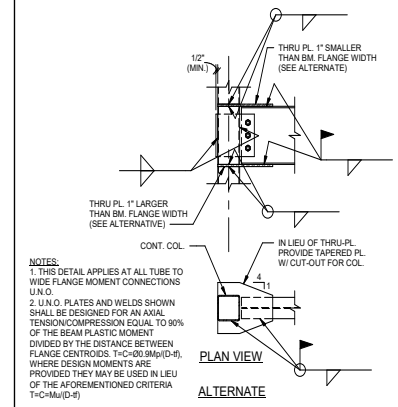

NOTES:
1. THIS DETAIL APPLIES AT ALL TUBE TO WIDE FLANGE MOMENT CONNECTIONS U.N.O.
2. U.N.O. PLATES AND WELDS SHOWN SHALL BE DESIGNED FOR AN AXIAL TENSION/COMPRESSION EQUAL TO 90% OF THE BEAM PLASTIC MOMENT DIVIDED BY THE DISTANCE BETWEEN FLANGE CENTROIDS. T=C=Ø0.9Mp/(D-tf), WHERE DESIGN MOMENTS ARE PROVIDED THEY MAY BE USED IN LIEU OF THE AFOREMENTIONED CRITERIA T=C=Mu/(D-tf)

HIGH STRENGTH TUBE COLUMN TO WIDE FLANGE BEAM MOMENT CONNECTION

10 SCALE: N.T.S.

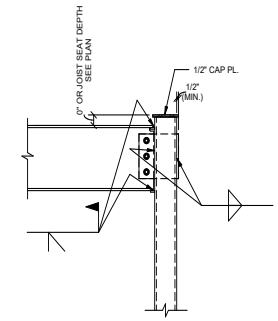

NOTES:
1. THIS DETAIL SHALL ONLY BE USED WHERE SPECIFICALLY NOTED. FOR GENERIC OR UNMARKED MOMENT CONNECTIONS, SEE
2. BOLTS IN WEB CONNECTION SHALL BE TIGHTENED PRIOR TO WELDING OF FLANGES.
3. THIS DETAIL MAY BE USED AT GRIDS M-1, M-3, H-1 & H-3.

TYPICAL DETAIL TUBE COLUMN TO WIDE FLANGE BEAM MOMENT CONNECTION

7 SCALE: N.T.S.

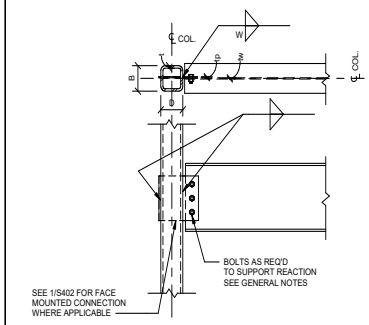

NOTES:
1. tp AND/OR tw SHALL BE LESS THAN OR EQUAL TO 1/4" AT 3/16" THICK HSS TUBES. AT THICKER TUBES tp AND/OR tw SHALL BE LESS THAN OR EQUAL TO 7/16" FOR CONNECTIONS WITH 2 TO 5 BOLTS, AND SHALL BE LESS THAN OR EQUAL TO 5/16" FOR CONNECTIONS WITH 6 OR MORE BOLTS.
2. PLATE DEPTH "L" SHALL NOT BE LESS THAN 1/2 THE "T" DIMENSION OF THE SUPPORTED BEAM.

TYPICAL DETAIL STEEL BEAM TO TUBE COLUMN CONNECTION AT FLOOR

4 SCALE: N.T.S.

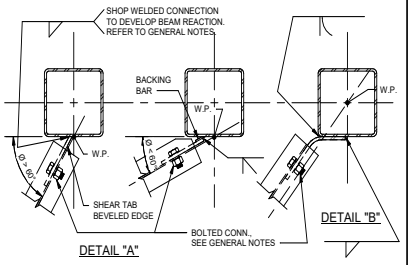

NOTES:
1. SHEAR TAB CONNECTION MAY BE USED ONLY WHERE WORK POINT IS AT FACE OF TUBE.
2. SINGLE BENT PLATES SHALL BE DESIGNED FOLLOWING PROCEDURES OUTLINED IN THE AISC MANUAL.
3. REFER TO GENERAL NOTES FOR CONNECTION DESIGN CRITERIA.
4. USE DETAIL "A" UNLESS CONDITIONS EXIST THAT REQUIRE WORK POINT TO BE LOCATED AT CENTERLINE OF TUBE SECTION (SPANDREL BEAM FOR EXAMPLE). LOCATION OF WORK POINTS SHALL BE APPROVED BY ENGINEER PRIOR TO SHOP DRAWING SUBMITTAL.
5. DETAIL "A" MAY BE USED WHERE THE BEAM DESIGN REACTION MEETS THE REQUIREMENTS SHOWN IN 1/S402.

TYPICAL DETAIL SKEWED STEEL BEAM TO COLUMN SHEAR CONNECTION

1 SCALE: N.T.S.

4.1289

PROFESSIONAL SEAL

Matrix Structural Engineers
TBPE Firm Registration No. F-2640

01/14/20

LOGO/CONTACT

MATRIX STRUCTURAL ENGINEERS

5177 Richmond Avenue, Suite 670
Houston, TX 77046-2401
Tel: 713.664.0133
Fax: 713.664.1370
MSE - 18134

DESIGN TEAM

Architectural
Martinez Architects

Civil Engineer
Maverick Engineering

Structural
Matrix Structural Engineers

MEP
DBR

Landscaping
KDC Associates

FIRE STATION #5

CITY OF MIDLAND
2200 W GOLF COURSE RD
MIDLAND, TX 79701

PROJECT No: **MA 18017**
DATE: **01/14/2020**

No.	Date	Description
	05/21/19	100% DD
	07/30/19	ISSUE FOR PERMIT
	01/14/20	99% CD

FRAMING DETAILS

S403

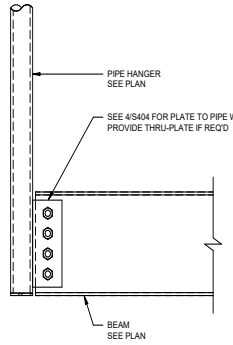

TYPICAL DETAIL
CONNECTION AT PIPE HANGER

3 SCALE: N.T.S.

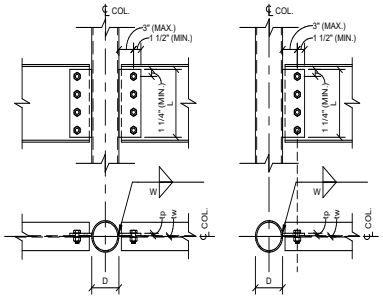

MAX. DESIGN END REACTION Ru (KIPS)*															
	STANDARD PIPE						X-STRONG PIPE				XX-STRONG PIPE				
L (IN.)	D = 4"	D = 5"	D = 6"	D = 8"	D = 10"	D = 12"	D = 4"	D = 5"	D = 6"	D = 8-1/2"	D = 4"	D = 5"	D = 6"	D = 8"	
5.5	20	21	23	27	30	31	28	31	36	42	56	63	73	74	
8.5	47	52	56	65	73	75	68	75	87	100	136	151	174	176	
11.5	87	95	103	119	134	138	124	138	159	184	249	277	319	323	
14.5	139	152	164	189	214	220	198	220	254	293	396	440	507	514	
17.5	203	221	239	275	312	320	289	320	370	427	576	642	739	749	
20.5	278	303	329	378	428	440	397	440	508	586	791	881	1014	1028	
23.5	366	399	432	497	563	578	521	578	667	770	1040	1158	1333	1351	
26.5	465	507	549	632	716	735	663	735	849	979	1323	1472	1695	1719	

* - D INDICATES NOMINAL PIPE DIAMETER

NOTES:
1. REFER TO GENERAL NOTES FOR BEAM REACTION DESIGN CRITERIA, REACTIONS SHOWN ARE FACTORED LOADS (LRFD).
2. PROVIDE PRE-DESIGNED CONNECTIONS AS SHOWN IN AISC MANUAL WHERE APPLICABLE.
3. REFER TO GENERAL NOTES FOR BOLT TYPE.
4. THIS CONNECTION MAY ONLY BE USED WITH THE GEOMETRY SHOWN ABOVE AND WHERE THE BEAM DESIGN REACTION IS LESS THAN THE VALUE SHOWN IN THE SCHEDULE. ALL VALUES SHOWN ARE ULTIMATE DESIGN (LRFD) VALUES.
5. tp AND/OR tw SHALL BE LESS THAN OR EQUAL TO 7/16" FOR CONNECTIONS WITH 2 TO 5 BOLTS. AND SHALL BE LESS THAN OR EQUAL TO 5/16" FOR CONNECTIONS WITH 6 OR MORE BOLTS.
6. W SHALL BE 5/8 (tp).
7. FOR TWO SIDED CONNECTIONS, ALL CRITERIA MUST BE MET AT BOTH SIDES.
8. THIS DETAIL IS NOT ALLOWED AT BRACED FRAMES OR OTHER AXIALLY LOADED CONNECTIONS.
9. SEE 6/S401 FOR THRU PLATE AND END BEARING CONNECTIONS WHERE THIS DETAIL DOES NOT APPLY.
10. PLATE DEPTH "L" SHALL NOT BE LESS THAN 1/2 THE "T" DIMENSION OF THE SUPPORTED BEAM.
11.

TYPICAL DETAIL
SINGLE PLATE TO PIPE
WALL CONNECTION

4 SCALE: N.T.S.

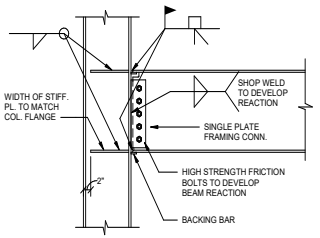

NOTE:
1. BOLTS IN WEB CONNECTION SHALL BE TIGHTENED PRIOR TO WELDING OF FLANGES.
2. U.N.O. FLANGE PLATES, BOLTS, AND WELDS SHOWN SHALL BE DESIGNED FOR AN AXIAL TENSION/COMPRESSION EQUAL TO 90% OF THE BEAM PLASTIC MOMENT CAPACITY DIVIDED BY THE DISTANCE BETWEEN FLANGE CENTROIDS. T=C=0.90Mp/(D-tf), WHERE DESIGN MOMENTS ARE PROVIDED THEY MAY BE USED IN LIEU OF THE AFOREMENTIONED CRITERIA. T=C=Mu/(D-tf)
3. WHERE MOMENTS ARE PROVIDED PJP WELDS MAY BE USED IN LIEU OF CJP WELDS. SEE NOTE 3 FOR DEIGN CRITERIA.

TYPICAL DETAIL
STEEL BEAM TO WIDE FLANGE COLUMN FLANGE
MOMENT CONNECTION

2 SCALE: N.T.S.

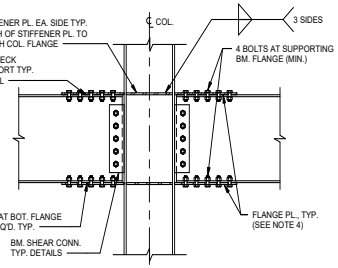

NOTES:
1. ALL BOLTED MOMENT AND AXIAL CONNECTIONS SHALL USE SLIP CRITICAL BOLTS. ALLOWABLE STRENGTH OF BOLTS SHALL BE BASED ON A CLASS "A" FAYING SURFACE. DO NOT PAINT STEEL AT SLIP CRITICAL CONNECTIONS.
2. U.N.O. FLANGE PLATES, BOLTS, AND WELDS SHOWN SHALL BE DESIGNED FOR AN AXIAL TENSION/COMPRESSION EQUAL TO 90% OF THE BEAM PLASTIC MOMENT CAPACITY DIVIDED BY THE DISTANCE BETWEEN FLANGE CENTROIDS. T=C=0.90Mp/(D-tf), WHERE DESIGN MOMENTS ARE PROVIDED THEY MAY BE USED IN LIEU OF THE AFOREMENTIONED CRITERIA. T=C=Mu/(D-tf)
3. THIS DETAIL MAY BE USED IN LIEU OF A FULLY WELDED MOMENT CONNECTION AT CONTRACTOR PREFERENCE EXCEPT WHERE PROHIBITED IN NOTE 4.
4. THIS DETAIL MAY NOT BE USED AT ROOF BEAMS WHERE THE DECK IS DIRECTLY ATTACHED TO THE BEAM OR WHERE BOLTS WILL INTERFERE WITH JOIST SEATS OR OTHER BEARING CONNECTIONS.
5. BOLTS IN FLANGE SHALL BE SIZED SUCH THAT THE CROSS-SECTIONAL AREA OF THE FLANGE IS NOT REDUCED BY MORE THAN 30%, ANY VARIANCE MUST BE SUBMITTED TO E.O.R. FOR APPROVAL.

ALTERNATE DETAIL
BEAM TO COLUMN FLANGE MOMENT
CONNECTION - BOLTED

1 SCALE: N.T.S.

4.1290

PROFESSIONAL SEAL

Matrix Structural Engineers
TBPE Firm Registration No. F-2640
STATE OF TEXAS
ARNOOL A. KHAYRATTEE
66260
LICENSED PROFESSIONAL ENGINEER

01/14/20

LOGO/CONTACT

MATRIX
STRUCTURAL
ENGINEERS
5177 Richmond Avenue, Suite 670
Houston, TX 77056-2401
Tel: 713.664.0133
Fax: 713.664.1370
MSE - 18134

DESIGN TEAM

Architectural
Martinez Architects

Civil Engineer
Maverick Engineering

Structural
Matrix Structural Engineers

MEP
DBR

Landscaping
KDC Associates

FIRE STATION #5
CITY OF MIDLAND
2200 W GOLF COURSE RD
MIDLAND, TX 79701

PROJECT No: **MA 18017**
DATE: **01/14/2020**

No.	Date	Description
	05/21/19	100% DD
	07/30/19	ISSUE FOR PERMIT
	01/14/20	99% CD

FRAMING DETAILS

S404

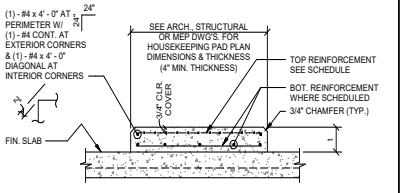

HOUSEKEEPING PAD REINF. SCHEDULE		
PAD THICKNESS	TOP REINFORCEMENT	BOTTOM REINF.
4" (MAX.)	4"x4" - W4.0 x W4.0	NONE

NOTE:
1. GENERAL CONTRACTOR TO DETERMINE REQUIREMENTS FOR HOUSEKEEPING PADS OVER STRUCTURAL SLAB AND PROVIDE WHERE REQUIRED WHETHER SHOWN ON STRUCTURAL DRAWINGS OR NOT. COORDINATE DIMENSIONS AND OTHER SPECIAL REQUIREMENTS WITH EQUIPMENT MANUFACTURERS AS REQUIRED.
2. PAD SHALL NOT BE POURED UNTIL AFTER SLAB HAS REACHED ITS SPECIFIED 28 DAYS STRENGTH.
3. CONCRETE FOR HOUSEKEEPING PAD SHALL BE LIGHTWEIGHT CONCRETE WITH f'c = 3,000 psi

TYPICAL DETAIL
CONCRETE ISLAND OR HOUSEKEEPING PAD
SECOND FLOOR

12 SCALE: N.T.S.

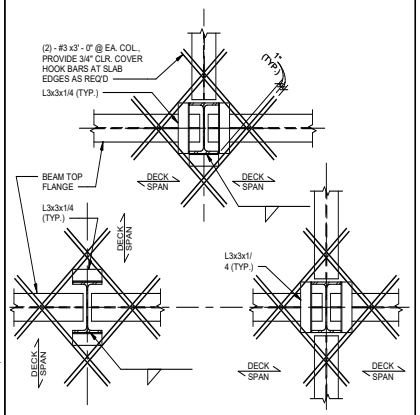

TYPICAL DETAIL
METAL DECK SUPPORT AT STEEL COLUMNS

9 SCALE: N.T.S.

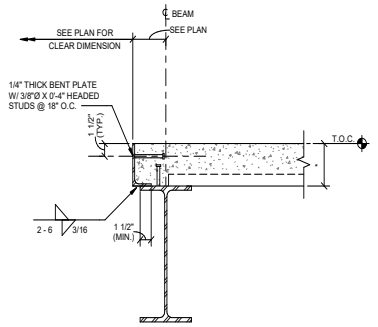

NOTE:
1. SEE PLAN FOR DECK DIRECTION.
2. REFER TO STAIR DRAWINGS FOR CONNECTION OF STAIR STRINGERS TO BEAM.
3. * : SEE PLAN NOTES.

TYPICAL DETAIL
STEEL STAIR FLOOR LANDING
COMPOSITE METAL DECK

6 SCALE: N.T.S.

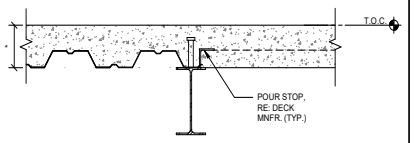

NOTE:
1. * : SEE PLAN NOTES.

TYPICAL DETAIL
CHANGE IN DECK DIRECTION IN
COMPOSITE METAL DECK

3 SCALE: N.T.S.

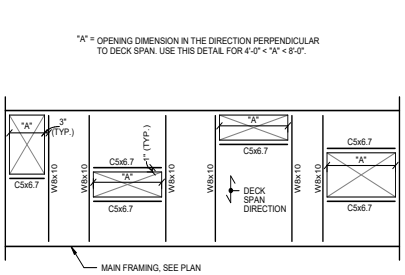

NOTES :
1. COORDINATE OPENING SIZE AND LOCATIONS WITH ARCHITECTURAL AND MECHANICAL DRAWINGS.
2. THIS DETAIL SHOWS TYPICAL CONFIGURATIONS. VERIFY WITH STRUCTURE ENGINEER FOR SPECIAL CASES.
3. REFER TO STRUCTURAL ENGINEER FOR FRAMING IF DIMENSION "A" EXCEEDS 8'-0".
4. DECK MANUFACTURER TO PROVIDE 14 GAGE METAL EDGE CLOSURE AROUND EACH OPENING UNLESS DETAILED OTHERWISE.

TYPICAL DETAIL
FRAMED OPENINGS IN COMPOSITE
METAL DECK SLAB FLOOR OR ROOF

11 SCALE: N.T.S.

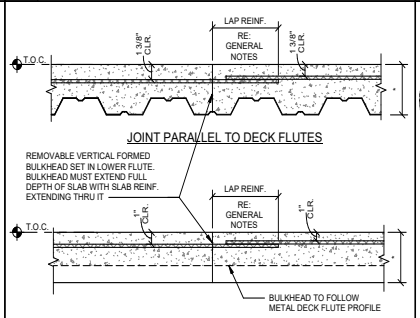

NOTES:
1. CONSTRUCTION JOINTS PARALLEL TO DECK FLUTES SHALL BE LOCATED NO CLOSER THAN 5' - 0" FROM THE CENTERLINE OF THE NEAREST GIRDER.
2. CONSTRUCTION JOINTS PERPENDICULAR TO DECK FLUTES SHALL BE LOCATED AT THE CENTER OF THE METAL DECK SPAN.
3. * : SEE PLAN NOTES.

TYPICAL DETAIL
CONSTRUCTION JOINT
CONCRETE SLAB ON METAL DECK

8 SCALE: N.T.S.

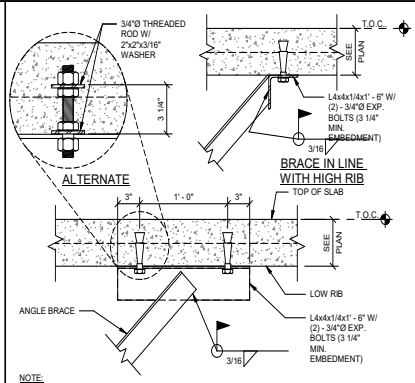

NOTE:
LOCATE EXPANSION BOLTS IN CENTER OF DECK FLUTE

BRACE IN LINE WITH LOW RIB

TYPICAL DETAIL
BRACE CONNECTION TO SLAB

5 SCALE: N.T.S.

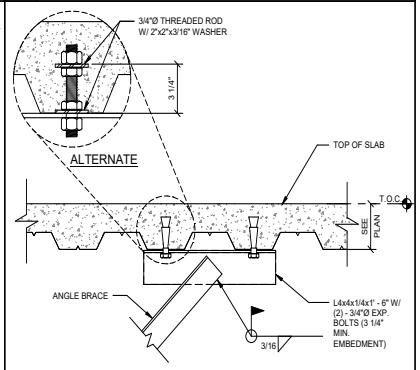

NOTE:
LOCATE EXPANSION BOLTS IN CENTER OF DECK FLUTE

TYPICAL DETAIL
BRACE CONNECTION TO SLAB

2 SCALE: N.T.S.

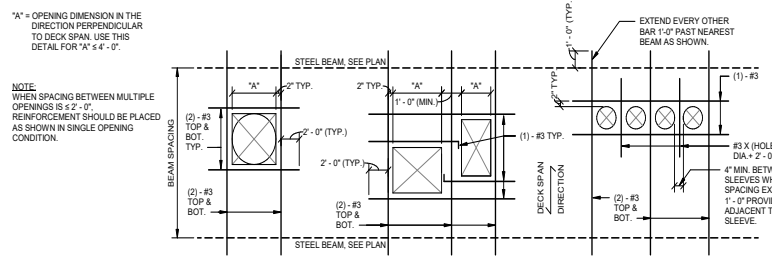

NOTE:
WHEN SPACING BETWEEN MULTIPLE OPENINGS IS ≤ 2' - 0", REINFORCEMENT SHOULD BE PLACED AS SHOWN IN SINGLE OPENING CONDITION.

SINGLE OPENING MULTIPLE OPENINGS PIPE SLEEVES

NOTES:
1. COORDINATE OPENING SIZE AND LOCATIONS WITH ARCHITECTURAL AND MECHANICAL DRAWINGS.
2. MAXIMUM DIMENSION "A" SHALL BE 4'-0". REFER TO PLAN OR DETAIL ON DRAWINGS FOR FRAMING OF OPENINGS GREATER THAN 4' - 0".
3. WWF SLAB REINFORCEMENT SHALL BE CUT AROUND OPENING. WWF SHALL EXTEND TO WITHIN 2" OF OPENING ON ALL SIDES.
4. OPENINGS 10" AND SMALLER DO NOT REQUIRE ADDITIONAL REINFORCEMENT.
5. FIELD CUT OPENINGS IN DECK AFTER CONCRETE SLAB HAS BEEN POURED AND HAS ATTAINED MINIMUM OF 75% OF ITS SPECIFIED 28-DAY COMPRESSIVE STRENGTH.
6. REINFORCEMENT PERPENDICULAR TO DECK SPAN SHALL BE PLACED ON TOP OF DECK FLUTES.
7. REINFORCEMENT PARALLEL TO DECK SPAN SHALL BE PLACED IN THE LOWER FLUTE AND SHALL BE CHAIRED TO PROVIDE 3/4" COVER.
8. THIS DETAIL SHOWS TYPICAL CONDITIONS. VERIFY REINFORCING STEEL PLACEMENT WITH ENGINEER FOR SPECIAL CASES.
9. PROVIDE REINFORCEMENT AS SHOWN FOR SQUARE, RECTANGULAR AND ROUND OPENINGS.

TYPICAL DETAIL
OPENINGS IN COMPOSITE METAL DECK SLAB, FLOOR OR ROOF

10 SCALE: N.T.S.

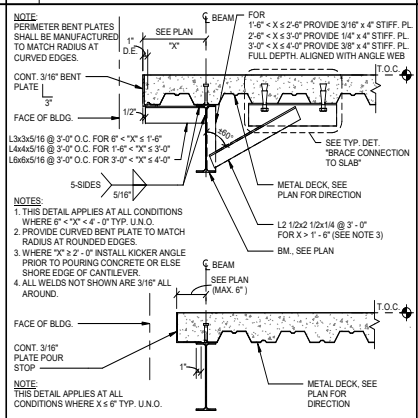

TYPICAL DETAIL
EDGE DETAIL - EXTERIOR
COMPOSITE METAL DECK

4 SCALE: 1" = 1'-0"

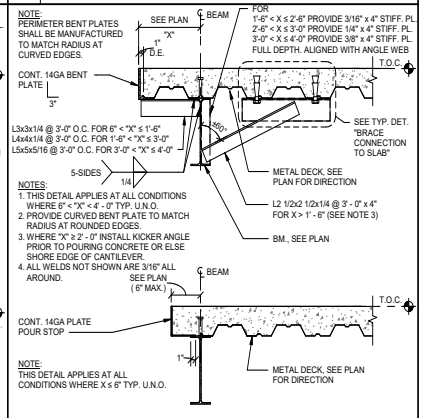

TYPICAL DETAIL
EDGE DETAIL - INTERIOR
COMPOSITE METAL DECK

1 SCALE: N.T.S.

4.1291

PROFESSIONAL SEAL
Matrix Structural Engineers
TBPE Firm Registration No. F-2640
STATE OF TEXAS
ARNOLD A. KWAYSBATTEE
66260
LICENSED PROFESSIONAL ENGINEER
01/14/20

LOGO/CONTACT
MATRIX STRUCTURAL ENGINEERS
5177 Richmond Avenue, Suite 670
Houston, TX 77056-2401
Tel: 713.664.0133
Fax: 713.664.1370
MSE - 18134

DESIGN TEAM
Architectural
Martinez Architects
Civil Engineer
Maverick Engineering
Structural
Matrix Structural Engineers
MEP
DBR
Landscaping
KDC Associates

FIRE STATION #5
CITY OF MIDLAND
2200 W GOLF COURSE RD
MIDLAND, TX 79701

PROJECT No: **MA 18017**
DATE: **01/14/2020**

No.	Date	Description
	05/21/19	100% DD
	07/30/19	ISSUE FOR PERMIT
	01/14/20	99% CD

COMPOSITE
FLOOR DETAILS

S501

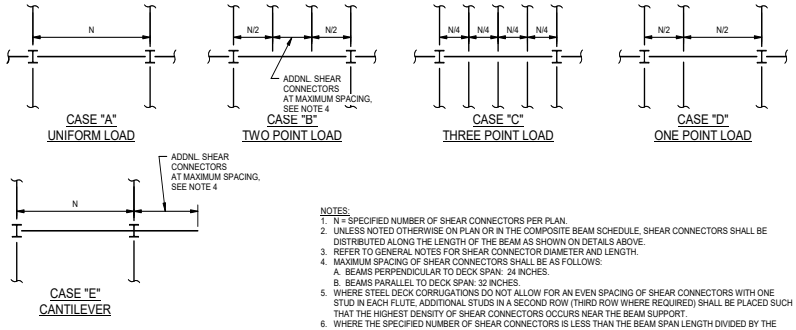

NOTES:
1. N = SPECIFIED NUMBER OF SHEAR CONNECTORS PER PLAN.
2. UNLESS NOTED OTHERWISE ON PLAN OR IN THE COMPOSITE BEAM SCHEDULE, SHEAR CONNECTORS SHALL BE DISTRIBUTED ALONG THE LENGTH OF THE BEAM AS SHOWN ON DETAILS ABOVE.
3. REFER TO GENERAL NOTES FOR SHEAR CONNECTOR DIAMETER AND LENGTH.
4. MAXIMUM SPACING OF SHEAR CONNECTORS SHALL BE AS FOLLOWS:
   A. BEAMS PERPENDICULAR TO DECK SPAN: 24 INCHES.
   B. BEAMS PARALLEL TO DECK SPAN: 32 INCHES.
5. WHERE STEEL DECK CORRUGATIONS DO NOT ALLOW FOR AN EVEN SPACING OF SHEAR CONNECTORS WITH ONE STUD IN EACH FLUTE, ADDITIONAL STUDS IN A SECOND ROW (THIRD ROW WHERE REQUIRED) SHALL BE PLACED SUCH THAT THE HIGHEST DENSITY OF SHEAR CONNECTORS OCCURS NEAR THE BEAM SUPPORT.
6. WHERE THE SPECIFIED NUMBER OF SHEAR CONNECTORS IS LESS THAN THE BEAM SPAN LENGTH DIVIDED BY THE MAXIMUM SPACING (SEE NOTE 4), ADDITIONAL SHEAR CONNECTORS SHALL BE PROVIDED SUCH THAT THE MAXIMUM SPACING IS NOT EXCEEDED AT ANY LOCATION IN THE SPAN.
7. SUBMIT SHOP DRAWINGS SHOWING PLACEMENT OF SHEAR CONNECTORS FOR ENGINEER'S APPROVAL.

TYPICAL DETAIL
SHEAR CONNECTOR PLACEMENT DIAGRAMS COMPOSITE METAL DECK

12 SCALE: N.T.S.

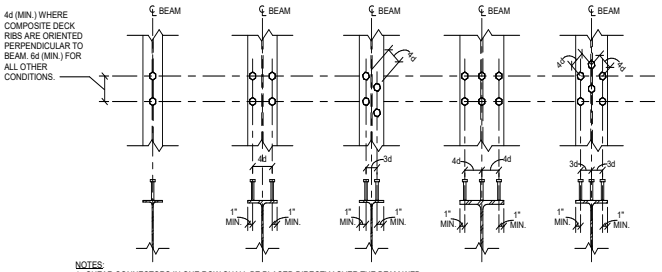

NOTES:
1. SHEAR CONNECTORS IN ONE ROW SHALL BE PLACED DIRECTLY OVER THE BEAM WEB.
2. PLACE STUDS IN A SINGLE ROW WHERE SPACING REQUIREMENTS PERMIT. STUDS SHALL BE PLACED IN TWO ROWS OR THREE ROWS ONLY WHERE REQUIRED IN ORDER TO PLACE THE TOTAL NUMBER OF STUDS. SEE TYPICAL DETAIL, "SHEAR CONNECTOR PLACEMENT DIAGRAMS COMPOSITE METAL DECK".
3. PROVIDE MINIMUM 1" SPACING FROM EDGE OF FLANGE TO CENTERLINE OF STUD.
4. SUBMIT SHOP DRAWINGS SHOWING PLACEMENT OF SHEAR CONNECTORS FOR ENGINEER'S APPROVAL.
5. D - INDICATES STUD SHAFT DIAMETER.
6. IF THE STEEL BEAM FLANGE IS NARROW, SPACING REQUIREMENTS MAYBE MET BY STAGGERING STUDS AS SHOWN.
7. SPACINGS SHOWN ARE MINIMUM AND MAY BE EXCEEDED WHERE SPACE IS AVAILABLE. SEE TYPICAL DETAIL "SHEAR CONNECTOR PLACEMENT DIAGRAMS ON COMPOSITE METAL DECK" FOR ADDITIONAL INFO.

TYPICAL DETAIL
SHEAR CONNECTOR SPACING CRITERIA

6 SCALE: N.T.S.

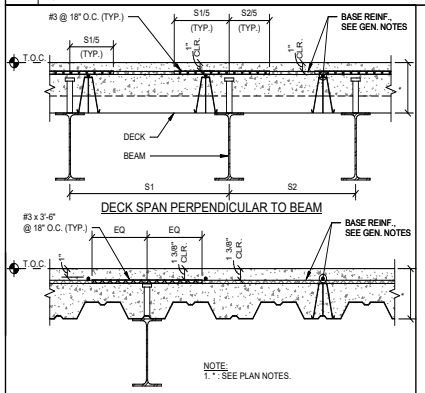

TYPICAL DETAIL
ADDITIONAL REBAR FOR
CONCRETE ON STEEL DECK

11 SCALE: N.T.S.

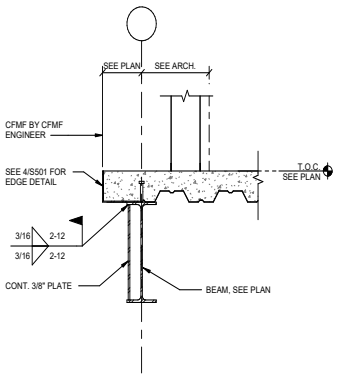

EDGE DETAIL AT RAPPELLING LEVEL

8 SCALE: 1" = 1'-0"

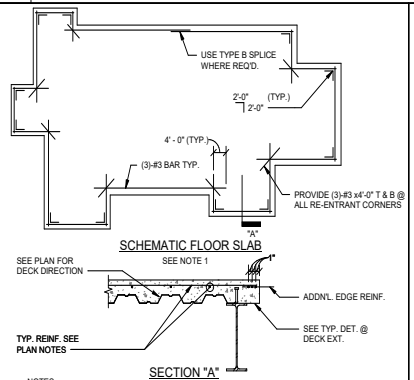

NOTES:
1. THIS DRAWING IS INTENDED AS A SCHEMATIC ONLY. SEE PLANS FOR ACTUAL SLAB LAYOUT.
2. TYPICAL REINFORCING PARALLEL TO EDGE REINF. SHALL START 6" FROM EDGE REBAR.
3. ADDITIONAL BARS NEED ONLY BE PROVIDED AT OPENINGS LARGER THAN 4'-0" WIDE.

TYPICAL DETAIL
REINFORCING AT SLAB EDGE

5 SCALE: N.T.S.

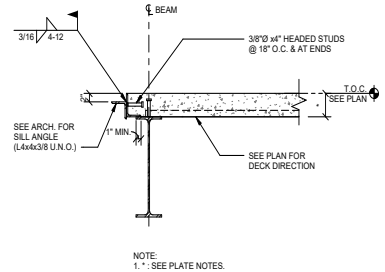

NOTE:
1. * : SEE PLATE NOTES.

TYPICAL DETAIL
ELEVATOR SILL AT DOOR

2 SCALE: N.T.S.

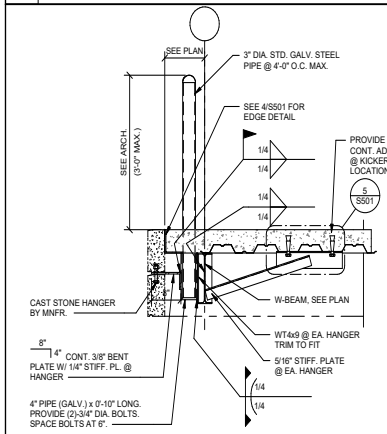

10 SCALE: 3/4" = 1'-0"

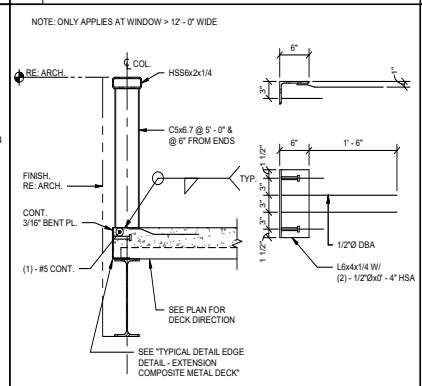

TYPICAL DETAIL
SUPPORT AT ELEVATED WINDOW

7 SCALE: N.T.S.

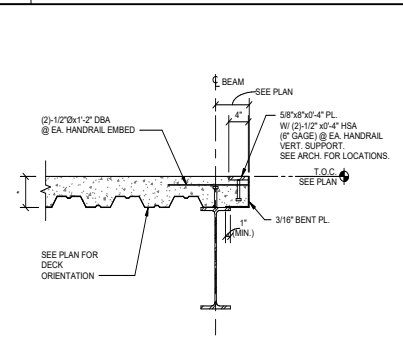

NOTES:
1. HANDRAIL AND THEIR ATTACHMENT BY HANDRAIL SUPPLIER.
2. SLAB REINF. NOT SHOWN FOR CLARITY.
3. SEE TYPICAL SLAB EDGE DETAILS FOR INFORMATION NOT NOTED.
4. SEE ARCH/TECTURAL FOR EXACT LOCATIONS.
5. * : SEE PLAN NOTES.

TYPICAL DETAIL
EMBED AT HANDRAIL SUPPORT

4 SCALE: N.T.S.

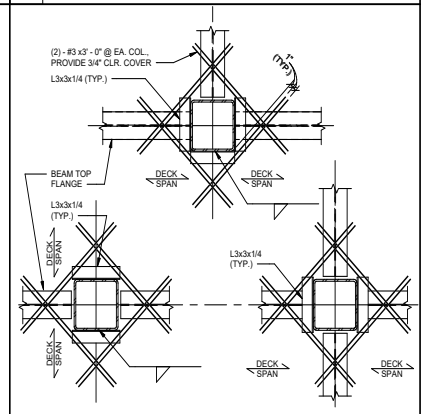

TYPICAL DETAIL
METAL DECK SUPPORT AT STEEL COLUMNS

1 SCALE: N.T.S.

PROFESSIONAL SEAL
Matrix Structural Engineers
TBPE Firm Registration No. F-2640
STATE OF TEXAS
ARNOLD A. KWAYSBATTEE
66260
REGISTERED PROFESSIONAL ENGINEER
01/14/20

LOGO/CONTACT
MATRIX STRUCTURAL ENGINEERS
5177 Richmond Avenue, Suite 670
Houston, TX 77056-2401
Tel: 713.664.0133
Fax: 713.664.1370
MSE - 18134

DESIGN TEAM
Architectural
Martinez Architects
Civil Engineer
Maverick Engineering
Structural
Matrix Structural Engineers
MEP
DBR
Landscaping
KDC Associates

FIRE STATION #5
CITY OF MIDLAND
2200 W GOLF COURSE RD
MIDLAND, TX 79701

PROJECT No: **MA 18017**
DATE: **01/14/2020**

No.	Date	Description
	05/21/19	100% DD
	07/30/19	ISSUE FOR PERMIT
	01/14/20	99% CD

COMPOSITE FLOOR DETAILS

S502

4.1292

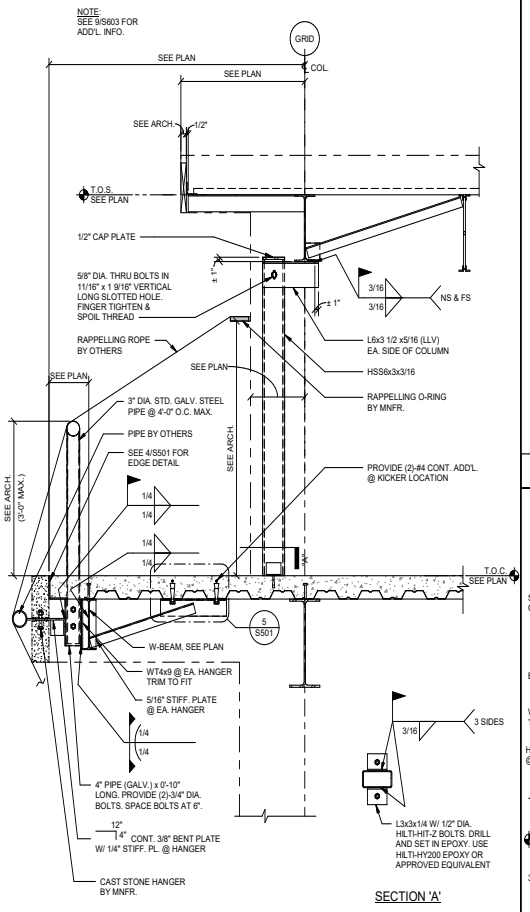

11 TYPICAL DETAIL AT HANDRAIL AT RAPPELLING LEVEL

SCALE: 3/4" = 1'-0"

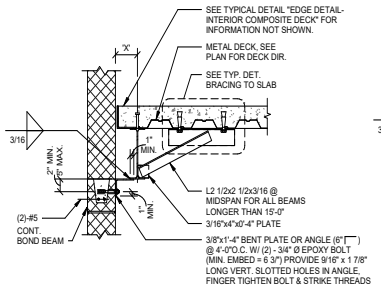

TYPICAL DETAIL
TALL INTERIOR NON-LOAD BEARING CMU WALL BRACING AT FLOOR LINE

9 SCALE: 3/4" = 1'-0"

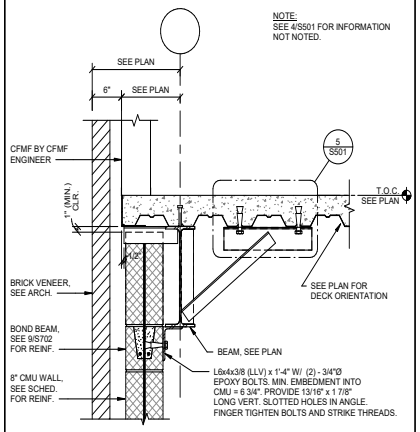

3 EDGE DETAIL AT CMU WALL

SCALE: 1" = 1'-0"

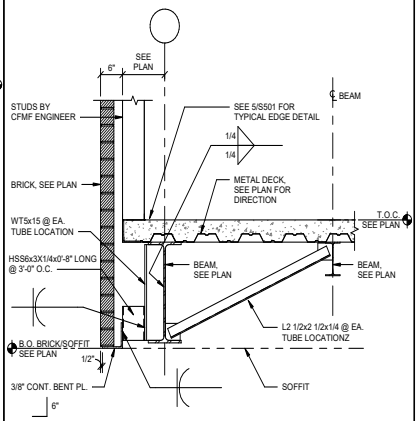

8 EDGE DETAIL AT CARRIED BRICK

SCALE: 3/4" = 1'-0"

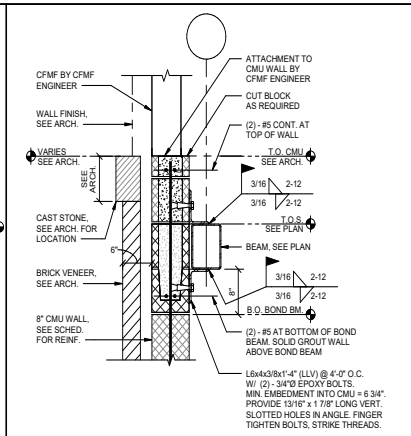

5 STEEL TUBE AT CMU WALL

SCALE: 1" = 1'-0"

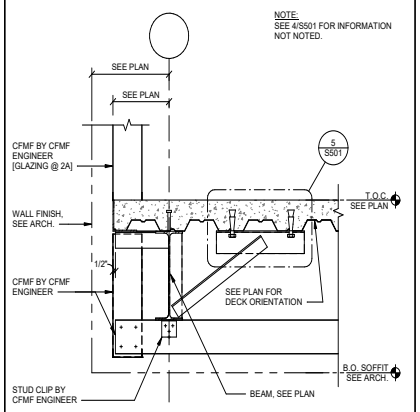

2A EDGE DETAIL AT STUD WALL/GLAZING

SCALE: 1" = 1'-0"

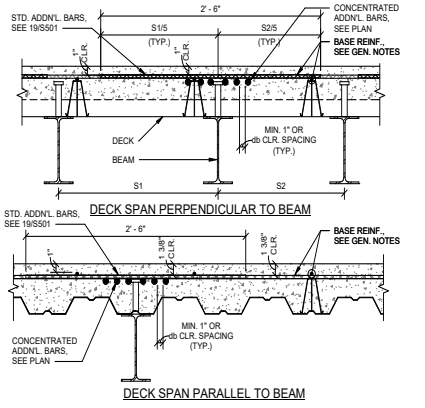

10 TYPICAL DETAIL ADDITIONAL REBAR FOR CONCRETE ON STEEL DECK

SCALE:N.T.S.

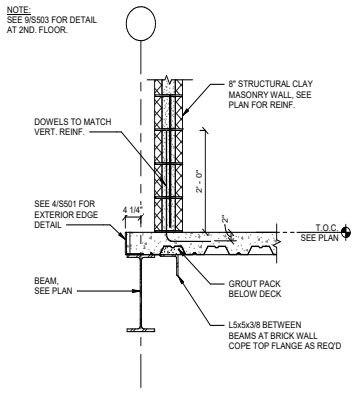

7 MEZZANINE DETAIL AT STRUCTURAL BRICK WALL

SCALE: 3/4" = 1'-0"

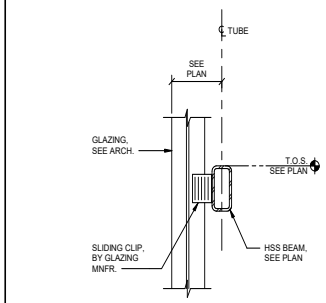

4 TYPICAL DETAIL GLAZING AT SLAB OPENING

SCALE: 1" = 1'-0"

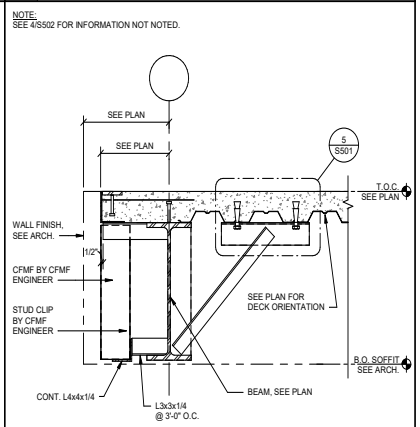

1 DETAIL AT HANDRAIL SUPPORT AT BALCONY

SCALE: 1" = 1'-0"

4.1293

PROFESSIONAL SEAL

Matrix Structural Engineers
TBPE Firm Registration No. F-2640

STATE OF TEXAS
ARNOLD A. KWAYSBATTEE
66260
LICENSED PROFESSIONAL ENGINEER

01/14/20

LOGO/CONTACT

MATRIX STRUCTURAL ENGINEERS

5177 Richmond Avenue, Suite 670
Houston, TX 77046-2401
Tel: 713.664.0133
Fax: 713.664.1370
MSE - 18134

DESIGN TEAM

Architectural
Martinez Architects

Civil Engineer
Maverick Engineering

Structural
Matrix Structural Engineers

MEP
DBR

Landscaping
KDC Associates

FIRE STATION #5
CITY OF MIDLAND
2200 W GOLF COURSE RD
MIDLAND, TX 79701

PROJECT No: **MA 18017**
DATE: **01/14/2020**

No.	Date	Description
	05/21/19	100% DD
	07/30/19	ISSUE FOR PERMIT
	01/14/20	99% CD

COMPOSITE FLOOR DETAILS

S503

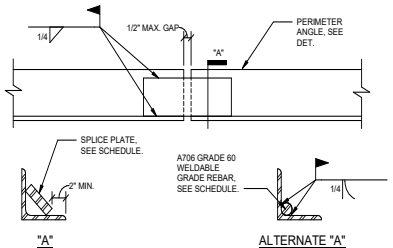

PERIMETER ANGLE	SPLICE MEMBER		LENGTH
	PLATE	REBAR	L(INCH)
L3x3x1/4	1/2x2 3/4	#7 BAR	9"
L4x4x1/4	1/2x4	#9 BAR	12"
L4x4x5/16	1/2x4	#9 BAR	12"

TYPICAL DETAIL
SPLICE AT PERIMETER ROOF ANGLE

12 SCALE: N.T.S.

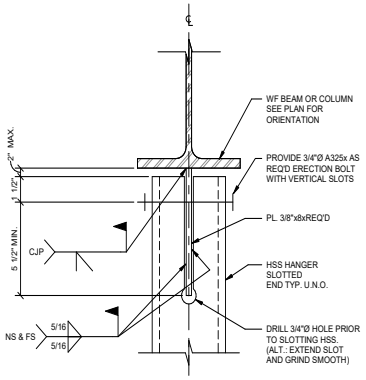

TYPICAL
TUBE HANGER DETAIL

9 SCALE: N.T.S.

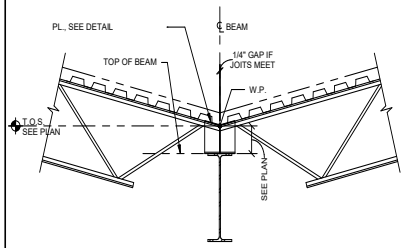

TYPICAL DETAIL
AT VALLEY

6 SCALE: N.T.S.

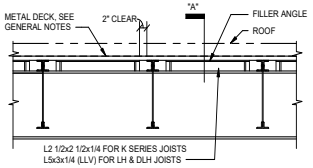

ELEVATION

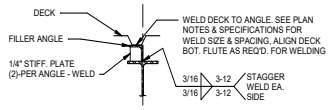

SECTION "A" AT LOW-SLOPED ROOFS

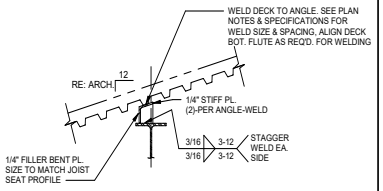

SECTION "A" AT STEEP-SLOPED ROOFS

NOTE:
1. PROVIDE FILLER ANGLES AT BEAMS WITH DIAGONAL BRACES OR MOMENT CONNECTIONS.
2. INCREASE SIZE OR PROVIDE BENT PLATES TO FILL GAP WHERE REQUIRED TO MATCH JOIST SEATS.

TYPICAL DETAIL
OPEN WEB STEEL JOIST DECK DIAPHRAGM
CONNECTION TO STEEL BEAM

2 SCALE: N.T.S.

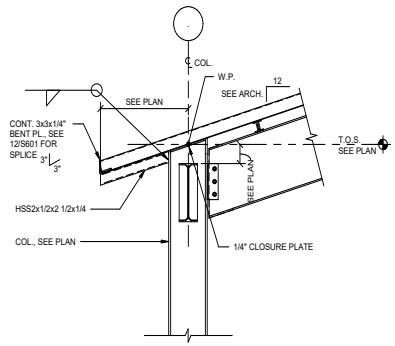

TYPICAL DETAIL
ROOF EDGE AT COLUMN
WITH W-BEAM PERPENDICULAR

11 SCALE: N.T.S.

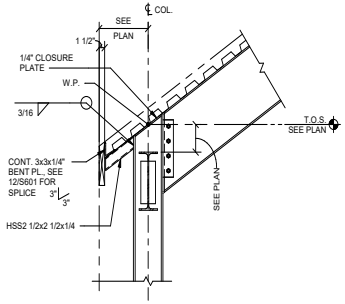

TYPICAL DETAIL
ROOF EDGE AT COLUMN
WITH W-BEAM PERPENDICULAR

8 SCALE: N.T.S.

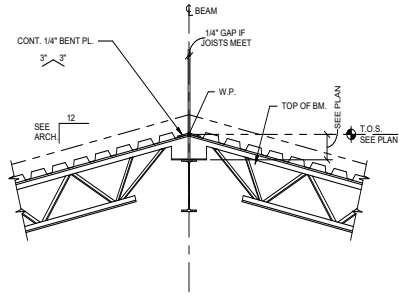

TYPICAL DETAIL
AT RIDGE

5 SCALE: N.T.S.

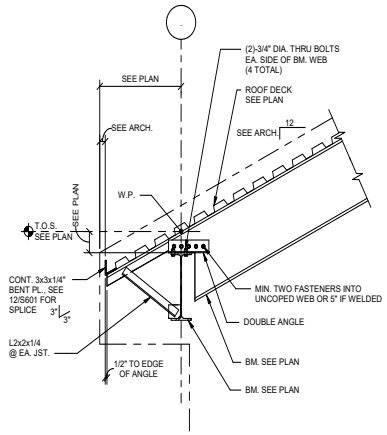

10 SCALE: N.T.S.

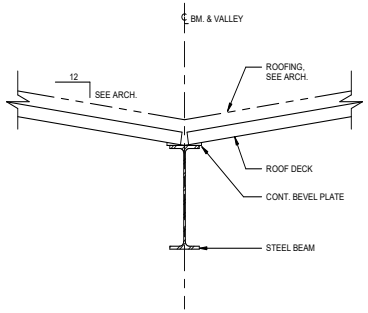

7 SCALE: N.T.S.

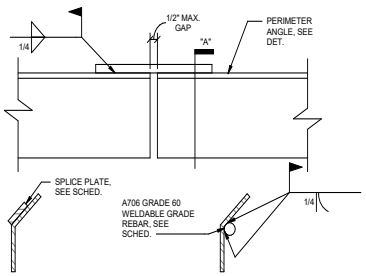

PERIMETER PLATE	SPLICE MEMBER		LENGTH
	PLATE	REBAR	L (INCH)
L3x3x1/4 BENT PL.	1/2x2 3/4	#7 BAR	9"
L4x4x1/4 BENT PL.	1/2x4	#9 BAR	12"

TYPICAL DETAIL
SPLICE AT PERIMETER ROOF PLATE

4 SCALE: N.T.S.

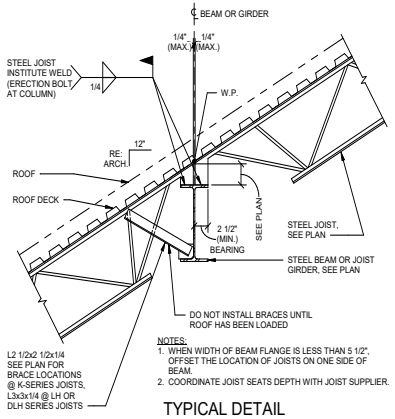

NOTES:
1. WHEN WIDTH OF BEAM FLANGE IS LESS THAN 5 1/2", OFFSET THE LOCATION OF JOISTS ON ONE SIDE OF BEAM.
2. COORDINATE JOIST SEATS DEPTH WITH JOIST SUPPLIER.

TYPICAL DETAIL
OPEN WEB STEEL JOIST
AT INTERIOR STEEL BEAM, SLOPED ROOF

1 SCALE: N.T.S.

4.1294

PROFESSIONAL SEAL

Matrix Structural Engineers
TBPE Firm Registration No. F-2640

01/14/20

LOGO/CONTACT

MATRIX
STRUCTURAL
ENGINEERS

5177 Richmond Avenue, Suite 670
Houston, TX 77046-2401
Tel: 713.664.0133
Fax: 713.664.1370
MSE - 18134

DESIGN TEAM

Architectural
Martinez Architects

Civil Engineer
Maverick Engineering

Structural
Matrix Structural Engineers

MEP
DBR

Landscaping
KDC Associates

FIRE STATION #5

CITY OF MIDLAND
2200 W GOLF COURSE RD
MIDLAND, TX 79701

PROJECT No: **MA 18017**
DATE: **01/14/2020**

No.	Date	Description
	05/21/19	100% DD
	07/30/19	ISSUE FOR PERMIT
	01/14/20	99% CD

ROOF FRAMING DETAILS

S601

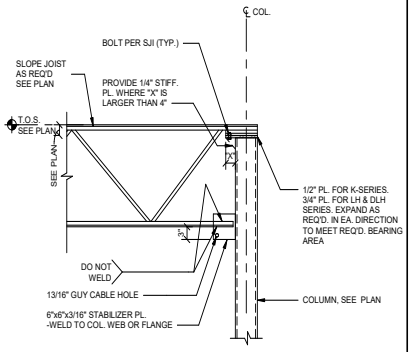

NOTES:
1. COORDINATE JOIST SEAT DEPTHS WITH JOIST SUPPLIER.
2. PER OSHA STANDARDS WHERE STEEL JOISTS ARE USED & COLUMNS ARE NOT FRAMED IN AT LEAST TWO DIRECTIONS WITH SOLID WEB STRUCTURAL STEEL MEMBERS, STEEL JOIST SHALL BE FIELD BOLTED TO COLUMN.
3. DIMENSION "X" SHALL BE DETERMINED BY JOIST MANUFACTURER.

TYPICAL DETAIL
JOIST SEAT AT TUBE COLUMN

9 SCALE: N.T.S.

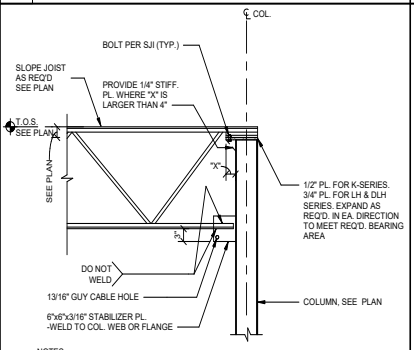

NOTES:
1. COORDINATE JOIST SEAT DEPTHS WITH JOIST SUPPLIER.
2. PER OSHA STANDARDS WHERE STEEL JOISTS ARE USED & COLUMNS ARE NOT FRAMED IN AT LEAST TWO DIRECTIONS WITH SOLID WEB STRUCTURAL STEEL MEMBERS, STEEL JOIST SHALL BE FIELD BOLTED TO COLUMN.
3. DIMENSION "X" SHALL BE DETERMINED BY JOIST MANUFACTURER.

TYPICAL DETAIL
JOIST SEAT AT WF COLUMN

8 SCALE: N.T.S.

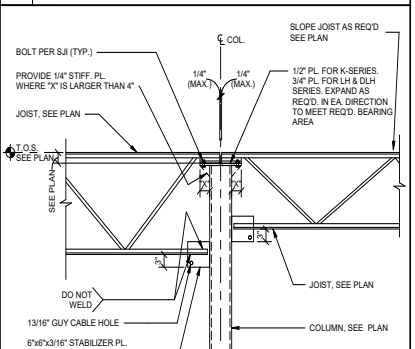

NOTES:
1. COORDINATE JOIST SEAT DEPTHS WITH JOIST SUPPLIER.
2. PER OSHA STANDARDS WHERE STEEL JOISTS ARE USED & COLUMNS ARE NOT FRAMED IN AT LEAST TWO DIRECTIONS WITH SOLID WEB STRUCTURAL STEEL MEMBERS, STEEL JOIST SHALL BE FIELD BOLTED TO COLUMN.
3. DIMENSION "X" SHALL BE DETERMINED BY JOIST MANUFACTURER.

TYPICAL DETAIL
JOIST SEAT AT TUBE COLUMN

7 SCALE: N.T.S.

NOTE:
1. COORDINATE JOIST SEAT DEPTHS WITH JOIST SUPPLIER.
2. DETAIL SHALL BE SIMILAR AT SLOPED ROOF.

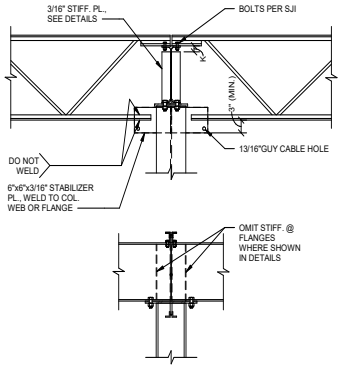

JOISTS DEEPER THAN BEAM

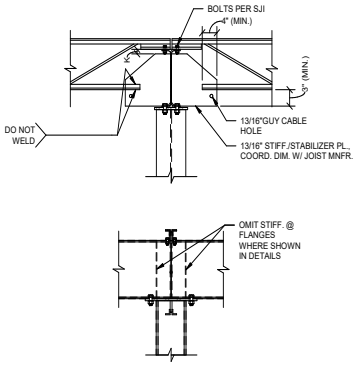

BEAM DEEPER THAN JOISTS

TYPICAL DETAIL
JOIST AT CONTINUOUS BEAM OVER COLUMN

4 SCALE: N.T.S.

NOTE:
METAL DECK AND JOIST OMITTED FOR CLARITY

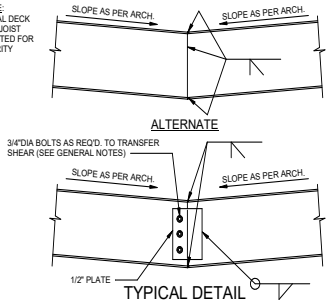

TYPICAL DETAIL
BROKEN BACK BEAM (MOMENT CONNECTION)

3 SCALE: N.T.S.

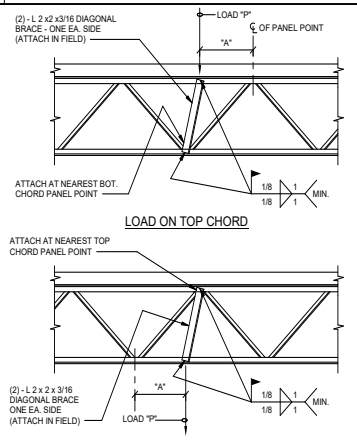

NOTES:
1. DIAGONAL BRACE IS NOT REQUIRED FOR "A" LESS THAN 3".
2. PROVIDE DIAGONAL BRACE AT LOCATION OF CONCENTRATED LOADS SUCH AS HEAVY PIPES, MECHANICAL UNITS, HEAVY LIGHTS AND ANY OTHER CONCENTRATED LOADS AS DIRECTED BY ENGINEER.
3. P = CONCENTRATED LOAD.

TYPICAL DETAIL
STIFFENING OF STEEL JOIST FOR CONCENTRATED LOADS

2 SCALE: N.T.S.

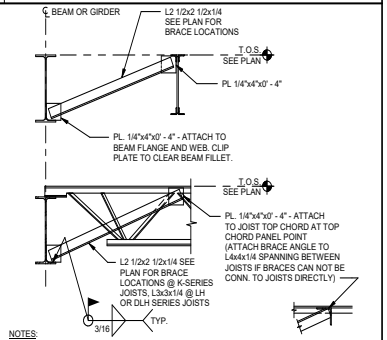

NOTES:
1. SEE PLAN/DETAILS FOR LOCATIONS OF ANGLE BRACES.
2. FIELD WELDING OF 1/4" CONNECTION PLATES SHALL BE AT FABRICATOR'S OPTION.
3. ALL BRACING SHALL BE IN PLACE AND WELDED BEFORE DECK INSTALLATION.
4. BRACE SIZES SHOWN ARE TYPICAL UNLESS NOTED OTHERWISE ON PLAN.
5. SEE GENERAL NOTES FOR DECK CONSTRUCTION.

TYPICAL DETAIL
BEAM BOTTOM FLANGE BRACE JOIST CONSTRUCTION

1 SCALE: N.T.S.

PROFESSIONAL SEAL

Matrix Structural Engineers
TBPE Firm Registration No. F-2640

01/14/20

LOGO/CONTACT

MATRIX STRUCTURAL ENGINEERS

5177 Richmond Avenue, Suite 670
Houston, TX 77056-2401
Tel: 713.664.0133
Fax: 713.664.1370
MSE - 18134

DESIGN TEAM

Architectural
Martinez Architects

Civil Engineer
Maverick Engineering

Structural
Matrix Structural Engineers

MEP
DBR

Landscaping
KDC Associates

FIRE STATION #5

CITY OF MIDLAND
2200 W GOLF COURSE RD
MIDLAND, TX 79701

PROJECT No: **MA 18017**
DATE: **01/14/2020**

No.	Date	Description
	05/21/19	100% DD
	07/30/19	ISSUE FOR PERMIT
	01/14/20	99% CD

ROOF FRAMING DETAILS

S602

4.1295

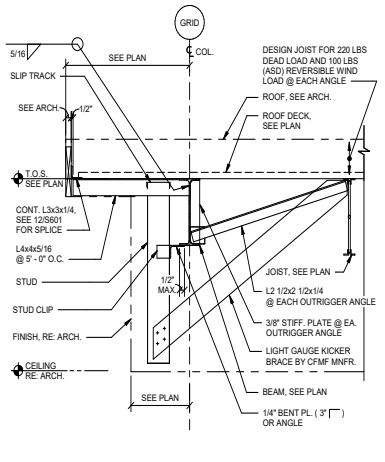

12 ROOF FRAMING DETAIL 2

SCALE: 3/4" = 1'-0"

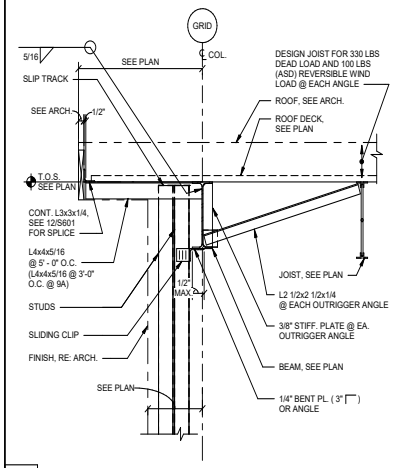

9A

9 ROOF FRAMING DETAIL

SCALE: 3/4" = 1'-0"

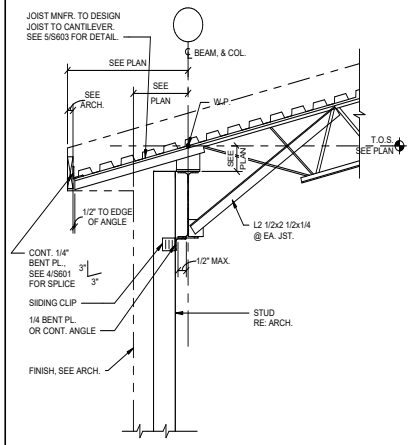

6 TYPICAL DETAIL
SLOPED OPEN WEB JOIST AT ROOF EDGE

SCALE: 3/4" = 1'-0"

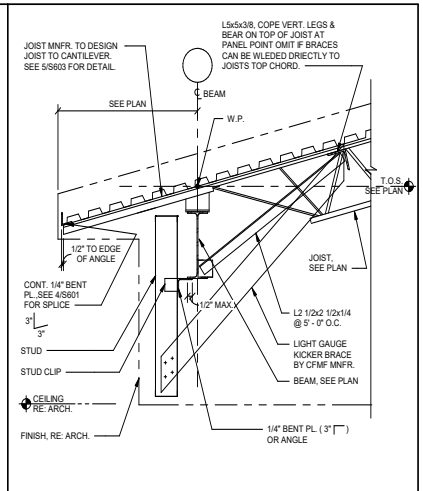

3 TYPICAL DETAIL
SLOPED OPEN WEB JOIST AT ROOF EDGE

SCALE: 3/4" = 1'-0"

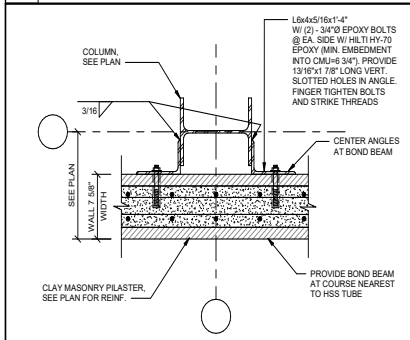

11 CLAY MASONRY WALL TO COLUMN CONNECTION1

SCALE: 1 1/2" = 1'-0"

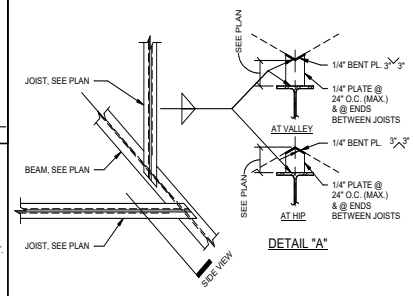

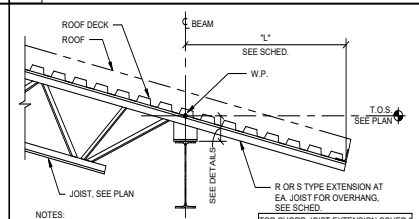

NOTES:
1. CONTRACTOR/JOIST MNFR. MAY CHOOSE EITHER TYPE JOIST EXTENSION SHOWN (OR LARGER) FOR "L" ≤ MAX. "L" SHOWN.
2. FOR ANY "L" JOIST, MNFR. MAY DESIGN JOIST EXTENSION FOR THE FOLLOWING CRITERIA IN LIEU OF SIZE SHOWN, U.N.O.:
TL = 240 PLF
TOTAL DEFLECTION ≤ 2 x "L" / 240
LL = 120 PLF
LIVE LOAD DEFLECTION < 2 x "L" / 360
MNFR. SHALL ACCOUNT FOR SKIP LOADING OF LIVE LOADS.
3. LOADS ON JOIST EXTENSIONS SHOWN ON PLAN OR IN DETAILS SHALL BE IN ADDITION TO THOSE SHOWN HERE. DEFLECTION CRITERIA SHALL REMAIN THE SAME AS SHOWN ABOVE. THE SCHEDULE SHOWN HERE DOES NOT APPLY WHERE ADDITIONAL LOADS ARE SHOWN.

TOP CHORD JOIST EXTENSION SCHED.*		
MAX. "L"	R-TYPE	S-TYPE
≤ 1' - 6"	R1	S3
2' - 0"	R1	S7
2' - 6"	R1	S10
3' - 0"	R1	S12
3' - 6"	R1	N/A
4' - 0"	R3	N/A
4' - 6"	R8	N/A
5' - 0"	R11	N/A
≥ 5' - 6"	DESIGN SPECIAL EXTENSION	

*CONTRACTOR/FABRICATOR MAY CHOOSE EITHER TYPE JOIST EXTENSION FOR "L" ≤ MAX. "L" SHOWN

5 TYPICAL DETAIL
K-JOIST EXTENSION SCHEDULE

SCALE: N.T.S.

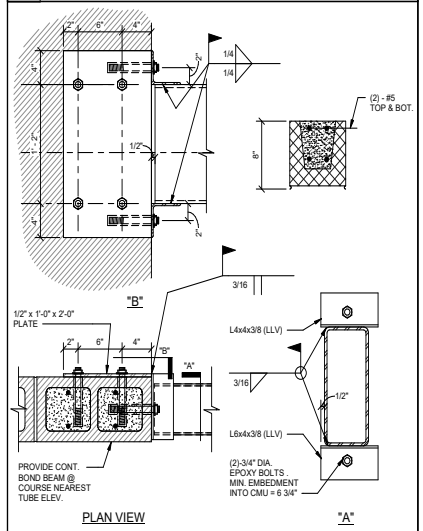

10 HSS TUBE AT CLAY MASONRY WALL

SCALE: 1 1/2" = 1'-0"

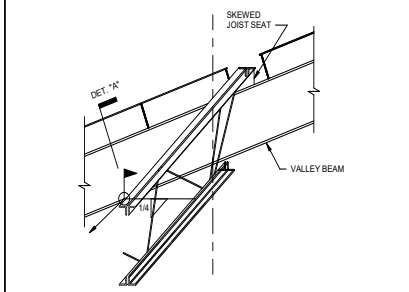

7 DETAIL AT HIP AND VALLEY

SCALE: N.T.S.

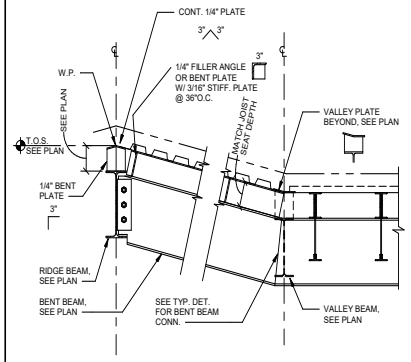

4 TYPICAL DETAIL
CHANGE IN DECK DIRECTION AT BENT BEAM

SCALE: N.T.S.

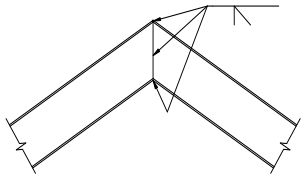

1 TYPICAL DETAIL
BENT BEAM

SCALE: N.T.S.

4.1296

PROFESSIONAL SEAL

Matrix Structural Engineers
TBPE Firm Registration No. F-2640

01/14/20

LOGO/CONTACT

MATRIX STRUCTURAL ENGINEERS

5177 Richmond Avenue, Suite 670
Houston, TX 77046-2401
Tel: 713.664.0133
Fax: 713.664.1370
MSE - 18134

DESIGN TEAM

Architectural
Martinez Architects

Civil Engineer
Maverick Engineering

Structural
Matrix Structural Engineers

MEP
DBR

Landscaping
KDC Associates

FIRE STATION #5

CITY OF MIDLAND
2200 W GOLF COURSE RD
MIDLAND, TX 79701

PROJECT No: **MA 18017**
DATE: **01/14/2020**

No.	Date	Description
	05/21/19	100% DD
	07/30/19	ISSUE FOR PERMIT
	01/14/20	99% CD

ROOF FRAMING DETAILS

S603

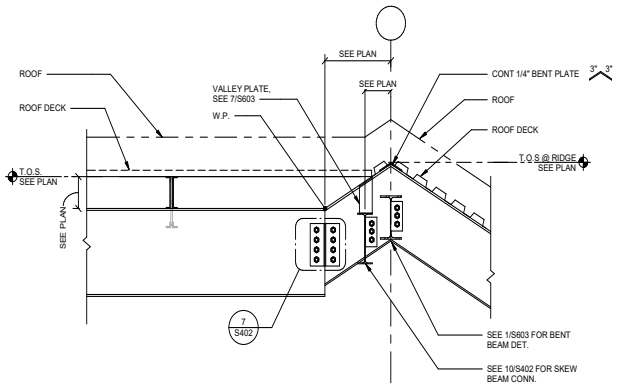

9 CANTILEVER RDGE BEAM TO BENT BEAM CONNECTION

SCALE: 3/4" = 1'-0"

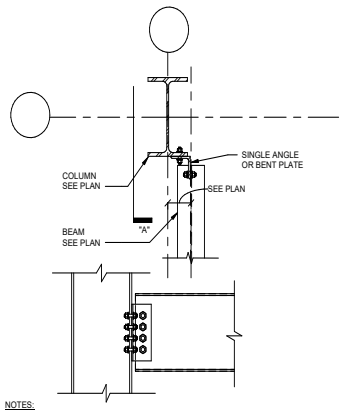

NOTES:
1. DOUBLE ANGLES MAY BE SHOP WELDED TO THE BEAM AND FIELD BOLTED TO THE COLUMN AT CONTRACTOR'S OPTION.
2. REFER TO GENERAL NOTES FOR BEAM REACTION DESIGN CRITERIA.
3. PROVIDE PRE-DESIGNED CONNECTIONS AS SHOWN IN AISC MANUAL WHERE APPLICABLE.
4. REFER TO GENERAL NOTES FOR BOLT TYPE.

3 OFFSET BEAM CONNECTION

SCALE: N.T.S.

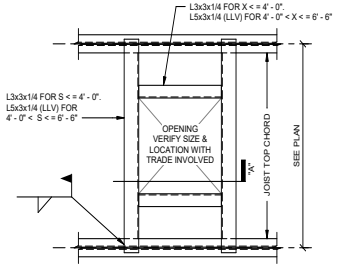

PLAN

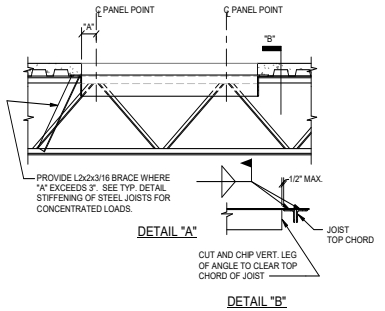

DETAIL "A"

DETAIL "B"

TYPICAL DETAIL
OPEN WEB STEEL JOIST
ROOF OPENING

10 SCALE: 3/4" = 1'-0"

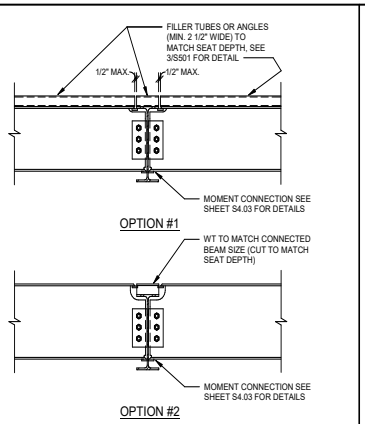

OPTION #1

OPTION #2

TYPICAL DETAIL STEEL BEAM TO BEAM
MOMENT CONNECTION AT OFFSET GIRDER

8 SCALE: N.T.S.

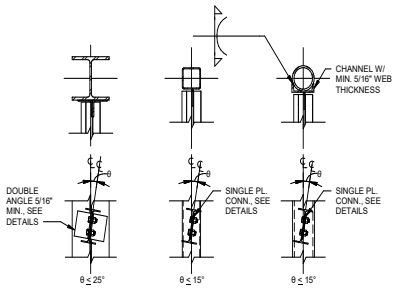

WIDE FLANGE SQUARE ROUND

TYPICAL DETAIL
CANTED BEAM TO COLUMN CONNECTION

7 SCALE: N.T.S.

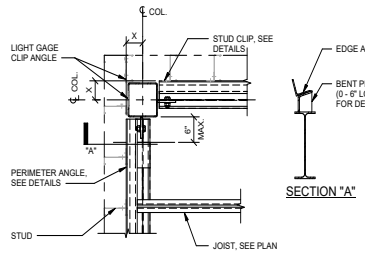

FOR X ≤ 7" AT HSS

SECTION "A"

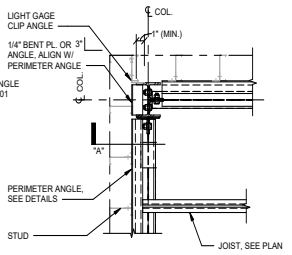

FOR X ≤ 7" AT
WIDE FLANGE

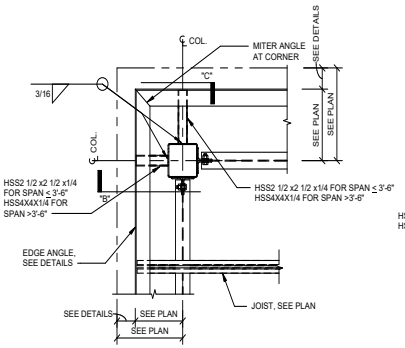

FOR X > 7" AT HSS

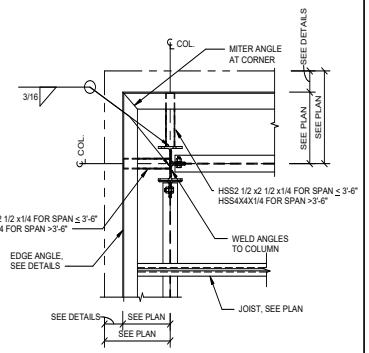

FOR X > 7" AT
WIDE FLANGE

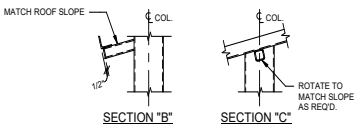

SECTION "B" SECTION "C"

TYPICAL DETAIL
ROOF EDGE AT CORNER

1 SCALE: N.T.S.

PROFESSIONAL SEAL

Matrix Structural Engineers
TBPE Firm Registration No. F-2640

STATE OF TEXAS
JARROD A. KWIATKOWSKI
66260
REGISTERED PROFESSIONAL ENGINEER

01/14/20

LOGO/CONTACT

MATRIX STRUCTURAL ENGINEERS

5177 Richmond Avenue, Suite 670
Houston, TX 77056-2401
Tel: 713.664.0133
Fax: 713.664.1370
MSE - 18134

DESIGN TEAM

Architectural
Martinez Architects

Civil Engineer
Maverick Engineering

Structural
Matrix Structural Engineers

MEP
DBR

Landscaping
KDC Associates

FIRE STATION #5

CITY OF MIDLAND
2200 W GOLF COURSE RD
MIDLAND, TX 79701

PROJECT No: **MA 18017**
DATE: **01/14/2020**

No.	Date	Description
	05/21/19	100% DD
	07/30/19	ISSUE FOR PERMIT
	01/14/20	99% CD

ROOF FRAMING DETAILS

S604

4.1297

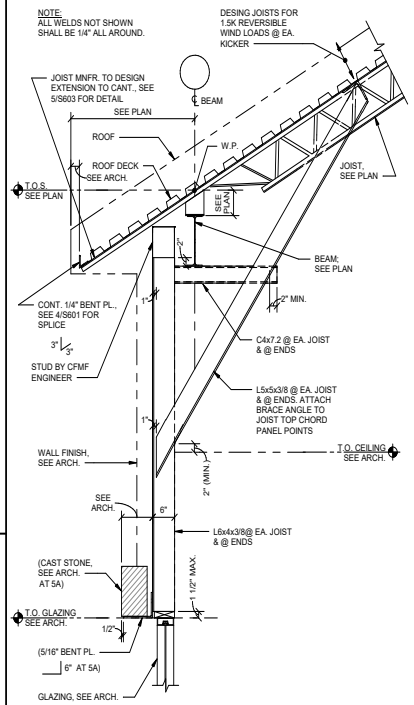

5A

5 ROOF FRAMING DETAIL

SCALE: 3/4" = 1'-0"

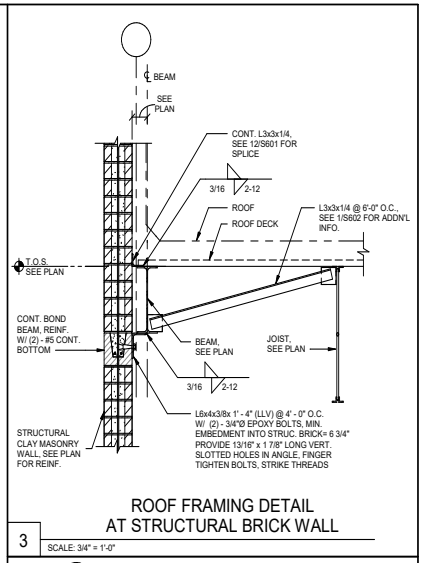

3 ROOF FRAMING DETAIL AT STRUCTURAL BRICK WALL

SCALE: 3/4" = 1'-0"

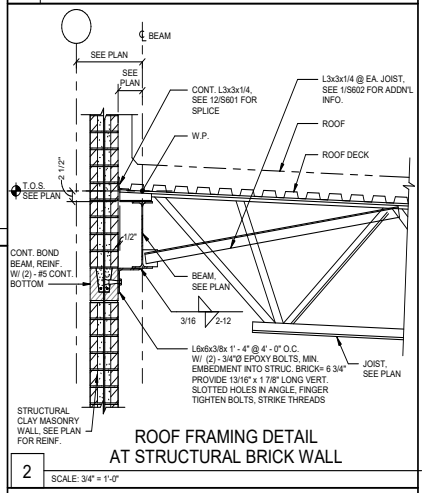

2 ROOF FRAMING DETAIL AT STRUCTURAL BRICK WALL

SCALE: 3/4" = 1'-0"

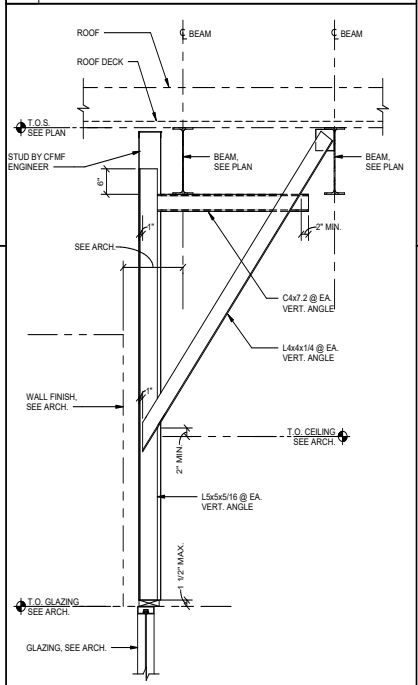

4 BRACING AT GLAZING

SCALE: 3/4" = 1'-0"

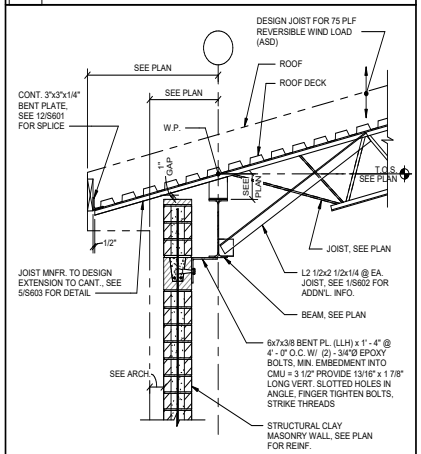

1 ROOF FRAMING DETAIL

SCALE: 3/4" = 1'-0"

PROFESSIONAL SEAL

Matrix Structural Engineers
TBPE Firm Registration No. F-2640

STATE OF TEXAS
JARROD A. KWIATKOWSKI
66260
REGISTERED
PROFESSIONAL ENGINEER

01/14/20

LOGO/CONTACT

MATRIX STRUCTURAL ENGINEERS

5177 Richmond Avenue, Suite 670
Houston, TX 77056-2401
Tel: 713.664.0133
Fax: 713.664.1370
MSE - 18134

DESIGN TEAM

Architectural
Martinez Architects

Civil Engineer
Maverick Engineering

Structural
Matrix Structural Engineers

MEP
DBR

Landscaping
KDC Associates

FIRE STATION #5

CITY OF MIDLAND
2200 W GOLF COURSE RD
MIDLAND, TX 79701

PROJECT No: **MA 18017**
DATE: **01/14/2020**

No.	Date	Description
	05/21/19	100% DD
	07/30/19	ISSUE FOR PERMIT
	01/14/20	99% CD

ROOF FRAMING DETAILS

S605

4.1298

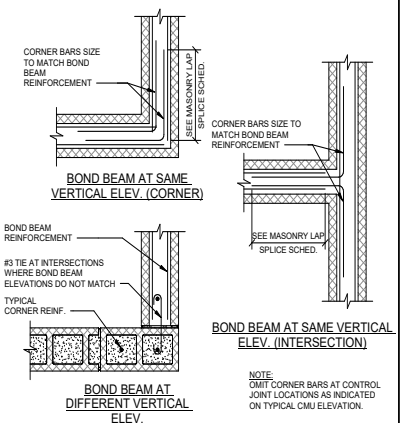

NOTE:
OMIT CORNER BARS AT CONTROL JOINT LOCATIONS AS INDICATED ON TYPICAL CMU ELEVATION.

12 TYPICAL CMU BOND BEAM REINFORCEMENT

SCALE: N.T.S.

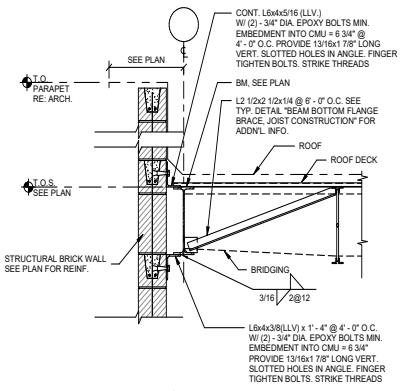

6 TYPICAL DETAIL
EXTERIOR EDGE AT STRUCTURAL BRICK WALL (JOIST PARALLEL TO BEAMS)

SCALE: 3/4" = 1'-0"

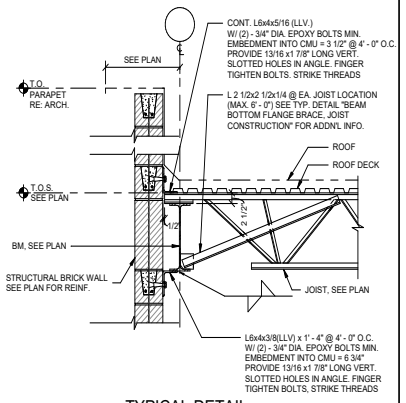

3 TYPICAL DETAIL
EXTERIOR EDGE AT STRUCTURAL BRICK WALL (JOIST PERPENDICULAR TO BEAMS)

SCALE: 3/4" = 1'-0"

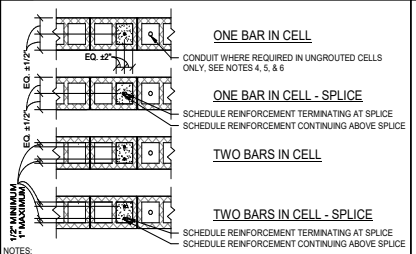

NOTES:
1. REINFORCEMENT MUST BE PLACED USING REINFORCING BAR POSITIONERS THAT LOCATE THE BAR AS SPECIFIED AND PREVENT MOVEMENT OF THE BAR DURING CONSTRUCTION.
2. SPLICED REINFORCEMENT MUST BE A CONTACT LAP SPLICE WITH SPLICED BARS ALIGNED PARALLEL TO THE WALL AS SHOWN.
3. THE ENGINEER MUST BE NOTIFIED PRIOR TO PLACEMENT OF REINFORCEMENT THAT IS REQUIRED TO BE PLACED OUTSIDE OF THE TOLERANCES OF THIS DETAIL SUCH AS TO AVOID INTERFERENCE WITH OTHER REINFORCEMENT, CONDUITS, OR EMBEDDED ITEMS.
4. CONDUIT, PIPES AND SLEEVES SHALL BE NO CLOSER THAN 3 DIAMETERS ON CENTER (USE LARGER DIAMETER WHERE MULTIPLE SIZES ARE USED).
5. ALUMINUM PIPES MAY NOT BE USED UNLESS EFFECTIVELY COATED TO PREVENT CHEMICAL REACTION.
6. PIPES SHALL NOT BE EMBEDDED IN MASONRY WHEN:
   (a) CONTAINING LIQUIDS, GAS, OR VAPORS AT A TEMPERATURE HIGHER THAN 150°F (66°C).
   (b) UNDER PRESSURE IN EXCESS OF 55 PSI (379 KPA).
   (c) CONTAINING WATER OR OTHER LIQUIDS SUBJECT TO FREEZING.

11 TYPICAL DETAIL
CMU VERTICAL BAR PLACEMENT

SCALE: N.T.S.

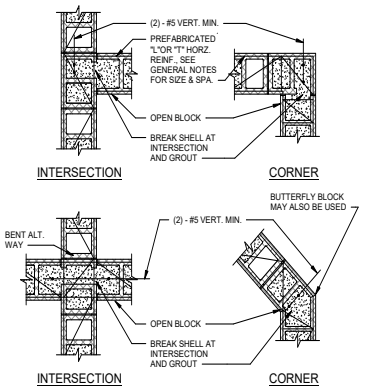

8 CMU WALL INTERSECTIONS

SCALE: N.T.S.

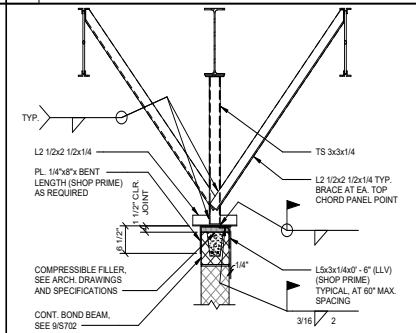

NOTES:
1. THIS DETAIL IS TO BE USED ONLY IF INTERSECTING SUPPORT WALLS EXCEED A SPACING OF 26 TIMES THE NOMINAL THICKNESS.
2. SEE 9/S702 FOR BRACE LOCATION REQUIREMENTS.

5 TYPICAL DETAIL
INTERIOR NON-LOAD BEARING CMU WALL TOP CONNECTION TO STEEL BEAM

SCALE: N.T.S.

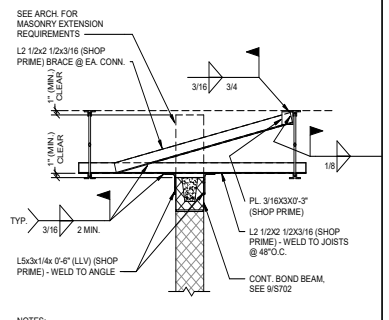

NOTES:
1. THIS DETAIL IS TO BE USED ONLY IF INTERSECTING SUPPORT WALLS EXCEED A SPACING OF 26 TIMES THE NOMINAL THICKNESS.
2. SEE 9/S702 FOR BRACE LOCATION REQUIREMENTS.

2 TYPICAL DETAIL
INTERIOR NON-LOAD BEARING CMU WALL TOP CONNECTION PARALLEL TO BAR JOISTS

SCALE: N.T.S.

BAR SIZE	MINIMUM LAP SPLICE LENGTH REINFORCEMENT AT CENTER OF WALL 6" CMU	8" CMU	10" CMU	12" CMU	REINFORCEMENT OFF CENTER ANY
3	12	12	12	12	19
4	20	15	12	12	34
5	32[4]	23	18	15	45
6	54[4]	43	34	28	54
7	N/A[3]	60	46	38	63
8	N/A[3]	72	71	57	72

NOTES:
1. TABLE FOR USE WITH GRADE 60 UNCOATED REINF. BARS IN CMU (f'm = 1500 psi)
2. BARS SPLICED BY NON-CONTACT LAP SPLICE SHALL NOT BE SPACED FARTHER APART THAN, ONE-FIFTH THE REQUIRED LAP LENGTH, OR 8".
3. LAP LENGTHS PER IBC 2012.
4. PERMITTED ONLY IF ALL MORTAR FINS ARE REMOVED ROM THE CELL TO BE GROUTED.
5. BAR EXCEEDS MAX. ALLOWABLE SIZE.

10 TYPICAL DETAIL
MASONRY TENSION LAP SPLICE (INCHES)

SCALE: N.T.S.

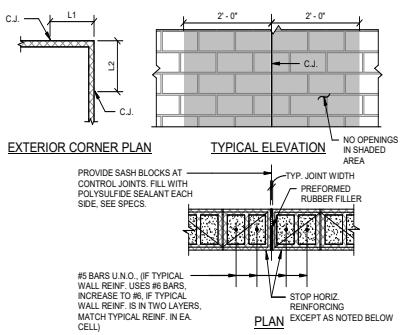

NOTES:
1. CONTRACTOR SHALL OBTAIN ARCHITECT'S APPROVAL OF JOINT LOCATIONS, WHICH SHALL NOT EXCEED THE MINIMUM OF 1.5 TIMES THE WALL HEIGHT OR 20'-0".
2. HORIZONTAL REINFORCING AT FLOOR AND ROOF LINES SHALL BE CONTINUOUS THRU JOINT.
3. CONCRETE BLOCK SHOWN - BRICK SIMILAR.
4. SAWCUT BLOCK OR BRICK AS REQUIRED.
5. AT EXTERIOR CORNERS LOCATE JOINTS SUCH THAT:
   L1+L2 ≤ 20' - 0",
   EITHER L1 OR L2 ≤ 10' - 0".

7 MASONRY WALL CONTROL JOINT

SCALE: N.T.S.

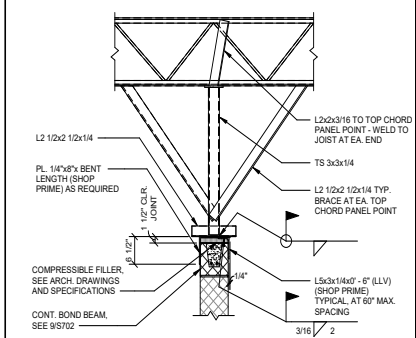

NOTES:
1. THIS DETAIL IS TO BE USED ONLY IF INTERSECTING SUPPORT WALLS EXCEED A SPACING OF 26 TIMES THE NOMINAL THICKNESS.
2. SEE 9/S702 FOR BRACE LOCATION REQUIREMENTS.

4 TYPICAL DETAIL
INTERIOR NON-LOAD BEARING CMU WALL TOP CONNECTION PERPENDICULAR TO JOISTS

SCALE: N.T.S.

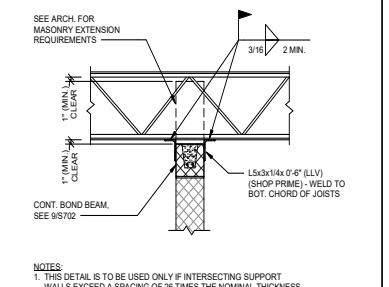

NOTES:
1. THIS DETAIL IS TO BE USED ONLY IF INTERSECTING SUPPORT WALLS EXCEED A SPACING OF 26 TIMES THE NOMINAL THICKNESS.
2. SEE 9/S702 FOR BRACE LOCATION REQUIREMENTS.

1 TYPICAL DETAIL
INTERIOR NON-LOAD BEARING CMU WALL TOP CONNECTION PERPENDICULAR TO BAR JOISTS

SCALE: N.T.S.

PROFESSIONAL SEAL

Matrix Structural Engineers
TBPE Firm Registration No. F-2640

01/14/20

LOGO/CONTACT

MATRIX STRUCTURAL ENGINEERS

5177 Richmond Avenue, Suite 670
Houston, TX 77046-2401
Tel: 713.664.0133
Fax: 713.664.1370
MSE - 18134

DESIGN TEAM

Architectural
Martinez Architects

Civil Engineer
Maverick Engineering

Structural
Matrix Structural Engineers

MEP
DBR

Landscaping
KDC Associates

FIRE STATION #5

CITY OF MIDLAND
2200 W GOLF COURSE RD
MIDLAND, TX 79701

PROJECT No: **MA 18017**
DATE: **01/14/2020**

No.	Date	Description
	05/21/19	100% DD
	07/30/19	ISSUE FOR PERMIT
	01/14/20	99% CD

MASONRY DETAILS

S701

4.1299

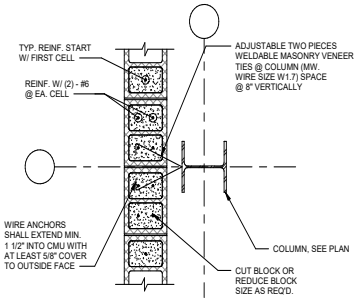

PLAN VIEW

TYPICAL DETAIL
STEEL COLUMN AT CMU WALL

12 SCALE: N.T.S.

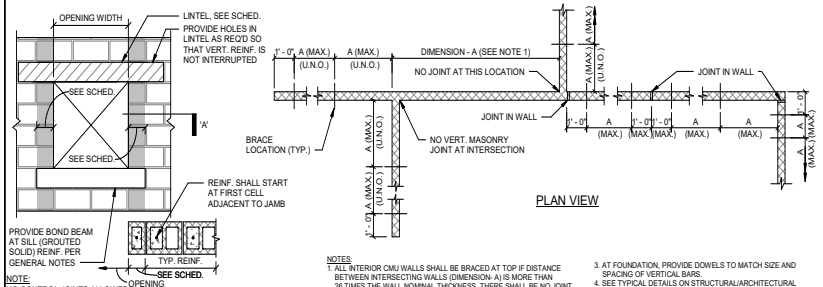

NOTE:
NO CONTROL JOINTS ALLOWED WITHIN SHADED AREA.

SECTION 'A'

PLAN VIEW

INTERIOR NON-LOAD BEARING CMU WALL JAMB SCHEDULE							
WALL THICKNESS	SPANNING CMU HEIGHT	OPENING WIDTH ≤ 3' - 0" # OF CELLS	REINF.	OPENING WIDTH ≤ 6' - 0" # OF CELLS	REINF.	OPENING WIDTH ≤ 10' - 0" # OF CELLS	REINF.
6"	≤ 14' - 0"	1	GROUT	1	#4	1	#4
6"	≤ 18' - 0"	1	#4	1	#4	1	#5
8"	≤ 18' - 0"	1	GROUT	1	#4	1	#4
8"	≤ 24' - 0"	1	#4	1	#4	1	#5
12"	≤ 24' - 0"	1	#4	1	#5	1	#5
12"	≤ 36' - 0"	2	#4	2	#4	2	#6

NOTES:
1. ALL INTERIOR CMU WALLS SHALL BE BRACED AT TOP IF DISTANCE BETWEEN INTERSECTING WALLS (DIMENSION- A) IS MORE THAN 26 TIMES THE WALL NOMINAL THICKNESS. THERE SHALL BE NO JOINT BETWEEN WALLS AT THE INTERSECTIONS OR IN BETWEEN THE INTERSECTING WALLS. THERE SHALL BE NO DOORS OR ANY OTHER OPENINGS LARGER THAN 24 INCHES WITHOUT JAMB REINFORCING, SEE SCHEDULE FOR LARGER OPENINGS. MINIMUM LENGTH OF INTERSECTING WALLS SHALL BE 4 FEET.
2. REINFORCE VERTICALLY SPANNING CMU WALLS AS FOLLOWS:

WALL THICKNESS	HEIGHT	VERTICAL REINFORCING
6"	≤14' - 0"	NONE
6"	14' - 0" TO 18' - 0"	#4 @ 48"
8"	≤18' - 0"	NONE
8"	18' - 0" TO 24' - 0"	#4 @ 48"
12"	≤24' - 0"	NONE
12"	24' - 0" TO 36' - 0"	#5 @ 48"

ALL REINFORCED CELLS SHALL BE GROUTED SOLID.
3. AT FOUNDATION, PROVIDE DOWELS TO MATCH SIZE AND SPACING OF VERTICAL BARS.
4. SEE TYPICAL DETAILS ON STRUCTURAL/ARCHITECTURAL DRAWINGS FOR BRACING REQUIREMENTS AT THE TOP OF CMU WALLS. THIS DETAIL SHALL APPLY IF SPECIFIC REINFORCING AND BRACING DETAILS ARE NOT SHOWN ON ARCHITECTURAL/STRUCTURAL DRAWINGS.
5. CONSULT WITH ARCHITECT/ENGINEER WHEN HEIGHT OF WALL EXCEEDS THE HEIGHT SHOWN ABOVE.
6. PROVIDE CONTINUOUS BOND BEAM AT THE TOP OF WALLS. REINFORCE BOND BEAMS WITH (2) - #4 FOR 6" WALLS & (2)-#5 FOR 8" & 12" WALLS, UNLESS NOTED OTHERWISE.
7. SEE GENERAL NOTES FOR ADDITIONAL INFORMATION.

TYPICAL DETAIL - NON-LOAD BEARING
INTERIOR/CMU WALLS BRACING AND REINFORCING STEEL

9 SCALE: N.T.S.

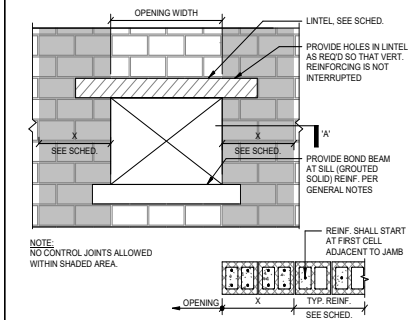

NOTE:
NO CONTROL JOINTS ALLOWED WITHIN SHADED AREA.

SECTION 'A'

OPENING SIZE	JAMB WIDTH 'X'	JAMB REINF.
≥ 3' - 0" & ≤ 5' - 0"	1' - 4"	(2) - #5 @ 8" O.C.
≤ 8' - 0"	2' - 0"	(2) - #5 @ 8" O.C.
≤ 12' - 0"	2' - 8"	(2) - #7 @ 8" O.C.

EXTERIOR CMU / STRUCTURAL CLAY MASONRY
JAMB REINFORCING SCHEDULE

3 SCALE: 3/4" = 1'-0"

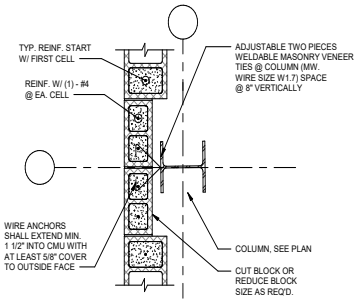

PLAN VIEW

TYPICAL DETAIL
STEEL COLUMN AT CMU WALL

11 SCALE: N.T.S.

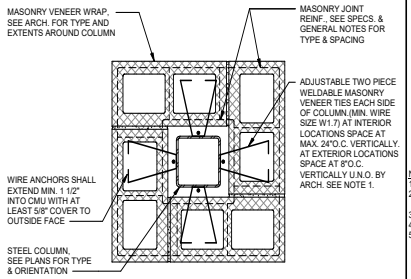

NOTES:
1. REDUCE ANCHOR SPACING OR PROVIDE DOUBLE ANCHORS AT EA. LOCATION AS REQ'D SO THAT THERE IS AT LEAST ONE ANCHOR FOR EACH 2.67 SQUARE FEET OF WALL AREA AT INTERIOR LOCATIONS & ONE ANCHOR FOR EACH 1.87 SQUARE FEET OF WALL AREA AT EXTERIOR LOCATIONS.
2. WHERE STUDS & SHEATHING ARE PROVIDED AROUND COLUMN, THIS DETAIL DOES NOT APPLY REFER TO ARCH. FOR DETAIL.
3. THIS DETAIL APPLIES AT BRICK CONCRETE & STONE MASONRY.

TYPICAL DETAIL
MASONRY WRAP AT STEEL COLUMN

8 SCALE: N.T.S.

CLEAR SPAN	REINFORCING REQUIREMENTS IN NOMINAL LINTEL SECTION 4x8	6x8	6x16	8x8	8x16	10x8	10x16	12x8	12x16
3-4	1-#3	1-#3	—	1-#3	—	2-#3	—	2-#3	—
4-0	1-#3	1-#4	—	2-#3	—	2-#3	—	2-#4	—
4-8	1-#4	1-#4	—	2-#4	—	2-#4	—	2-#4	—
5-4	1-#4	2-#4	—	2-#4	—	2-#4	2-#3	2-#5	—
6-0	1-#5	2-#4	1-#4	2-#4	2-#3	2-#5	2-#4	2-#5	2-#4
6-8	N/A	N/A	1-#5	N/A	2-#4	N/A	2-#4	2-#6	2-#4
7-4	↓	↓	1-#5	↓	2-#4	↓	2-#4	N/A	2-#5
8-0	↓	↓	1-#6	↓	2-#4	↓	2-#5	↓	2-#5
8-8	↓	↓	1-#6	↓	2-#5	↓	2-#5	↓	2-#6
9-4	N/A	N/A	1-#7	N/A	2-#5	N/A	2-#6	N/A	2-#6

NOTES:
1. SEE ARCHITECTURAL DRAWINGS FOR SIZE & LOCATION OF OPENINGS.
2. PROVIDE 1" OF BEARING AT EACH JAMB FOR EACH FOOT OF CLEAR SPAN BUT NOT LESS THAN 8". REINFORCEMENT SHALL PROJECT A MINIMUM OF 6" ONTO THE BEARING.
3. MINIMUM MASONRY COMPRESSIVE STRENGTH OF GROUTED PRISM F 'M = 2000 PSI.
4. LINTELS SCHEDULED AT 16" HIGH MAY BE EITHER TYPE "B" OR TYPE "C" AS DETAILED BELOW.
5. PRECAST CONCRETE LINTELS AS SHOWN MAY BE USED WITH ARCHITECT'S APPROVAL F ' C = 3000 PSI.

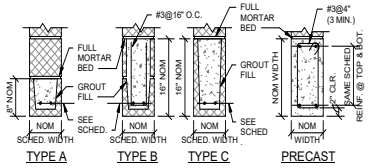

TYPE A TYPE B TYPE C PRECAST

NON-LOAD BEARING BLOCK LINTEL SCHEDULE

5 SCALE: N.T.S.

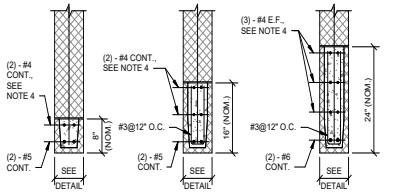

FOR OPENING LESS THAN 5' - 0" WIDE | FOR OPENING 5' - 0" TO 8' - 0" WIDE | FOR OPENING OVER 8' - 0" UP TO 12' - 0" WIDE

NOTES:
1. SEE ARCH. DRAWINGS FOR SIZE AND LOCATION OF OPENINGS.
2. PROVIDE 1" OF BEARING @ EACH JAMB FOR EACH FOOT OF CLEAR SPAN BUT NOT LESS THAN 8". REINF. SHALL PROJECT A MIN. OF 6" ONTO THE BEARING CMU.
3. BOND BEAMS SHALL BE FULLY GROUTED (2500 PSI @ 28 DAYS).
4. THE #4 BARS ARE ONLY REQUIRED AT EXTERIOR CMU WALLS.

TYPICAL DETAIL
EXTERIOR CMU BLOCK LINTEL

2 SCALE: N.T.S.

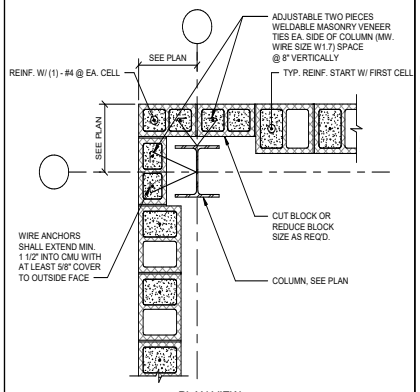

PLAN VIEW

TYPICAL DETAIL
STEEL COLUMN AT CMU WALL

10 SCALE: N.T.S.

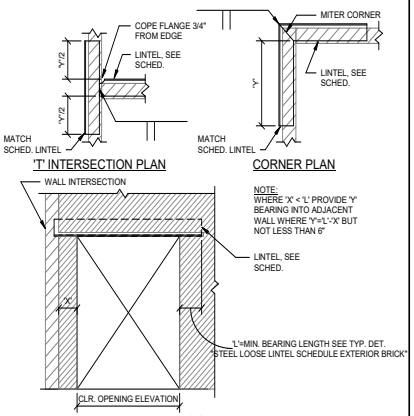

BRICK LOOSE LINTEL AT
CORNER AND INTERSECTION

7 SCALE: N.T.S.

CLEAR OPNG.	MINIMUM ANGLE SIZE
≤ 6'-0"	1 - L 3 1/2 x 'L' x 5/16
6'-8"	1 - L 4 x 'L' x 5/16
7'-4"	1 - L 5 x 'L' x 5/16
8'-0"	1 - L 6 x 'L' x 5/16
10'-0"	1 - L 6 x 'L' x 3/8
12'-0"	1 - L 8 x 'L' x 7/16 *

* 1/2" THK. ANGLE MAY ALSO BE USED

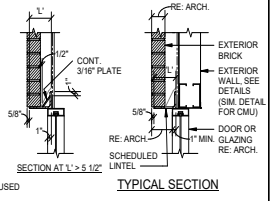

TYPICAL SECTION

NOTES:
1. SEE ARCHITECTURAL DRAWINGS FOR SIZE AND LOCATION OF OPENINGS.
2. PROVIDE 1" OF BEARING AT EACH JAMB FOR EACH FOOT OF CLEAR SPAN BUT NOT LESS THAN 6".
3. WHERE MINIMUM BEARING CANNOT BE ACHIEVED, PROVIDE ADEQUATE CONNECTION TO ADJACENT STRUCTURAL MEMBERS OR PROVIDE SEPARATE VERTICAL SUPPORTS. SUBMIT SUCH DETAILS FOR THE ENGINEER'S APPROVAL.
4. ALL LINTELS SHALL BE HOT DIPPED GALVANIZED AFTER FABRICATION.
5. FOR MASONRY OPENINGS GREATER THAN 10'-0", SEE DETAILS ON THE DRAWINGS OR REFER TO ENGINEER.
6. BRICK HEIGHTS OVER OPENINGS GREATER THAN ONE HALF THE LINTEL SPAN SHALL BE SHORED UNTIL MORTAR HAS SET AND CURED.
7. 'L' DIMENSION SHALL NOT BE LESS THAN 4" FOR 'L' DIMENSION GREATER THAN 5 1/2". PROVIDE 3/16" PLATE STIFFENER.
8. WHERE MINIMUM ANGLE THICKNESS EXCEEDS GROUT BED THICKNESS. BOOT CUT BRICK AS REQ'D IN ORDER TO MAINTAIN LEVEL COURSING

TYPICAL DETAIL
STEEL LOOSE LINTEL SCHEDULE EXTERIOR BRICK

4 SCALE: N.T.S.

WALL THICKNESS	UNBRACED HEIGHT	VERTICAL REINFORCING
8"	14' - 0" MAX	#5 @ 32"
8"	18' - 0" MAX	#5 @ 24"

NOTES:
1. SEE GENERAL NOTES FOR ADDITIONAL INFORMATION.
2. ALL REINFORCING STEEL SHALL BE CONTINUOUS BETWEEN FOUNDATION AND TOP OF CMU. SPLICE REINFORCING PER GENERAL NOTES. ALL REINFORCED CELLS SHALL BE GROUTED SOLID.
3. AT FOUNDATION, PROVIDE DOWELS TO MATCH SIZE AND SPACING OF VERTICAL BARS.
4. CONSULT WITH ARCH./EOR WHEN HEIGHT OF WALL EXCEEDS THE HEIGHT SHOWN HERE.
5. PROVIDE CONTINUOUS BOND BEAMS AT THE TOP OF WALLS. REINFORCE BOND BEAMS WITH (2) - #5, UNLESS NOTED OTHERWISE.

TYPICAL DETAIL - EXTERIOR CMU WALL

1 SCALE: N.T.S.

PROFESSIONAL SEAL
Matrix Structural Engineers
TBPE Firm Registration No. F-2640
STATE OF TEXAS
ARNOLD A. KWAYSBATTEE
66260
LICENSED PROFESSIONAL ENGINEER
01/14/20

LOGO/CONTACT
MATRIX STRUCTURAL ENGINEERS
5177 Richmond Avenue, Suite 670
Houston, TX 77046-2401
Tel: 713.664.0133
Fax: 713.664.1370
MSE - 18134

DESIGN TEAM
Architectural
Martinez Architects
Civil Engineer
Maverick Engineering
Structural
Matrix Structural Engineers
MEP
DBR
Landscaping
KDC Associates

FIRE STATION #5
CITY OF MIDLAND
2200 W GOLF COURSE RD
MIDLAND, TX 79701

PROJECT No: **MA 18017**
DATE: **01/14/2020**

No.	Date	Description
	05/21/19	100% DD
	07/30/19	ISSUE FOR PERMIT
	01/14/20	99% CD

MASONRY DETAILS

S702

4.1300

THROUGH BOLT AT CANTILEVER		
CANTILEVER LENGTH	MAX. CONN. SPACING	THROUGH BOLT DIA.
5'-0"	12'-0"	3/8"
	15'-0"	1/2"
8'-0"	8'-0"	1/2"
	12'-0"	5/8"
10'-0"	8'-0"	5/8"
	11'-0"	3/4"

THREADED ROD W/ HY-270 AT CANTILEVER			
CANTILEVER LENGTH	MAX. CONN. SPACING	THREADED ROD	
		DIA.	EMBEDMENT
3'-0"	5'-0"	3/8"	3 3/8"
	12'-0"	3/8"	3 3/8"
5'-0"	5'-0"	1/2"	4 1/2"
	8'-0"	5/8"	5 5/8
	10'-0"	3/4"	6 3/4"

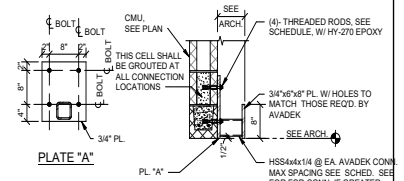

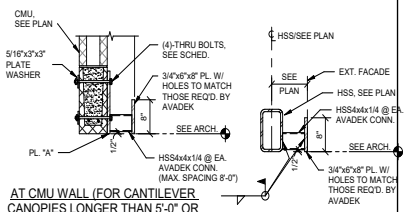

NOTE:
CONCTRACTOR SHALL CONFIRM SPACING FROM CANOPY SUPPLIER PRIOR TO FABRICATION & SUBMIT SHOP SRAWINSS FOR APPROVAL.

8 TYPICAL DETAIL
AT AVADEK CANOPY CONNECTION
SCALE: 3/4" = 1'-0"

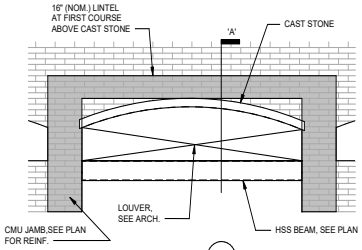

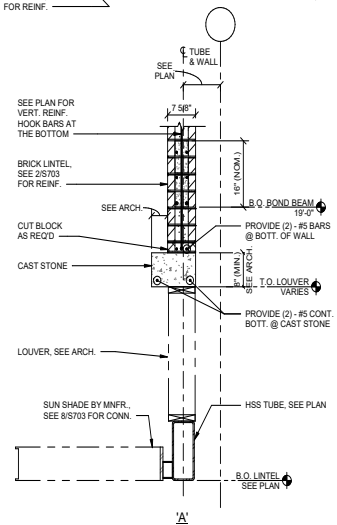

3 STRUCTURAL BRICK ELEVATION AT CAST STONE/LOUVER
SCALE: 1/4" = 1'-0"

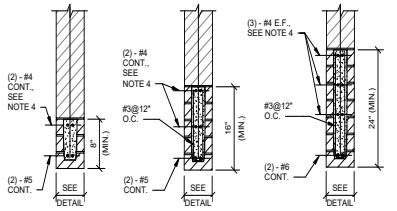

FOR OPENING LESS THAN 5' - 0" WIDE | FOR OPENING 5' - 0" TO 8' - 0" WIDE | FOR OPENING OVER 8' - 0" UP TO 14' - 6" WIDE

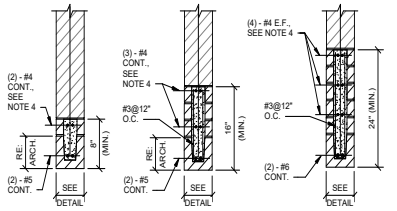

TYPICAL SOLDIER COURSE FOR OPENING LESS THAN 5' - 0" WIDE | TYPICAL SOLDIER COURSE FOR OPENING 5' - 0" TO TO 8' - 0" WIDE | TYPICAL SOLDIER COURSE FOR OPENING FOR OPENING OVER 8' - 0" UP TO 14' - 6" WIDE

NOTES:
1. SEE ARCH. DRAWINGS FOR SIZE AND LOCATION OF OPENINGS.
2. PROVIDE 1" OF BEARING @ EACH JAMB FOR EACH FOOT OF CLEAR SPAN BUT NOT LESS THAN 8". REINF. SHALL PROJECT A MIN. OF 6" ONTO THE BEARING CMU.
3. BOND BEAMS SHALL BE FULLY GROUTED (2500 PSI @ 28 DAYS).
4. THE #4 BARS ARE ONLY REQUIRED AT EXTERIOR CMU WALLS.

2 TYPICAL DETAIL
EXTERIOR CLAY MASONRY BLOCK LINTEL
SCALE:NTS

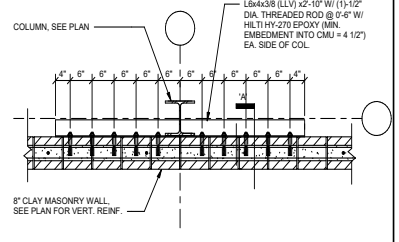

7 COLUMN TO CLAY MASONRY WALL CONNECTION
SCALE: 3/4" = 1'-0"

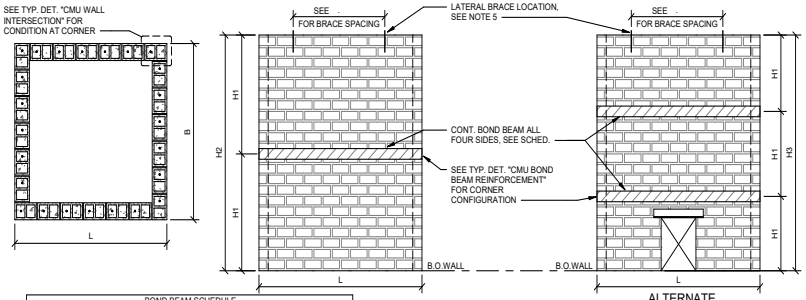

BOND BEAM SCHEDULE						
L OR B	6" WALL		8" WALL		12" WALL	
	BEAM DEPTH	REINF.	BEAM DEPTH	REINF.	BEAM DEPTH	REINF.
8'	8"	(2)-#5B	8"	(2)-#5B	8"	(2)-#5B
10'	8"	(2)-#5B (2)-#5T	8"	(2)-#5B	8"	(2)-#5B
15'	16"	(2)-#5B (2)-#5M (2)-#5T	8"	(2)-#5B (2)-#5T	8"	(2)-#5B
18'	N/A	N/A	16"	(2)-#5B (2)-#5T	8"	(2)-#5B
24'	N/A	N/A	N/A	N/A	16"	(2)-#5B (2)-#5T

NOTES:
1. WHERE H EXCEEDS MAXIMUM SPECIFIED IN TYPICAL DETAIL " NON-LOAD BEARING INTERIOR CMU WALLS BRACING & REINFORCING STEEL " PROVIDE CONT. BOND BEAM AS SHOWN.
2. WHERE CONT. BOND BEAMS ARE USED, WALLS SHALL BE REINFORCED FOR HEIGHT = H1, OTHERWISE REINFORCE WALLS FOR HEIGHT = H2 OR H3
3. SEE TYP. DET. "BOND BEAM AT CONTROL JOINTS" WHERE CONTROL JOINTS INTERSECT BOND BEAM. BOND BEAM SHALL BE TREATED AS A FLOOR (DIAPHRAGM) LEVEL CONDITION
4. H2 SHALL NOT EXCEED 32'-0", H3 SHALL NOT EXCEED 48'-0".
5. IN LIEU OF INTERIOR BRACES AT THE TOP OF WALL CONTRACTOR MAY PROVIDE A BOND BEAM AT THE TOP OF WALL SIZED & REINFORCED PER THE SCHEDULE SHOWN.

1 TYPICAL DETAIL
TALL RECTANGULAR INTERIOR NON-LOAD BEARING CMU WALL BRACING
SCALE: 3/4" = 1'-0"

PROFESSIONAL SEAL
Matrix Structural Engineers
TBPE Firm Registration No. F-2640
STATE OF TEXAS
ARNOLD A. KWAYSBATTEE
66260
LICENSED PROFESSIONAL ENGINEER
01/14/20

LOGO/CONTACT
MATRIX STRUCTURAL ENGINEERS
5177 Richmond Avenue, Suite 670
Houston, TX 77056-2401
Tel: 713.664.0133
Fax: 713.664.1370
MSE - 18134

DESIGN TEAM
Architectural
Martinez Architects
Civil Engineer
Maverick Engineering
Structural
Matrix Structural Engineers
MEP
DBR
Landscaping
KDC Associates

FIRE STATION #5
CITY OF MIDLAND
2200 W GOLF COURSE RD
MIDLAND, TX 79701

PROJECT No: MA 18017
DATE: 01/14/2020

No.	Date	Description
	05/21/19	100% DD
	07/30/19	ISSUE FOR PERMIT
	01/14/20	99% CD

MASONRY DETAILS

S703

4.1301

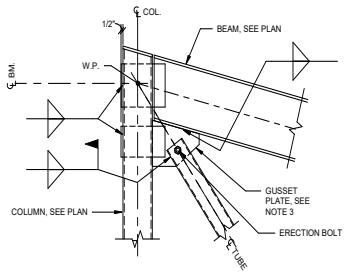

NOTES:

1. REFER TO BRACE ELEVATIONS FOR BRACE SIZES AND FORCES.
2. IF NOT PROVIDED, UNLESS NOTED OTHERWISE, THE BRACE FORCE SHALL BE THE MAXIMUM TENSION AND / OR COMPRESSION CAPACITY OF THE BRACE. IF BRACE FORCES ARE SHOWN, THEY ARE FACTORED LOADS (LRFD).
3. GUSSET PLATE SHALL BE CENTERED ON STEEL BEAM AND DESIGNED TO DEVELOP BRACE FORCE.
4. BOLTS AND WELDS SHALL BE DESIGNED BY THE FABRICATOR FOR THE VERTICAL AND HORIZONTAL COMPONENTS OF THE BRACE FORCE INCLUDING THE EFFECT OF ECCENTRICITY. THE MINIMUM SIZE FILLET WELD SHALL BE 1/4".

TYPICAL DETAIL
BRACE CONNECTION

12 SCALE: 3/4" = 1'-0"

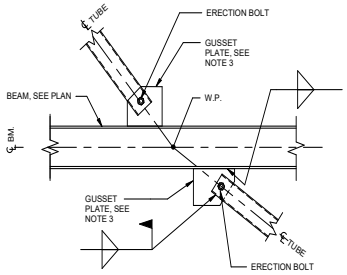

NOTES:

1. REFER TO BRACE ELEVATIONS FOR BRACE SIZES AND FORCES.
2. IF NOT PROVIDED, UNLESS NOTED OTHERWISE, THE BRACE FORCE SHALL BE THE MAXIMUM TENSION AND / OR COMPRESSION CAPACITY OF THE BRACE. IF BRACE FORCES ARE SHOWN, THEY ARE FACTORED LOADS (LRFD).
3. GUSSET PLATE SHALL BE CENTERED ON STEEL BEAM AND DESIGNED TO DEVELOP BRACE FORCE.
4. BOLTS AND WELDS SHALL BE DESIGNED BY THE FABRICATOR FOR THE VERTICAL AND HORIZONTAL COMPONENTS OF THE BRACE FORCE INCLUDING THE EFFECT OF ECCENTRICITY. THE MINIMUM SIZE FILLET WELD SHALL BE 1/4".

TYPICAL DETAIL
BRACE CONNECTION

9 SCALE: 3/4" = 1'-0"

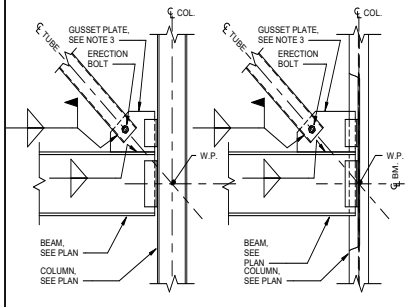

NOTES:

1. REFER TO BRACE ELEVATIONS FOR BRACE SIZES AND FORCES.
2. IF NOT PROVIDED, UNLESS NOTED OTHERWISE, THE BRACE FORCE SHALL BE THE MAXIMUM TENSION AND / OR COMPRESSION CAPACITY OF THE BRACE. IF BRACE FORCES ARE SHOWN, THEY ARE FACTORED LOADS (LRFD).
3. GUSSET PLATE SHALL BE CENTERED ON STEEL BEAM AND DESIGNED TO DEVELOP BRACE FORCE.
4. BOLTS AND WELDS SHALL BE DESIGNED BY THE FABRICATOR FOR THE VERTICAL AND HORIZONTAL COMPONENTS OF THE BRACE FORCE INCLUDING THE EFFECT OF ECCENTRICITY. THE MINIMUM SIZE FILLET WELD SHALL BE 1/4".

TYPICAL DETAIL
BRACE CONNECTION

6 SCALE: 3/4" = 1'-0"

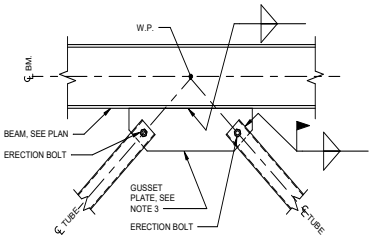

NOTES:

1. REFER TO BRACE ELEVATIONS FOR BRACE SIZES AND FORCES.
2. IF NOT PROVIDED, UNLESS NOTED OTHERWISE, THE BRACE FORCE SHALL BE THE MAXIMUM TENSION AND / OR COMPRESSION CAPACITY OF THE BRACE. IF BRACE FORCES ARE SHOWN, THEY ARE FACTORED LOADS (LRFD).
3. GUSSET PLATE SHALL BE CENTERED ON STEEL BEAM AND DESIGNED TO DEVELOP BRACE FORCE.
4. BOLTS AND WELDS SHALL BE DESIGNED BY THE FABRICATOR FOR THE VERTICAL AND HORIZONTAL COMPONENTS OF THE BRACE FORCE INCLUDING THE EFFECT OF ECCENTRICITY. THE MINIMUM SIZE FILLET WELD SHALL BE 1/4".

TYPICAL DETAIL
BRACE CONNECTION

3 SCALE: 3/4" = 1'-0"

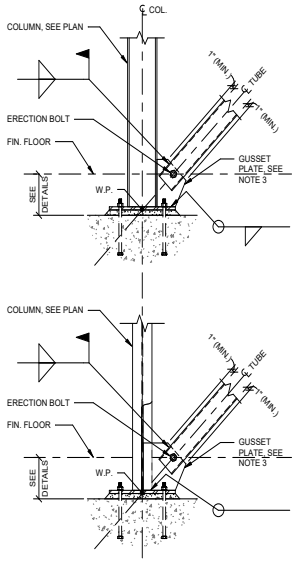

NOTES:

1. REFER TO BRACE ELEVATIONS FOR BRACE SIZES AND FORCES.
2. IF NOT PROVIDED, UNLESS NOTED OTHERWISE, THE BRACE FORCE SHALL BE THE MAXIMUM TENSION AND / OR COMPRESSION CAPACITY OF THE BRACE. IF BRACE FORCES ARE SHOWN, THEY ARE FACTORED LOADS (LRFD).
3. GUSSET PLATE SHALL BE CENTERED ON STEEL BEAM AND DESIGNED TO DEVELOP BRACE FORCE.
4. BOLTS AND WELDS SHALL BE DESIGNED BY THE FABRICATOR FOR THE VERTICAL AND HORIZONTAL COMPONENTS OF THE BRACE FORCE INCLUDING THE EFFECT OF ECCENTRICITY. THE MINIMUM SIZE FILLET WELD SHALL BE 1/4".

TYPICAL DETAIL
BRACE CONNECTION

10 SCALE: 3/4" = 1'-0"

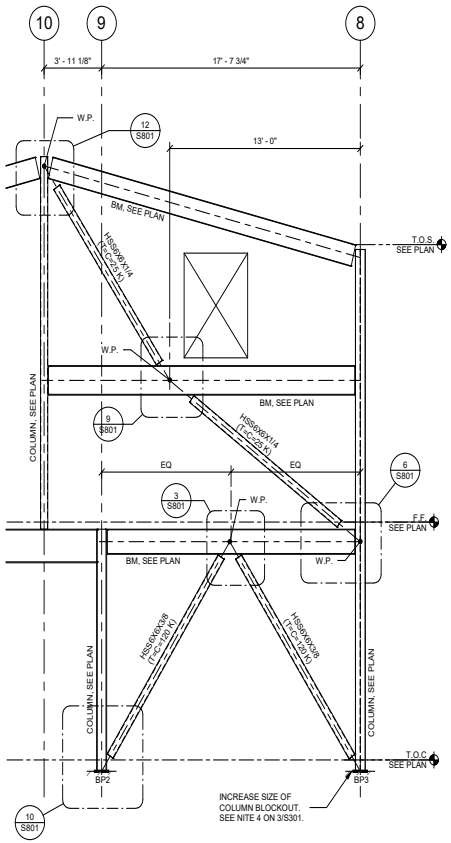

1 BRACE 'A'
SCALE: 1/4" = 1'-0"

PROFESSIONAL SEAL

Matrix Structural Engineers
TBPE Firm Registration No. F-2640

STATE OF TEXAS
ARNOLD A. KWAYSBATTEE
66260
REGISTERED PROFESSIONAL ENGINEER

01/14/20

LOGO/CONTACT

MATRIX STRUCTURAL ENGINEERS

5177 Richmond Avenue, Suite 670
Houston, TX 77046-2401
Tel: 713.664.0133
Fax: 713.664.1370
MSE - 18134

DESIGN TEAM

Architectural
Martinez Architects

Civil Engineer
Maverick Engineering

Structural
Matrix Structural Engineers

MEP
DBR

Landscaping
KDC Associates

FIRE STATION #5

CITY OF MIDLAND
2200 W GOLF COURSE RD
MIDLAND, TX 79701

PROJECT No: **MA 18017**
DATE: **01/14/2020**

No.	Date	Description
	05/21/19	100% DD
	07/30/19	ISSUE FOR PERMIT
	01/14/20	99% CD

BRACE ELEVATIONS & DETAILS

S801

4.1302

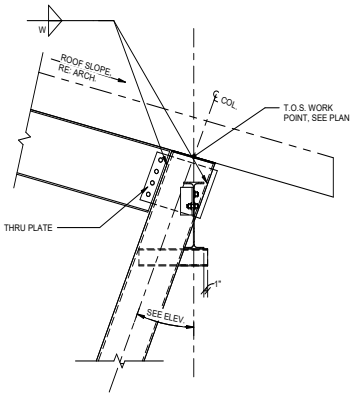

NOTE:
1. W SHALL BE 5/8 x PLATE THICKNESS

12 LEANING COLUMN AT ROOF BEAM
SCALE: 3/4" = 1'-0"

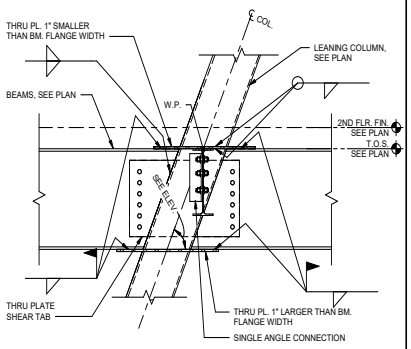

NOTES:
1. THIS DETAIL APPLIES AT ALL HSS TO WIDE FLANGE MOMENT CONNECTIONS U.N.O.
2. U.N.O. PLATES AND WELDS SHOWN SHALL BE DESIGNED FOR AN AXIAL TENSION/COMPRESSION EQUAL TO 90% OF THE BEAM PLASTIC MOMENT DIVIDED BY THE DISTANCE BETWEEN FLANGE CENTROIDS. T=C=[90.9Mp/(D-tf)], WHERE DESIGN MOMENTS ARE PROVIDED THEY MAY BE USED IN LIEU OF THE AFOREMENTIONED CRITERIA, T=C=Mu/(D-tf)

9 MOMENT CONNECTION AT LEANING COLUMN
SCALE: 3/4" = 1'-0"

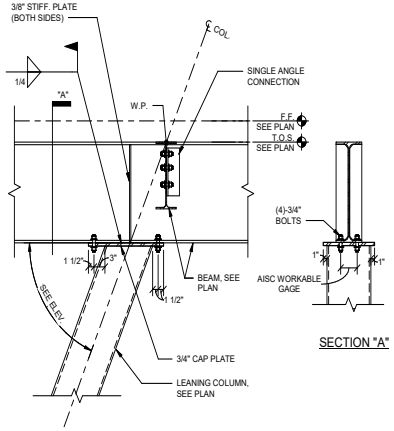

SECTION "A"

6 COLUMN TO BEAM CONNECTION
SCALE: 3/4" = 1'-0"

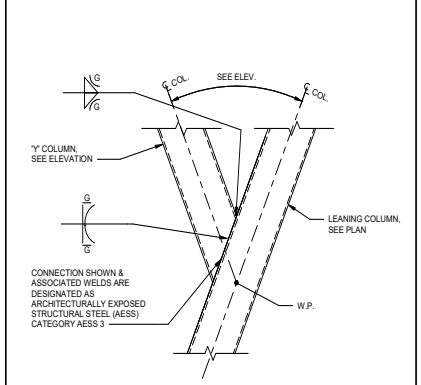

NOTES:
1. ALL EXPOSED STEEL SHALL BE HOT-DIPPED GALVANIZED.
2. SEE SPECIFICATIONS FOR FINISHING & TOLERANCE OF ARCHITECTURALLY EXPOSED STRUCTURAL STEEL.

3 BRANCH CONNECTION AT 'Y' COLUMN
SCALE: 3/4" = 1'-0"

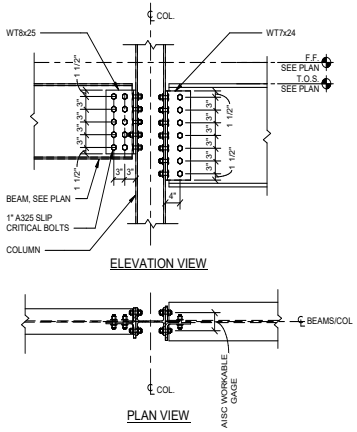

ELEVATION VIEW

PLAN VIEW

10 BEAM TO COLUMN CONNECTION
SCALE: 3/4" = 1'-0"

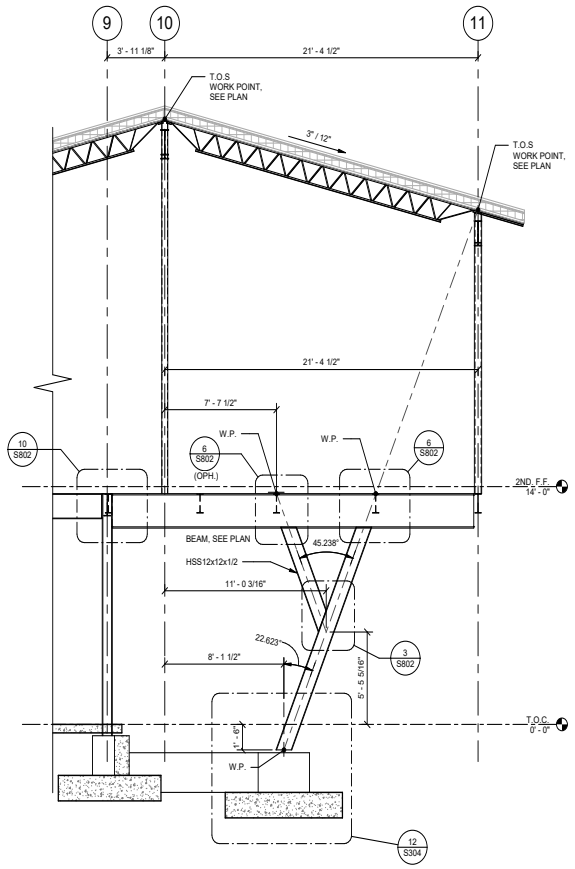

2 ALONG GRID D, B, & A
SCALE: 1/4" = 1'-0"

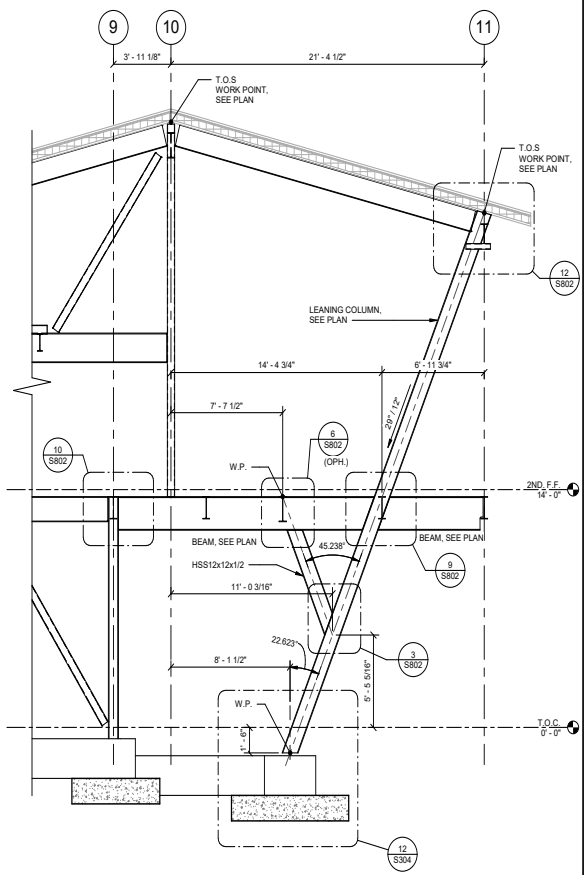

1 ALONG GRID G
SCALE: 1/4" = 1'-0"

PROFESSIONAL SEAL
Matrix Structural Engineers
TBPE Firm Registration No. F-2640
STATE OF TEXAS
ARNOLD A. KWAYSITTE
66260
LICENSED PROFESSIONAL ENGINEER
01/14/20

LOGO/CONTACT
MATRIX STRUCTURAL ENGINEERS
5177 Richmond Avenue, Suite 670
Houston, TX 77056-2401
Tel: 713.664.0133
Fax: 713.664.1370
MSE - 18134

DESIGN TEAM
Architectural
Martinez Architects
Civil Engineer
Maverick Engineering
Structural
Matrix Structural Engineers
MEP
DBR
Landscaping
KDC Associates

FIRE STATION #5
CITY OF MIDLAND
2200 W GOLF COURSE RD
MIDLAND, TX 79701

PROJECT No: **MA 18017**
DATE: **01/14/2020**

No.	Date	Description
	05/21/19	100% DD
	07/30/19	ISSUE FOR PERMIT
	01/14/20	99% CD

LEANING COLUMN ELEVATIONS & DETAILS

S802

4.1303

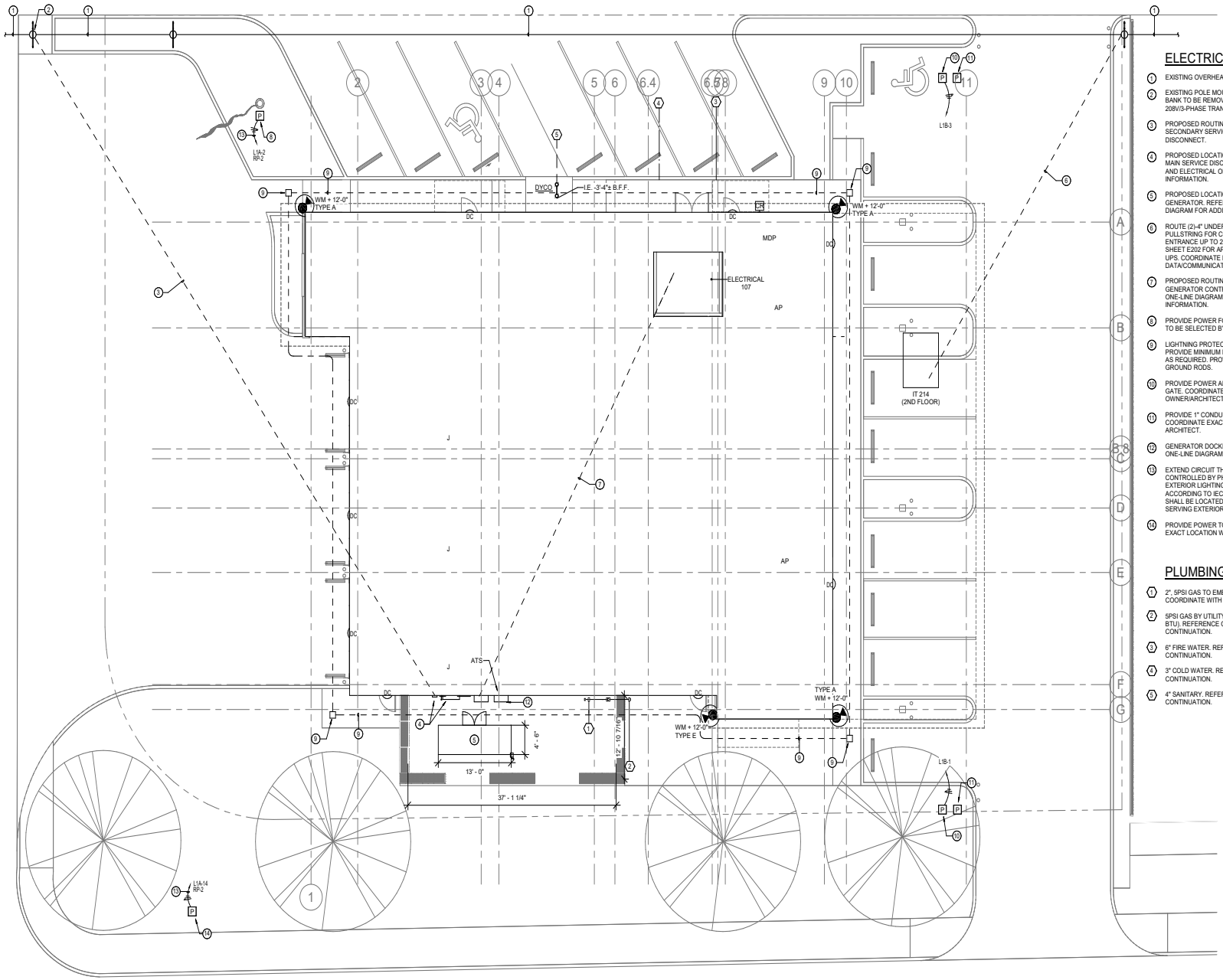

ELECTRICAL KEYED NOTES

1. EXISTING OVERHEAD ELECTRICAL PRIMARY.
2. EXISTING POLE MOUNTED SERVICE TRANSFORMER BANK TO BE REMOVED AND REPLACED WITH NEW 208V/3-PHASE TRANSFORMER BANK.
3. PROPOSED ROUTING OF NEW UNDERGROUND SECONDARY SERVICE LAERAL TO METER/MAIN SERVICE DISCONNECT.
4. PROPOSED LOCATION OF NEW C/T CAN, METER AND MAIN SERVICE DISCONNECT. REFER TO POWER PLAN AND ELECTRICAL ONE-LINE DIAGRAM FOR MORE INFORMATION.
5. PROPOSED LOCATION FOR 200KW NATURAL GAS GENERATOR. REFER TO ELECTRICAL ONE-LINE DIAGRAM FOR ADDITIONAL INFORMATION.
6. ROUTE (2)-4" UNDERGROUND CONDUITS WITH PULLSTRING FOR COMMUNICATION CABLING MAIN ENTRANCE UP TO 2ND FLOOR IT ROOM 214. REFER TO SHEET E202 FOR APPROXIMATE LOCATION OF STUB-UPS. COORDINATE EXACT LOCATION WITH DATA/COMMUNICATION EQUIPMENT PROVIDER.
7. PROPOSED ROUTING OF EMERGENCY FEEDER AND GENERATOR CONTROL WIRING. REFER TO ELECTRICAL ONE-LINE DIAGRAM ON SHEET E401 FOR ADDITIONAL INFORMATION.
8. PROVIDE POWER FOR FLAGPOLE LIGHTING. LIGHTING TO BE SELECTED BY ARCHITECT.
9. LIGHTNING PROTECTION UNDERGROUND LOOP. PROVIDE MINIMUM NUMBER OF ADDITIONAL GROUNDS AS REQUIRED. PROVIDE GROUND TEST WELLS FOR ALL GROUND RODS.
10. PROVIDE POWER AND DATA CONDUIT FOR SECURITY GATE. COORDINATE EXACT LOCATION WITH OWNER/ARCHITECT.
11. PROVIDE 1" CONDUIT FOR CARDREADER TO MDF-IT 214 . COORDINATE EXACT LOCATION WITH OWNER/ ARCHITECT.
12. GENERATOR DOCKING STATION. REFER TO ELECTRICAL ONE-LINE DIAGRAM FOR ADDITIONAL INFORMATION.
13. EXTEND CIRCUIT THROUGH LIGHTING RELAY PANEL 'RP' CONTROLLED BY PHOTOCELL AND TIMECLOCK. EXTERIOR LIGHTING SHALL BE PROGRAMMED ACCORDING TO IECC 2015. LIGHTING RELAY PANEL SHALL BE LOCATED NEXT TO ELECTRICAL PANEL SERVING EXTERIOR LIGHTING LOAD.
14. PROVIDE POWER TO MONUMENT SIGN. COORDINATE EXACT LOCATION WITH OWNER/ARCHITECT.

PLUMBING KEYED NOTES

1. 2", 5PSI GAS TO EMERGENCY GENERATOR. COORDINATE WITH ELECTRICAL.
2. 5PSI GAS BY UTILITY COMPANY (TOTAL LOAD 3,501,300 BTU). REFERENCE CIVIL DRAWINGS FOR CONTINUATION.
3. 6" FIRE WATER. REFERENCE CIVIL DRAWINGS FOR CONTINUATION.
4. 3" COLD WATER. REFERENCE CIVIL DRAWINGS FOR CONTINUATION.
5. 4" SANITARY. REFERENCE CIVIL DRAWINGS FOR CONTINUATION.

1 MEP SITE PLAN
MEP101 1/8" = 1'-0"

TRUE NORTH | PROJECT NORTH

DBR
9601 McAllister Freeway, Suite 410
San Antonio, Texas 78216
210.546.0200 p
210.546.0201 f
TBPE Firm Registration No. 2234

DBR Project Number 196023.000

JC | BV | CL | WJ | MC

PROFESSIONAL SEAL

NOT FOR CONSTRUCTION OR PERMITTING; PRINTED FOR REVIEW ONLY
01/14/2020
M. JACQUELINE CHANG, P.E.
TEXAS #124887

LOGO/CONTACT

martinez ARCHITECTS
Martinez Architect, LP
900 Rockmead, Suite 250
Houston, Texas 77339
281.346.7371

DESIGN TEAM

Architectural
Martinez Architects

Civil Engineer
Maverick Engineering

Structural
Matrix Structural Engineers

MIE/P/T
DBR

Landscape Architect
KDC Associates

-
Consultant 5 Name

FIRE STATION #5

CITY OF MIDLAND
2210 W GOLF COURSE RD
MIDLAND, TX 79701

PROJECT No: MA 18017
DATE: 01/14/2020

No.	Date	Description

MEP SITE PLAN

MEP101

4.1304

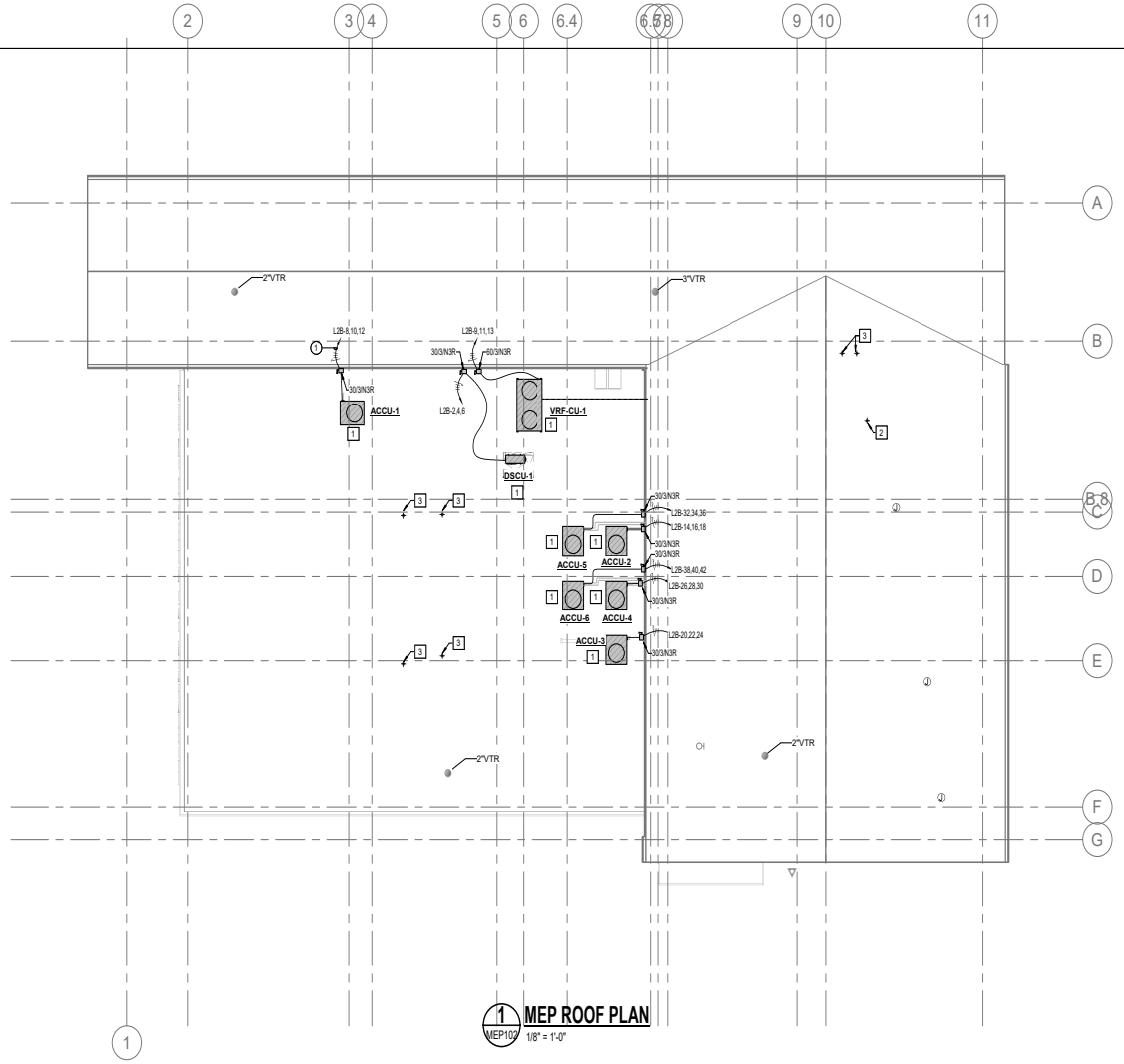

1 MEP ROOF PLAN
MEP102
1/8" = 1'-0"

MECHANICAL KEYED NOTES:

1. PROVIDE ROOF MOUNTED CONDENSING UNIT AS SCHEDULED, AT APPROXIMATE LOCATION SHOWN. ROUTE REFRIGERANT LINES FROM CONDENSING UNIT DOWN THROUGH ROOF TO ASSOCIATED INDOOR UNIT. FILED VERIFY EXACT ROUTING. SIZE LINES PER MANUFACTURER'S RECOMMENDATIONS. RE: DETAILS 1, 2, 4/M602.
2. DRYER EXHAUST UP THROUGH ROOF.
3. GAS FLUE UP THROUGH ROOF.

ELECTRICAL KEYED NOTES:

1. MINI-SPLIT INDOOR EVAPORATOR UNIT SHALL RECEIVE POWER FROM ASSOCIATED ROOFTOP CONDENSING UNIT WITH FIELD SUPPLIED WIRING.

TRUE NORTH
PROJECT NORTH

DBR
9601 McAllister Freeway, Suite 410
San Antonio, Texas 78216
210.546.0200 p
210.546.0201 f
TBPE Firm Registration No. 2234

DBR Project Number 196023.000

JC | BV | CL | WJ | MC

PROFESSIONAL SEAL

NOT FOR CONSTRUCTION OR PERMITTING; PRINTED FOR REVIEW ONLY
01/14/2020
M. JACQUELINE CHANG, P.E.
TEXAS #124987

LOGO/CONTACT

martinez ARCHITECTS
Martinez Architect, LP
900 Rockmead, Suite 250
Houston, Texas 77339
281.346.7371

DESIGN TEAM

Architectural
Martinez Architects

Civil Engineer
Maverick Engineering

Structural
Matrix Structural Engineers

MEP/FP/T
DBR

Landscape Architect
KDC Associates

-
Consultant 5 Name

FIRE STATION #5

CITY OF MIDLAND
2210 W GOLF COURSE RD
MIDLAND, TX 79701

PROJECT No: **MA 18017**
DATE: **01/14/2020**

No.	Date	Description

MEP ROOF PLAN

MEP102

4.1305

ABBREVIATIONS (NOT ALL ITEMS INDICATED APPLY TO THIS PROJECT)

A	
A	AIR (COMPRESSED)
ABV	ABOVE
A/C	AIR CONDITIONING
AC	ALTERNATING CURRENT AIR COMPRESSOR
ACCH	AIR COOLED CHILLER
ACCU	AIR COOLED CONDENSING UNIT
AD	ACCESS DOOR, AREA DRAIN
ADJ	ADJUSTABLE
AF	AIR FILTER
AFC	ABOVE FINISHED CEILING
AFF	ABOVE FINISHED FLOOR
AFG	ABOVE FINISHED GRADE
AHU	AIR HANDLING UNIT
AL	ALUMINUM
AMB	AMBIENT
AP	ACCESS PANEL
APD	AIR PRESSURE DROP
ARI	AMERICAN REFRIGERANT INSTITUTE
ARCH	ARCHITECT, ARCHITECTURAL
AS	AIR SEPARATOR
ASHRAE	AMERICAN SOCIETY OF HEATING AND REFRIGERATION ENGINEERS
ASME	AMERICAN SOCIETY OF MECHANICAL ENGINEERS
ASTM	AMERICAN SOCIETY OF TESTING AND MATERIALS
AV	ACID VENT, AIR VENT
AVG	AVERAGE
AWS	AMERICAN WELDING SOCIETY
AUX	AUXILIARY

B	
B	BOILER
BC	BELOW COUNTER
B/C	BACK OF CURB
BFV	BUTTERFLY VALVE
BH	BOX HYDRANT
BLDG	BUILDING
BM	BENCHMARK
BOF	BOTTOM OF FOOTING
BOS	BOTTOM OF STRUCTURE
BT	BATH TUB, BREAK TANK
BTU	BRITISH THERMAL UNIT
BV	BALL VALVE
BWV	BACK WATER VALVE

C	
C	CELSIUS
CAB	CABINET
CB	CATCH BASIN
CD	CONDENSATE DRAIN LINE
CFM	CUBIC FEET PER MINUTE
CFS	CUBIC FEET PER SECOND
CH	CHILLER
CHW	CHILLED WATER
CHP	CHILLED WATER PUMP
CHR	CHILLED WATER RETURN
CHS	CHILLED WATER SUPPLY
CI	CAST IRON
CIRC	CIRCULATING
CL	CENTERLINE
CLG	CEILING
CLR	CLEAR
CMP	CORRUGATED METAL PIPE
CMU	CONCRETE MASONRY UNIT
CPI	CAST IRON PIPE INSTITUTE
CPVC	CHLORINATED POLYVINYL CHLORIDE
CO	CLEAN OUT
COL	COLUMN
COMB	COMBINATION
COMP	COMPRESSOR
CON	CONVERTER
CONC	CONCRETE, CONCENTRIC
COND	CONDENSER, CONDENSATE
CONN	CONNECTION
CONT	CONTINOUS, CONTINUATION
CONTR	CONTROLLER, CONTRACTOR
CRAC	COMPUTER ROOM A/C UNIT
CRT	CATHODE RAY TUBE
CT	COOLING TOWER
CTR	CENTER
CU	COPPER
CW	COLD WATER
CWP	CONDENSER WATER PUMP
CWR	CONDENSER WATER RETURN
CWS	CONDENSER WATER SUPPLY

D	
D	DEPTH, DRAIN, DRYER
DB	DRY BULB
DC	DOUBLE DUCT CONSTANT VOLUME, DIRECT CURRENT
DDC	DIRECT DIGITAL CONTROL
DESIG	DESIGNATION
DTL	DETAIL
DF	DRINKING FOUNTAIN
DIA	DIAMETER
DIFF	DIFFUSER
DIM	DIMENSION
DISC	DISCONNECT
DN	DOWN
DPR	DAMPER
DS	DUCTLESS SPLIT SYSTEM
DSCU	DUCTLESS SPLIT CONDENSING UNIT
DW	DISHWASHER
DWG	DRAWING
DWH	DOMESTIC WATER HEATER
DWP	DOMESTIC WATER PUMP
DX	DIRECT EXPANSION

E	
EA	EACH
EAT	ENTERING AIR TEMPERATURE
EC	ELECTRICAL CONTRACTOR
ECC	ECCENTRIC
EDB	ENTERING DRY BULB
EDF	ELECTRIC DRINKING FOUNTAIN
EDH	ELECTRIC DUCT HEATER
EF	EXHAUST FAN
EFS	EXHAUST FAN SCIENCE
EFH	EXHAUST FAN HOOD
EFF	EFFICIENCY
EJ	EXPANSION JOINT
EL	ELEVATION
ELEC	ELECTRICAL
ELEV	ELEVATOR EMERGENCY ENCLOSURE
EMERG	EMERGENCY
ENCL	ENCLOSURE
ENGR	ENGINEER
EQ	EQUAL
EQUIP	EQUIPMENT
ERU	ENERGY RECOVERY UNIT
ES	END SUCTION, EMERGENCY SHOWER
ESP	EXTERNAL STATIC PRESSURE EXPANSION TANK
ET	EXPANSION TANK
ETR	EXISTING TO REMAIN
EVAP	EVAPORATOR
EWB	ENTERING WET BULB
EWT	ENTERING WATER TEMPERATURE
EX	EXPLOSION-PROOF
EXT	EXTERNAL
EXTG	EXISTING

F	
F	FAHRENHEIT, FIRE
FBO	FURNISHED BY OTHERS
FCO	FLOOR CLEAN OUT
FCS	FLOOR CONTROL STATION
FCU	FAN COIL UNIT
FD	FLOOR DRAIN, FIRE DAMPER
FDS	FIRE DEPARTMENT SIAMESE
FDV	FIRE DEPARTMENT VALVE
FH	FIRE HYDRANT
FHC	FIRE HOSE CABINET
FHR	FIRE HOSE RACK
FIXT	FIXTURE
FLA	FULL LOAD AMPS
FLEX	FLEXIBLE
FL	FLOW LINES
FLR	FLOOR
FP	FIRE PUMP
FPT	FAN POWERED TERMINAL
FRZR	FREEZER
FS	FLOW SWITCH, FIRE SPRINKLER
FSK	FLOOR SINK
FT	FOOT, FEET
FUT	FUTURE

G	
G	GAS
GA	GAUGE
GAL	GALLON
GALV	GALVANIZED
GC	GENERAL CONTRACTOR
GLV	GLOBE VALVE
GND	GROUND
GPD	GALLONS PER DAY
GPH	GALLONS PER HOUR
GPM	GALLONS PER MINUTE

H	
HB	HOSE BIBB
HD	HEAD, HUB DRAIN
HE	HEAT EXCHANGER
HF	HUMIDIFIER
HORIZ	HORIZONTAL
HP	HORSEPOWER, HALON PANEL
HPU	HEAT PUMP UNIT
HKP	HOUSEKEEPING PAD
HSC	HORIZONTAL SPLIT CASE
HSTAT	HUMIDISTAT
HT	HEIGHT
HTG	HEATING
HTR	HEATER
HW	HOT WATER
HWC	HOT WATER CIRCULATOR
HWP	HEATING WATER PUMP
HWR	HOT WATER RETURN
HWS	HOT WATER SUPPLY
HZ	HERTZ

I	
IAH	INTAKE AIR HOOD
ID	INSIDE DIAMETER
IE	INVERT ELEVATION
IH	INFRARED HEATER
IN	INCH
INSUL	INSULATION
INT	INTERNAL, INTERIOR
IW	INDIRECT WASTE

J	
JB	JUNCTION BOX
JP	JOCKEY PUMP

K	
KEC	KITCHEN EQUIPMENT CONTRACTOR
KEF	KITCHEN EXHAUST FAN
KSF	KITCHEN SUPPLY FAN
KO	KNOCKOUT
KVA	KILOVOLT- AMPS
KW	KILOWATT

L	
L	LENGTH, LAVATORY
LAT	LEAVING AIR TEMPERATURE
LAV	LAVATORY
LF	LINEAR FEET
LP	LOW PRESSURE
LRA	LOCKED ROTOR AMPS
LVL	LEVEL
LWB	LEAVING WET BULB
LWCO	LOW WATER CUT OFF
LWT	LEAVING WATER TEMPERATURE

M	
MAT	MIXED AIR TEMPERATURE
MAX	MAXIMUM
MBTUH	THOUSAND OF BTU'S
MC	MECHANICAL CONTRACTOR
MECH	MECHANICAL
MFR	MANUFACTURER
MH	MANHOLE
MI	MALLEABLE IRON
MIN	MINIMUM
MP	MEDIUM PRESSURE
MS	MOP SINK
MTD	MOUNTED
MU	MAKE-UP
MVD	MANUAL VOLUME DAMPER

N	
N.C.	NORMALLY CLOSED
NFPA	NATIONAL FIRE PROTECTION ASSOCIATION
NIC	NOT IN CONTRACT
N.O.	NORMALLY OPEN
NO.	NUMBER
NTS	NOT TO SCALE

O	
OA	OUTSIDE AIR
OAF	OUTSIDE AIR FAN
OAHU	OUTSIDE AIR HANDLING UNIT
OAIH	OUTSIDE AIR INTAKE HOOD
OBD	OPPOSED BLADE DAMPER
OC	ON CENTER
OD	OUTSIDE DIAMETER, OVERFLOW DRAIN
OFCU	OUTSIDE AIR FAN COIL UNIT
OPG	OPENING
OS&Y	OPEN STEM AND YOLK

P	
P	PUMP, PLUMBING EQUIPMENT
PC	PLUMBING CONTRACTOR
PCR	PUMPED CONDENSATE RETURN
PD	PRESSURE DROP, PLANTER DRAIN
PH	PHASE, POST HYDRANT
PIV	POST INDICATOR VALVE
PLBG	PLUMBING
PNEU	PNEUMATIC
PNL	PANEL
PNTH	PENTHOUSE
PP	POLYPROPYLENE
PPM	PART PER MILLION
PRI	PRIMARY
PRS	PRESSURE REDUCING STATION
PRV	PRESSURE REDUCING VALVE
PSF	POUNDS PER SQUARE FOOT
PSI	POUNDS PER SQUARE INCH
PSIG	POUNDS PER SQUARE INCH GAUGE
PT	PLUMBING TRIM
PV	PLUG VALVE
PVC	POLYVINYL CHLORIDE

Q	
QTY	QUANTITY

R	
RA	RETURN AIR
RAD	REFRIGERATED AIR DRYER
RAF	RETURN AIR FAN
RAG	RETURN AIR GRILL
RAH	RELIEF AIR HOOD
RAT	RETURN AIR TEMPERATURE
RCP	REFLECTED CEILING PLAN, REINFORCED CONCRETE PIPE
RD	ROOF DRAIN
RE	REFERENCE, REFER
RECIRC	RECIRCULATE
RED	REDUCER
REFR	REFRIGERATOR
REG	REGISTER
REINF	REINFREDING
REV	REVISION, REVISE
RH	RELATIVE HUMIDITY
RHG	REFRIGERANT HOT GAS
RKVA	RUNNING KILOVOLT-AMPS
RKW	RUNNING KILOWATTS
RL	REFRIGERANT LIQUID
RLA	RUNNING LOAD AMPS
RM	ROOM, REFRIGERATION MACHINE
RPM	REVOLUTIONS PER MINUTE
RS	REFRIGERANT SUCTION
RTU	ROOFTOP UNIT
RV	RELIEF VALVE

S	
S	STEAM
SA	SUPPLY AIR
SAF	SUPPLY AIR FAN
SAG	SUPPLY AIR GRILLE
SAN	SANITARY SEWER
SAR	SUPPLY AIR REGISTER
SC	STEAM CONDENSATE
SCHED	SCHEDULED
SCHP	SECONDARY CHILLED WATER PUMP
SCR	SILICON CONTROLLED RECTIFIER
SD	STORM DRAIN
SE	SEWAGE EJECTOR
SEC	SECONDARY
SECT	SECTION
SENS	SENSIBLE
SF	SQUARE FEET
SFCS	SPRINKLER FLOOR CONTROL STATION
SH	SHOWER
SHT	SHEET
SIM	SIMILAR
SK	SINK
SKVA	STARTING KILOWATTS-AMPS
SMW	SHEETMETAL
SP	SUMP PUMP, STATIC PRESSURE
SPEC	SPECIFICATION
SPR	SPRINKLER
SQ	SQUARE
SS	SERVICE SINK
SSD	SUBSURFACE DRAIN
SSFU	SANITARY SEWER FIXTURE UNITS
SSSC	SOLID STATE SPEED CONTROL
ST	STORAGE TANKS
STD	STANDARD
STL	STEEL

T	
TC	TEMPERATURE CONTROL
TCC	TEMPERATURE CONTROL COMPRESSOR
TD	TRENCH DRAIN
TF	TRANSFER FAN
TDH	TOTAL DYNAMIC HEAD
TH BLK	THRUST BLOCK
TP	TRAP PRIMER
TPD	TRAP PRIMER DEVICE
TSP	TOTAL STATIC PRESSURE
TSTAT	THERMOSTAT
TYP	TYPICAL

U	
U	URINAL
UCD	UNDER CUT DOOR
UG	UNDERGROUND
UH	UNIT HEATER
UL	UNDERWRITERS LABORATORIES, INC.
UNO	UNLESS NOTED OTHERWISE
U/F	UNDERFLOOR
U/S	UNDERSLAB

V	
V	VOLT, VENT
VA	VOLT- AMPERE
VAC	VACUUM
VAV	VARIABLE AIR VOLUME
VB	VALVE BOX, VACUUM BREAKER
VCP	VITRIFIED CLAY PIPE
VD	VOLUME DAMPER
VEL	VELOCITY
VERT	VERTICAL
VFD	VARIABLE FREQUENCY DRIVE
VIB	VALVE IN BOX
VOV	VALVE ON VERTICAL
VP	VACUUM PUMP
VR	VARIABLE AIR VOLUME REHEAT
VTR	VENT THRU ROOF

W	
W	WATT, WASTE, WIDTH, WASHER
W/	WITH
W/O	WITHOUT
WB	WET BULB
WC	WATER CLOSET
WCO	WALL CLEAN OUT
WH	WALL HYDRANT
WM	WATER METER
WP	WEATHERPROOF
WPD	WATER PRESSURE DROP
WWF	WELDED WIRE FABRIC

DUCTWORK

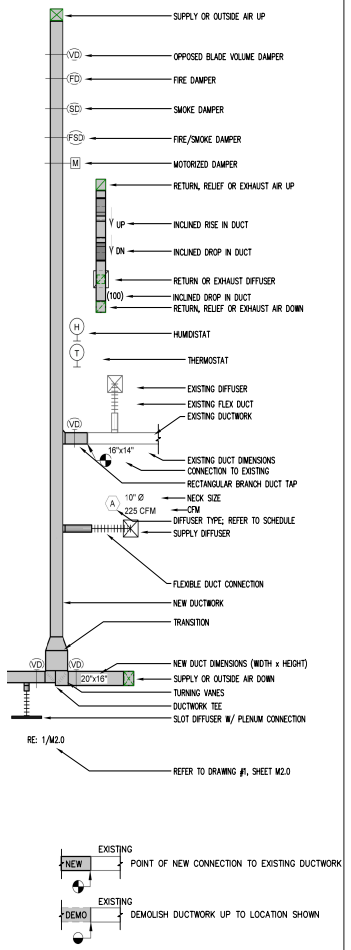

GENERAL NOTES:(APPLY TO ALL SHEETS)

1. CONTRACTOR SHALL COMPLY WITH ALL STATE, LOCAL, AND FEDERAL CODES AND AUTHORITIES HAVING JURISDICTION.
2. IT IS THE CONTRACTOR'S RESPONSIBILITY TO HAVE VERIFIED EXISTING JOBSITE CONDITIONS DURING THE BIDDING PERIOD, SO HE WILL HAVE OBTAINED THE SCOPE OF MECHANICAL WORK INVOLVED. THE SCOPE OF THE WORK SHALL INCLUDE MATERIALS AND DUCTWORK CONSISTING OF DEVICES, EQUIPMENT OR APPARATUS WHICH MUST BE REROUTED, RELOCATED OR REMOVED EITHER TEMPORARILY OR PERMANENTLY, OR WHICH MUST BE PROVIDED SO THAT THE INDICATED REMODELING MAY BE ACCOMPLISHED. NOT ALL EXISTING CONDITIONS ARE NECESSARILY INDICATED ON THE DRAWINGS.
3. CONTRACTOR SHALL COORDINATE WITH STRUCTURAL CONDITIONS AT THE SITE AND PROVIDE ALL REQUIRED CLEARANCES.
4. CONTRACTOR SHALL COORDINATE WITH ELECTRICAL CONTRACTOR FOR ALL ELECTRICAL POWER REQUIREMENTS.
5. CONTRACTOR SHALL PROVIDE U.L. LISTED FIRE CAULK SEALANT AT ALL PIPING PENETRATIONS THROUGH FIRE RATED WALLS.
6. DUCT SIZES SHOWN ON PLANS ARE CLEAR INSIDE DIMENSIONS.
7. CONTRACTOR SHALL PROVIDE ALL NECESSARY TESTING AND BALANCING FOR THIS PROJECT. REFER TO DIV.23 SPECIFICATIONS.
8. MECHANICAL CONTRACTOR SHALL COORDINATE WITH ALL OTHER TRADES FOR THE SYSTEM TO MEET DESIGN INTENT.
9. MECHANICAL EQUIPMENT, DUCTWORK, PIPING AND ACCESSORIES SHALL NOT BE ROUTED DIRECTLY OVER ELECTRICAL EQUIPMENT. COORDINATE WITH ELECTRICAL CONTRACTOR FOR ALL REQUIRED CLEARANCES PRIOR TO INSTALLATION.
10. PROVIDE INSULATED ACCESS DOORS FOR DUCTWORK DOWNSTREAM OF AIR HANDLING UNITS AT EVERY 20'-0" TO FACILITATE DUCT CLEANING. PROVIDE ACCESS DOORS WITHIN 5'-0" OF EACH ELBOW.
11. PROVIDE RECTANGULAR BRANCH TAP FOR ALL RECTANGULAR DUCT CONNECTIONS TO RECTANGULAR DUCT TRUNKS. RE: DETAIL 2/M601.
12. PROVIDE REMOTE SPIN-IN DAMPER OPERATOR FOR SPIN-IN CONNECTIONS AND VOLUME DAMPERS LOCATED OVER GYPSUM CEILINGS. RE: DETAIL 4/M601.
13. THERMOSTAT SHALL HAVE CAPABILITY TO SET BACK OR SHUT DOWN THE SYSTEM BASED ON DAY OF THE WEEK AND THE TIME OF THE DAY, AND PROVIDE A READILY ACCESSIBLE MANUAL OVERRIDE THAT WILL RETURN TO THE PRESETBACK OR SHUTDOWN SCHEDULE WITHOUT REPROGRAMMING.
14. ZONE THERMOSTAT CONTROL SHALL PROVIDE A TEMPERATURE RANGE OR DEADBAND OF AT LEAST 5°F WITHIN WHICH THE SUPPLY OF HEATING AND COOLING ENERGY TO THE ZONE IS CAPABLE OF BEING SHUT OFF OR REDUCED TO A MINIMUM.
15. CONTRACTOR SHALL PROVIDE ACCESS PANEL FOR MAINTENANCE OF EXHAUST FANS AND ELECTRICAL COMPONENTS ASSOCIATED WITH ALL FOU'S. ACCESS PANEL SHALL BE LOCATED ABOVE THE CEILING AND SHALL BE FIRE RATED TO MATCH WALL CONSTRUCTION. FIELD COORDINATE EXACT LOCATION OF ACCESS PANEL PRIOR TO INSTALLATION. COORDINATE WITH MANUFACTURER'S SPECS FOR SIZE OF ACCESS PANEL.

DBR
9601 McAllister Freeway, Suite 410
San Antonio, Texas 78216
210.546.0200 v 210.546.0201 f
TBPE Firm Registration NO. 2234

DBR Project Number 196023.000

JC	BV	CL	WJ	MC

PROFESSIONAL SEAL

NOT FOR CONSTRUCTION OR PERMITTING; PRINTED FOR REVIEW ONLY
01/14/2020
M. JACQUELINE CHANG, P.E.
TEXAS #124697

LOGO/CONTACT

martinez ARCHITECTS
Martinez Architect, LP
900 Rockmead, Suite 250
Houston, Texas 77339
281.346.7371

DESIGN TEAM

Architectural
Martinez Architects

Civil Engineer
Maverick Engineering

Structural
Matrix Structural Engineers

MEP
DBR

Landscaping
KDC Associates

FIRE STATION #5
CITY OF MIDLAND
2200 W GOLF COURSE RD
MIDLAND, TX 79701

PROJECT No: MA 18017
DATE: 01/14/2020

No.	Date	Description

MECHANICAL SYMBOLS AND ABBREVIATIONS

M001

4.1306

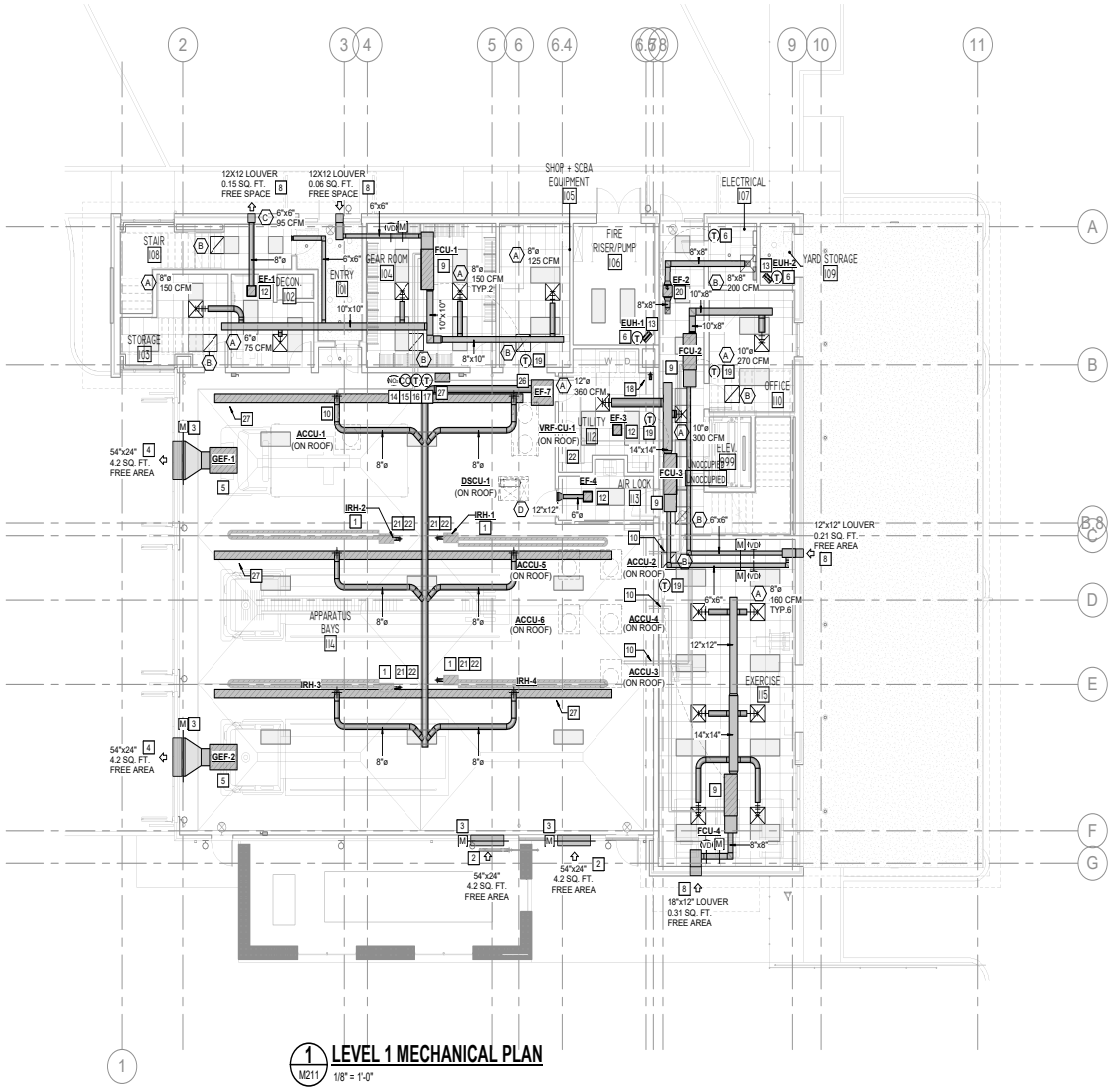

1 LEVEL 1 MECHANICAL PLAN
M211 — 1/8" = 1'-0"

23 VERTICAL SUCTION RAIL PROVIDED AND INSTALLED BY MAGNEGRIP. MAGNEGRIP TO COORDINATE LOCATION WITH OWNER'S EQUIPMENT. BOTTOM OF RAILS TO BE INSTALLED AT 12'-4" A.F.F..

24 EXTEND 8"ø DUCT DOWN AND CONNECT TO TOP OF HORIZONTAL SUCTION RAIL.

25 ROUTE EXHAUST DUCT AS HIGH AS POSSIBLE.

26 PROVIDE INLINE VEHICLE EXHAUST FAN AS SCHEDULED. SUSPEND FROM STRUCTURE ABOVE. EXTEND DISCHARGE DUCT THROUGH EXTERIOR WALL AND TERMINATE WITH WALL CAP. SEAL PENETRATION WEATHER-TIGHT. BOTTOM OF FAN SHALL BE MOUNTED AT 15'-6" A.F.F..

27 PROVIDE MAGNEGRIP CONTROL PANEL ON WALL IN APPROXIMATE LOCATION SHOWN. ALL CONTROL WIRING FROM PANEL TO DUCT MOUNTED SENSOR SHALL BE ROUND IN 3/4" EMT CONDUIT BY MAGNEGRIP INSTALLER.

MECHANICAL KEYED NOTES:

1 PROVIDE GAS INFRARED HEATER AT APPROXIMATE LOCATION. MOUNT HEATER AS HIGH AS POSSIBLE BELOW STRUCTURE. COORDINATE EXACT LOCATION WITH ARCHITECT TO AVOID CONFLICT. ROUTE X" ROUND FLUE FROM HEATER UP THROUGH ROOF AND TERMINATE 3'-0" ABOVE ROOF WITH ROOF CAP. SLOPE OF FLUE SHALL NOT BE MORE THAN 45° FROM VERTICAL. RE: DETAILS 15&16/M601.

2 PROVIDE RUSKIN ELF375DX INTAKE AIR LOUVER WITH A FREE AREA AS INDICATED. COORDINATE EXACT LOUVER DIMENSIONS, LOCATION, AND FINISH WITH ARCHITECT. INTAKE LOUVER SHALL BE PROVIDED WITH A MINIMUM OF 18" DEEP PLENUM, FULL SIZE IN WIDTH AND HEIGHT OF LOUVER UNLESS NOTED OTHERWISE. INTAKE LOUVER SHALL BE INSTALLED A MINIMUM OF 10'-0" FROM EXHAUST OUT OF BUILDING. RE: 18/M601.

3 INTERLOCK MOTORIZED DAMPER WITH ASSOCIATED EXHAUST FANS SUCH THAT DAMPER SHALL BE OPEN WHEN FAN IS ENERGIZED AND SHUT WHEN FAN IS DE-ENERGIZED.

4 PROVIDE RUSKIN ELF375DX EXHAUST AIR LOUVER WITH DIMENSIONS AND FREE AREA AS INDICATED. EXHAUST LOUVER SHALL BE PROVIDED WITH A MINIMUM OF 18" DEEP PLENUM, FULL SIZE IN WIDTH AND HEIGHT OF LOUVER UNLESS NOTED OTHERWISE. RE: 17/M601.

5 PROVIDE INLINE EXHAUST FAN AS SCHEDULED, AT APPROXIMATE LOCATION SHOWN. INSTALL PER MANUFACTURER SPECIFICATION. COORDINATE EXACT LOCATION WITH ARCHITECT. PROVIDE TRANSITIONS AS REQUIRED. COVER INLET OF FAN WITH HARDWARE CLOTH. RE: DETAIL 9/M602.

6 LOCATE THERMOSTAT AS SHOWN. MOUNT AT SAME ELEVATION AS LIGHT SWITCHES. COORDINATE EXACT LOCATION WITH ARCHITECT.

7 ROUTE CONDENSATE TO FLOOR DRAIN/TAILPIECE AT LOCATION SHOWN. REFER TO PLUMBING FOR EXACT LOCATION. UNLESS NOTED OTHERWISE, SIZE CONDENSATE PER MANUFACTURER'S RECOMMENDATION. RE: DETAIL 7/M601.

8 PROVIDE RUSKIN ELF375DX INTAKE/EXHAUST AIR LOUVER WITH DIMENSIONS AND FREE AREA AS INDICATED. LOUVER SHALL BE PROVIDED WITH A MINIMUM OF 18" DEEP PLENUM, FULL SIZE IN WIDTH AND HEIGHT OF LOUVER UNLESS NOTED OTHERWISE. RE: 18/M601 FOR INTAKE & 17/M601 FOR EXHAUST.

9 PROVIDE NEW, HORIZONTAL FAN COIL UNIT AS SCHEDULED AT LOCATION SHOWN. SUSPEND FAN COIL UNIT FROM STRUCTURE. PROVIDE FLEXIBLE CONNECT AT UNIT DISCHARGE. PROVIDE ALL CLEARANCES AND ACCESS AS RECOMMENDED BY THE MANUFACTURER. RE: DETAIL 13/M601.

10 ROUTE REFRIGERANT PIPING DOWN THROUGH ROOF TO ASSOCIATED FAN COIL UNIT. SIZE PER MANUFACTURERS RECOMMENDATION. CONTRACTOR TO VERIFY EXACT ROUTING. RE: DETAILS 14/M601& 2,3,4/M604.

11 PROVIDE RETURN AIR BOOT IN LOCATION SHOWN. SIZE AS INDICATED ON PLANS. RE: DETAILS 8, 9, 10/M601.

12 PROVIDE CEILING MOUNTED EXHAUST FAN AS SCHEDULED IN APPROXIMATE LOCATION SHOWN. RE: DETAIL 19/M601.

13 PROVIDE ELECTRIC UNIT HEATER AT APPROXIMATE LOCATION SHOWN. MOUNT HEATER 12" BELOW CEILING OR MAXIMUM MOUNT HEIGHT. FIELD COORDINATE EXACT LOCATION TO AVOID CONFLICTS WITH ADJACENT EQUIPMENT. RE: DETAIL 8/M602.

14 PROVIDE NO2 (NITROGEN DIOXIDE) DETECTOR, HONEYWELL ANALYTICS E3POINT WITH MOTOR STARTER, WITH A BATTERY BACK-UP AND TEST BUTTON AT SAME ELEVATION AS LIGHT SWITCHES. COORDINATE EXACT LOCATION WITH ARCHITECT PRIOR TO CONSTRUCTION TO AVOID CONFLICTS. GEF-1 & GEF-2 SHALL RAMP UP TO MAXIMUM AIRFLOW RATE AND A VISUAL AND AUDIBLE ALARM WILL SIGNAL WHEN THE NO2 DETECTOR DETECTS A CONCENTRATION OF 50 PARTS PER MILLION OF NO2. NO2 DETECTORS SHALL BE INSTALLED IN ACCORDANCE WITH MANUFACTURER'S RECOMMENDATIONS.

15 PROVIDE CO (CARBON MONOXIDE) DETECTOR, HONEYWELL ANALYTICS E3POINT WITH MOTOR STARTER, WITH A BATTERY BACK-UP AND TEST BUTTON AT SAME ELEVATION AS LIGHT SWITCHES. COORDINATE EXACT LOCATION WITH ARCHITECT PRIOR TO CONSTRUCTION TO AVOID CONFLICTS. GEF-1 & GEF-2 SHALL RAMP UP TO MAXIMUM AIRFLOW RATE AND A VISUAL AND AUDIBLE ALARM WILL SIGNAL WHEN THE CO DETECTOR DETECTS A CONCENTRATION OF 50 PARTS PER MILLION (ADJ) OF CO. CO DETECTORS SHALL BE INSTALLED IN ACCORDANCE WITH MANUFACTURER'S RECOMMENDATIONS.

16 PROVIDE WALL MOUNTED APPARATUS BAY EXHAUST CONTROLLER, HONEYWELL ANALYTICS E301C OR EQUAL, AT SAME ELEVATION AS LIGHT SWITCHES. COORDINATE EXACT LOCATION WITH ARCHITECT PRIOR TO CONSTRUCTION TO AVOID CONFLICT. CONTROLLER SHALL MODULATE THE FAN SPEED OF GEF-1 AND GEF-2 FROM MINIMUM TO MAXIMUM SPEED BASED ON SIGNAL FROM CO/NO2 SENSOR OR WHEN TEMPERATURE EXCEEDS 85°F (ADJ). EXHAUST FAN SHALL OPERATE CONTINUOUSLY AT MINIMUM SPEED. UPON DETECTION OF CO OR NO2 CONCENTRATIONS ABOVE ASSOCIATED HIGH LIMITS, THE EXHAUST FANS SHALL OPERATE AT DESIGN MAXIMUM AIRFLOW RATES.

17 TIE ALL GAS INFRARED HEATERS TOGETHER AND LOCATE THERMOSTAT ON WALL AS SHOWN. MOUNT AT SAME ELEVATION AS LIGHT SWITCHES THERMOSTAT SHALL ENERGIZE HEATER TO MAINTAIN TEMPERATURE AT 60°F (ADJUSTABLE).

18 ROUTE RIGID METAL EXHAUST DUCT TO EXHAUST VENT CAP. VENT CAP TO BE AIR KING PWC6R OR ARCHITECT SPECIFIED EQUIVALENT. PROVIDE TRANSITIONS AS REQUIRED. RE: DETAIL 5/M602.

19 LOCATE THERMOSTAT AS SHOWN. THERMOSTAT MODEL HONEYWELL VISION PRO 8000 MOUNT AT SAME ELEVATION AS LIGHT SWITCHES. COORDINATE EXACT LOCATION WITH ARCHITECT.

20 PROVIDE INLINE EXHAUST FAN AS SCHEDULED. DISCHARGE SHALL TERMINATE ABOVE PLENUM. RE: DETAIL 7/M602.

21 ROUTE 4" DIAMETER COMBUSTION AIR INTAKE UP THROUGH ROOF. PROVIDE WITH COMBUSTION AIR INTAKE KIT. INSTALL PER MANUFACTURER'S SPECIFICATIONS. RE: DETAIL 15/M601.

22 ROUTE 4" DIAMETER VENT UP THROUGH ROOF. PROVIDE WITH VENT ADAPTOR. INSTALL PER MANUFACTURER'S SPECIFICATIONS. ROUTE 3/4" CONDENSATE DRAIN FROM CLEAN OUT TO SINK TAIL PIECE. COORDINATE WITH PLUMBING, RE: DETAIL 15&16/M601.

TRUE NORTH / PROJECT NORTH

DBR
9601 McAllister Freeway, Suite 410
San Antonio, Texas 78216
210.546.0200 p
210.546.0201 f
TBPE Firm Registration No. 2234

DBR Project Number 196023.000

JC	BV	CL	WJ	MC

PROFESSIONAL SEAL

NOT FOR CONSTRUCTION OR PERMITTING; PRINTED FOR REVIEW ONLY
01/14/2020
M. JACQUELINE CHANG, P.E.
TEXAS #124987

LOGO/CONTACT

martinez ARCHITECTURE
Martinez Architect, LP
900 Rockmead, Suite 250
Houston, Texas 77339
281.346.7371

DESIGN TEAM

Architectural
Martinez Architects

Civil Engineer
Maverick Engineering

Structural
Matrix Structural Engineers

MEP/T
DBR

Landscape Architect
KDC Associates

-
Consultant 5 Name

FIRE STATION #5
CITY OF MIDLAND
2210 W GOLF COURSE RD
MIDLAND, TX 79701

PROJECT No: MA 18017
DATE: 01/14/2020

No.	Date	Description

LEVEL 1 MECHANICAL PLAN

M211

4.1307

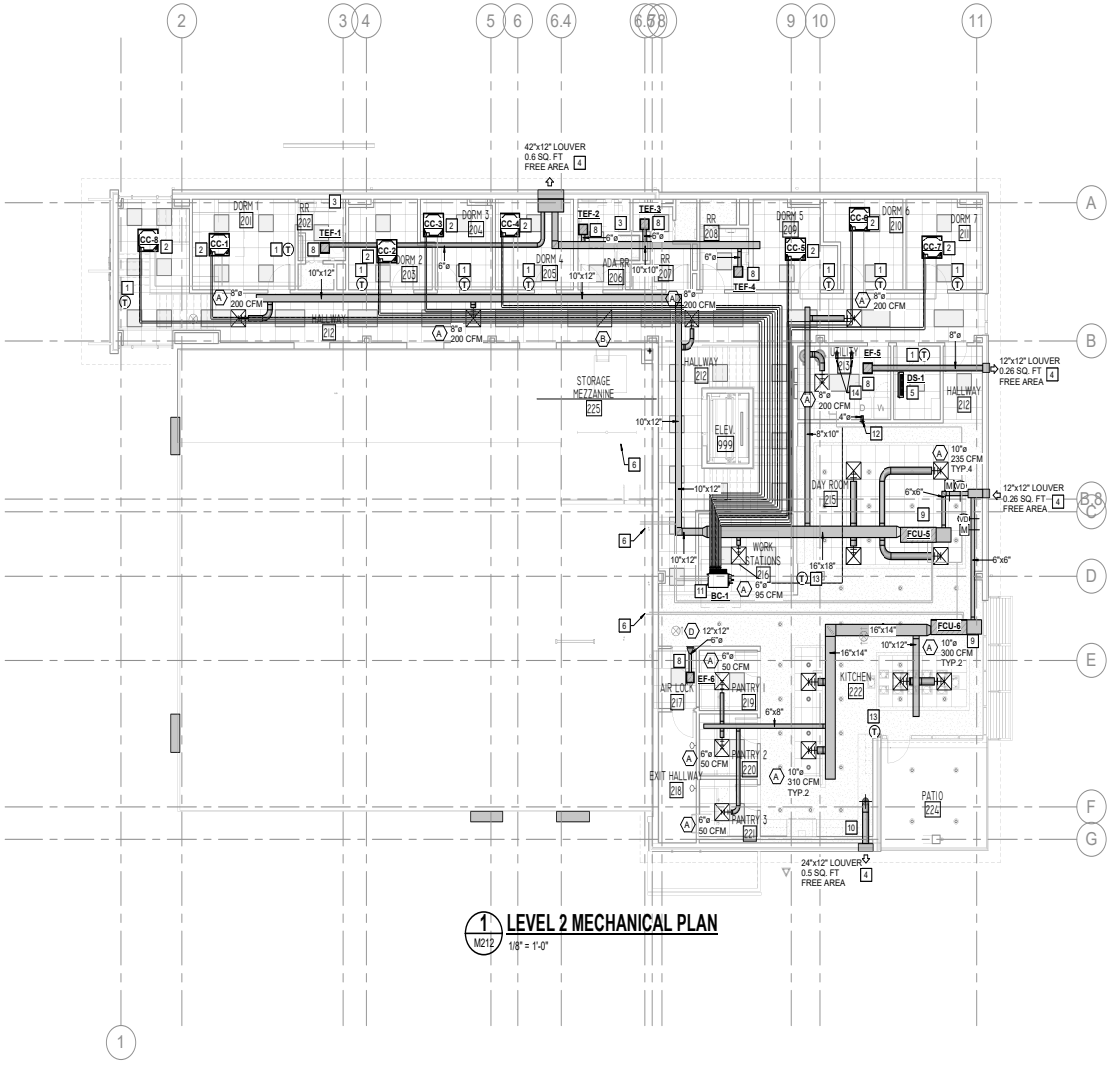

1 M212 **LEVEL 2 MECHANICAL PLAN**

1/8" = 1'-0"

MECHANICAL KEYED NOTES:

1. LOCATE THERMOSTAT AS SHOWN. MOUNT AT SAME ELEVATION AS LIGHT SWITCHES. COORDINATE EXACT LOCATION WITH ARCHITECT.
2. PROVIDE CEILING MOUNTED CASSETTE AS SCHEDULED IN LOCATION SHOWN. INSTALL PER MANUFACTURER'S RECOMMENDATION.
3. ROUTE CONDENSATE TO FLOOR DRAIN/TAILPIECE AT LOCATION SHOWN. REFER TO PLUMBING FOR EXACT LOCATION. UNLESS NOTED OTHERWISE, SIZE CONDENSATE PER MANUFACTURER'S RECOMMENDATION. RE: DETAIL 7/M601.
4. PROVIDE RUSKIN ELF375DX INTAKE/EXHAUST AIR LOUVER WITH DIMENSIONS AND FREE AREA AS INDICATED. LOUVER SHALL BE PROVIDED WITH A MINIMUM OF 18" DEEP PLENUM, FULL SIZE IN WIDTH AND HEIGHT OF LOUVER UNLESS NOTED OTHERWISE. RE: 18/M601 FOR INTAKE & 17/M601 FOR EXHAUST.
5. PROVIDE WALL MOUNTED DUCTLESS UNIT AT APPROXIMATE LOCATIONS SHOWN.
6. ROUTE REFRIGERANT PIPING DOWN THROUGH ROOF TO ASSOCIATIVE FAN COIL UNIT. SIZE PER MANUFACTURERS RECOMMENDATION. CONTRACTOR TO VERIFY EXACT ROUTING. RE: DETAILS 3&4/M602.
7. PROVIDE RETURN AIR BOOT IN LOCATION SHOWN. SIZE AS INDICATED ON PLANS. RE: DETAILS 8, 9, 10/M601.
8. PROVIDE CEILING MOUNTED EXHAUST FAN AS SCHEDULED IN APPROXIMATE LOCATION SHOWN. RE: DETAIL 19/M601.
9. PROVIDE NEW HORIZONTAL FAN COIL UNIT AS SCHEDULED AT LOCATION SHOWN. SUSPEND FAN COIL UNIT FROM STRUCTURE. PROVIDE FLEXIBLE CONNECT AT UNIT DISCHARGE. PROVIDE ALL CLEARANCES AND ACCESS AS RECOMMENDED BY THE MANUFACTURER. RE: DETAIL 13/M601.
10. CONNECT 10"Ø EXHAUST TO RANGE HOOD. CONFIRM FINAL HOOD CONNECTION AND PROVIDE TRANSITIONS AS REQUIRED. WRAP ENTIRE DUCT AND LOUVER PLENUM WITH 3M TWO-HOUR RATED FIRE WRAP, SIMILAR TO MODEL 615+.
11. PLACE HEAT RECOVERY BOX IN APPROXIMATE AREA SHOWN.
12. ROUTE 4" RIGID METAL EXHAUST DUCT TO EXHAUST VENT CAP. VENT CAP TO BE AIR KING PWC6R OR ARCHITECT SPECIFIED EQUIVALENT. PROVIDE TRANSITIONS AS REQUIRED. RE: DETAILS 5/M602.
13. LOCATE THERMOSTAT AS SHOWN. THERMOSTAT MODEL HONEYWELL VISION PRO 8000 MOUNT AT SAME ELEVATION AS LIGHT SWITCHES. COORDINATE EXACT LOCATION WITH ARCHITECT.
14. ROUTE CONCENTRIC INTAKE AND EXHAUST VENT FOR GAS WATER HEATER TO THE SIDE OF THE BUILDING AND CONNECT TO VENT KIT PROVIDED BY MANUFACTURER.

TRUE NORTH

PROJECT NORTH

DBR
9601 McAllister Freeway, Suite 410
San Antonio, Texas 78216
210.546.0200 p
210.546.0201 f
TBPE Firm Registration No. 2234

DBR Project Number 196023.000

JC	BV	CL	WJ	MC

PROFESSIONAL SEAL

NOT FOR CONSTRUCTION OR PERMITTING; PRINTED FOR REVIEW ONLY
01/14/2020
M. JACQUELINE CHANG, P.E.
TEXAS #124887

LOGO/CONTACT

martinez ARCHITECTS
Martinez Architect, LP
900 Rockmead, Suite 250
Houston, Texas 77339
281.346.7371

DESIGN TEAM

Architectural
Martinez Architects

Civil Engineer
Maverick Engineering

Structural
Matrix Structural Engineers

MIE/P/T
DBR

Landscape Architect
KDC Associates

-
Consultant 5 Name

FIRE STATION #5
CITY OF MIDLAND
2210 W GOLF COURSE RD
MIDLAND, TX 79701

PROJECT No: **MA 18017**
DATE: **01/14/2020**

No.	Date	Description

LEVEL 2 & 3 MECHANICAL PLAN

M212

4.1308

VRF INDOOR UNITS SCHEDULE

MARK	AREA SERVES	TYPE	SUPPLY AIR CFM	OUTSIDE AIR CFM	ESP (IN. WG) (AVAILABLE)	COOLING TEMPERATURE (°F) ENTERING AIR DB	COOLING TEMPERATURE (°F) ENTERING AIR WB	COOLING TOTAL CAPACITY (MBH)	COOLING SENSIBLE CAPACITY (MBH)	HEATING TEMPERATURE (°F) ENTERING AIR DB	HEATING MBH	Electrical VOLTAGE / PHASE / HZ	Electrical MCA	Electrical MOCP	WEIGHT (LBS)	MODEL NUMBER	MANUFACTURER	REMARKS
CC-1	DORM 1	CEILING CASSETTE 4 WAY	307	10	0.25	70.4	59.7	6.1	4.3	70.2	3.2	208/1/60	0.3	15	45	FXAQ	DAIKIN	1, 2, 3
CC-2	DORM 2	CEILING CASSETTE 4 WAY	300	10	0.25	70.4	59.7	4.7	3.7	70.2	2.9	208/1/60	0.3	15	45	FXAQ	DAIKIN	1, 2, 3
CC-3	DORM 3	CEILING CASSETTE 4 WAY	300	10	0.25	70.4	59.7	4.7	3.7	70.2	2.9	208/1/60	0.3	15	45	FXAQ	DAIKIN	1, 2, 3
CC-4	DORM 4	CEILING CASSETTE 4 WAY	300	10	0.25	70.4	59.7	4.7	3.7	70.2	3	208/1/60	0.3	15	45	FXAQ	DAIKIN	1, 2, 3
CC-5	DORM 5	CEILING CASSETTE 4 WAY	300	10	0.25	70.4	59.7	4.7	3.7	70.2	2.3	208/1/60	0.3	15	45	FXAQ	DAIKIN	1, 2, 3
CC-6	DORM 6	CEILING CASSETTE 4 WAY	300	10	0.25	70.4	59.7	4.7	3.7	70.2	2.3	208/1/60	0.3	15	45	FXAQ	DAIKIN	1, 2, 3
CC-7	DORM 7	CEILING CASSETTE 4 WAY	300	10	0.25	70.4	59.7	4.7	3.7	70.2	2.4	208/1/60	0.3	15	45	FXAQ	DAIKIN	1, 2, 3
CC-8	STAIRWELL	CEILING CASSETTE 4 WAY	405	10	0.25	70.4	59.7	12	8.1	70.2	5	208/1/60	0.4	15	45	FXAQ	DAIKIN	1, 2, 3

NOTES:
1. ELECTRICAL TO PROVIDE DISCONNECT SWITCH.
2. REFRIGERANT PIPE SHALL BE SIZED BY THE MANUFACRTURER.
3. FOR CEILING MOUNTED NON-DUCTED INDOOR UNITS, PROVIDE DRAIN PUMP KIT .

GAS INFRA-RED RADIANT HEATER SCHEDULE

MARK	IRH-1	IRH-2	IRH-3	IRH-4
SERVES	APPARATUS BAYS	APPARATUS BAYS	APPARATUS BAYS	APPARATUS BAYS
FUEL TYPE	NATURAL GAS	NATURAL GAS	NATURAL GAS	NATURAL GAS
MAX. CAPACITY (MBH)	150	150	150	150
MIN. CAPACITY (MBH)	100	100	100	100
VOLTS/PHASE/HERTZ	115 / 1 / 60	115 / 1 / 60	115 / 1 / 60	115 / 1 / 60
MANUFACTURER	REZNOR	REZNOR	REZNOR	REZNOR
MODEL NUMBER	VPT150	VPT151	VPT152	VPT153
WEIGHT	100	101	102	103
NOTES	1, 2, 3, 4	1, 2, 3, 4	1, 2, 3, 4	1, 2, 3, 4

NOTES:
1. PROVIDE 120-VOLT WALL-MOUNTED 3 POSITION SWITCH WITH LOCKING COVER, LOW VOLTAGE CONTROL TRANSFORMER, UNIVERSAL WALL AND CEILING MOUNTED BRACKET, AUTOMATIC RESET THERMAL CUT-OUT, AND DISCONNECT SWITCH.
2. PROVIDE WITH TWO STAGE HEATING.
3. PROVIDE WITH OUTDOOR COMBUSTION AIR INLET KIT.
4. PROVIDE WITH A VENT KIT.

VRF OUTDOOR UNITS SCHEDULE

MARK	SERVES	COOLING TEMPERATURE (°F) OUTDOOR AMBIENT	COOLING CAPACITY NOMINAL MBH	COOLING CAPACITY ACTUAL MBH AT 105F	COOLING IEER	HEATING TEMPERATURE (°F) OUTDOOR AMBIENT	HEATING CAPACITY NOMINAL MBH AT 47 ° F	HEATING CAPACITY ACTUAL MBH	HEATING COP	REFRIGERANT REFRIGERANT TYPE	REFRIGERANT ADDITIONAL CHARGE	SOUND PRESSURE LEVEL dB (COOLING)	SOUND PRESSURE LEVEL dB (HEATING)	MODEL NUMBER	ELECTRICAL VOLTAGE / PHASE / HZ	ELECTRICAL MCA	ELECTRICAL BREAKER SIZE	ELECTRICAL MAXIMUM FUSE	WEIGHT GROSS	MANUFACTURER
VRF-CU-1	ALL CC UNITS	105	96.0	54.7	25.20	28.00	189	74.4	4.33	R-410A	11.7	78.0	78.0	REYQ72	208/3/60	38.1	45	45	750	DAIKIN

NOTES:
1. ALL SUCTION, LIQUID AND HOT GAS (ON HEAT RECOVERY UNITS) SHALL BE INSULATED WITH 1" ARMAFLEX INSULATION OR APPROVED EQUAL
2. REFRIGERANT PIPE SHALL BE SIZED BY THE MANUFACRTURER .
3. PROVIDE UNITS WITH PROTECTION NET FOR PROTECTION OF OUTDOOR UNIT HEAT EXCHANGER.
4. PROVIDE UNITS WITH HAIL PROTECTION HOOD FOR PROTECTING THE OU AIR INLET / OUTLET FROM HAIL.
5. IF THE CONDENSING UNIT REQUIRES MULITPLE POWER CONNECTIONS, MECHANICAL CONTRACTOR IS RESPONSIBLE FOR ADDITIONAL ELECTRICAL COSTS DUE TO ALTERNATE EQUIPMENT. REFER TO SCHEDULE.
6. THE SYSTEM SHALL USE VARIABLE FREQUENCY DRIVES ON THE COMPRESSOR AND CONDENSER FAN FOR MAXIMUM PART LOAD EFFICIENCY.
7. PROVIDE TIME DELAY RELAY FOR EACH CONDENSING UNIT TO ALLOW THEM TO START UP AFTER 10 SECONDS AND IN 10 SECOND INTERVALS IN THE EVENT OF A POWER LOSS.

DUCTLESS SPLIT A/C SCHEDULE

INDOOR UNIT	MARK	DS-1
	SERVES	IT
	SUPPLY AIR (CFM AT HIGH SPEED)	330
	TOTAL COOLING CAPACITY (MBH)	9.0
	MCA	NA
	VOLTS/PHASE/HERTZ	208/3/60
	MODEL NUMBER	FTKN09NMVJU
	NOTES	1, 2, 3, 4
OUTDOOR UNIT	MARK	DSCU-1
	SERVES	DS-1
	GRAND TOTAL COOLING (MBH)	9
	AMBIENT TEMP. (°F)	105
	S.E.E.R.	16
	E.E.R.	10.6
	MCA	7
	MOCP	15
	VOLTS/PHASE/HERTZ	208/3/60
	MODEL NUMBER	RKN09NMVJU
	NOTES	1, 2, 3, 4
	MANUFACTURER	DAIKIN

NOTES:
1. PROVIDE WITH SINGLE POINT POWER TO INCLUDE CONDENSING UNIT AND REMOTE THERMOSTAT. INDOOR UNIT SHALL BE POWERED FROM OUTDOOR UNIT.
2. INSTALL PER MANUFACTURERS SPECIFICATIONS. PROVIDE UNIT WITH LITTLE GIANT CONDENSATE PUMP MODEL VCMA-15ULS.
3. REFRIGERANT LINES TO BE SIZED BY MANUFACTURER.
4. PROVIDE TIME DELAY RELAY FOR THE CONDENSING UNIT TO ALLOW SYSTEM TO START UP AFTER 30 SECONDS IN THE EVENT OF A POWER LOSS.

VARIABLE REFRIGERANT FLOW HEAT RECOVERY BOX SCHEDULE

Tag	Ports	Capacity (MBH) Unit	Capacity (MBH) Port	MCA	Electrical MOCP	Electrical Voltage	Weight (Lbs)	Manuf.	Model	Notes
BC-1	8	230	60	0.8	15	208/1/60	80	DAIKIN	BS8Q54TVJ	ALL

Notes
1. CONTRACTOR TO SUPPLY AND INSTALL SINGLE POLE, DOUBLE THROW LIGHT SWITCH TYPE DISCONNECT ON EACH HEAT RECOVERY BOX THE INDOOR UNIT/HEAT RECOVERY BOXES AND THE OUTDOOR UNITS REQUIRE SEPARATE CIRCUITS
2. PROVIDE WITH GALVANIZED SHEET METAL FINISH AND SOUND ABSORBING THERMAL INSULATION (FLAME RESISTANT FOAM POLYETHYLENE)
3. Y-BRANCHES DOWNSTREAM OF A PORT TO ACCOMMODATE MORE THAN ONE INDOOR UNIT PER PORT IS NOT ACCEPTABLE UNLESS SPECIFICALLY DESIGNED ON THE PLANS
4. INDOOR UNITS CONNECTED TO THE HEAT RECOVERY BOX MUST BE ABLE TO INDEPENDENTLY HEAT OR COOL REGARDLESS OF MODE OF ANY OTHER INDOOR UNIT ON HRU.
5. CONTRACTOR TO FIELD INSTALL 2-POSITION ISOLATION VALVE (MIN. 800 PSI AND 300 F RATING) UPSTREAM OF HEAT RECOVERY BOX. INSTALL VALVE 6"-12" UPSTREAM IN AN ACCESSIBLE LOCATION AND PROVIDE ACCESS DOOR IF NECESSARY.
6. CONTRACTOR TO MAINTAIN SERVICE CLEARANCE OF 18" ON FRONT (ELECTRICAL CONNECTION), 12" ON SIDES AND 4" ON TOP. HEAT RECOVERY BOX TO HAVE TOP AND BOTTOM ACCESS.
7. PROVIDE WITH ONE YEAR PARTS AND LABOR WARRANTY AND ADDITIONAL ONE YEAR PARTS ONLY WARRANTY.
8. CONTRACTOR RESPONSIBLE FOR ANY COSTS INCURRED USING ALTERNATE MANUFACTURER HEAT RECOVERY BOX INCLUDING BUT NOT LIMITED TO ELECTRICAL, CONDENSATE PIPING, REFRIGERANT PIPING, OR STRUCTURAL CHANGES.
9. ELEVATION DIFFERENCE BETWEEN HEAT RECOVERY BOX AND INDOOR UNIT SHALL NOT EXCEED 49 FOOT.

ELECTRIC UNIT HEATER SCHEDULE

MARK	EUH -1	EUH -2
SERVES	RISER	YARD STORAGE
CFM	300	300
HEATING CAPACITY (MBH)	12,795	12,795
CAPACITY (KW)	3.75	3.75
DBA	51	51
VOLTS/PHASE/HERTZ	208/1/60	208/1/60
WEIGHT - LBS	20	20
MANUFACTURER	REZNOR	REZNOR
MODEL NUMBER	EGW-5	EGW-5
NOTES	1	1

NOTES:
1. PROVIDE WALL-MOUNTED THERMOSTAT, LOW VOLTAGE CONTROL TRANSFORMER, UNIVERSAL WALL AND CEILING MOUNTED BRACKET, AUTOMATIC RESET THERMAL CUT-OUT, ADJUSTABLE DISCHARGE LOUVER, REMOTE SUMMER FAN SWITCH, FAN DELAY, AND DISCONNECT SWITCH.

DBR
9601 McAllister Freeway, Suite 410
San Antonio, Texas 78216
210.546.0200 v 210.546.0201 f
TBPE Firm Registration NO. 2234

DBR Project Number 196023.000

JC	BV	CL	WJ	MC

PROFESSIONAL SEAL

NOT FOR CONSTRUCTION OR PERMITTING; PRINTED FOR REVIEW ONLY
07/14/2020
M. JACQUELINE CHANG, P.E.
TEXAS #124697

LOGO/CONTACT

martinez ARCHITECTS
Martinez Architect, LP
900 Rockmead, Suite 250
Houston, Texas 77339
281.346.7371

DESIGN TEAM

Architectural
Martinez Architects

Civil Engineer
Maverick Engineering

Structural
Matrix Structural Engineers

MEP
DBR

Landscaping
KDC Associates

FIRE STATION #5
CITY OF MIDLAND
2200 W GOLF COURSE RD
MIDLAND, TX 79701

PROJECT No: MA 18017
DATE: 01/14/2020

No.	Date	Description

MECHANICAL SCHEDULES

M501

4.1309

DX FAN COIL UNIT SCHEDULE

	MARK	FCU-1	FCU-2	FCU-3	FCU-4	FCU-5	FCU-6
FAN	SERVES	ENTRY/GEAR RM	OFFICE	UTILITY	EXERCISE	DAY ROOM	KITCHEN
	TYPE	DIRECT DRIVE/ECM	DIRECT DRIVE/ECM	DIRECT DRIVE/ECM	DIRECT DRIVE/ECM	DIRECT DRIVE/ECM	DIRECT DRIVE/ECM
	SUPPLY AIR (CFM)	745	270	660	960	2,035	1,370
	OUTDOOR AIR (CFM)	60	85	120	305	130	130
	FAN TYPE	FORWARD CURVE	FORWARD CURVE	FORWARD CURVE	FORWARD CURVE	FORWARD CURVE	FORWARD CURVE
	FAN SPEED	MEDIUM-LOW	MEDIUM-LOW	MEDIUM-LOW	MEDIUM-LOW	MEDIUM-LOW	MEDIUM-LOW
	EXT. S.P. (IN. W.G.)	0.75	0.75	0.75	0.75	0.75	0.75
	VOLTS/PHASE/HERTZ	208/1/60	208/1/60	208/1/60	208/1/60	208/1/60	208/1/60
	FAN MOTOR HORSEPOWER	1	1/2	1/2	1	1	1
DX COOLING COIL	MAX. COIL FACE VELOCITY (FPM)	500	500	500	500	500	500
	MIN. ROWS/MAX. FINS PER INCH	4/12	4/12	4/12	4/12	4/12	4/12
	COIL CFM	745	270	660	960	2,035	1,370
	EAT DB/WB (°F)	76.0/62.2	74.8/61.6	74.7/61.5	73.8/61.1	75.5/62	75.4/61.9
	LAT DB/WB (°F)	51.8/51.5	51.1/51.1	51.0/51.0	50.6/50.4	51.6/51.3	51.5/51.2
	TOTAL COOLING CAPACITY (MBH)	31.94	18.82	18.80	31.42	32.76	31.80
	SENSIBLE COOLING CAPACITY (MBH)	27.26	17.04	17.03	26.23	27.58	26.98
	REFRIGERANT TYPE	R410A	R410A	R410A	R410A	R410A	R410A
ELECTRIC RE-HEAT	MAX. COIL FACE VELOCITY (FPM)	700	700	700	700	700	700
	ELEMENT TYPE	OPEN	OPEN	OPEN	OPEN	OPEN	OPEN
	EAT (°F)	67.4	63.3	67.6	67.4	67.4	67.4
	LAT (°F)	92.9	98.4	85.6	87.2	76.7	81.2
	ACTUAL KW	8.0	4.0	5.0	8.0	8.0	8.0
	INPUT KW	6.0	3.0	3.8	6.0	6.0	6.0
	STEPS CONTROL	1	1	1	1	1	1
	VOLTS/PHASE/HERTZ	208/3/60	208/1/60	208/1/60	208/3/60	208/3/60	208/3/60
MCA		26	23	28	26	26	26
MOCP		30	25	30	30	30	30
MANUFACTURER		LENNOX	LENNOX	LENNOX	LENNOX	LENNOX	LENNOX
MODEL NUMBER		CBX27UH-036	CBX27UH-030	CBX27UH-018	CBX27UH-036	CBX27UH-036	CBX27UH-036
UNIT WEIGHT (LBS)		160	160	160	160	160	160
NOTES		1,2,3,4	1,2,3,4	1,2,3,4	1,2,3,4	1,2,3,4	1,2,3,4

NOTES:
1. EXTERNAL STATIC PRESSURE DOES NOT ACCOUNT FOR LOSSES DUE TO COIL(S), FILTERS, HOUSING, NOR ACCESSORIES.
2. PROVIDE UNIT WITH HORIZONTAL DISCHARGE.
3. PROVIDE FILTERS WITH MINIMUM EFFICIENCY OF MERV 8.
4. PROVIDE UNIT WITH SINGLE POINT ELECTRICAL CONNECTION.

AIR COOLED CONDENSING UNIT SCHEDULE

MARK	ACCU-1	ACCU-2	ACCU-3	ACCU-4	ACCU-5	ACCU-6
SERVES	FCU-1	FCU-2	FCU-3	FCU-4	FCU-5	FCU-6
UNIT SIZE	3 TON	1.5 TON	1.5 TON	3 TON	3 TON	3 TON
NET TOTAL COOLING CAPACITY (MBH)	29.13	19.18	20.27	28.42	29.58	28.93
AMBIENT TEMP. (°F)	100	100	100	100	100	100
REFRIGERANT TYPE	R-410A	R-410A	R-410A	R-410A	R-410A	R-410A
NUMBER STAGES OF COOLING	2	2	2	2	2	2
SEER (AT ARI)	15.00	16.00	16.00	15.00	15.00	15.00
EER (AT ARI)	-	-	-	-	-	-
MCA	16.2	12.4	12.4	16.2	16.2	16.2
MOCP	25	20	20	25	25	25
VOLTS/PHASE/HERTZ	208/3/60	208/1/60	208/1/60	208/3/60	208/3/60	208/3/60
MANUFACTURER	LENNOX	LENNOX	LENNOX	LENNOX	LENNOX	LENNOX
MODEL NUMBER	SSB036H4-230	14ACXS018-230	14ACXS018-230	SSB036H4-230	SSB036H4-230	SSB036H4-230
UNIT WEIGHT (LBS)	245	140	140	245	245	245
NOTES	1,2,3	1,2,3	1,2,3	1,2,3	1,2,3	1,2,3

NOTES:
1. INSTALL PER MANUFACTURER'S SPECIFICATIONS.
2. MOUNT ON 6" HOUSEKEEPING PAD.
3. PROVIDE ALL CLEARANCES AS REQUIRED BY EQUIPMENT MANUFACTURER.

FAN SCHEDULE

MARK	EF-1	EF-2	EF-3	EF-4	EF-5	EF-6	EF-7	GEF-1, GEF-2
SERVES	DECONTAMINATION 102	ELECTRICAL 107	UTILITY 112	AIRLOCK 113	UTILITY 213	AIRLOCK 217	VEHICLE EXHAUST	APPARATUS BAY 114
TYPE / DRIVE	CEILING / DIRECT	INLINE / BELT	CEILING / DIRECT	CEILING / DIRECT	CEILING / DIRECT	CEILING / DIRECT	INLINE/BELT	INLINE / BELT
CFM (MAX / MIN)	150	200	300	65	200	65	2100	(3,200 / 1,000)
EXT. S.P. (IN. W.G.)	0.30	0.30	0.25	0.30	0.25	0.30	6.00	0.25
FAN RPM	900	1,342	950	900	950	900	3,450	688
SONES (MAX.)	2	7.2	3	0.5	0.6	0.5	21	11.5
VOLTS/PHASE/HERTZ	115/1/60	115/1/60	115/1/60	115/1/60	115/1/60	115/1/60	208/3/60	208/3/60
FLA		5.8		0.34	2	0.34		9.8
INPUT WATTS	141	--	143	15	61	15	--	--
MOTOR SIZE (HP)	--	1/4	--	--	--	--	3	1/2
UNIT WEIGHT - LBS	12	79	50	12	50	12	250	168
MANUFACTURER	GREENHECK	GREENHECK	GREENHECK	GREENHECK	GREENHECK	GREENHECK	MAGNEGRIP	GREENHECK
MODEL NUMBER	CSP-B150	BSQ-70-4	CSP-A390	SP-A90	CSP-A250	SP-A90	CF-363-3	BSQ-200
NOTES	1, 2	2, 4	1, 2	1, 2	1, 2	1, 2	3, 5	3

NOTES:
1. FAN SHALL BE INTERLOCKED WITH DEDICATED SWITCH IN ASSOCIATED ROOM. COORDINATE WITH ELECTRICIAN FOR WIRING REQUIREMENTS.
2. PROVIDE FAN WITH MOTOR RATED TOGGLE SWITCH AND BACKDRAFT DAMPER.
3. PROVIDE FAN WITH COMBINATION MOTOR STARTER/DISCONNECT SWITCH AND BACKDRAFT DAMPER. STARTER/DISCONNECT PROVIDED BY DIV. 23 INSTALLED BY 26.
4. FAN SHALL BE INTERLOCKED WITH WALL MOUNTED THERMOSTAT. FAN SHALL BE ENERGIZED WHEN SPACE TEMPERATURE REACHES 80 DEGREES F (ADJUSTABLE).

TOILET EXHAUST FAN SCHEDULE

MARK	TEF-1	TEF-2	TEF-3	TEF-4
SERVES	RR 202	RR 206	RR 207	RR 208
TYPE / DRIVE	CEILING / DIRECT	CEILING / DIRECT	CEILING / DIRECT	CEILING / DIRECT
CFM (MAX / MIN)	65	65	65	65
EXT. S.P. (IN. W.G.)	0.30	0.30	0.83	0.75
FAN RPM	900	900	1,000	900
SONES (MAX.)	0.5	0.5	5	4.5
VOLTS/PHASE/HERTZ	115/1/60	115/1/60	115/1/60	115/1/60
FLA	0.34	0.34	0.77	0.43
INPUT WATTS	15	15	83	46
UNIT WEIGHT - LBS	12	12	24	24
MANUFACTURER	GREENHECK	GREENHECK	GREENHECK	GREENHECK
MODEL NUMBER	SP-A90	SP-A90	SP-A250	SP-A200
NOTES	1, 2	1, 2	1, 2	1, 2

NOTES:
1. FAN SHALL BE INTERLOCKED WITH DEDICATED SWITCH IN ASSOCIATED ROOM. COORDINATE WITH ELECTRICIAN FOR WIRING REQUIREMENTS.
2. PROVIDE FAN WITH MOTOR RATED TOGGLE SWITCH AND BACKDRAFT DAMPER.

AIR DEVICE SCHEDULE

MARK	MFR. & MODEL	TYPE	REMARKS
A	TITUS - TMS-AA	LOUVERED FACE SUPPLY AIR DIFFUSER	24"x24" FACE, ALUMINUM CONSTRUCTION WITH FRAME FOR LAY-IN CEILING OR SURFACE MOUNT. REFER TO PLANS FOR CEILING TYPE.
B	TITUS - PAR-AA	24"x24" PERFORATED FACE RETURN / EXHAUST AIR GRILLE	ALUMINUM CONSTRUCTION WITH FRAME FOR LAY-IN CEILING OR HARD CEILING, DEPENDING ON CEILING TYPE. REFER TO ARCHITECTURAL PLANS FOR CEILING TYPE; PROVIDE 22"x22" NECK OPEN TO PLENUM UNLESS OTHERWISE NOTED ON DRAWINGS. PROVIDE O.B.D. WHEN USED FOR DUCTED EXHAUST.
C	TITUS - 300FL	SIDEWALL SUPPLY AIR GRILLE	ALUMINUM CONSTRUCTION WITH FRAME FOR SURFACE MOUNT. 3/4" BLADE SPACING, DOUBLE DEFLECTION WITH FRONT BLADES PARALLEL TO LONG DIMENSION.
D	TITUS - 350FL	SIDEWALL RETURN / EXHAUST AIR GRILLE	STEEL CONSTRUCTION WITH FRAME FOR SURFACE MOUNT. 3/4" BLADE SPACING, 35° DEFLECTION WITH BLADES PARALLEL TO LONG DIMENSION. PROVIDE O.B.D. FOR DUCTED EXHAUST.

NOTES:
1. STANDARD WHITE FINISH FOR CEILING MOUNTED DEVICES UNLESS OTHERWISE NOTED. REFER TO ARCHITECTURAL DRAWINGS FOR SPECIFICATIONS. FINAL DEVICE COLOR SHALL BE COORDINATED WITH ARCHITECT PRIOR TO ORDERING.
2. PROVIDE FRAME TO MATCH CEILING TYPE INDICATED ON ARCHITECTS REFLECTED CEILING PLAN.
3. PAINT INTERIOR SURFACES OF DUCTWORK VISIBLE FROM FACE OF RETURN AIR GRILLES FLAT BLACK.

DBR
9601 McAllister Freeway, Suite 410
San Antonio, Texas 78216
210.546.0200 v 210.546.0201 f
TBPE Firm Registration NO. 2234

DBR Project Number 196023.000

JC	BV	CL	WJ	MC

PROFESSIONAL SEAL

NOT FOR CONSTRUCTION OR PERMITTING; PRINTED FOR REVIEW ONLY
01/14/2020
M. JACQUELINE CHANG, P.E.
TEXAS #124697

LOGO/CONTACT

martinez ARCHITECTS
Martinez Architect, LP
900 Rockmead, Suite 250
Houston, Texas 77339
281.346.7371

DESIGN TEAM

Architectural
Martinez Architects

Civil Engineer
Maverick Engineering

Structural
Matrix Structural Engineers

MEP
DBR

Landscaping
KDC Associates

FIRE STATION #5

CITY OF MIDLAND
2200 W GOLF COURSE RD
MIDLAND, TX 79701

PROJECT No: MA 18017
DATE: 01/14/2020

No.	Date	Description

MECHANICAL SCHEDULES

M502

4.1310

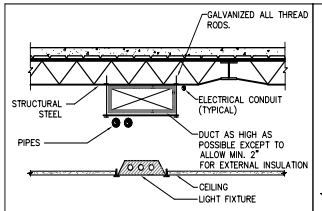

NOTES:
1. PIPES (INCLUDING SPRINKLER PIPING) AND ELECTRICAL CONDUIT CAN BE ROUTED BETWEEN JOISTS OR THROUGH JOIST WEB SPACE AS REQUIRED. DUCT SHALL BE LOCATED AS HIGH AS POSSIBLE.
2. U.L. DESIGN ASSEMBLY NUMBERS ARE SHOWN ON ARCHITECTURAL PLANS WHEN REQUIRED.
3. INSTALLATION OF ALL SERVICES MUST BE COORDINATED BY THE CONTRACTOR.

1 TYP. MEP INSTALLATION DETAIL
NOT TO SCALE

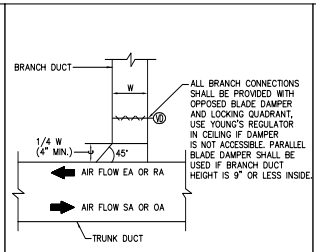

NOTE: THIS CONNECTION SHALL BE TYPICAL FOR ALL RECTANGULAR BRANCH DUCT CONNECTIONS TO RECTANGULAR TRUNK DUCTS, INCLUDING SUPPLY, RETURN, OUTSIDE AIR AND EXHAUST DUCTS.

2 RECTANGULAR BRANCH DUCT TAP
NOT TO SCALE

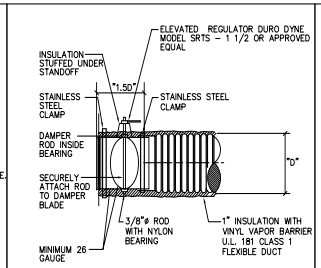

NOTE: 1. ALL FLEXIBLE DUCT OFFSETS AND BENDS SHALL MAINTAIN A RADIUS OF 1.5 X ("D") MINIMUM 3'–0" AND MAXIMUM 6'–0"
2.TYPICAL OF ROUND DUCT CONNECTIONS TO RECTANGULAR DUCTS
3.ALL JOINTS SHALL BE SEALED WITH MASTIC AND FIBER CLOTH PER SPECIFICATIONS.

3 SPIN-IN DETAIL
NOT TO SCALE

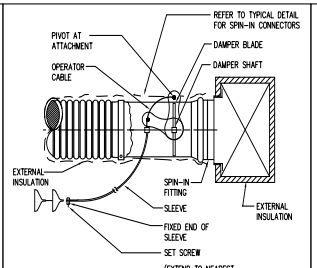

NOTE: MOUNT OPERATOR CRANK AND CABLE PLATFORM ON TOP OF EXTERNAL INSULATION AT DAMPER.

4 REMOTE SPIN-IN DAMPER OPERATOR
NOT TO SCALE

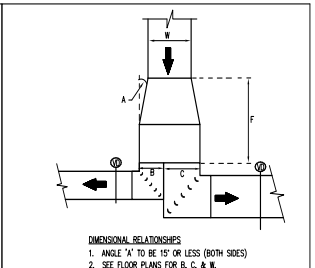

DIMENSIONAL RELATIONSHIPS
1. ANGLE 'A' TO BE 15° OR LESS (BOTH SIDES)
2. SEE FLOOR PLANS FOR B, C, & W.
3. VERTICAL DIMENSION TO BE MAINTAINED THRU F.
4. CHANGE IN VERTICAL DIMENSION TO OCCUR AFTER TURNS.

NOTE: VOLUME DAMPERS REQUIRED FOR LOW PRESSURE DUCT SYSTEMS ONLY.

5 DUCTWORK TEE DETAIL
NOT TO SCALE
MAGD303.DWG

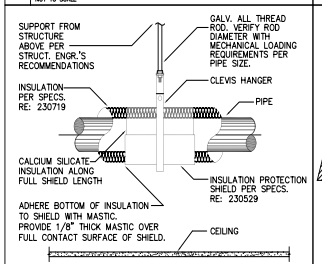

NOTE:
CONTRACTOR SHALL SECURE STRUCT. ENGR. APPROVAL FOR ANY AND ALL PIPE MOUNTING DETAILS TO CONCRETE OR STEEL STRUCTURE. CONTRACTOR SHALL CONFORM TO ALL MAXIMUM SPAN DISTANCES PER SPECIFICATIONS FOR HANGER SPACING. RE: 230529

6 PIPE HANGER DETAIL (1-PIPE)
NOT TO SCALE
MPHS102.DWG

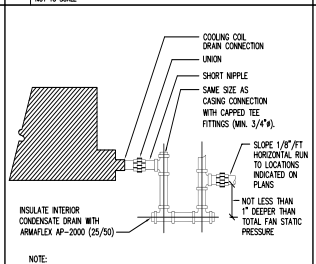

NOTE:
1. MAINTAIN MINIMUM 1" AIR GAP AT FLOOR DRAIN OR ROOF DRAIN.
2. ALL CONDENSATE DRAIN PIPING SHALL BE SCHEDULE 40 GALVANIZED STEEL WITH MALLEABLE IRON SCREWED FITTINGS.
3. PROVIDE CLEAN OUT FITTINGS AT ALL CHANGE OF DIRECTION IN DRAIN LINE(S).

7 COOLING COIL CONDENSATE DRAIN
NOT TO SCALE
MPCE300.DWG

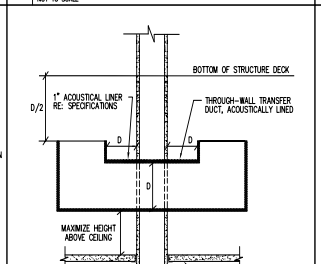

8 RETURN AIR BOOT THRU WALL
NOT TO SCALE
MARA.DWG

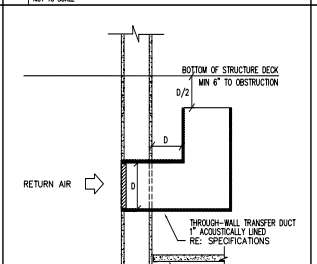

9 SIDEWALL REGISTER RETURN AIR BOOT
NOT TO SCALE

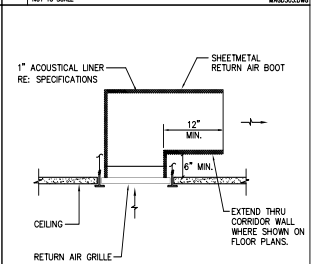

NOTE: TYPICAL FOR ALL RETURN AIR GRILLES

10 RETURN AIR BOOT AT GRILLE
NOT TO SCALE
MARA200.DWG

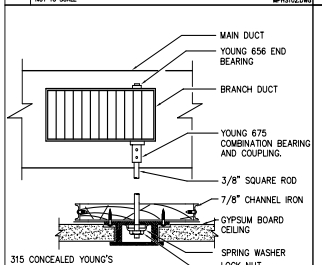

11 YOUNG'S REGULATOR OPERATOR
NOT TO SCALE

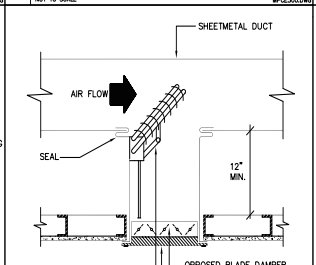

12 SIDEWALL SUPPLY REGISTER DETAIL
NOT TO SCALE
MAAD101.DWG

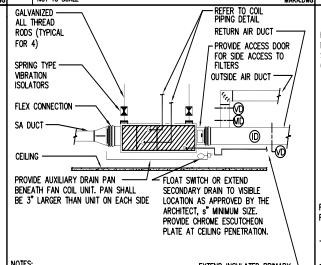

NOTES:
1. PROVIDE MISC. GALV. SUPPORT ANGLE OR CHANNEL AS REQ'D. TO BRIDGE STRUCTURE
2. ALL CONDENSATE DRAIN PIPING SHALL BE SCHEDULE 40 GALVANIZED STEEL WITH MALLEABLE IRON SCREWED FITTINGS.

EXTEND INSULATED PRIMARY CONDENSATE DRAIN LINE TO DRAIN, 6" MINIMUM SIZE; INSULATE W/ ARMAFLEX AP–2000 (25/50)

13 FAN COIL UNIT MOUNTING
NOT TO SCALE
MEFC100.DWG

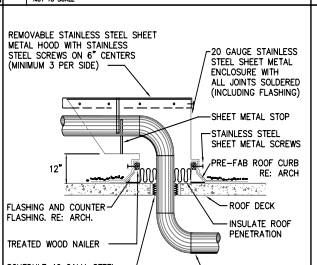

NOTE: REFER TO ARCHITECTURAL DRAWINGS FOR ROOF CONSTRUCTION AND FLASHING DETAILS.

14 PIPING ROOF PENETRATION
NOT TO SCALE
MPPE200.DWG

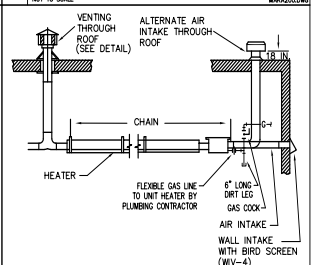

NOTES:
1. MINIMUM HEIGHT SHALL MEET MANUFACTURER REQUIREMENT.
2. REFER TO MANUFACTURER INSTRUCTION FOR INSTALLATION AND SUPPORT.

15 INFRARED UNIT HEATER MOUNTING
NOT TO SCALE
MEFA100.DWG

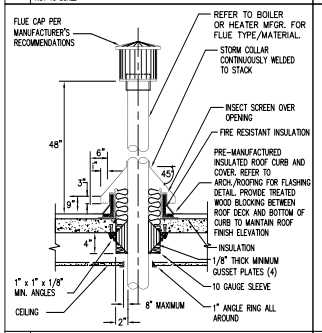

16 STEEL FLUE THRU ROOF DETAIL
NOT TO SCALE

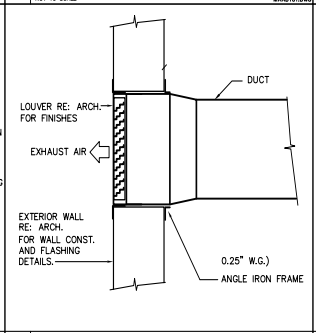

17 EXHAUST LOUVER MOUNTING
NOT TO SCALE

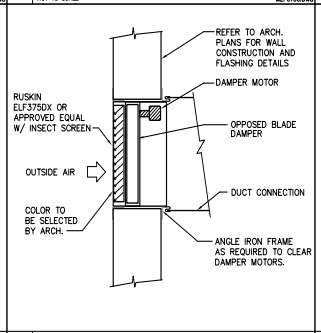

18 INTAKE LOUVER MOUNTING
NOT TO SCALE

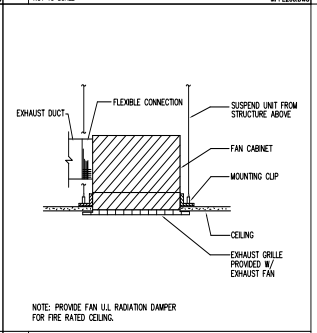

NOTE: PROVIDE FAN U.L. RADIATION DAMPER FOR FIRE RATED CEILING.

19 CEILING MOUNTED EXHAUST FAN
NOT TO SCALE

DBR
9601 McAllister Freeway, Suite 410
San Antonio, Texas 78216
210.546.0200 v 210.546.0201 f
TBPE Firm Registration NO. 2234

DBR Project Number 196023.000

JC	BV	CL	WJ	MC

PROFESSIONAL SEAL

NOT FOR CONSTRUCTION OR PERMITTING; PRINTED FOR REVIEW ONLY
01/14/2020
M. JACQUELINE CHANG, P.E.
TEXAS #124897

LOGO/CONTACT

martinez ARCHITECTS

Martinez Architect, LP
900 Rockmead, Suite 250
Houston, Texas 77339
281.346.7371

DESIGN TEAM

Architectural
Martinez Architects

Civil Engineer
Maverick Engineering

Structural
Matrix Structural Engineers

MEP
DBR

Landscaping
KDC Associates

FIRE STATION #5

CITY OF MIDLAND
2200 W GOLF COURSE RD
MIDLAND, TX 79701

PROJECT No: MA 18017
DATE: 01/14/2020

No.	Date	Description

MECHANICAL DETAILS

M601

4.1311

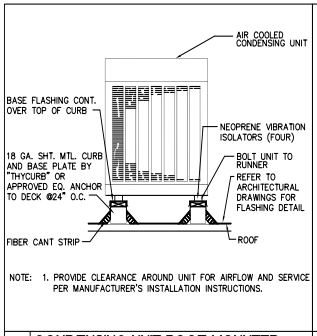

1 CONDENSING UNIT ROOF MOUNTED
NOT TO SCALE MECU101.DWG

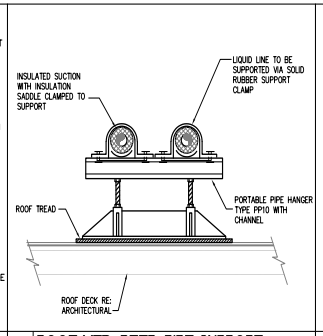

2 ROOF MTD. REFR. PIPE SUPPORT
NOT TO SCALE MPRE201.DWG

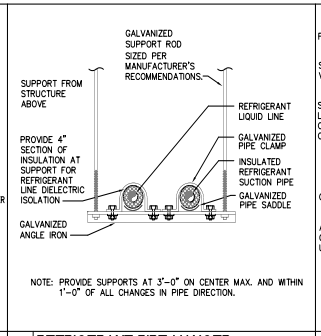

3 REFRIGERANT PIPE HANGER
NOT TO SCALE MPRE201.DWG

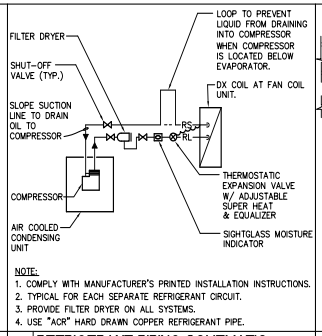

4 REFRIGERANT PIPING SCHEMATIC
NOT TO SCALE MPRE100.DWG

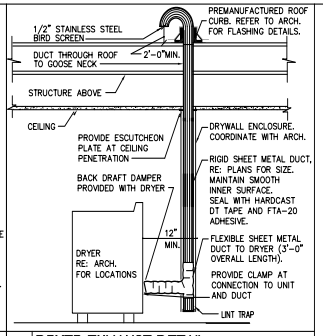

5 DRYER EXHAUST DETAIL
NOT TO SCALE MADT200.DWG

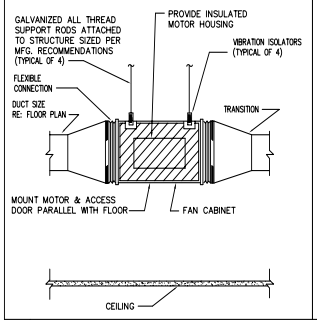

6 IN-LINE EXHAUST FAN DETAIL
NOT TO SCALE

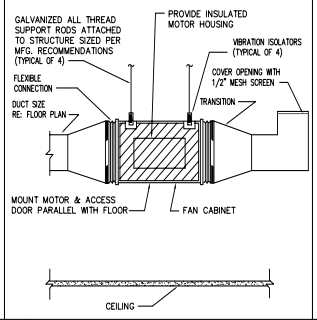

7 IN-LINE EXHAUST FAN DETAIL
NOT TO SCALE

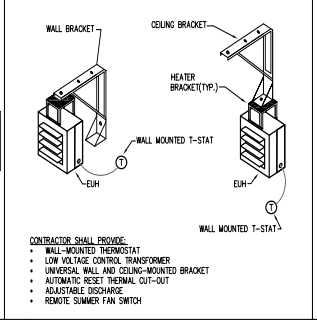

8 ELECTRIC UNIT HEATER DETAIL
NOT TO SCALE

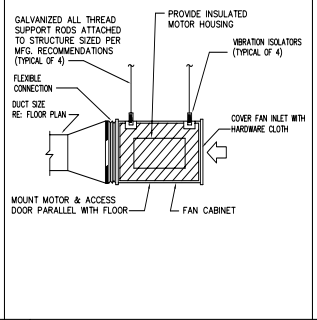

9 IN-LINE GARAGE EXHAUST FAN DETAIL
NOT TO SCALE

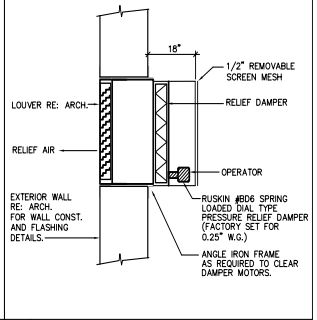

10 RELIEF LOUVER MOUNTING
NOT TO SCALE

DBR
9601 McAllister Freeway, Suite 410
San Antonio, Texas 78216
210.546.0200 v 210.546.0201 f
TBPE Firm Registration NO. 2234

DBR Project Number 196023.000

JC	BV	CL	WJ	MC

PROFESSIONAL SEAL

NOT FOR CONSTRUCTION OR PERMITTING; PRINTED FOR REVIEW ONLY
01/14/2020
M. JACQUELINE CHANG, P.E.
TEXAS #124697

LOGO/CONTACT

martinez ARCHITECTS

Martinez Architect, LP
900 Rockmead, Suite 250
Houston, Texas 77339
281.346.7371

DESIGN TEAM

Architectural
Martinez Architects

Civil Engineer
Maverick Engineering

Structural
Matrix Structural Engineers

MEP
DBR

Landscaping
KDC Associates

FIRE STATION #5

CITY OF MIDLAND
2200 W GOLF COURSE RD
MIDLAND, TX 79701

PROJECT No: MA 18017
DATE: 01/14/2020

No.	Date	Description

MECHANICAL DETAILS

M602

4.1312

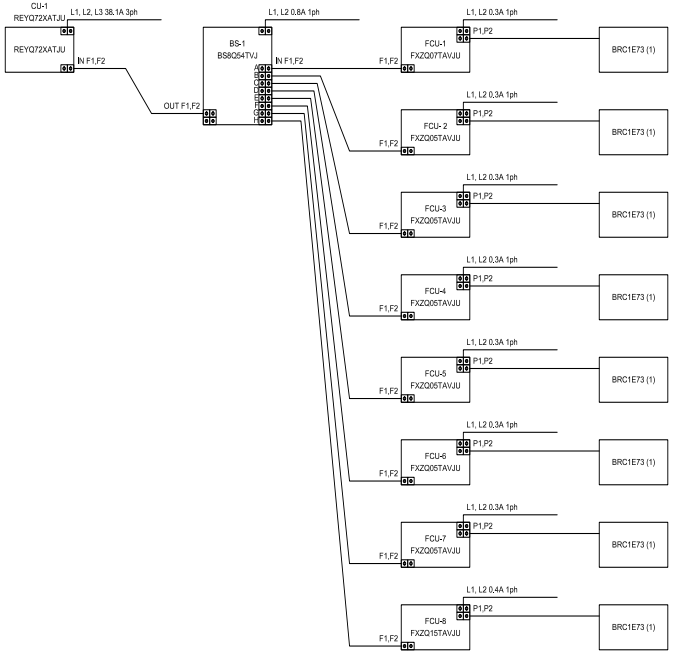

1 M603 **VRF WIRING SCHEMATIC**
NOT TO SCALE

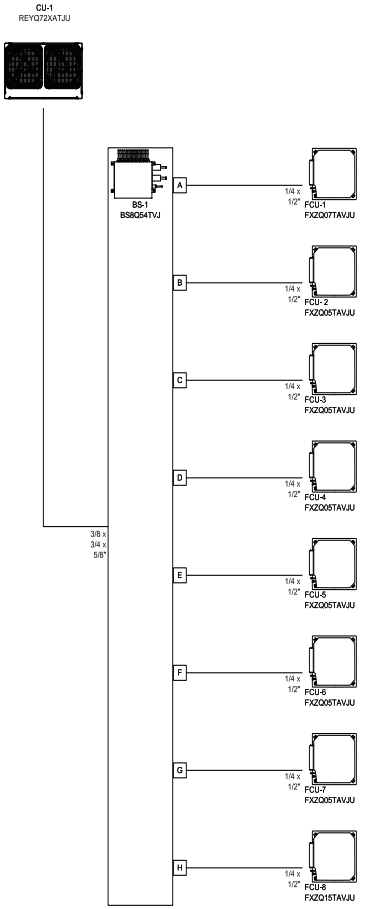

2 M603 **VRF PIPING SCHEMATIC**
NOT TO SCALE

DBR
9601 McAllister Freeway, Suite 410
San Antonio, Texas 78216
210.546.0200 v 210.546.0201 f
TBPE Firm Registration NO. 2234

DBR Project Number 196023.000

JC	BV	CL	WJ	MC

PROFESSIONAL SEAL

NOT FOR CONSTRUCTION OR PERMITTING; PRINTED FOR REVIEW ONLY
01/14/2020
M. JACQUELINE CHANG, P.E.
TEXAS #124997

LOGO/CONTACT

martinez ARCHITECTS

Martinez Architect, LP
900 Rockmead, Suite 250
Houston, Texas 77339
281.346.7371

DESIGN TEAM

Architectural
Martinez Architects

Civil Engineer
Maverick Engineering

Structural
Matrix Structural Engineers

MEP
DBR

Landscaping
KDC Associates

FIRE STATION #5

CITY OF MIDLAND
2200 W GOLF COURSE RD
MIDLAND, TX 79701

PROJECT No: MA 18017
DATE: 01/14/2020

No.	Date	Description

MECHANICAL
VRF DIAGRAMS

M603

4.1313

ABBREVIATIONS

A
A AMPERES
ABV ABOVE
A/C AIR CONDITIONING
AC ALTERNATING CURRENT, AIR COMPRESSOR, ABOVE COUNTER
ACC AIR COOLED CHILLER
ACCU AIR COOLED CONDENSING UNIT
AD ACCESS DOOR
ADA AMERICANS WITH DISABILITIES ACT
AF AMPERE FUSE, AMPERE FRAME
AFC ABOVE FINISHED CEILING
AFF ABOVE FINISHED FLOOR
AFG ABOVE FINISHED GRADE
AHU AIR HANDLING UNIT
AIC AMPERE INTERRUPT CAPACITY
AL ALUMINUM
AM AMMETER
AMP AMPLIFIER
ANN ANNUNCIATOR
AP ACCESS PANEL, ALARM PANEL
ARCH ARCHITECT, ARCHITECTURAL
ASC AMPERES SHORT CIRCUIT
AT AMPERE TRIP RATING
ATS AUTOMATIC TRANSFER SWITCH
AVG. AVERAGE
AUX. AUXILIARY
AWG. AMERICAN WIRE GAUGE

B
BAS BUILDING AUTOMATION SYSTEM
BC BELOW COUNTER
BKR BREAKER
BLDG. BUILDING

C
C CONDUIT, CELSIUS
CATV CABLE TELEVISION SYSTEM
CCTV CLOSED CIRCUIT TELEVISION
CWP CONDENSER WATER PUMP
CH CHILLER
CHP CHILLED WATER PUMP
CIRC CIRCULATING
CKT CIRCUIT
CL CENTERLINE
CLG. CEILING
CMU CONCRETE MASONRY UNIT
COL. COLUMN
CONC CONCRETE
CONN CONNECTION
CONT. CONTINUOUS,CONTINUATION
CONTR. CONTROLLER, CONTRACTOR
CP. CIRCULATING PUMP
CPUC CPU CHILLER
CR CARD READER, CORD REEL
CRU CONDENSATE RETURN UNIT
CT CURRENT TRANSFORMER, COOLING TOWER
CTR CENTER
CU COPPER

D
dB DECIBEL
DC DIRECT CURRENT
DDC DIRECT DIGITAL CONTROL
DTL DETAIL
DIA DIAMETER
DIM DIMENSION
DISC DISCONNECT
DN DOWN
DP DISTRIBUTION PANEL
DPDT DOUBLE-POLE, DOUBLE-THROW
DPST DOUBLE-POLE, SINGLE-THROW
DR DROPPED RECEPTACLE
DS DAYLIGHT SENSOR
DW DISHWASHER
DWG DRAWING
DWH DOMESTIC WATER HEATER
DWP DOMESTIC WATER PUMP
DZ DAYLIGHT ZONE

E
(E) EXISTING
EA EACH
EC ELECTRICAL CONTRACTOR
E.C. EMPTY CONDUIT
EDF ELECTRIC DRINKING FOUNTAIN
EF EXHAUST FAN
EFF EFFICIENCY
EHC ELECTRIC HEATING COIL
EJ EXPANSION JOINT
EL ELEVATION
ELEC. ELECTRICAL
ELEV. ELEVATOR
EMCS ENERGY MANAGEMENT AND CONTROLS SYSTEM
EMERG EMERGENCY
EMS ENERGY MANAGEMENT SYSTEM
ENCL ENCLOSURE
ENGR. ENGINEER
EPO EMERGENCY POWER OFF
EQUIP EQUIPMENT
(ER) EXISTING TO REMAIN
EUH ELECTRIC UNIT HEATER
EWH ELECTRIC WATER HEATER
EXH EXHAUST

F
F FAHRENHEIT, FAN, FIRE
FA FIRE ALARM
FACP FIRE ALARM CONTROL PANEL
FCU FAN COIL UNIT
FF FURNITURE FEED
FIXT FIXTURE
FLA FULL LOAD AMPS
FLEX FLEXIBLE
FLR FLOOR
FLUOR FLUORESCENT
FP FIRE PUMP, FAN POWERED
FPTB FAN POWERED TERMINAL BOX
FRZR FREEZER
FS FUSED SWITCH, FLOW SWITCH
FSD MOTORIZED FIRE SMOKE DAMPER
FT FOOT, FEET
FTL FEED-THRU LUGS
FUT FUTURE
FVNR FULL-VOLTAGE, NON-REVERSING

G
GA GAUGE
GAL GALLON
GALV GALVANIZED
GC GENERAL CONTRACTOR
GEN GENERATOR
GFCI GROUND FAULT CIRCUIT INTERRUPTER
GND GROUND
GTD GENERATOR TRANSFER DEVICE
GUH GAS UNIT HEATER

H
HACR HEATING, AIR CONDITIONING RATED CIRCUIT BREAKER
HD ELECTRIC HAND DRYER
HID HIGH INTENSITY DISCHARGE
HOA HAND-OFF-AUTOMATIC
HORIZ HORIZONTAL
HP HORSEPOWER
HPS HIGH PRESSURE SODIUM
HS HAND SET
HSC HAND SCANNER
HTG HEATING
HTR HEATER
HVAC HEATING, VENTILATING, AND AIR CONDITIONING
HVU HEATING/ VENTILATING UNIT
HWB HOT WATER BOILER
HWC HOT WATER CIRCULATOR
HWP HEATING WATER PUMP
HZ HERTZ

I
ID INSIDE DIAMETER
IG ISOLATED GROUND
IN INCH
INCAND INCANDESCENT
INT INTERNAL, INTERIOR

J
JB JUNCTION BOX
JP JOCKEY PUMP

K
KEC KITCHEN EQUIPMENT CONTRACTOR
KO KNOCKOUT
kVA KILOVOLT- AMPS
kW KILOWATT
kWH KILOWATT-HOUR

L
LED LIGHT EMITTING DIODE
LF LINEAR FEET
LRA LOCKED ROTOR AMPS
LTG LIGHTING
LV LOW VOLTAGE TRANSFORMER
LVL LEVEL

M
M METER
MAP MASTER ALARM PANEL
MATV MASTER ANTENNA TELEVISION SYSTEM
MAX. MAXIMUM
MC METAL CLAD CABLE
MCA MINIMUM CIRCUIT AMPS
MCB MAIN CIRCUIT BREAKER
MCC MOTOR CONTROL CENTER
MD MOTORIZED DAMPER
MDP MAIN DISTRIBUTION PANEL
MECH. MECHANICAL
MFR MANUFACTURER
MH METAL HALIDE
MIC MICROPHONE
MIN. MINIMUM
MLO MAIN LUGS ONLY
MOCP MAXIMUM OVER-CURRENT PROTECTION
MSB MAIN SWITCHBOARD
MTD MOUNTED
MV MERCURY VAPOR

N
N3R NEMA 3R ENCLOSURE
N4X NEMA 4X ENCLOSURE
N.C. NORMALLY CLOSED
NEC NATIONAL ELECTRICAL CODE
NEMA NATIONAL ELECTRICAL MANUFACTURER'S ASSOCIATION
NF NON-FUSED
NFPA NATIONAL FIRE PROTECTION ASSOCIATION
NFS NON-FUSED SWITCH
NIC NOT IN CONTRACT
NL NIGHT LIGHT
N.O. NORMALLY OPEN
NO. NUMBER
NTS NOT TO SCALE

O
OAF OUTSIDE AIR FAN
OAHU OUTSIDE AIR HANDLING UNIT
OC ON CENTER
OD OUTSIDE DIAMETER
OHE OVERHEAD ELECTRICAL
OPG OPENING

P
P POLE, PUMP
PB PUSHBUTTON
PC PHOTOCELL
PH PHASE
PL PILOT LIGHT
PLBG PLUMBING
PNEU PNEUMATIC
PNL PANEL
POS POINT OF SALE
PP POWER POLE
PR PAIR
PRI PRIMARY
PS PHOTOSENSOR
PVC POLYVINYL CHLORIDE
PWR POWER

Q
QTY QUANTITY

R
R EXISTING TO BE REMOVED
RA RETURN AIR
RAD REFRIGERATED AIR DRYER
RAF RETURN AIR FAN
RC RECONNECT EXISTING DEVICE TO CIRCUIT INDICATED
RCP REFLECTED CEILING PLAN
RCPT RECEPTACLE
RE REFERENCE, REFER
REC RECEPTACLE
REF REFRIGERATOR
REINF REINFORCING
REL EXISTING TO BE RELOCATED
REL/EX NEW LOCATION OF RELOCATED EQUIPMENT
REQD REQUIRED
REV REVISION, REVISE
RGS RIGID GALVANIZED STEEL
RLA RUNNING LOAD AMPS
RPM REVOLUTIONS PER MINUTE
RR REMOVE AND REPLACE
RTU ROOFTOP UNIT

S
SA SUPPLY AIR
SAF SUPPLY AIR FAN
SCHED SCHEDULE
SE SEWAGE EJECTOR
SEC SECONDARY
SECT SECTION
SF SQUARE FEET
SHT SHEET
SIM SIMILAR
SKVA STARTING KILOVOLT-AMPS
SKW STARTING KILOWATTS
SP SUMP PUMP
SPEC SPECIFICATION
SPF STAIR PRESSURIZATION FAN
SPKR SPEAKER
SPD SURGE PROTECTION DEVICE
SPDT SINGLE-POLE, DOUBLE-THROW
SPST SINGLE-POLE, SINGLE-THROW
SQ. SQUARE
SRF SMOKE REMOVAL FAN
SS START-STOP PUSH BUTTON
SSSC SOLID STATE SPEED CONTROL
ST SHUNT TRIP
STB STEAM BOILER
STD STANDARD
STL STEEL
SURF SURFACE
SW SWITCH
SWBD SWITCHBOARD

T
TC TEMPERATURE CONTROL
TEL TELEPHONE
TF TRANSFER FAN
TL TWIST-LOCK
TOC TOP OF CURB
TOS TOP OF STEEL
TP CHILD TAMPER PROOF DEVICE
TSTAT THERMOSTAT
TTB TELEPHONE TERMINAL BOARD
TTC TELEPHONE TERMINAL CABINET
TU TERMINAL UNIT
TV TELEVISION
TVSS TRANSIENT VOLTAGE SURGE SUPPRESSOR
TYP TYPICAL

U
UG UNDERGROUND
UH UNIT HEATER
UL UNDERWRITERS LABORATORIES, INC.
UNO UNLESS NOTED OTHERWISE
UPS UNINTERRUPTABLE POWER SYSTEM

V
V VOLT
VA VOLT-AMPERE
VAV VARIABLE AIR VOLUME
VC VOLUME CONTROL
VERT VERTICAL
VFD VARIABLE FREQUENCY DRIVE
VP VACUUM PUMP
VM VOLT METER

W
W WATT, WIRE, WIDTH
WG WIREGUARD
W/ WITH
W/O WITHOUT
WP WEATHERPROOF
WS WATER SOFTENER
WT WATERTIGHT, WEIGHT
WWF WELDED WIRE FABRIC
W/FT2 WATTS PER SQUARE FOOT

X
XFMR TRANSFORMER

Z
Z ZONE

DAYLIGHT ZONE/PRIMARY DAYLIGHT ZONE

SECONDARY DAYLIGHT ZONE

ELECTRICAL SYMBOLS

GENERAL NOTES:
A. NOT ALL SYMBOLS SHOWN ON THIS SYMBOL LIST ARE USED IN THE CONTRACT DOCUMENTS.

MOTORS AND CONTROLS
SINGLE OR THREE PHASE MOTOR NUMBER INDICATES HORSE POWER
ELECTRIC DUCT HEATER
DISCONNECT (SAFETY) SWITCH "200/3/150" DENOTES AMPERES/POLE/FUSE, "NF" DENOTES NON-FUSED "N3R" DENOTES NEMA 3R
ENCLOSED CIRCUIT BREAKER- "200/3/150" DENOTES AMPERES/POLE/TRIP.
MOTOR STARTER FURNISHED BY DIVISION 23 AND INSTALLED BY DIVISION 26.
COMBINATION DISCONNECT (SAFETY) SWITCH AND MOTOR STARTER. "30/3/15/#0" DENOTES AMPERES/POLES/FUSE/ STARTER SIZE, "NF" DENOTES NON-FUSED. FURNISHED BY DIVISION 23 AND INSTALLED BY DIVISION 26.
VFD VARIABLE FREQUENCY DRIVE PROVIDED BY DIVISION 23 AND INSTALLED BY DIVISION 26.
EPO EMERGENCY POWER OFF BUTTON.

RECEPTACLES AND OUTLETS
ALL RECEPTACLES SHALL BE MOUNTED 18" ABOVE FINISHED FLOOR TO CENTER OF DEVICE UNLESS NOTED OTHERWISE.

SIMPLEX WALL RECEPTACLE, NEMA 5-20R, 20A, 125V.
DUPLEX WALL RECEPTACLE, NEMA 5-20R, 20A, 125V.
"GFCI" DENOTES GROUND FAULT INTERRUPTER,
"WP" DENOTES WEATHERPROOF,
"IG" DENOTES ISOLATED GROUND,
"TP" DENOTES SAFETY TYPE, (TAMPER PROOF)
"DR" DENOTES DROPPED RECEPTACLE,
"USB" DENOTES RECEPTACLE WITH UNIVERSAL SERIAL BUS,
"AC" DENOTES ABOVE COUNTER MOUNTING, SEE
"UC" DENOTES UNDER COUNTER MOUNTING, SEE
"H" DENOTES HORIZONTALLY ORIENTED RECEPTACLE, SEE ARCHITECTURAL PLANS FOR EXACT MOUNTING HEIGHT.
DUPLEX WALL RECEPTACLE ON EMERGENCY CIRCUIT, RED COLOR.
DUPLEX WALL RECEPTACLE ON A CIRCUIT DEDICATED TO DATA PROCESSING, GRAY COLOR. PROVIDE ISOLATED GROUND TYPE RECEPTACLES WHERE NOTED.
SPLIT WIRED RECEPTACLE. TOP RECEPTACLE SHALL BE SWITCHED ACCORDING TO PLANS, AND BOTTOM SHALL REMAIN UNSWITCHED.
CONTROLLED DUPLEX WALL RECEPTACLE, NEMA 5-20R, 20A, 125V. "SP" DENOTES SPLIT WIRED
FOURPLEX (DOUBLE DUPLEX) WALL RECEPTACLE. NEMA 5-20R, 20A, 125V.
FOURPLEX WALL RECEPTACLE ON EMERGENCY CIRCUIT, RED COLOR.
CONTROLLED FOURPLEX (DOUBLE DUPLEX) WALL RECEPTACLE. NEMA 5-20R, 20A, 125V.
SPECIAL RECEPTACLE, NEMA CONFIGURATION AS NOTED.
FLUSH ELECTRICAL FLOOR OUTLET, "P" DENOTES POKE-THRU. "D" INDICATES DUPLEX RECEPTACLE, "R" INDICATES RED RECEPTACLE ON EMERGENCY POWER. REFER TO FLOOR BOX SCHEDULE, FIRE RATED POKE-THROUGH SCHEDULE AND KEYED NOTES.
MULTI-OUTLET SURFACE RACEWAY. SEE ARCHITECTURAL DRAWINGS FOR EXACT MOUNTING HEIGHTS.
JUNCTION BOX
"MD" DENOTES MOTOR DAMPER,
"CR" DENOTES CORD REEL,
"D" DENOTES DROP CORD RECEPTACLE,
DUPLEX RECEPTACLE WITH HOMERUN
DUPLEX RECEPTACLE (PEDESTAL MOUNTED)
TWO-GANG CEILING OUTLET
TWO-GANG FLOOR OUTLET
THREE-GANG FLOOR OUTLET
POWER POLE
DIRECT CONNECTION TO EQUIPMENT
PULL BOX (OVER 4" SQUARE)
CLOCK RECEPTACLE TO BE MOUNTED 12" BELOW FINISHED CEILING. (2) DENOTES DOUBLE SIDED CLOCK.

LIGHTING
LETTER(S) DENOTE TYPE- SEE LIGHTING FIXTURE SCHEDULE FOR ADDITIONAL INFORMATION.

2' X 4' LIGHTING FIXTURE.
2' X 2' LIGHTING FIXTURE.
1' X 4' LIGHTING FIXTURE.
1' X 2' LIGHTING FIXTURE.
1' X 1' LIGHTING FIXTURE.
STRIP LIGHTING FIXTURES.
STAGGERED STRIP LIGHTING FIXTURE.
ROUND DOWNLIGHT FIXTURE.
SQUARE DOWNLIGHT FIXTURE.
WALL MOUNTED LIGHTING FIXTURE.
TRACK LIGHTING FIXTURE. MOUNTED AS SHOWN ON LIGHTING FIXTURE SCHEDULE.
CEILING MOUNTED EXIT SIGN; ARROWS AS INDICATED. SHADED AREA DENOTES FACE.
WALL MOUNTED EXIT SIGN; ARROWS AS INDICATED. SHADED AREA DENOTES FACE.
EMERGENCY WALL MOUNTED LIGHTING FIXTURE. BATTERY OPERATED UNLESS NOTED OTHERWISE.
SECURITY WALL PACK
SITE LIGHTING FIXTURE.
POST-TOP FIXTURE/ACORN FIXTURE
BRACKET ARM INDICATES WALL MOUNT WITH ARM
EMERGENCY LIGHT FIXTURE WITH BATTERY PACK. PROVIDE WITH UNSWITCHED HOT FOR LOSS OF VOLTAGE AND CHARGING (SAME CIRCUIT AS NORMAL POWER LIGHTING). FIXTURES SHALL BE WIRED IN A MANNER AS TO ALLOW SWITCHING OF FIXTURES WITHOUT DISCHARGING THE EMERGENCY BATTERY. BATTERY PACK IS TO ONLY OPERATE IN THE EVENT OF A POWER OUTAGE.
EM CIRCUIT — LIGHT FIXTURE ON EMERGENCY BRANCH CIRCUIT, CIRCUIT NUMBER ADJACENT TO FIXTURE INDICATES EMERGENCY CIRCUIT CONNECTED TO FIXTURE. PROVIDE UNSWITCHED HOT, NEUTRAL AND GROUND FOR ALL EMERGENCY LIGHTING ORIGINATING FROM THE EMERGENCY CIRCUIT SHOWN.
NL — EMERGENCY "NIGHT LIGHT" LIGHT FIXTURE. LIGHT FIXTURE IS UNSWITCHED AND INTENDED FOR 24 HOUR OPERATION. FEED VIA UNSWITCHED HOT.

RACEWAYS AND WIRING
CAP AND STAKE
CONDUIT CONCEALED IN WALL OR CEILING
CONDUIT UNDERSLAB OR UNDERGROUND
EM — EMERGENCY CONDUIT
EXPOSED CONDUIT
DB — UNDERGROUND CONDUIT, "DB" DENOTES DUCTBANK ENCASED IN CONCRETE
OHE — OVERHEAD ELECTRIC PRIMARY UTILITY POWER LINE
CONDUIT TURNED UP
CONDUIT TURNED DOWN
HASH MARKS INDICATE NUMBER OF CONDUCTORS. LEFT TO RIGHT PHASE/NEUTRAL/SWITCH LEG/GROUND/ISOLATED GROUND. NO HASH MARKS INDICATES 2# 12, PLUS GROUND, UNLESS NOTED OTHERWISE.
1LA-2,4 — HOMERUN TO PANEL WITH CIRCUIT NUMBER(S) AS INDICATED.
PARTIAL CIRCUIT HOMERUN TO PANEL. (ON)1LA-6
T — COMMUNICATIONS CONDUIT OR CABLE:
"CL" DENOTES MASTER CLOCK,
"CR" DENOTES CASH REGISTER
"D" DENOTES DATA,
"FA" DENOTES FIRE ALARM,
"I" DENOTES INTERCOM,
"OHE" DENOTES OVERHEAD ELECTRICAL LINE.
"PA" DENOTES PAGING,
"S" DENOTES SECURITY,
"T" DENOTES TELEPHONE,
"V" DENOTES VIDEO,
TELECOMMUNICATIONS CABLE TRAY TO BE CONCEALED ABOVE ACCESSABLE CEILING.

ELECTRICAL EQUIPMENT
DISTRIBUTION PANEL
MSB — SWITCHBOARD, MAIN DISTRIBUTION PANEL OR MOTOR CONTROL CENTER
PANELBOARD (FLUSH/SURFACE MOUNT)
FLOOR MOUNTED DRY-TYPE TRANSFORMER
SUSPENDED OR WALL MOUNTED TRANSFORMER
ATS — AUTOMATIC TRANSFER SWITCH
FIRE RATED PLYWOOD TERMINAL BOARD, TYPE AS NOTED, 4' X 8' X 3/4" UNLESS NOTED OTHERWISE
TERMINAL CABINET (FLUSH/SURFACE MOUNT), TYPE AS NOTED, 24" X 48" X 3-1/2" UNLESS NOTED OTHERWISE.
BAT — BATTERY/INVERTER UNIT
LV — LOW VOLTAGE TRANSFORMER.

COMMUNICATIONS
ALL OUTLET BOXES SHALL BE MOUNTED 18" ABOVE FINISHED FLOOR TO CENTER OF DEVICE UNLESS NOTED OTHERWISE.

THE FOLLOWING NOTATIONS REFER TO ALL COMMUNICATIONS OUTLETS:
"FAX" DENOTES OUTLET DEDICATED FOR A FAX,
"W" DENOTES WALL PHONE SHALL BE MOUNTED AT 42" A.F.F.
"PAY" DENOTES PAY PHONE SHALL BE MOUNTED AT 42" A.F.F.

HS — SCHOOL INTERCOMMUNICATION SYSTEM HANDSET.
INDICATES THE LOCATION OF A NEW TECHNOLOGY WALL OUTLET, PROVIDE DUAL GANG BACK BOX. REFERENCE TECHNOLOGY SHEET FOR CONTENT.
MICROPHONE FLOOR OUTLET, "W" INDICATES WALL MOUNTED "F" INDICATES FLOOR MOUNTED "H" INDICATES HANGING MOUNTED
CEILING MOUNTED SPEAKER. "VC" INDICATES VOLUME CONTROL ON SPEAKER.
WALL MOUNTED SPEAKER. "L" INDICATED LOCAL SOUND REINFORCEMENT
CB — SCHOOL INTERCOMMUNICATION SYSTEM CALL-IN. PUSH BUTTON
BELL, BUZZER OR CHIME AT 80+ A.F.F.
VC — VOLUME CONTROL - WALL MOUNTED
AUXILIARY INPUT JACK. "W" INDICATES WALL MOUNTED "F" INDICATES FLOOR MOUNTED "H" INDICATES HANGING MOUNTED
AVO — "HIGH" PORTION OF "HIGH/LOW" OUTLETS, REFER TO OUTLET DETAIL.
AVI — "LOW" PORTION OF "HIGH/LOW" OUTLETS, REFER TO OUTLET DETAIL.
CLOCK RECEPTACLE TO BE MOUNTED 12" BELOW FINISHED CEILING. (2) DENOTES DOUBLE SIDED CLOCK.
REFERENCE TECHNOLOGY/SECURITY SHEET FOR ADDITIONAL INFORMATION.

ONE LINE AND RISER DIAGRAMS
TRANSFORMER, TYPE AND RATINGS AS NOTED
800A/3P — SWITCH, RATING AS SHOWN
400A — FUSE, RATING AS SHOWN
CIRCUIT BREAKER, RATING AS SHOWN, 3 POLE UNLESS NOTED OTHERWISE. "CL" DENOTES CURRENT LIMITING
DRAWOUT CIRCUIT BREAKER, RATINGS AS SHOWN, 3 POLE UNLESS NOTED OTHERWISE
ST — SHUNT TRIP
GF — GROUND FAULT RELAY
K — KIRK-KEY INTERLOCK
M — DIGITAL METER
A 0-2000 — AMMETER, RANGE AS SHOWN
AS — AMMETER SWITCH
V 0-600 — VOLTMETER, RANGE AS SHOWN
VS — VOLTMETER SWITCH
WH D-15 — WATT-HOUR METER, "D" DENOTES DEMAND REGISTER "15" DENOTES MINUTES OF DEMAND INTERVAL
1200/5 — CURRENT TRANSFORMER, RATED AS SHOWN
12.47KV/120V — POTENTIAL TRANSFORMER, RATING AS SHOWN
GROUND CONNECTION
LIGHTING ARRESTOR
G — GENERATOR SET
AUTOMATIC TRANSFER SWITCH
BUS DUCT PLUG
TVSS — TRANSIENT VOLTAGE SURGE SUPPRESSOR
M — ELECTRICAL METER
SPD — SURGE PROTECTION DEVICE

MISCELLANEOUS
SHADED SYMBOLS INDICATE EXISTING DEVICES TO REMAIN, UNLESS OTHERWISE NOTED.
INDICATES WALL-MOUNTED WHEN ATTACHED TO ANY SYMBOL
1 — DRAWING NOTE REFERENCE
1 — STARTER/DISCONNECT SCHEDULE REFERENCE
1 — FEEDER SCHEDULE REFERENCE
LC — LIGHTING CONTACTOR
TS — TIME SWITCH
PC — PHOTOCELL
PUSH BUTTON/DOOR BELL
TC — TIMECLOCK
R — RELAY
SOS — AREA OF RESCUE ASSISTANCE
B — BELL

FIRE ALARM
W — WATER FLOW SWITCH
SP — SUPERVISORY SWITCH
S — SMOKE DETECTOR - MULTI CRITERIA DETECTOR
S — SMOKE DETECTOR - "ID" INDICATES IN DUCT TYPE "520Hz" INDICATES LOW FREQUENCY SOUNDER BASE "AC" INDICATES ABOVE CEILING "CO" INDICATES COMBINATION CARBON MONOXIDE
H — HEAT DETECTOR
S BT — BEAM DETECTOR TRANSMITTER, HIGH IN CEILING WALL DIRECT LINE OF SIGHT.
S BR — BEAM DETECTOR RECEIVER, HIGH IN CEILING WALL DIRECT LINE OF SIGHT.
S — FIRE ALARM SPEAKER / CEILING MOUNT.
S — FIRE ALARM SPEAKER STROBE / CEILING MOUNTED
S — FIRE ALARM SPEAKER STROBE / WALL MOUNTED
S — FIRE ALARM SPEAKER / WALL MOUNTED
DH — MAGNETIC DOOR HOLDER
R — AUXILIARY CONTROL RELAY
F — FIRE ALARM PULL STATION +42" AFF
F — FIREMAN'S TELEPHONE JACK +42" AFF
AUDIO VISUAL FIRE ALARM HORN STROBE +80" AFF- 15/75cd U.N.O.
VISUAL FIRE ALARM (STROBE) CEILING MOUNT - 15/75cd U.N.O.
VISUAL FIRE ALARM (STROBE) WALL MOUNT +80" AFF- 15/75cd U.N.O.
AUDIO FIRE ALARM HORN +80" AFF
FACP — FIRE ALARM CONTROL PANEL
ANN — REMOTE FIRE ALARM ANNUNCIATOR PANEL
FH — FIRE FIGHTER HANDSET
RPS — REMOTE POWER SUPPLY FOR AUDIO/VISUAL FIRE ALARM DEVICES.
FSD — FIRE SMOKE DAMPER
REMOTE LED INDICATOR LIGHT

SECURITY
KP — KEYPAD
GB — GLASS BREAK SENSOR
H — HOLD UP BUTTON
DS — INTERCOM DOOR STATION
MS — INTERCOM MASTER STATION
LONG RANGE MOTION DETECTOR
WALL MOUNTED MOTION DETECTOR
CEILING MOUNTED MOTION DETECTOR
IDP — INTRUSION DETECTION PANEL
DC — DOOR CONTACT
PB — ADA AUTO DOOR OPEN BUTTON
DR — DOOR RELEASE BUTTON
CR — CARD READER
CR — WALL MOUNTED CARD READER

SWITCHES/CONTROLS
ALL WALL SWITCHES SHALL BE MOUNTED AT 42" ABOVE FINISHED FLOOR TO CENTER OF DEVICE UNLESS NOTED OTHERWISE.

$ — SWITCH, SPST, 20A, 120/277V.
$3 — SWITCH, 20A, 120/277V:
"3" DENOTES THREE-WAY
"4" DENOTES FOUR-WAY
"K" KEY SWITCH
"P" PILOT LIGHT
"T" SPRING WOUND TIMER
"R" DENOTES RED
"F" DENOTES FAN SPEED CONTROLLER
"OC" DENOTES OCCUPANCY SENSOR SWITCH
"LV" DENOTES LOW VOLTAGE SWITCH, USED WITH ROOM CONTROLLERS
$D — DIMMER CONTROL SWITCH, LINE VOLTAGE, 1000 WATT UNLESS OTHERWISE NOTED.
$3K — THREE-WAY KEY SWITCH, 20A, 120/277V.
$M — MOTOR RATED SWITCH WITH THERMAL OVERLOADS
OC1 — CEILING MOUNTED OCCUPANCY SENSOR
OC2 — CEILING MOUNTED OCCUPANCY SENSOR (HIGH BAY)
DS — DAYLIGHT/PHOTO SENSOR
RC — ROOM CONTROLLER

REFER TO LIGHTING CONTROL DEVICE SCHEDULE ON SHEET E5.01 FOR MORE INFORMATION

DRAWING/DETAIL REFERENCE KEY
REFER TO DRAWING/DETAIL NUMBER
RE: 1 /E3-2
1 E3-2
SHEET NUMBER

DBR
9601 McAllister Freeway, Suite 410
San Antonio, Texas 78216
210.546.0200 p
210.546.0201 f
TBPE Firm Registration No. 2234

DBR Project Number	196023.000

JC	BV	CL	WJ	MC

PROFESSIONAL SEAL

NOT FOR CONSTRUCTION OR PERMITTING; PRINTED FOR REVIEW ONLY
01/14/2020
M. JACQUELINE CHANG, P.E.
TEXAS #134987

LOGO/CONTACT

martinez ARCHITECTS
Martinez Architect, LP
900 Rockmead, Suite 250
Houston, Texas 77339
281.346.7371

DESIGN TEAM

Architectural
Martinez Architects

Civil Engineer
Maverick Engineering

Structural
Matrix Structural Engineers

M/E/P/T
DBR

Landscape Architect
KDC Associates

Consultant 5 Name

FIRE STATION #5
CITY OF MIDLAND
2210 W GOLF COURSE RD
MIDLAND, TX 79701

PROJECT No: MA 18017
DATE: 01/14/2020

No.	Date	Description

ELECTRICAL SYMBOL LEGEND

E001

4.1314

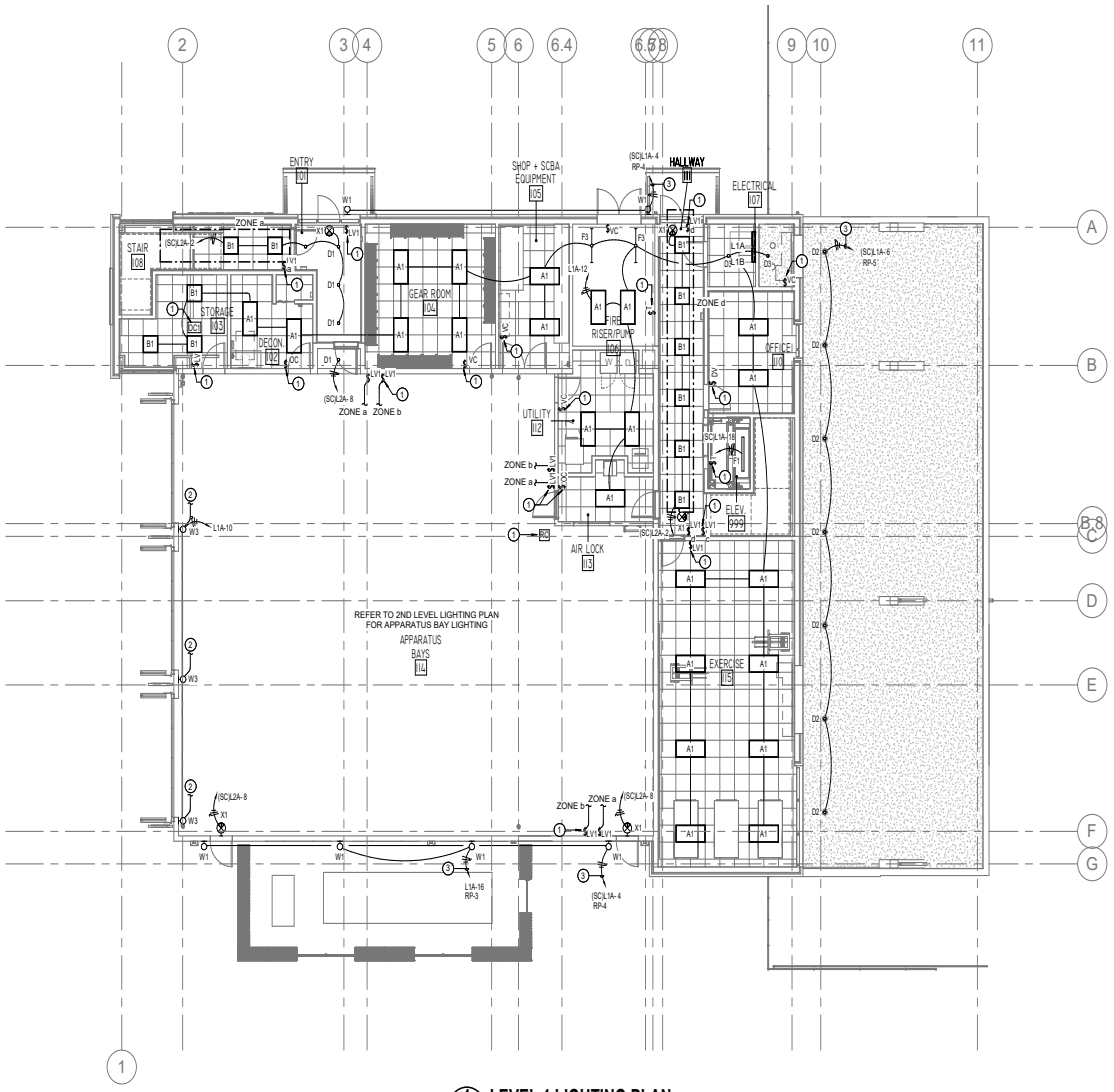

1 E101 **LEVEL 1 LIGHTING PLAN**

1/8" = 1'-0"

LIGHTING GENERAL NOTES

A. ALL CEILING MOUNTED DEVICES LOCATED IN LAY-IN CEILINGS SHALL BE CENTERED IN THE CEILING TILE.

B. MULTIPLE SWITCHES SHOWN TOGETHER SHALL BE GANGED TOGETHER UNDER A COMMON COVER PLATE.

C. CONTRACTOR SHALL INDICATE LIGHTING CIRCUIT SERVING EACH SWITCH BY PROVIDING TYPE WRITTEN LABELING LOCATED ON INSIDE FACE OF EACH SWITCH COVER PLATE.

D. SPRINKLER CONTRACTOR SHALL COORDINATE SPRINKLER HEAD LOCATIONS WITH CEILING MOUNTED LIGHTING FIXTURES.

E. LOWER CASE CHARACTER ADJACENT TO SWITCH AND/OR LIGHTING FIXTURE INDICATES SWITCHING GROUP.

F. ELECTRICAL CONTRACTOR SHALL COORDINATE INSTALLATION OF ALL RECESSED LIGHTING FIXTURES WITH THE CEILING INSTALLER, TO PROVIDE FIRE PROTECTION AS DESCRIBED IN THE UL FIRE RESISTANCE DIRECTORY STANDARD APPROPRIATED TO THE CEILING ASSEMBLY INSTALLED AND FIRE RATING REQUIRE. REFER TO THE ARCHITECTURAL DRAWINGS FOR UL DESIGN NUMBER. REFER TO DETAIL 11 SHEET E302.

G. REFER TO LIGHTING CONTROL DEVICE SCHEDULE ON SHEET E501 FOR CONTROLLABILITY AND MANUFACTURER/PRODUCT # INFORMATION ON ALL LIGHTING CONTROL DEVICES.

LIGHTING KEYED NOTES

1. REFER TO SHEET E501 FOR LIGHTING CONTROL DEVICE INFORMATION.
2. W3 LIGHTING FIXTURE SHALL FLASH WHILE ASSOCIATED APPARATUS BAY DOOR IS IN OPERATION. PROVIDE CONTROL RELAY AND TIE INTO ASSOCIATED APPARATUS BAY DOOR CONTROLLER.
3. EXTEND CIRCUIT THROUGH LIGHTING RELAY PANEL CONTROLLED BY PHOTOCELL AND TIMECLOCK. LIGHTING RELAY PANEL SHALL BE LOCATED NEXT TO ELECTRICAL PANEL SERVING LOAD.

TRUE NORTH

PROJECT NORTH N

DBR
9601 McAllister Freeway, Suite 410
San Antonio, Texas 78216
210.546.0200 p
210.546.0201 f
TBPE Firm Registration No. 2234

DBR Project Number 196023.000

JC	BV	CL	WJ	MC

PROFESSIONAL SEAL

NOT FOR CONSTRUCTION OR PERMITTING; PRINTED FOR REVIEW ONLY
01/14/2020
M. JACQUELINE CHANG, P.E.
TEXAS #124887

LOGO/CONTACT

martinez ARCHITECTURE
Martinez Architect, LP
900 Rockmead, Suite 250
Houston, Texas 77339
281.346.7371

DESIGN TEAM

Architectural
Martinez Architects

Civil Engineer
Maverick Engineering

Structural
Matrix Structural Engineers

MIE/P/T
DBR

Landscape Architect
KDC Associates

-
Consultant 5 Name

FIRE STATION #5

CITY OF MIDLAND
2210 W GOLF COURSE RD
MIDLAND, TX 79701

PROJECT No: **MA 18017**
DATE: **01/14/2020**

No.	Date	Description

LEVEL 1
LIGHTING PLAN

E101

4.1315

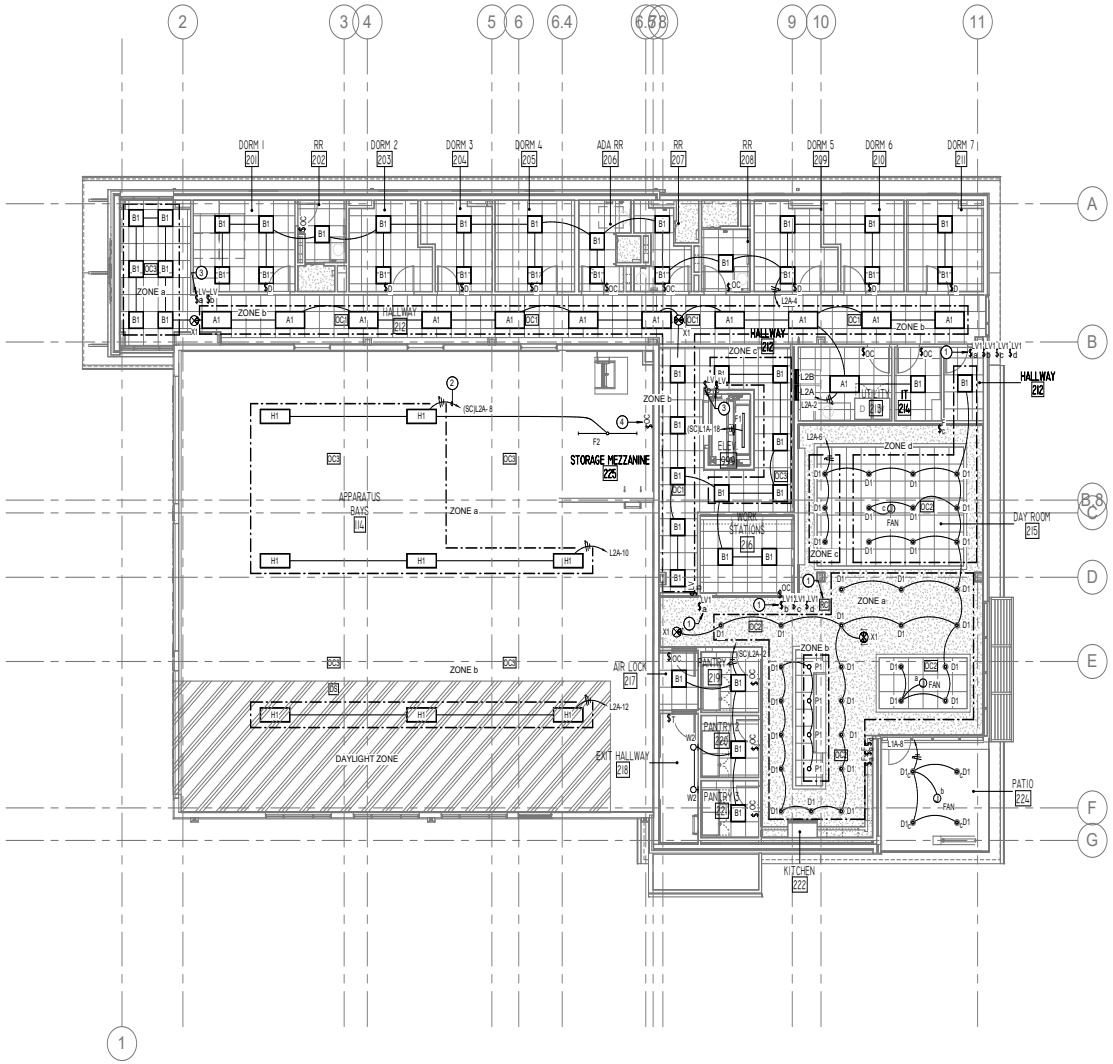

1 LEVEL 2 LIGHTING PLAN
E102 1/8" = 1'-0"

LIGHTING GENERAL NOTES

A. ALL CEILING MOUNTED DEVICES LOCATED IN LAY-IN CEILINGS SHALL BE CENTERED IN THE CEILING TILE.

B. MULTIPLE SWITCHES SHOWN TOGETHER SHALL BE GANGED TOGETHER UNDER A COMMON COVER PLATE.

C. CONTRACTOR SHALL INDICATE LIGHTING CIRCUIT SERVING EACH SWITCH BY PROVIDING TYPE WRITTEN LABELING LOCATED ON INSIDE FACE OF EACH SWITCH COVER PLATE.

D. SPRINKLER CONTRACTOR SHALL COORDINATE SPRINKLER HEAD LOCATIONS WITH CEILING MOUNTED LIGHTING FIXTURES.

E. LOWER CASE CHARACTER ADJACENT TO SWITCH AND/OR LIGHTING FIXTURE INDICATES SWITCHING GROUP.

F. ELECTRICAL CONTRACTOR SHALL COORDINATE INSTALLATION OF ALL RECESSED LIGHTING FIXTURES WITH THE CEILING INSTALLER, TO PROVIDE FIRE PROTECTION AS DESCRIBED IN THE UL FIRE RESISTANCE DIRECTORY STANDARD APPROPRIATED TO THE CEILING ASSEMBLY INSTALLED AND FIRE RATING REQUIRE. REFER TO THE ARCHITECTURAL DRAWINGS FOR UL DESIGN NUMBER. REFER TO DETAIL 11 SHEET E302.

G. REFER TO LIGHTING CONTROL DEVICE SCHEDULE ON SHEET E501 FOR CONTROLLABILITY AND MANUFACTURER/PRODUCT # INFORMATION ON ALL LIGHTING CONTROL DEVICES.

LIGHTING KEYED NOTES

1. PROVIDE ROOM CONTROLLER LIGHTING CONTROL SYSTEM FOR KITCHEN/DINING/DAY ROOM LIGHTING CONTROL. REFER TO LIGHTING CONTROL DEVICE SCHEDULE FOR MORE INFORMATION.
2. REFER TO LEVEL 1 LIGHTING PLAN FOR APPARATUS BAY LIGHTING CONTROL AND CIRCUIT CONTINUATION.
3. REFER TO LEVEL 1 LIGHTING PLAN FOR LIGHTING CONTROL CONTINUATION.
4. LIGHT CONTROL FOR MEZZANINE STORAGE STRIP FIXTURE. REFER TO LIGHTING CONTROL DEVICE SCHEDULE FOR MORE INFORMATION.

TRUE NORTH
PROJECT NORTH

DBR
9601 McAllister Freeway, Suite 410
San Antonio, Texas 78216
210.546.0200 p
210.546.0201 f
TBPE Firm Registration No. 2234

DBR Project Number 196023.000

JC	BV	CL	WJ	MC

PROFESSIONAL SEAL

NOT FOR CONSTRUCTION OR PERMITTING; PRINTED FOR REVIEW ONLY
01/14/2020
M. JACQUELINE CHANG, P.E.
TEXAS #124887

LOGO/CONTACT

martinez ARCHITECTS
Martinez Architect, LP
900 Rockmead, Suite 250
Houston, Texas 77339
281.346.7371

DESIGN TEAM

Architectural
Martinez Architects

Civil Engineer
Maverick Engineering

Structural
Matrix Structural Engineers

MIE/P/T
DBR

Landscape Architect
KDC Associates

-
Consultant 5 Name

FIRE STATION #5

CITY OF MIDLAND
2210 W GOLF COURSE RD
MIDLAND, TX 79701

PROJECT No: MA 18017
DATE: 01/14/2020

No.	Date	Description

LEVEL 2 & 3 LIGHTING PLAN

E102

4.1316

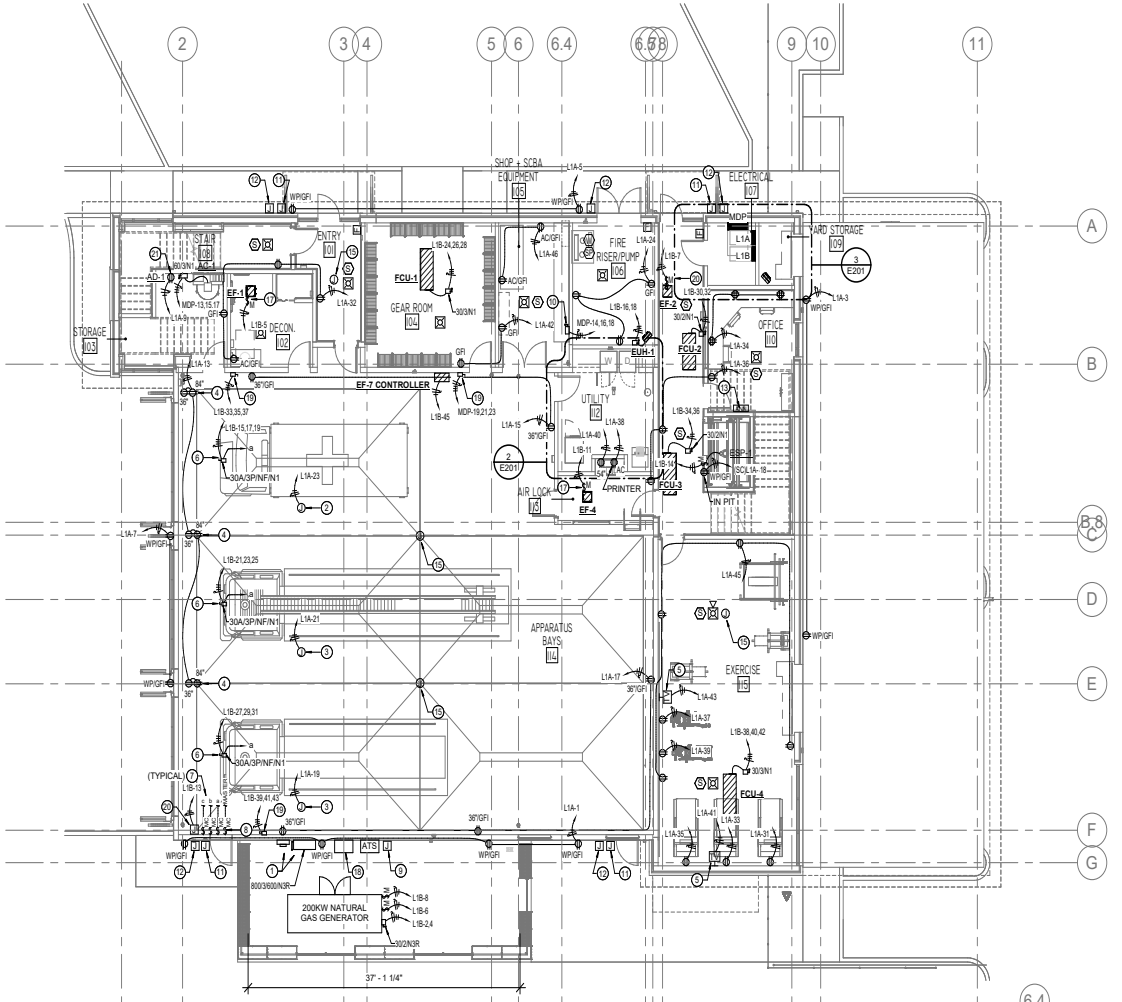

1 LEVEL 1 POWER PLAN
E201 — 1/8" = 1'-0"

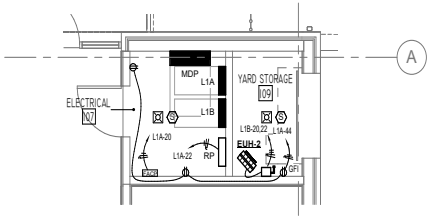

3 ENLARGED POWER PLAN - ELECTRICAL 107
E201 — 1/4" = 1'-0"

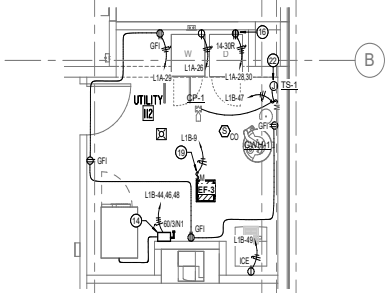

2 ENLARGED POWER PLAN - UTILITY 112
E201 — 1/4" = 1'-0"

ELECTRICAL GENERAL NOTES

A. ELECTRICAL CONTRACTOR SHALL GROUP HOMERUNS WITH THREE HOTS (A,B, AND C PHASE), AND #10 NEUTRAL TO PROVIDE MULTI-WIRE BRANCH CIRCUITS. NO MORE THAN 1 MULTI-WIRE HOMERUNS PER CONDUIT. CONTRACTOR SHALL PROVIDE HANDLE TIES MANUFACTURED BY THE SWITCH GEAR SUPPLIER ON ALL MULTI-WIRE CIRCUITS TO MEET THE REQUIREMENTS OF ARTICLE 210.4(B) OF THE 2017 NEC. AT THE CONTRACTOR'S OPTION, TWO AND THREE POLE BREAKERS MAY BE USED.

B. CONTRACTOR SHALL VERIFY DEVICE LOCATIONS WITH ARCHITECT PRIOR TO ROUGH-IN. REFER TO ARCHITECTURAL CASEWORK AND MILLWORK ELEVATIONS.

C. ELECTRICAL CONTRACTOR SHALL PROVIDE CONDUIT, OUTLET BOXES, JUNCTION BOXES FOR ALL TECHNOLOGY DEVICE OUTLETS. REFER TO DIVISION 26 SPECIFICATIONS AND TECHNOLOGY DRAWINGS FOR ALL WORK REQUIRED.

D. HVAC AND PLUMBING EQUIPMENT MAY DIFFER FROM LOCATIONS AS SHOWN ON ELECTRICAL DRAWINGS. COORDINATE EXACT LOCATIONS WITH MECHANICAL AND PLUMBING CONTRACTOR.

E. ENGRAVE ALL COVER PLATES WITH PANEL NAME AND CIRCUIT NUMBER. PROVIDE SEPARATE PRICE FOR THIS WORK. CONTRACTOR SHALL ARRANGE PANEL BOARDS TO PROVIDE CLEARANCE PER NEC 110.26.

F. ALL SINGLE-PHASE RECEPTACLES RATED 150 VOLTS TO GROUND, OR LESS, 50 AMPERES OR LESS AND THREE-PHASE RECEPTACLES RATED 150 VOLTS TO GROUND OR LESS, 100A OR LESS, IN FOOD SERVICE AREAS, BATHROOMS, ROOFTOPS, OUTDOORS, INDOOR WET LOCATIONS, LOCKER ROOMS, OR CRAWL SPACES SHALL BE GFCI, IN ACCORDANCE WITH NEC 210.8(B).

G. ELECTRICAL CONTRACTOR TO COORDINATE WITH PURVIS INSTALLER FOR ALL REQUIREMENTS PRIOR TO ROUGH-IN.

H. ELECTRICAL CONTRACTOR SHALL PROVIDE CONTACTOR FOR SHUTOFF TO ELECTRIC OVEN. MUST BE TIED INTO PURVIS SYSTEM. MANUAL RESET FOR GAS AND ELECTRICAL SHUTOFFS BY ELECTRICAL CONTRACTOR.

I. ALL EXTERIOR EQUIPMENT (SPECIFICALLY THE GENERATOR AND MECHANICAL EQUIPMENT) MUST MEET THE TEXAS DEPARTMENT OF INSURANCE WIND LOAD REQUIREMENTS.

ELECTRICAL KEYED NOTES

1. PROPOSED LOCATION FOR ELECTRICAL SERVICE EQUIPMENT. FIELD COORDINATE INSTALLATION WITH POWER COMPANY, REFER TO ONE LINE DIAGRAM ON SHEET E401 FOR ADDITIONAL INFORMATION.
2. PROVIDE RETRACTABLE POWER CORD REEL WITH 120V 20A RECEPTACLE, FURNISHED WITH PIVOT BASE. PROVIDE DUPLEX RECEPTACLE AT CORD REEL BASE. FIELD COORDINATE EXACT LOCATION, CABLE LENGTH AND ADDITIONAL REQUIREMENTS WITH ARCHITECT/OWNER PRIOR TO ROUGH-IN. PROVIDE WITH QUICK RELEASE PLUG. RE 4/E602.
3. PROVIDE RETRACTABLE POWER CORD REEL WITH 120V 20A RECEPTACLE, FURNISHED WITH 120V 20A RECEPTACLE. PROVIDE DUPLEX RECEPTACLE AT CORD PROVIDE DUPLEX RECEPTACLE AT CORD REEL BASE. FIELD COORDINATE EXACT LOCATION, CABLE LENGTH AND ADDITIONAL REQUIREMENTS WITH ARCHITECT/OWNER PRIOR TO ROUGH-IN. PROVIDE WITH QUICK RELEASE PLUG. RE 4/E602.
4. RECEPTACLES FOR TURN OUT TIMER. COORDINATE MOUNTING HEIGHTS AND ALL REQUIREMENTS WITH OWNER PRIOR TO ROUGH IN.
5. POWER AND A/V OUTLETS FOR WALL MOUNTED TELEVISION. FIELD COORDINATE EXACT LOCATION WITH ARCHITECT/OWNER PRIOR TO ROUGH-IN. COORDINATE PURVIS SYSTEM WITH TECHNOLOGY DRAWINGS.
6. PROVIDE POWER CONNECTION TO BAY DOOR MOTOR CONTROLLER. FIELD COORDINATE EXACT LOCATION, CONTROL WIRING QUANTITIES AND ADDITIONAL REQUIREMENTS WITH DOOR INSTALLER PRIOR TO ROUGH-IN. ROUTE (1) 3/4" CONDUIT WITH CONTROL WIRE TO ASSOCIATED OPEN/CLOSE SWITCH.
7. PROVIDE OPEN/CLOSE CONTROL SWITCH FOR MOTORIZED FOLDING DOOR. FIELD COORDINATE EXACT LOCATION WITH ARCHITECT/OWNER PRIOR TO ROUGH-IN.
8. PROVIDE OPEN/CLOSE MASTER CONTROL SWITCH. COORDINATE EXACT LOCATION WITH ARCHITECT AND DOOR INSTALLER PRIOR TO ROUGH-IN. SWITCH SHALL CONTROL ALL 3 FRONT FOLDING DOORS.
9. 120V JUNCTION BOX CONNECTION FOR IRRIGATION CONTROLLER. FIELD COORDINATE EXACT LOCATION, MOUNTING HEIGHT AND ADDITIONAL REQUIREMENTS WITH LANDSCAPE CONTRACTOR PRIOR TO ROUGH-IN.
10. PROVIDE 100A/3P/NF/N1 SAFETY DISCONNECT RATED FOR 20 HP MINIMUM FOR CASCADE COMPRESSOR. FIELD COORDINATE EXACT LOCATION AND ADDITIONAL EQUIPMENT REQUIREMENTS WITH INSTALLER PRIOR PLACEMENT.
11. PROVIDE BACK BOX FOR WALL MOUNTED CALL BUTTON. FIELD COORDINATE EXACT LOCATION AND ADDITIONAL REQUIREMENTS WITH TECHNOLOGY CONTRACTOR AND OWNER PRIOR TO ROUGH-IN. ROUTE (1) 1" CONDUIT WITH PULLSTRING FROM BACK BOX TO UP ABOVE CEILING. PROVIDE WEATHER PROOF BACK-BOXES FOR OUTDOOR DEVICES.
12. PROVIDE 120V JUNCTION BOX CONNECTION FOR CARD READER. FIELD COORDINATE EXACT LOCATION WITH ARCHITECT/ OWNER.
13. GENERATOR REMOTE ANNUNCIATOR. COORDINATE EXACT LOCATION WITH OWNER BEFORE ROUGH-IN.
14. 60A/3P/NF/N1 SAFETY DISCONNECT FOR EXTRACTOR WASHER, FIELD COORDINATE EXACT LOCATION AND ADDITIONAL REQUIREMENTS WITH EQUIPMENT INSTALLER PRIOR TO ROUGH-IN. SAFETY DISCONNECT SHALL BE RATED FOR 5 H.P. MINIMUM.
15. PROVIDE JUNCTION BOX FOR ALERTING SYSTEM DEVICE PROVIDED BY OTHERS. PROVIDE CONDUIT TO ABOVE ACCESSIBLE CEILING AREA. COORDINATE WITH ARCHITECT AND OWNER PRIOR TO ROUGH-IN.
16. VERIFY EXACT NEMA CONFIGURATION WITH EQUIPMENT MANUFACTURER PRIOR TO INSTALLATION.
17. EXTEND CIRCUIT TO INTEGRAL FAN -MOUNTED MOTOR RATED TOGGLE SWITCH. FAN TO BE INTERLOCKED WITH DEDICATED SWITCH/THERMOSTAT IN ASSOCIATED ROOM.
18. GENERATOR DOCKING STATION. REFER TO ELECTRICAL ONE-LINE DIAGRAM FOR ADDITIONAL INFORMATION.
19. COMBINATION MOTOR STARTER/DISCONNECT SWITCH PROVIDED BY DIVISION 23, INSTALLED BY DIVISION 26.
20. FOLDING DOOR MANUFACTURER TO PROVIDE CONTROL PANEL. REFER TO MANUFACTURER SPECIFICATIONS FOR ALL NECESSARY RELAYS AND COMPONENTS FOR A COMPLETE WORKING SYSTEM.
21. PROVIDE 20A RECEPTACLE FOR AIR DRYER(AD-1). COORDINATE EXACT LOCATION WITH DIVISION 23 INSTALLER.
22. PROVIDE 120V POWER FOR TIMESWITCH (TS-1). COORDINATE EXACT LOCATION WITH DIVISION 23 INSTALLER.

DBR
9601 McAllister Freeway, Suite 410
San Antonio, Texas 78216
210.546.0200 p
210.546.0201 f
TBPE Firm Registration No. 2234

TRUE NORTH / PROJECT NORTH

DBR Project Number 196023.000

JC	BV	CL	WJ	MC

PROFESSIONAL SEAL

NOT FOR CONSTRUCTION OR PERMITTING; PRINTED FOR REVIEW ONLY
01/14/2020
M. JACQUELINE CHANG, P.E.
TEXAS #124987

LOGO/CONTACT

martinez ARCHITECTS
Martinez Architect, LP
900 Rockmead, Suite 250
Houston, Texas 77339
281.346.7371

DESIGN TEAM

Architectural
Martinez Architects

Civil Engineer
Maverick Engineering

Structural
Matrix Structural Engineers

MEP/FP
DBR

Landscape Architect
KDC Associates

-
Consultant 5 Name

FIRE STATION #5

CITY OF MIDLAND
2210 W GOLF COURSE RD
MIDLAND, TX 79701

PROJECT No: MA 18017
DATE: 01/14/2020

No.	Date	Description

LEVEL 1 POWER PLAN

E201

4.1317

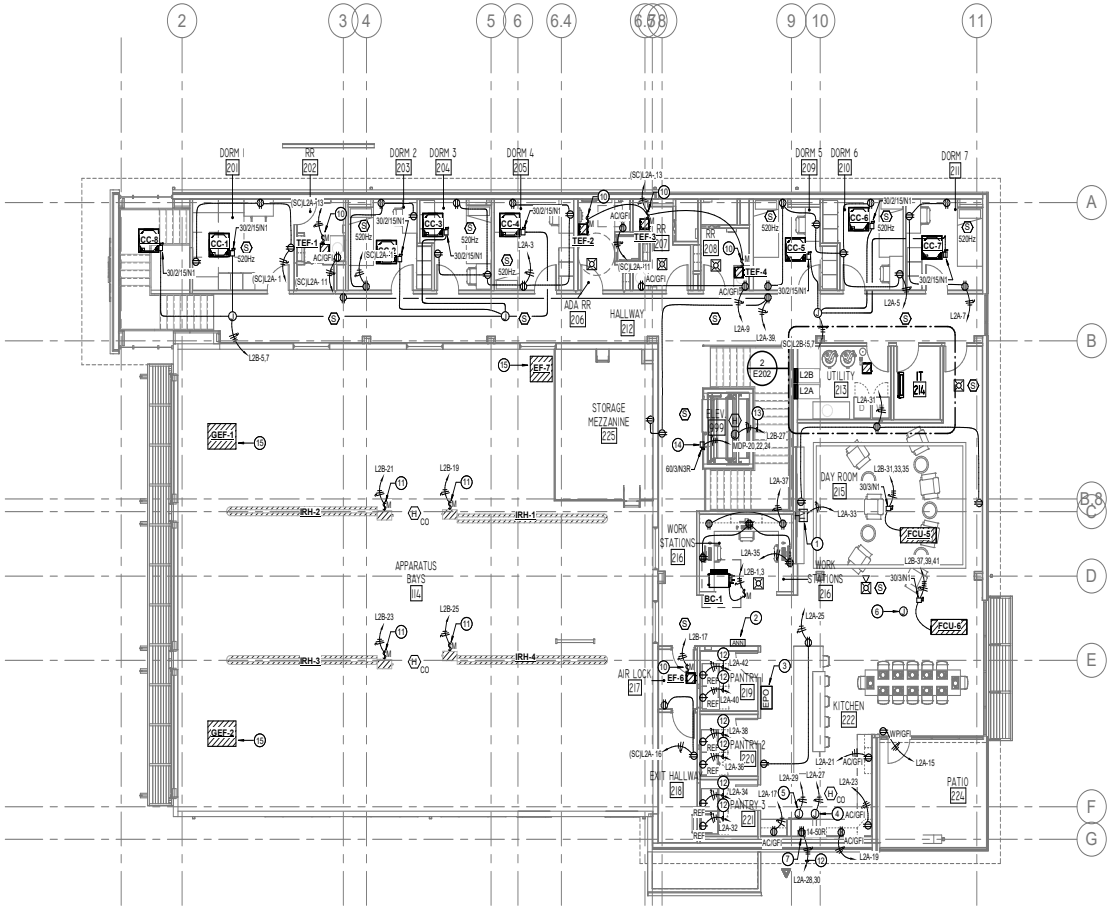

1 LEVEL 2 POWER PLAN
E202 — 1/8" = 1'-0"

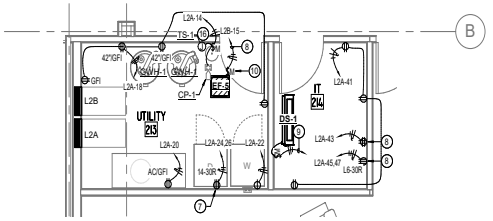

2 ENLARGED LEVEL 2 POWER PLAN - UTILITY/IT
E202 — 1/4" = 1'-0"

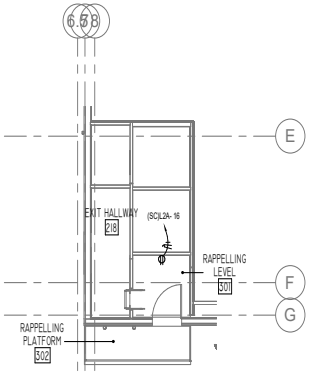

3 LEVEL 3 POWER PLAN
E202 — 1/8" = 1'-0"

ELECTRICAL GENERAL NOTES

A. ELECTRICAL CONTRACTOR SHALL GROUP HOMERUNS WITH THREE HOTS (A,B, AND C PHASE), AND #10 NEUTRAL TO PROVIDE MULTI-WIRE BRANCH CIRCUITS. NO MORE THAN 1 MULTI-WIRE HOMERUNS PER CONDUIT. CONTRACTOR SHALL PROVIDE HANDLE TIES MANUFACTURED BY THE SWITCH GEAR SUPPLIER ON ALL MULTI-WIRE CIRCUITS TO MEET THE REQUIREMENTS OF ARTICLE 210.4(B) OF THE 2017 NEC. AT THE CONTRACTOR'S OPTION, TWO AND THREE POLE BREAKERS MAY BE USED.

B. CONTRACTOR SHALL VERIFY DEVICE LOCATIONS WITH ARCHITECT PRIOR TO ROUGH-IN. REFER TO ARCHITECTURAL CASEWORK AND MILLWORK ELEVATIONS.

C. ELECTRICAL CONTRACTOR SHALL PROVIDE CONDUIT, OUTLET BOXES, JUNCTION BOXES FOR ALL TECHNOLOGY DEVICE OUTLETS. REFER TO DIVISION 26 SPECIFICATIONS AND TECHNOLOGY DRAWINGS FOR ALL WORK REQUIRED.

D. HVAC AND PLUMBING EQUIPMENT MAY DIFFER FROM LOCATIONS AS SHOWN ON ELECTRICAL DRAWINGS. COORDINATE EXACT LOCATIONS WITH MECHANICAL AND PLUMBING CONTRACTOR.

E. ENGRAVE ALL COVER PLATES WITH PANEL NAME AND CIRCUIT NUMBER. PROVIDE SEPARATE PRICE FOR THIS WORK. CONTRACTOR SHALL ARRANGE PANEL BOARDS TO PROVIDE CLEARANCE PER NEC 110.26.

F. ALL SINGLE-PHASE RECEPTACLES RATED 150 VOLTS TO GROUND, OR LESS, 50 AMPERES OR LESS AND THREE-PHASE RECEPTACLES RATED 150 VOLTS TO GROUND OR LESS, 100A OR LESS, IN FOOD SERVICE AREAS, BATHROOMS, ROOFTOPS, OUTDOORS, INDOOR WET LOCATIONS, LOCKER ROOMS, OR CRAWL SPACES SHALL BE GFCI, IN ACCORDANCE WITH NEC 210.8(B).

G. ELECTRICAL CONTRACTOR TO COORDINATE WITH PURVIS INSTALLER FOR ALL REQUIREMENTS PRIOR TO ROUGH-IN.

H. ELECTRICAL CONTRACTOR SHALL PROVIDE CONTACTOR FOR SHUTOFF TO ELECTRIC OVEN. MUST BE TIED INTO PURVIS SYSTEM. MANUAL RESET FOR GAS AND ELECTRICAL SHUTOFFS BY ELECTRICAL CONTRACTOR.

I. ALL EXTERIOR EQUIPMENT SPECIFICALLY THE GENERATOR AND MECHANICAL EQUIPMENT MUST MEET THE TEXAS DEPARTMENT OF INSURANCE WIND LOAD REQUIREMENTS.

ELECTRICAL KEYED NOTES

1. POWER AND A/V OUTLETS FOR WALL MOUNTED TELEVISION. FIELD COORDINATE EXACT LOCATION WITH ARCHITECT/OWNER PRIOR TO ROUGH-IN. COORDINATE PURVIS SYSTEM WITH TECHNOLOGY DRAWINGS.
2. FIRE ALARM REMOTE ANNUNCIATOR. COORDINATE EXACT LOCATION WITH OWNER BEFORE ROUGH-IN.
3. PROVIDE EMERGENCY PUSH BUTTON, BUTTON SHALL DISCONNECT ALL ELECTRICAL CIRCUITS SERVING ABOVE COUNTER RECEPTACLES, RANGE, MICROWAVE AND SHUT GAS DOWN SERVING RANGE. FIELD COORDINATE EXACT LOCATION WITH ARCHITECT/OWNER PRIOR TO ROUGH-IN.
4. 120V JUNCTION BOX CONNECTION FOR RANGE HOOD LIGHTS AND FAN. FIELD COORDINATE EXACT LOCATION AND ADDITIONAL REQUIREMENTS WITH ARCHITECT/OWNER PRIOR TO ROUGH-IN. PROVIDE ADA COMPLIANT SWITCHES FOR HOOD AND HOOD LIGHT.
5. PROVIDE POWER FOR FIRE SUPPRESSION SYSTEM. SYSTEM IS TO BE TIED INTO FIRE ALARM CONTROL PANEL.
6. PROVIDE JUNCTION BOX FOR ALERTING SYSTEM DEVICE PROVIDED BY OTHERS. PROVIDE CONDUIT TO ABOVE ACCESSIBLE CEILING AREA. COORDINATE WITH ARCHITECT AND OWNER PRIOR TO ROUGH-IN.
7. VERIFY EXACT NEMA CONFIGURATION WITH EQUIPMENT MANUFACTURER PRIOR TO INSTALLATION.
8. PROVIDE (1) 30A @208V SPECIAL RECEPTACLE AND (1) QUAD 5-20R RECEPTACLES INSIDE IT ROOM. FIELD COORDINATE EXACT LOCATION AND NEMA CONFIGURATION OF SPECIAL RECEPTACLE WITH TECHNOLOGY CONTRACTOR PRIOR TO ROUGH-IN.
9. MINI-SPLIT INDOOR EVAPORATOR UNIT SHALL RECEIVE POWER FROM ASSOCIATED ROOFTOP CONDENSING UNIT WITH FIELD SUPPLIED WIRING.
10. EXTEND CIRCUIT TO INTEGRAL FAN -MOUNTED MOTOR RATED TOGGLE SWITCH. FAN TO BE INTERLOCKED WITH DEDICATED SWITCH/THERMOSTAT IN ASSOCIATED ROOM.
11. PROVIDE CONNECTION TO INFRARED HEATER DISCONNECT SWITCH, PROVIDED BY DIVISION 23. COORDINATE EXACT LOCATION OF DISCONNECT SWITCH WITH MECHANICAL.
12. EXTEND APPLIANCE CIRCUIT THROUGH GFI CIRCUIT BREAKER.
13. PROVIDE CONNECTION TO ELEVATOR CAB LIGHTS/FAN/RECEPTACLE. COORDINATE EXACT LOCATION WITH ELEVATOR INSTALLER.
14. PROVIDE BUSSMANN ELEVATOR DISCONNECT MODULE FOR ELEVATOR CONTROLLER CONNECTION. COORDINATE EXACT LOCATION WITH ELEVATOR INSTALLER.
15. REFER TO SHEET E201 FOR COMBINATION MOTOR STARTER/DISCONNECT SWITCH LOCATION. MOTOR START/DISCONNECT SWITCH PROVIDED BY DIVISION 23, INSTALLED BY DIVISION 26.
16. PROVIDE 120V POWER FOR TIMESWITCH (TS-1). COORDINATE EXACT LOCATION WITH DIVISION 22 INSTALLER.

TRUE NORTH | PROJECT NORTH

DBR
9601 McAllister Freeway, Suite 410
San Antonio, Texas 78216
210.546.0200 p
210.546.0201 f
TBPE Firm Registration No. 2234

DBR Project Number 196023.000

JC	BV	CL	WJ	MC

PROFESSIONAL SEAL

NOT FOR CONSTRUCTION OR PERMITTING; PRINTED FOR REVIEW ONLY
01/14/2020
M. JACQUELINE CHANG, P.E.
TEXAS #124987

LOGO/CONTACT

martinez ARCHITECTS
Martinez Architect, LP
900 Rockmead, Suite 250
Houston, Texas 77339
281.346.7371

DESIGN TEAM

Architectural
Martinez Architects

Civil Engineer
Maverick Engineering

Structural
Matrix Structural Engineers

MIE/P/T
DBR

Landscape Architect
KDC Associates

-
Consultant 5 Name

FIRE STATION #5
CITY OF MIDLAND
2210 W GOLF COURSE RD
MIDLAND, TX 79701

PROJECT No: MA 18017
DATE: 01/14/2020

No.	Date	Description

LEVEL 2 & 3 POWER PLAN

E202

4.1318

SPD SCHEDULE

MARK	MANUFACTURER	MODEL	VOLTAGE	PER MODE/PHASE	PHASE	BREAKER SIZE	ACCUGUIDE CABLE SIZE
SPD1	ASCO (LIEBERT)	560120YP16ACCG10	208/120	80/160KA	3	60A/3P	5 #10, 1-1/2" C.
SPD2	ASCO (LIEBERT)	510120YP16ACAJ20	208/120	80/160KA	3	30A/3P	5 #10, 1-1/2" C.

ELECTRICAL SERVICE SCOPE:

THE CONTRACTOR SHALL BE RESPONSIBLE FOR DELIVERY OF SERVICE TO THE NEW BLDG. COORDINATE ALL REQUIREMENTS AND COSTS AND LABOR W/ LOCAL UTILITY PRIOR TO BID. ALL COSTS ASSOCIATED W/ THE DELIVERY OF ELECTRICAL SERVICE SHALL BE INCLUDED AS A PART OF THIS CONTRACT. REFER TO SPECIFICATIONS FOR ADDITIONAL REQUIREMENTS.

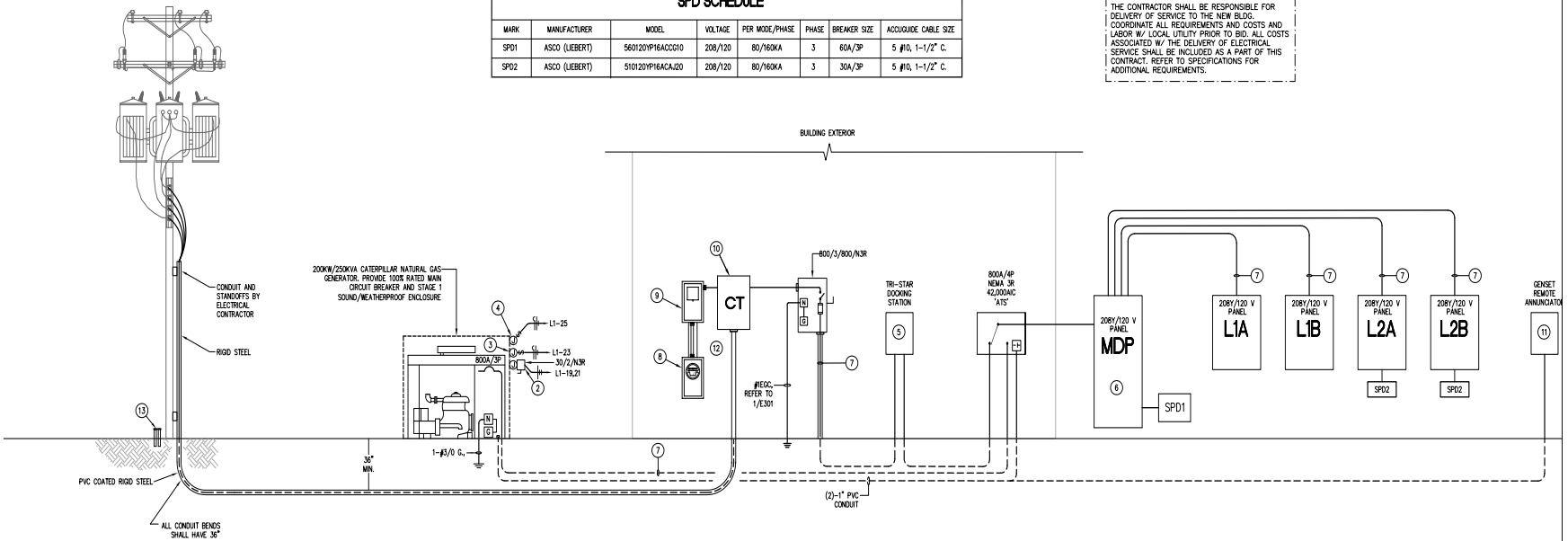

1 E401 ELECTRICAL ONE-LINE DIAGRAM

NOT TO SCALE

LOAD ANALYSIS - MIDLAND FIRE STATION #5

208 / 120, 3-PHASE 4-WIRE — Date: 1/14/2020

DESCRIPTION	11,099 S.F.			NEC	KVA
LIGHTING:					
INTERIOR =	11,099 S.F.		3 VA/S.F. X 125%	210.20(a)	41.6
EXTERIOR =	500 VA	X 125%			0.6
POWER:					
RECEPTACLES =	11,099 S.F.		1 VA/S.F.	220.44	11.1
MISCELLANEOUS =	11,099 VA		1 VA/S.F.		11.1
ELEVATOR =	22,373 VA				22.4
HVAC:					
FANS =	12,384 VA				24.8
COOLING =	28,397 VA			220.60	0.0
HEATING=	38,300 VA			220.60	38.3
	Load		Quantity		
Cascade Equipment	31,000 VA	X	1.0		31.0
Compressor	12,000 VA	X	1.0		12.0
Overhead Door	1,200 VA	X	3.0		3.6
Range	8,000 VA	X	1.0		8.0
Hood	800 VA	X	1.0		0.8
Washer	1,200 VA	X	1.0		1.2
Dryer	4,000 VA	X	1.0		4.0
Extractor/Washer	8,000 VA	X	1.0		8.0
25% LARGEST MOTOR =	5,593 VA			430.24	5.6
PLUMBING:					
WATER HEATER =	12,000 VA				12.0
				TOTAL =	236.1
SQUARE FOOTAGE = 11,099				TOTAL AMPS:	655.3
				SERVICE SIZE:	800.0
				SPARE AMPACITY	144.7

SERVICE LATERAL AND FEEDER SCHEDULE (COPPER ONLY)

AMPERAGE	SETS	CONDUCTOR SIZE	CONDUIT (INCHES)
30A	1	4#10, 1#10 G.	3/4"C
40A	1	4#8, 1#10 G.	1"C
50A	1	4#8, 1#10 G.	1"C
60A	1	4#6, 1#10 G.	1"C
70A	1	4#4, 1#8 G.	1 1/4"C
80A	1	4#4, 1#8 G.	1 1/4"C
90A	1	4#3, 1#8 G.	1 1/4"C
100A	1	4#3, 1#8 G.	1 1/4"C
125A	1	4#1, 1#6 G.	1 1/2"C
150A	1	4#1/0, 1#6 G.	1 1/2"C
175A	1	4#2/0, 1#6 G.	2"C
200A	1	4#3/0, 1#6 G.	2"C
225A	1	4#4/0, 1#4 G.	2 1/2"C
250A	1	4#250KCMIL, 1#4 G.	2 1/2"C
300A	1	4#350KCMIL, 1#4 G.	3"C
350A	1	4#500KCMIL, 1#3 G.	3 1/2"C
400A	1	4#600KCMIL, 1#3 G.	4"C
450A	2	4#4/0, 1#2 G.	2 1/2"C
500A	2	4#250KCMIL, 1#2G.	2 1/2"C
600A	2	4#350KCMIL, 1#1G.	3"C
800A	2	4#600KCMIL, 1#1/0G.	4"C

1. ELECTRICAL CONTRACTOR SHALL PROVIDE THE NUMBER OF LUGS AND PROPER LUG SIZES TO ACCEPT CONDUCTOR SIZES SHOWN.
2. DO NOT PROVIDE GROUNDING CONDUCTOR IN SERVICE LATERAL FROM POWER COMPANY TRANSFORMER.
3. CONTRACTOR SHALL INCREASE FEEDERS IN SIZE TO COMPENSATE FOR VOLTAGE DROP. FEEDERS SHALL BE SIZED TO MAINTAIN A 2% OR LESS VOLTAGE DROP ON FEEDERS AND A 3% OR LESS VOLTAGE DROP ON BRANCH CIRCUITS.

ONE-LINE DIAGRAM GENERAL NOTES:

A. MANUFACTURER OF ELECTRICAL GEAR SHALL PROVIDE A COORDINATION STUDY FOR THE ENTIRE ELECTRICAL SYSTEM IN ORDER TO SET BREAKERS. REFER TO SPECIFICATIONS. MANUFACTURER SHALL ALSO PROVIDE A FAULT CURRENT/ARC FAULT STUDY FOR THE ENTIRE ELECTRICAL SYSTEM IN ORDER TO SELECT INTERRUPTING RATINGS OF ALL CIRCUIT BREAKERS, DISTRIBUTION PANELBOARDS, PANELBOARDS, ETC. A FULLY RATED SYSTEM SHALL BE USED.

B. CONTRACTOR SHALL PROVIDE AN ENGRAVED NAMEPLATE ON ALL NEW ELECTRICAL EQUIPMENT INDICATION EQUIPMENT VOLTAGE,AMPERAGE AND AVAILABLE SHORT CIRCUIT RATING PER 2018 NEC.

C. METERING EQUIPMENT ENCLOSURE PROVIDED BY ENCOR, INSTALLED BY ELECTRICAL CONTRACTOR PER ENCOR'S SPECIFICATIONS. METER INSTALLED BY ENCOR.

D. ALL CONDUCTORS SHALL BE COPPER.

E. CONTRACTOR SHALL INSTALL FEEDERS BASED ON THE OVERCURRENT DEVICE RATING UNLESS OTHERWISE NOTED. CONTRACTOR SHALL REFER TO THE FEEDER SCHEDULE TO OBTAIN AND INSTALL THE FEEDERS REQUIRED.

F. PRIOR TO INSTALLATION OF UNDERGROUND FEEDERS, THE ELECTRICAL CONTRACTOR SHALL SUBMIT AN UNDERGROUND ROUTING PLAN TO THE ENGINEER OF RECORD., INDICATING THE EXACT ROUTING PATH FOR ALL UNDERGROUND CONDUIT. INDICATE STUB-UP LOCATIONS, SIZE AND QUANTITY OF CONDUIT. ALL ELECTRICAL PANELS AND EQUIPMENT SHALL BE SHOWN ON THIS PLAN FOR REFERENCE OF CONDUIT TERMINATION.

ELECTRICAL KEYED NOTES:

1. NOT USED
   NOT USED
2. 208V JUNCTION BOX CONNECTION TO GENERATOR'S JACKET HEATER. FIELD COORDINATE EXACT LOCATION AND ADDITIONAL MANUFACTURER'S REQUIREMENTS WITH GENERATOR INSTALLER PRIOR TO ROUGH-IN.
3. 120V JUNCTION BOX CONNECTION FOR GENERATOR'S ANTI-CONDENSATION HEATER, FIELD COORDINATE EXACT LOCATION AND ADDITIONAL MANUFACTURER'S REQUIREMENTS WITH GENERATOR INSTALLER PRIOR TO ROUGH-IN.
4. 120V JUNCTION BOX CONNECTION FOR BATTERY CHARGER. FIELD COORDINATE EXACT LOCATION AND ADDITIONAL MANUFACTURER'S REQUIREMENTS WITH GENERATOR INSTALLER PRIOR TO ROUGH-IN.
5. PROVIDE 800A TRYSTAR DOCKING STATION FOR TEMPORARY GENERATOR/LOAD BANK.
6. REFER TO SCHEDULE ON SHEET E502 FOR CIRCUIT BREAKER SIZES.
7. REFER TO FEEDER SCHEDULES ON THIS SHEET FOR WIRE AND CONDUIT SIZE AND QUANTITIES.
8. METER BOX FOR CT RATED METER PROVIDED BY ENCOR, INSTALLED BY ELECTRICAL CONTRACTOR PER ENCOR'S SERVICE STANDARDS.
9. METERING CURRENT TRANSFORMERS BOX PROVIDED BY ENCOR, INSTALLED BY ELECTRICAL CONTRACTOR PER ENCOR'S SERVICE STANDARDS.
10. METERING POTENTIAL TRANSFORMER BOX PROVIDED BY ENCOR, INSTALLED BY ELECTRICAL CONTRACTOR PER ENCOR'S SERVICE STANDARDS.
11. COORDINATE EXACT LOCATION OF ANNUNCIATOR WITH ARCHITECT/OWNER.
12. COORDINATE WITH ENCOR FOR ALL UTILITY STANDARDS.
13. PROVIDE (2) 2" RIGID CONDUITS ON RISER POLE FOR TELECOMMUNICATION CABLING AND CABLE SERVICE. COORDINATE ADDITIONAL REQUIREMENTS WITH OWNER SELECTED PROVIDER. REFER TO MEP SITE PLAN FOR APPROXIMATE ROUTING.

DBR
9601 McAllister Freeway, Suite 410
San Antonio, Texas 78216
210.546.0200 v 210.546.0201 f
TBPE Firm Registration NO. 2234

DBR Project Number 196023.000

JC	BV	CL	WJ	MC

PROFESSIONAL SEAL

NOT FOR CONSTRUCTION OR PERMITTING; PRINTED FOR REVIEW ONLY
01/14/2020
M. JACQUELINE CHANG, P.E.
TEXAS #124697

LOGO/CONTACT

martinez ARCHITECTS
Martinez Architect, LP
900 Rockmead, Suite 250
Houston, Texas 77339
281.346.7371

DESIGN TEAM

Architectural
Martinez Architects

Civil Engineer
Maverick Engineering

Structural
Matrix Structural Engineers

MEP
DBR

Landscaping
KDC Associates

FIRE STATION #5
CITY OF MIDLAND
2200 W GOLF COURSE RD
MIDLAND, TX 79701

PROJECT No: MA 18017
DATE: 01/14/2020

No.	Date	Description

ELECTRICAL ONE-LINE DIAGRAM

E401

4.1319

LIGHTING FIXTURE SCHEDULE

TAG	MANUFACTURER	MODEL	MOUNTING	LAMP	VOLTAGE	APPARENT POWER	DESCRIPTION
A1	PHILIPS - DAYBRITE	2FGG-43L-835-4-DS-UNV-DIM	RECESSED	3500K LED	UNIVERSAL	36 VA	2X4 VOLUMETRIC FIXTURE WITH 4,300 LUMENS AND 3500K.
B1	PHILIPS - DAYBRITE	2FGG-38L-835-2-DS-UNV-DIM	RECESSED	3500K LED	UNIVERSAL	34 VA	2X2 VOLUMETRIC FIXTURE WITH 3,800 LUMENS AND 3500K.
D1	LIGHTOLIER	C4RN-C4L15835MZ10U-C4RDLCC	RECESSED	3500K LED	UNIVERSAL	16 VA	4" MEDIUM BEAM LENSED DOWNLIGHT WITH 1,500 LUMENS AND 3500K.
D2	LIGHTOLIER	C4RN-C4L15835MZ10U-C4RSLCC	RECESSED	3500K LED	UNIVERSAL	16 VA	SAME AS FIXTURE TYPE D1 WITH FLUSH DIFFUSE LENS AND PRE-INSTALLED GASKET.
D3	VERSALED LIGHTING	VP3-Q-S-10L-QT-40K	SURFACE	4000K LED	UNIVERSAL	16 VA	VAPOR PROOF JELLY JAR FIXTURE WITH 800 LUMENS AND 4000K.
F1	PHILIPS - DAYBRITE	V3WEZ440L835UNV	SURFACE	3500K LED	UNIVERSAL	32 VA	4' VAPOR PROOF FIXTURE WITH 4,000 LUMENS AND 3500K.
F2	PHILIPS - DAYBRITE	FSS880L835-UNV-DIM	SURFACE	3500K LED	UNIVERSAL	64 VA	8' INDUSTRIAL STRIP FIXTURE WITH 8000 LUMENS AND 3500K. 8' INDUSTRIAL STRIP FIXTURE WITH LUMENS AND 3500K.
F3	PHILIPS - DAYBRITE	FSS455L835-UNV-DIM	SURFACE	3500K LED	UNIVERSAL	48 VA	4' INDUSTRIAL STRIP FIXTURE WITH 5500 LUMENS AND 3500K. 8' INDUSTRIAL STRIP FIXTURE WITH LUMENS AND 3500K.
H1	PHILIPS - DAYBRITE	FBX38LL35-UNV-LFR	SURFACE	3500K LED	UNIVERSAL	255 VA	4' HIGH BAY FIXTURE WITH 36,000 LUMENS AND 3500K.
P1	LIGHTOLIER	C8PDL15835WZ10UCCW-CACK10WH	PENDANT	3500K LED	UNIVERSAL	15 VA	6" DECORATIVE PENDANT WITH 1,500 LUMENS AND 3500K.
W1	PHILIPS - GARDCO	101L-16L-700-NW-G1-3-UNV-DD-F11-WH	WALL	4000K LED	UNIVERSAL	26 VA	EXERIOR WALL SCONCE WITH 3,200 LUMENS AND 4000K.
W2	LIGHTOLIER	C8WDW15835WZ10UCCW	WALL	3500K LED	UNIVERSAL	26 VA	REPELLING TOWER EXIT HALLWAY WALL SCONCE WITH 1,500 LUMENS AND 3500K.
W3	EDWARDS SIGNALING	105XBRMA120A-105BM-105BX	WALL	AMBER LED	120V	12 VA	FLASHING BEACON AT 7'-0". BEACON SHALL FLASH WHEN ASSOCIATED APPARATUS BAY DOOR IS IN OPERATION. PROVIDE CONTROL RELAY AND TIE INTO OVERHEAD OPERATOR.
X1	EMERGI-LIGHT	CLXARW	UNIVERSAL	LED	UNIVERSAL	2 VA	UNIVERSAL EXIT SIGN WITH CHEVRONS AS INDICATED ON PLANS.

LIGHTING FIXTURE SCHEDULE GENERAL NOTES

A. IT SHALL BE THE RESPONSIBILITY OF THE CONTRACTOR TO CONFIRM THE COMPATIBILITY BETWEEN THE CEILING TYPE, AS DEFINED ON THE ARCHITECTURAL ROOM FINISH SCHEDULE, AND THE LIGHTING FIXTURE TRIM AS DEFINED ON THE LIGHTING FIXTURE SCHEDULE. NO CHANGES OR DEVIATIONS SHALL BE MADE FROM THE CONTRACT DOCUMENTS, HOWEVER, WITHOUT THE WRITTEN APPROVAL OF THE ENGINEER/ARCHITECT.

B. EQUIVALENT PRODUCTS BY THE FOLLOWING MANUFACTURER'S MAY BE ACCEPTABLE AS ALTERNATE SUBSTITUTIONS (ALTERNATE PRODUCTS SHALL HAVE SUFFICIENT DATA FOR REVIEW AND APPROVAL, INCLUDING POINT-BY-POINT ELECTRONIC CALCULATIONS): ACUITY, PHILIPS-DAYBRITE, PHILIPS-LIGHTOLIER, PHILIPS-GARDCO, LSI AND WILLIAMS.

C. ALL LIGHTING FIXTURE COLOR FINISHES/PATTERNS MUST BE SELECTED BY THE ARCHITECT FROM THE MANUFACTURER'S FULL RANGE. THE GENERAL CONTRACTOR IS TO CONFIRM ALL COLORS WITH THE ARCHITECT PRIOR TO ORDERING. ALL FIXTURE COLORS NOT CONFIRMED, SHALL BE CORRECTED AT THE GC'S COST.

D. CONFIRM ALL FIXTURE MOUNTING HEIGHTS WITH THE ARCHITECTURAL DETAILS AND ELEVATIONS PRIOR TO ROUGH-IN.

LIGHTING CONTROL DEVICE SCHEDULE

TAG	DESCRIPTION	MANUFACTURER	MODEL NUMBER	VOLTAGE	CONTROL FUNCTION
D	DIMMER WALL SWITCH	DOUGLAS LIGHTING	WRD-8701	LOW VOLTAGE	1-BUTTON ON/OFF WITH DIMMER
DS	CEILING/STRUCTURE MOUNTED PHOTO SENSOR	DOUGLAS LIGHTING	WPP-INT	LOW VOLTAGE	PHOTO SENSOR TO AUTOMATICALLY DIM LIGHT FIXTURES WITHIN DAY LIGHT ZONE ACCORDING TO AMOUNT OF DAYLIGHT PRESENT
DV	OCCUPANCY SENSOR WALL SWITCH (VACANCY MODE WITH DIMMING)	DOUGLAS LIGHTING	WOSSDD2-P-VW	LOW VOLTAGE	1-BUTTON ON/OFF WALL SWITCH SENSOR WITH DIMMING AND AUTOMATIC OFF AFTER 20 MINUTES OF INACTIVITY
F		DOUGLAS LIGHTING		LOW VOLTAGE	
LV	DIGITAL WALL SWITCH (1-BUTTON)	DOUGLAS LIGHTING	WSW-3511	LOW VOLTAGE	1-BUTTON ON/OFF. ZONES INDICATED ON DRAWINGS
LV1	DIGITAL WALL SWITCH (1-BUTTON WITH DIMMER)	DOUGLAS LIGHTING	WSD-3501	LOW VOLTAGE	1-BUTTON ON/OFF WITH DIMMER. ZONES INDICATED ON DRAWINGS
OC	OCCUPANCY SENSOR WALL SWITCH	DOUGLAS LIGHTING	WOSSIU1-N-VW	LOW VOLTAGE	1-BUTTON ON/OFF WALL SWITCH SENSOR WITH AUTOMATIC ON TO 100%
OC1	CEILING/STRUCTURE MOUNTED OCCUPANCY SENSOR	DOUGLAS LIGHTING	WORSDU1-P-N	LOW VOLTAGE	AUTOMATICALLY TURN ON LIGHTS TO 100%, TURNS OFF LIGHTS AFTER 20 MINUTES OF INACTIVITY
OC2	CEILING/STRUCTURE MOUNTED OCCUPANCY SENSOR	DOUGLAS LIGHTING	WORSDD2-DPR-L	LOW VOLTAGE	AUTOMATICALLY TURN ON LIGHTS TO NOT MORE THAN 50%, TURNS OFF LIGHTS AFTER 20 MINUTES OF INACTIVITY
OC3	CEILING/STRUCTURE MOUNTED OCCUPANCY SENSOR (HIGH BAY)	DOUGLAS LIGHTING	WORBID2-DPR-L	LOW VOLTAGE	AUTOMATICALLY TURN ON LIGHTS TO 100%, TURNS OFF LIGHTS AFTER 20 MINUTES OF INACTIVITY
RC	DIALOG ROOM CONTROLLER	DOUGLAS LIGHTING	WRC-3160	LINE VOLTAGE	ZONE A ON/OFF, ZONE A DIM UP/DOWN, ZONE B ON/OFF, ZONE B DIM UP/DOWN
S	SINGLE POLE ROCKER SWITCH	DOUGLAS LIGHTING		LINE VOLTAGE	ON/OFF
T	SPRING WOUND TIMER	DOUGLAS LIGHTING		LINE VOLTAGE	LINE VOLTAGE TIMER SWITCH
VC	OCCUPANCY SENSOR WALL SWITCH (VACANCY MODE)	DOUGLAS LIGHTING	WOSSIU1-N-VW	LOW VOLTAGE	1-BUTTON ON/OFF WALL SWITCH SENSOR WITH AUTOMATIC OFF AFTER 20 MINUTES OF INACTIVITY

LIGHTING CONTROL DEVICE SCHEDULE GENERAL NOTES

A. REFER TO LIGHTING PLANS FOR ZONE CONTROL INFORMATION AND DEVICE LOCATIONS.

B. ALL DEVICE LOCATIONS SHALL BE COORDINATED WITH OWNER/ARCHITECT PRIOR TO ROUGH-IN.

C. PROVDIE ALL NECESSARY COMPONENTS FOR A FULLY FUNCTIONAL SYSTEM.

LIGHTING CONTROLS/COMMISSIONING PLAN

THE CONTRACTOR SHALL INCLUDE, AS PART OF THEIR SCOPE, THE REQUIREMENTS TO COMMISSION THE LIGHTING CONTROL SYSTEM, AS REQUIRED BELOW. THE LIGHTING CONTROL SYSTEM MAY BE STAND-ALONE, NETWORK, RELAY, CONTACTOR OPERATED, TIMER, PHOTOCELL, OR ANY COMBINATION OF THESE LISTED. FOR EACH OF THE FOLLOWING TASKS, RECORD THE DATE PERFORMED, PERSON(S) COMPLETING THE VERIFICATION, INTIAL SETTING/CONDITION, ACTIONS PERFORMED, AND FINAL SETTING CONDITION. SUBMIT DOCUMENTATION TO THE CITY HAVING JURISDICATION AT OR BEFORE SUBSTANTION COMPLETION. SUBMITTING AFTER SUBSTANTION COMPLETION WILL DELAY THE ISSUANCE OF A CERTIFICATE OF OCCUPANCY.

A. ENSURE ALL LIGHTING FIXTURES HAVE LAMPS THAT ARE FUNCTIONAL.

B. TEST ALL EXIT SIGNS, EMERGENCY LIGHTING FIXTURES, AND EMERGENCY TRANSFER DEVICES OR BATTERY BACKUPS THAT ARE INTEGRAL OR REMOTE.

C. VERIFY THAT ALL OCCUPANCY SENSORS HAVE BEEN INSTALLED AND ARE OPERATIONS.

D. TEST ALL WALL-SWITCH OCCUPANCY SENSORS.

E. TEST ALL DIGITAL/LOW VOLTAGE SWITCHES AND THEIR PERIPHERALS, WHERE INSTALLED, SUCH AS:
   a. OCCUPANCY SENSORS
   b. POWER PACKS
   c. DAYLIGHT SENSORS

F. VERIFY THE FOLLOWING FUNATIONALITY AND/OR INSTALLATION OF ALL CONTROL DEVICES:
   a. SENSORS HAVE BEEN LOCATED AND AIMED TO RELEVANT LOCATIONS OF OCCUPANCY, PER MANUFACTURERS RECOMMENDATION.
   b. VERIFY STATUS INDICATORS ON DEVICES ARE OPERATIONAL AND CORRECT.
   c. DEVICES CONTROL LIGHTING FIXTURES AS SPECIFIED ON THE DRAWINGS.
   d. ALL OCCUPANCY/VACANCY MODE TIME-OUTS ARE SET TO NO GREATER THAN 30 MINUTES.
   e. ALL CONTROL DEVICES ARE SET VACANCY MODE, OR NO MORE THAN 50% OF FIXTURES TURN ON AUTOMATICALLY UPON ENTERING A SPACE/ROOM.
   f. MOVEMENT IN ADJACENT SPACES OR CYCLING OF HVAC SYSTEMS DOES NOT FALSELY TRIGGER SENSORS (VACANCY MODE PREFERRED TO PREVENT THIS).

G. SHOULD ADDITIONAL INFORMATION REGARDING THE TESTING REQUIREMENTS BE NEEDED, REFERENCE IECC 2015 SECTION 408.3.

DBR
9601 McAllister Freeway, Suite 410
San Antonio, Texas 78216
210.546.0200 p
210.546.0201 f
TBPE Firm Registration No. 2234

DBR Project Number 196023.000

JC	BV	CL	WJ	MC

PROFESSIONAL SEAL

NOT FOR CONSTRUCTION OR PERMITTING; PRINTED FOR REVIEW ONLY
01/14/2020
M. JACQUELINE CHANG, P.E.
TEXAS #124987

LOGO/CONTACT

martinez ARCHITECTS
Martinez Architect, LP
900 Rockmead, Suite 250
Houston, Texas 77339
281.346.7371

DESIGN TEAM

Architectural
Martinez Architects

Civil Engineer
Maverick Engineering

Structural
Matrix Structural Engineers

M/E/P/T
DBR

Landscape Architect
KDC Associates

-
Consultant 5 Name

FIRE STATION #5
CITY OF MIDLAND
2210 W GOLF COURSE RD
MIDLAND, TX 79701

PROJECT No: **MA 18017**
DATE: **01/14/2020**

No.	Date	Description

ELECTRICAL SCHEDULES

E501

4.1320

Panelboard MDP

42000 AIC Rating
X New
Existing

120/208 Wye Volt, 3 Phase, 4 Wire; 1 Section; Type 1 -Nema Rating | Mains Type: MLO | 0 A MCB; 600 A BUS (Copper); ISO. GRND. BUS | X Single, Double, Feed - Thru | Mounting: X Surface, Flush

Note	Load...	Type	Description	Wire	CB	CKT	CB	Wire	Description	Type	Load...	N...
	26830 VA	L; R; EL; M	Electrical Panel L1A	4/0	225 A	1 2 3 4 5 6	225 A	4/0	Electrical Panel L1B	F; H; MT; M	67224 VA	
	35336 VA	L; R; SP; MT; M	Electrical Panel L2A	12	20 A	7 8 9 10 11 12	225 A	4/0	Electrical Panel L2B	SP; F; C; H; M	35415 VA	
	9114 VA	MT	Air Compressor	8	50 A	13 14 15 16 17 18	100 A	3	Cascade Machine: Shop 105	MT	22336 VA	
	3963 VA	F	Exhaust Fan: EF-7	8	35 A	19 20 21 22 23 24	60 A	6	Bussmann Elevator Module	E	16212 VA	
	--	--	Space	--	--	25 26	--	--	Space	--	--	
	--	--	Space	--	--	27 28	--	--	Space	--	--	
	--	--	Space	--	--	29 30	--	--	Space	--	--	
	--	--	Space	--	--	31 32	--	--	Space	--	--	
	--	--	Space	--	--	33 34	--	--	Space	--	--	
	--	--	Space	--	--	35 36	--	--	Space	--	--	
	--	--	Space	--	--	37 38						
	--	--	Space	--	--	39 40	60 A	6	SPD1	SP	0 VA	
	--	--	Space	--	--	41 42						

N.E.C. (2017)	Load Type	Conn.	Fct.	Diversity	N.E.C.(2017)	Load Type	Conn.	Fct.	Diversity
220.44	(R)Receptacle	34700 VA	64.41%	22350 VA	210.20(a)	(L)Lighting	7468 VA	125.00%	9336 VA
220.56	(K)Kitchen					(EL)Ext. Ltg.	1468 VA	125.00%	1835 VA
220.60	(C)Cooling	38442 VA	100.00%	0 VA	620.14	(E)Elevators	16212 VA	100.00%	16212 VA
220.60	(H)Heating	54848 VA	100.00%	54848 VA		(WH)Wat. Htr.			
220.60	(F)Fans	1638 VA	100.00%	1638 VA	220.5	(MT)Lrg. Motor	43926 VA	112.71%	49510 VA
	(M)Misc.	23540 VA	100.00%	23540 VA		(SP)Sub Pnl.	0 VA	Not Computed	0 VA

Total Connected Load: 218651 VA VA = 607 A
Total Load (Diversified): 175693 VA VA = 488 A

Location of Panel: YARD STORAGE 109

Panelboard L1A

22000 AIC Rating
X New
Existing

120/208 Wye Volt, 3 Phase, 4 Wire; 1 Section; Type 1 -Nema Rating | Mains Type: MLO | 0 A MCB; 225 A BUS (Copper); ISO. GRND. BUS | X Single, Double, Feed - Thru | Mounting: X Surface, Flush

Note	Load...	Type	Description	Wire	CB	CKT	CB	Wire	Description	Type	Load...	N...
	720 VA	R	Receptacles: Exterior Perimeter	12	20 A	1 2	20 A	12	Lighting: Flagpole	EL	600 VA	
	360 VA	R	Receptacles: Exterior Perimeter	12	20 A	3 4	20 A	12	Lighting: Exterior Egress	EL	104 VA	
	360 VA	R	Receptacles: Exterior Perimeter	12	20 A	5 6	20 A	12	Lighting: Exterior Perimeter	EL	112 VA	
	360 VA	R	Receptacles: Exterior Perimeter	12	20 A	7 8	20 A	12	Lighting: Patio	L	424 VA	
	180 VA	R	Air Dryer	12	20 A	9 10	20 A	12	Lighting: Apparatus Bay Flashers	L	36 VA	
	--	--	Spare	--	20 A	11 12	20 A	12	Lighting: First Level	L	1058 VA	
	1080 VA	R	Turnout Timers	12	20 A	13 14	20 A	12	Lighting: Monument Sign	EL	600 VA	
	360 VA	R	Receptacles: Apparatus Bay	12	20 A	15 16	20 A	12	Lighting: Exterior	EL	52 VA	
	540 VA	R	Receptacles: Apparatus Bay	12	20 A	17 18	20 A	12	Receptacle: Elevator Pit	L; R	244 VA	
	1200 VA	M	Cord Reel: Apparatus Bay	12	20 A	19 20	20 A	12	FACP: Electrical 107	M	500 VA	1
	1200 VA	M	Cord Reel: Apparatus Bay	12	20 A	21 22	20 A	12	Lighting Relay Panel	M	500 VA	
	2400 VA	M	Cord Reel: Apparatus Bay	12	20 A	23 24	20 A	12	Receptacles: Electrical 107	R	540 VA	
	--	--	Spare	--	20 A	25 26	20 A	12	Washer: Utility 112	R	180 VA	
	--	--	Spare	--	20 A	27 28	30 A	10	Dryer: Utility 112	M	2000 VA	
	720 VA	R	Receptacles: Utility 112	12	20 A	29 30						
	1000 VA	R	Treadmill: Exercise 115	12	20 A	31 32	20 A	12	Receptacles: Entry 101	R	720 VA	
	1000 VA	R	Treadmill: Exercise 115	12	20 A	33 34	20 A	12	Computers: Office 110	R	1080 VA	
	1000 VA	R	Treadmill: Exercise 115	12	20 A	35 36	20 A	12	Receptacles: Office 110	R	540 VA	
	1000 VA	R	Stair Climber: Exercise 115	12	20 A	37 38	20 A	12	Printer: Air Lock 113	R	180 VA	
	1000 VA	R	Stair Climber: Exercise 115	12	20 A	39 40	20 A	12	Zetron Power: Air Lock 113	R	180 VA	
	360 VA	M	TV: Exercise 115	12	20 A	41 42	20 A	12	Receptacles: Shop 105	R	360 VA	
	360 VA	M	TV: Exercise 115	12	20 A	43 44	20 A	12	R Room 124, 109	R	540 VA	
	720 VA	R	Receptacles: Exercise 115	12	20 A	45 46	20 A	12	Receptacles: Shop 105	R	360 VA	
	--	--	Spare	--	20 A	47 48	20 A	--	Spare	--	--	
	--	--	Space	--	--	49 50	--	--	Space	--	--	
	--	--	Space	--	--	51 52	--	--	Space	--	--	
	--	--	Space	--	--	53 54	--	--	Space	--	--	

N.E.C. (2017)	Load Type	Conn.	Fct.	Diversity	N.E.C.(2017)	Load Type	Conn.	Fct.	Diversity
220.44	(R)Receptacle	15260 VA	82.77%	12630 VA	210.20(a)	(L)Lighting	1582 VA	125.00%	1978 VA
220.56	(K)Kitchen					(EL)Ext. Ltg.	1468 VA	125.00%	1835 VA
220.60	(C)Cooling			0 VA	620.14	(E)Elevators			
220.60	(H)Heating			0 VA		(WH)Wat. Htr.			
220.60	(F)Fans				220.5	(MT)Lrg. Motor			
	(M)Misc.	8020 VA	100.00%	8020 VA		(SP)Sub Pnl.			

Total Connected Load: 26330 VA VA = 73 A
Total Load (Diversified): 24463 VA VA = 68 A

Location of Panel: YARD STORAGE 109

Panelboard L1B

22000 AIC Rating
X New
Existing

120/208 Wye Volt, 3 Phase, 4 Wire; 1 Section; Type 1 -Nema Rating | Mains Type: MLO | 0 A MCB; 225 A BUS (Copper); ISO. GRND. BUS | X Single, Double, Feed - Thru | Mounting: X Surface, Flush

Note	Load...	Type	Description	Wire	CB	CKT	CB	Wire	Description	Type	Load...	N...
	700 VA	M	Security Gate/Card Reader	12	20 A	1 2	30 A	10	Generator Jacket Heater	H	4000 VA	
	700 VA	M	Security Gate/Card Reader	12	20 A	3 4						
	141 VA	F	Exhaust Fan: EF-1	12	20 A	5 6	20 A	12	Generator Condensation Heater	M	1000 VA	
	696 VA	F	Exhaust Fan: EF-2	12	20 A	7 8	20 A	12	Generator Battery Charger	M	1200 VA	
	141 VA	F	Exhaust Fan: EF-3	12	15 A	9 10	20 A	--	Spare	--	--	
	180 VA	F	Exhaust Fan: EF-4	12	15 A	11 12	20 A	--	Spare	--	--	
	500 VA	M	Folding Bay Door Controller	12	20 A	13 14	20 A	12	Elevator Sump Pump	MT	1176 VA	
	3000 VA	MT	Folding Bay Door	12	15 A	15 16 17 18 19 20	25 A	10	Unit Heater: EUH-1	H	3750 VA	
	3000 VA	MT	Folding Bay Door	12	15 A	21 22 23 24 25 26	20 A	12	Unit Heater: EUH-2	H	3750 VA	
	3000 VA	MT	Folding Bay Door	12	15 A	27 28 29 30 31 32	30 A	10	Fan/Coil: FCU-1	H	7664 VA	
	3000 VA	MT	Folding Bay Door	12	15 A	33 34 35 36 37 38	25 A	10	Fan/Coil: FCU-2	H	3588 VA	
	900 VA	F	Garage Exhaust Fan: GEF-1	12	15 A	39 40 41 42 43 44	30 A	10	Fan/Coil: FCU-3	H	7664 VA	
	900 VA	F	Garage Exhaust Fan: GEF-2	12	15 A	45 46 47 48 49 50	30 A	10	Fan/Coil: FCU-4	H	7664 VA	
	500 VA	M	Exhaust Fan EF-7 Controller	12	20 A	45 46	60 A	6	Washer/Extractor: Utility 112	MT	10800 VA	
	430 VA	MT; M	Circulation Pump CP-1: Utility 112	12	15 A	47 48						
	180 VA	M	Ice Machine: Utility 112	12	20 A	49 50	--	--	Space	--	--	
	--	--	Space	--	--	51 52	--	--	Space	--	--	
	--	--	Space	--	--	53 54	--	--	Space	--	--	

N.E.C. (2017)	Load Type	Conn.	Fct.	Diversity	N.E.C.(2017)	Load Type	Conn.	Fct.	Diversity
220.44	(R)Receptacle				210.20(a)	(L)Lighting			
220.56	(K)Kitchen					(EL)Ext. Ltg.			
220.60	(C)Cooling			0 VA	620.14	(E)Elevators			
220.60	(H)Heating	38080 VA	100.00%	38080 VA		(WH)Wat. Htr.			
220.60	(F)Fans	1158 VA	100.00%	1158 VA	220.5	(MT)Lrg. Motor	12226 VA	122.08%	14926 VA
	(M)Misc.	4960 VA	100.00%	4960 VA		(SP)Sub Pnl.			

Total Connected Load: 56424 VA VA = 157 A
Total Load (Diversified): 59124 VA VA = 164 A

Location of Panel: YARD STORAGE 109

Panelboard L2A

22000 AIC Rating
X New
Existing

120/208 Wye Volt, 3 Phase, 4 Wire; 1 Section; Type 1 -Nema Rating | Mains Type: MLO | 0 A MCB; 225 A BUS (Copper); ISO. GRND. BUS | X Single, Double, Feed - Thru | Mounting: Surface, X Flush

Note	Load...	Type	Description	Wire	CB	CKT	CB	Wire	Description	Type	Load...	N...
	1080 VA	R	Receptacles: Dorms 1 & 2	12	20 A	1 2	20 A	12	Lighting: Corridor/Stairs/Pantry	L	1637 VA	
	1080 VA	R	Receptacles: Dorms 3 & 4	12	20 A	3 4	20 A	12	Lighting: Sleeping Units	L	748 VA	
	1080 VA	R	Receptacles: Dorms 5 & 6	12	20 A	5 6	20 A	12	Lighting: Kitchen/Dining/Day Rm	L	1377 VA	
	540 VA	R	Receptacles: Dorm 7	12	20 A	7 8	20 A	12	Lighting: Apparatus Bay	L	594 VA	
	360 VA	R	Receptacles: RR 207 & 208	12	20 A	9 10	20 A	12	Lighting: Apparatus Bay	L	765 VA	
	360 VA	R	Receptacles: RR 202 & 206	12	20 A	11 12	20 A	12	Lighting: Apparatus Bay	L	765 VA	
	240 VA	R	RR Exhaust Fans	12	20 A	13 14	15 A	12	Circulation Pump CP-1: Utility 213	MT; M	430 VA	
	180 VA	R	Receptacle: Patio 224	12	20 A	15 16	20 A	12	Receptacles: Repelling Area	R	540 VA	
	180 VA	R	Kitchen: Appliance #1	12	20 A	17 18	20 A	12	Receptacles: Utility 213	R	720 VA	
	180 VA	R	Kitchen: Appliance #2	12	20 A	19 20	20 A	12	Receptacle: Utility 213	R	180 VA	
	180 VA	R	Kitchen: Appliance #3	12	20 A	21 22	20 A	12	Washer: Utility 213	R	1200 VA	
	180 VA	R	Kitchen: Appliance #4	12	20 A	23 24	20 A	12	Dryer: Utility 213	M	180 VA	
	360 VA	R	Receptacles: Kitchen 222	12	20 A	25 26						
	500 VA	M	Range Hood	12	20 A	27 28	50 A	8	Electric Range	M	6000 VA	
	540 VA	M	Fire Suppression System	12	20 A	29 30						
	540 VA	R	Receptacles: Day Room 215	12	20 A	31 32	20 A	12	Refrigerator: Pantry 3	R	1200 VA	
	360 VA	M	TV: Day Room 215	12	20 A	33 34	20 A	12	Refrigerator: Pantry 3	R	1200 VA	
	1080 VA	R	Computers: Work Stations 216	12	20 A	35 36	20 A	12	Refrigerator: Pantry 2	R	1200 VA	
	360 VA	R	Receptacles: Work Stations 216	12	20 A	37 38	20 A	12	Refrigerator: Pantry 2	R	1200 VA	
	720 VA	R	Receptacles: Hallways	12	20 A	39 40	20 A	12	Refrigerator: Pantry 1	R	1200 VA	
	540 VA	R	Receptacles: IT 214	12	20 A	41 42	20 A	12	Refrigerator: Pantry 1	R	1200 VA	
	360 VA	R	IT Receptacle: IT 214	12	20 A	43 44	20 A	--	Spare	--	--	
	2000 VA	M	IT Receptacle: IT 214	10	30 A	45 46 47 48	20 A	--	Spare	--	--	
	--	--	Space	--	--	49 50						
	--	--	Space	--	--	51 52	30 A	10	SPD2	SP	0 VA	
	--	--	Space	--	--	53 54						

N.E.C. (2017)	Load Type	Conn.	Fct.	Diversity	N.E.C.(2017)	Load Type	Conn.	Fct.	Diversity
220.44	(R)Receptacle	19440 VA	75.72%	14720 VA	210.20(a)	(L)Lighting	5886 VA	125.00%	7358 VA
220.56	(K)Kitchen					(EL)Ext. Ltg.			
220.60	(C)Cooling			0 VA	620.14	(E)Elevators			
220.60	(H)Heating			0 VA		(WH)Wat. Htr.			
220.60	(F)Fans				220.5	(MT)Lrg. Motor	250 VA	125.00%	313 VA
	(M)Misc.	9760 VA	100.00%	9760 VA		(SP)Sub Pnl.	0 VA	Not Computed	0 VA

Total Connected Load: 35336 VA VA = 98 A
Total Load (Diversified): 32151 VA VA = 89 A

Location of Panel: UTILITY 213

Panelboard L2B

22000 AIC Rating
X New
Existing

120/208 Wye Volt, 3 Phase, 4 Wire; 1 Section; Type 1 -Nema Rating | Mains Type: MLO | 100 A MCB; 100 A BUS (Copper); ISO. GRND. BUS | X Single, Double, Feed - Thru | Mounting: Surface, X Flush

Note	Load...	Type	Description	Wire	CB	CKT	CB	Wire	Description	Type	Load...	N...
	180 VA	C	VRV Branch Selector Box	12	15 A	1 2 3 4	15 A	12	Split System DS/DSCU-1	C	2521 VA	
	720 VA	C	VRF CC Units 1-8	12	20 A	5 6 7 8						
	8214 VA	C	VRF-CU-1	8	40 A	9 10 11 12 13 14	25 A	10	Condensing Unit ACCU-1	C	3840 VA	
	240 VA	F	Exhaust Fan: EF-5	12	20 A	15 16	20 A	12	Condensing Unit ACCU-2	C	3570 VA	
	240 VA	F	Exhaust Fan: EF-6	12	15 A	17 18						
	360 VA	H	Infrared Heater IRH-1	12	20 A	19 20	20 A	12	Condensing Unit ACCU-3	C	3570 VA	
	360 VA	H	Infrared Heater IRH-2	12	20 A	21 22	20 A	--	Spare	--	--	
	360 VA	H	Infrared Heater IRH-3	12	20 A	23 24	20 A	--	Spare	--	--	
	360 VA	H	Infrared Heater IRH-4	12	20 A	25 26						
	800 VA	M	Elevator Cab...	12	20 A	27 28	25 A	10	Condensing Unit ACCU-4	C	3840 VA	
	--	--	Spare	--	20 A	29 30 31 32						
	7664 VA	H	Fan/Coil: FCU-5	10	30 A	33 34 35 36	25 A	10	Condensing Unit ACCU-5	C	3840 VA	
	7664 VA	H	Fan/Coil: FCU-6	10	30 A	37 38 41 42	25 A	10	Condensing Unit ACCU-6	C	3840 VA	
	--	--	Spare	--	20 A	43 44	20 A	--	Spare	--	--	
	--	--	Spare	--	20 A	45 46	20 A	--	Spare	--	--	
	--	--	Spare	--	20 A	47 48	20 A	--	Spare	--	--	
	--	--	Spare	--	20 A	49 50						
	--	--	Spare	--	20 A	51 52	30 A	10	SPD2	SP	0 VA	
	--	--	Spare	--	20 A	53 54						

N.E.C. (2017)	Load Type	Conn.	Fct.	Diversity	N.E.C.(2017)	Load Type	Conn.	Fct.	Diversity
220.44	(R)Receptacle				210.20(a)	(L)Lighting			
220.56	(K)Kitchen					(EL)Ext. Ltg.			
220.60	(C)Cooling	38442 VA	100.00%	38442 VA	620.14	(E)Elevators			
220.60	(H)Heating	16768 VA	100.00%	0 VA		(WH)Wat. Htr.			
220.60	(F)Fans	480 VA	100.00%	480 VA	220.5	(MT)Lrg. Motor			
	(M)Misc.	800 VA	100.00%	800 VA		(SP)Sub Pnl.	0 VA	Not Computed	0 VA

Total Connected Load: 55096 VA VA = 153 A
Total Load (Diversified): 38328 VA VA = 106 A

Location of Panel: UTILITY 213

PANEL SCHEDULE NOTES

1. PROVIDE HANDLE TIE FOR FIRE ALARM CONTROL PANEL.
2. PROVIDE GFI CIRCUIT BREAKER FOR APPLIANCE CIRCUIT.

DBR
9601 McAllister Freeway, Suite 410
San Antonio, Texas 78216
210.546.0200 p
210.546.0201 f
TBPE Firm Registration No. 2234

DBR Project Number 196023.000

JC	BV	CL	WJ	MC

PROFESSIONAL SEAL

NOT FOR CONSTRUCTION OR PERMITTING; PRINTED FOR REVIEW ONLY
01/14/2020
M. JACQUELINE CHANG, P.E.
TEXAS #124987

LOGO/CONTACT

martinez ARCHITECTS

Martinez Architect, LP
900 Rockmead, Suite 250
Houston, Texas 77339
281.346.7371

DESIGN TEAM

Architectural
Martinez Architects

Civil Engineer
Maverick Engineering

Structural
Matrix Structural Engineers

MIE/P/T
DBR

Landscape Architect
KDC Associates

-
Consultant 5 Name

FIRE STATION #5

CITY OF MIDLAND
2210 W GOLF COURSE RD
MIDLAND, TX 79701

PROJECT No: **MA 18017**
DATE: **01/14/2020**

No.	Date	Description

ELECTRICAL SCHEDULES

E502

4.1321

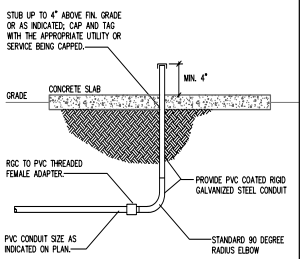

1 CONDUIT STUB UP AND CAP DETAIL
NOT TO SCALE

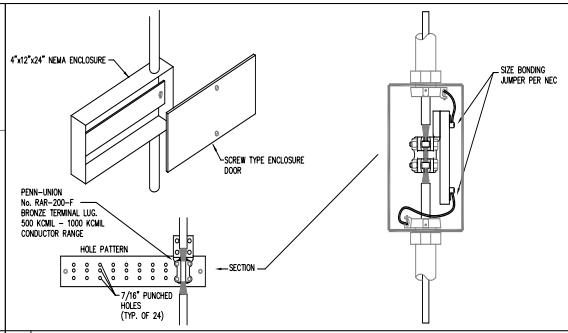

2 TYPICAL GROUNDING BUS DETAIL
NOT TO SCALE

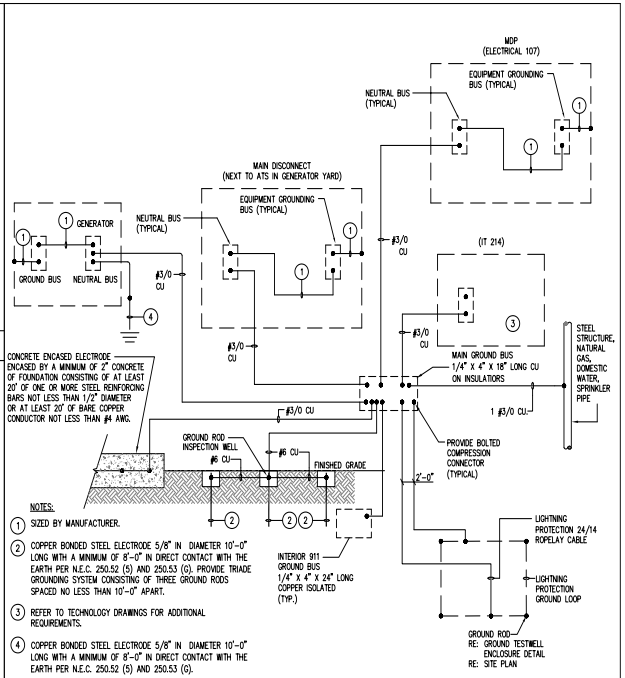

5 GROUNDING ELECTRODE SYSTEM AND BONDING DETAIL WITH RADIO TOWER
NOT TO SCALE

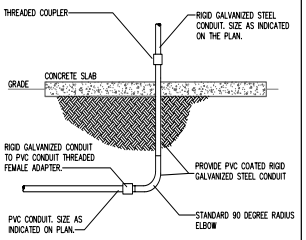

3 CONDUIT STUB UP DETAIL
NOT TO SCALE

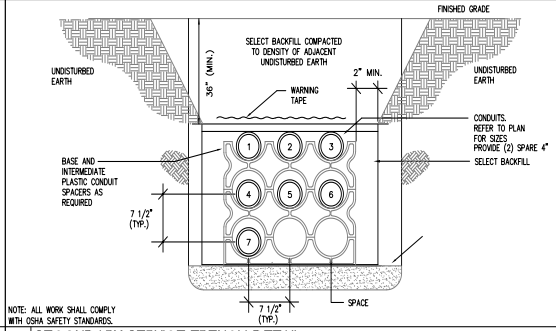

4 SECONDARY SERVICE TRENCH DETAIL
NOT TO SCALE

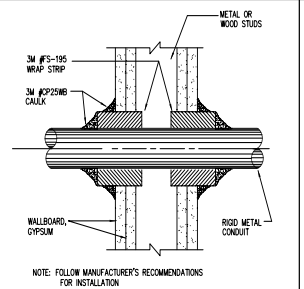

6 1 AND 2 HR. GYPSUM/WALLBOARD PIPE PENETRATION
NOT TO SCALE

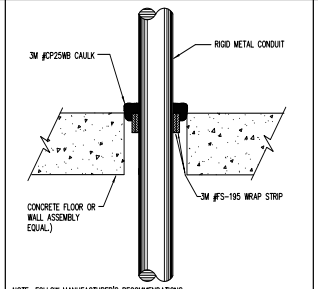

7 2, 3 AND 4 HR. PENETRATIONS FOR CONCRETE FLOOR AND WALL
NOT TO SCALE

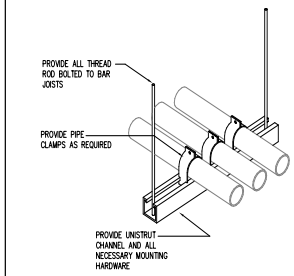

8 UNISTRUT CONDUIT DETAIL
NOT TO SCALE

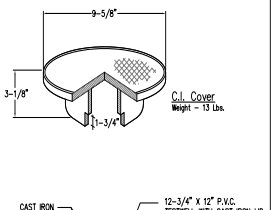

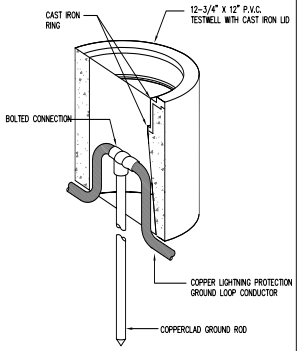

12 GROUND TESTWELL ENCLOSURE
NOT TO SCALE (FOR ALL GROUND RODS)

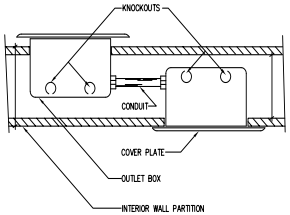

9 BACK-TO-BACK OUTLETS
NOT TO SCALE

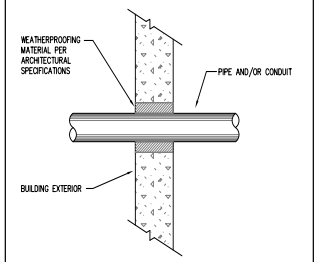

10 PIPE AND/OR CONDUIT PENETRATION
NOT TO SCALE

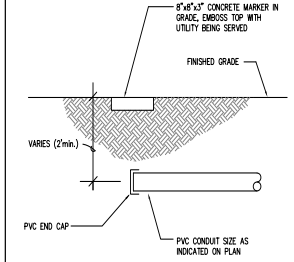

11 CAP AND STAKE DETAIL
NOT TO SCALE

DBR
9601 McAllister Freeway, Suite 410
San Antonio, Texas 78216
210.546.0200 v 210.546.0201 f
TBPE Firm Registration NO. 2234

DBR Project Number 196023.000

JC	BV	CL	WJ	MC

PROFESSIONAL SEAL

NOT FOR CONSTRUCTION OR PERMITTING; PRINTED FOR REVIEW ONLY
01/14/2020
M. JACQUELINE CHANG, P.E.
TEXAS #124697

LOGO/CONTACT

martinez ARCHITECTS

Martinez Architect, LP
900 Rockmead, Suite 250
Houston, Texas 77339
281.346.7371

DESIGN TEAM

Architectural
Martinez Architects

Civil Engineer
Maverick Engineering

Structural
Matrix Structural Engineers

MEP
DBR

Landscaping
KDC Associates

FIRE STATION #5

CITY OF MIDLAND
2200 W GOLF COURSE RD
MIDLAND, TX 79701

PROJECT No: MA 18017
DATE: 01/14/2020

No.	Date	Description

ELECTRICAL DETAILS

E601

4.1322

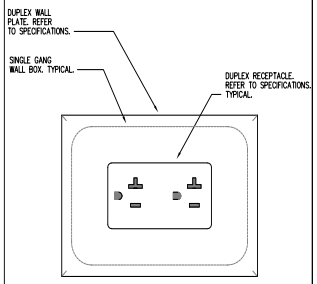

1 HORIZONTAL RECEPTACLE MOUNTING DETAIL
NOT TO SCALE

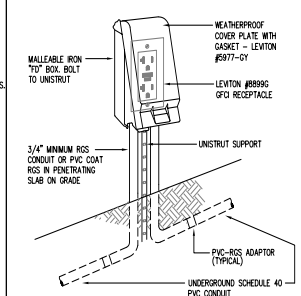

2 RECEPTACLE MOUNTING DETAIL
NOT TO SCALE

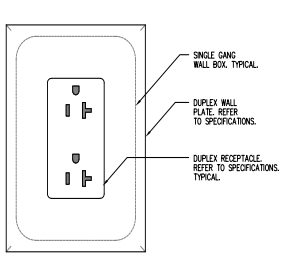

4 TYPICAL RECEPTACLE MOUNTING DETAIL
NOT TO SCALE

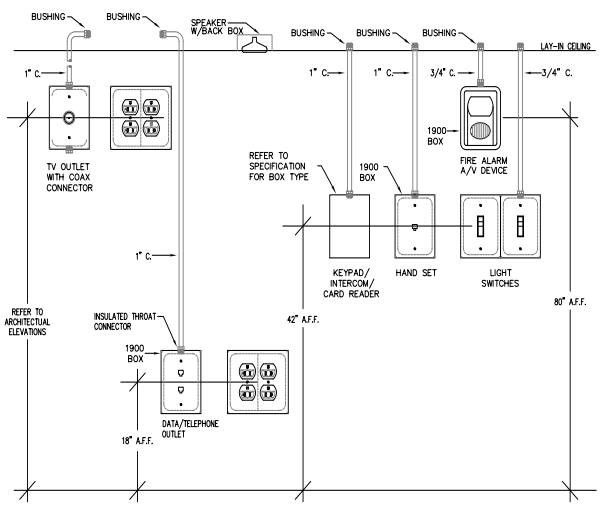

7 TYPICAL DEVICE ELEVATIONS
NOT TO SCALE

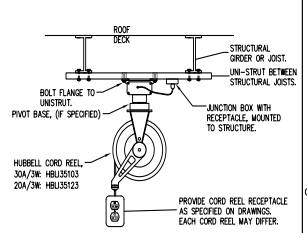

4 CORD REEL MOUNTING DETAIL
NOT TO SCALE
EPR003.DWG

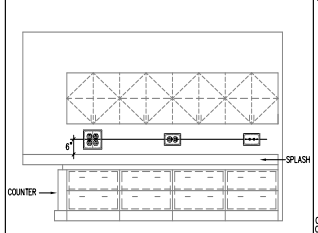

5 TYPICAL COUNTERTOP DEVICE ELEVATION
NOT TO SCALE

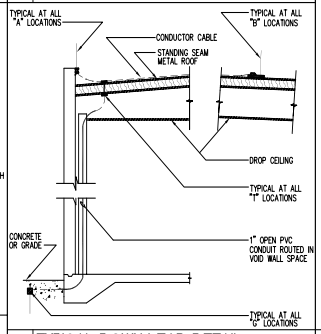

6 TYPICAL DOWN LEAD DETAIL
NOT TO SCALE

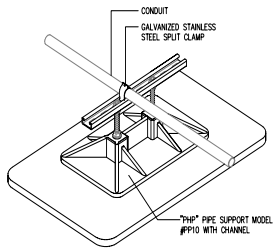

8 CONDUIT SUPPORT DETAIL
NOT TO SCALE

PROFESSIONAL SEAL

NOT FOR CONSTRUCTION OR PERMITTING; PRINTED FOR REVIEW ONLY
01/14/2020
M. JACQUELINE CHANG, P.E.
TEXAS #124997

LOGO/CONTACT

martinez ARCHITECTS

Martinez Architect, LP
900 Rockmead, Suite 250
Houston, Texas 77339
281.346.7371

DESIGN TEAM

Architectural
Martinez Architects

Civil Engineer
Maverick Engineering

Structural
Matrix Structural Engineers

MEP
DBR

Landscaping
KDC Associates

FIRE STATION #5

CITY OF MIDLAND
2200 W GOLF COURSE RD
MIDLAND, TX 79701

PROJECT No: MA 18017
DATE: 01/14/2020

No.	Date	Description

ELECTRICAL DETAILS

E602

DBR
9601 McAllister Freeway, Suite 410
San Antonio, Texas 78216
210.546.0200 v 210.546.0201 f
TBPE Firm Registration NO. 2234

DBR Project Number 196023.000

JC	BV	CL	WJ	MC

4.1323

PLUMBING SYMBOLS AND ABBREVIATIONS

(NOT ALL ITEMS INDICATED APPLY TO THIS PROJECT)

ABBREVIATIONS

A

A	AIR (COMPRESSED)
ABV	ABOVE
AC	ABOVE CEILING
AD	ACCESS DOOR, AREA DRAIN
ADJ	ADJUSTABLE
AFF	ABOVE FINISHED FLOOR
AFG	ABOVE FINISHED GRADE
AHU	AIR HANDLING UNIT
AL	ALUMINUM
AP	ACCESS PANEL
ARCH	ARCHITECT, ARCHITECTURAL
AS	AIR SEPARATOR
ASME	AMERICAN SOCIETY OF MECHANICAL ENGINEERS
ASTM	AMERICAN SOCIETY OF TESTING AND MATERIALS
AV	ACID VENT
AVG	AVERAGE
AW	ACID WASTE
AWS	AMERICAN WELDING SOCIETY
AUX	AUXILIARY

B

B	BOILER
BC	BELOW COUNTER
B/C	BACK OF CURB
BF	BELOW FLOOR
BFV	BUTTERFLY VALVE
BH	BOX HYDRANT
BLDG	BUILDING
BM	BENCHMARK
BOF	BOTTOM OF FOOTING
BOS	BOTTOM OF STRUCTURE
BT	BATH TUB
BTU	BRITISH THERMAL UNIT
BV	BALL VALVE
BWV	BACK WATER VALVE

C

C	CELSIUS
CAB	CABINET
CB	CATCH BASIN
CD	CONDENSATE DRAIN LINE
CFM	CUBIC FEET PER MINUTE
CFS	CUBIC FEET PER SECOND
CH	CHILLER
CP	CIRCULATING PUMP
CI	CAST IRON
CIRC	CIRCULATING
CL	CENTERLINE
CLG	CEILING
CLR	CLEAR
CMU	CONCRETE MASONRY UNIT
CPI	CAST IRON PIPE INSTITUTE
CPVC	CHLORINATED POLYVINYL CHLORIDE
CO	CLEAN OUT
COL	COLUMN
COMB	COMBINATION
COMP	COMPRESSOR
CONC	CONCRETE, CONCENTRIC
CONN	CONNECTION
CONT	CONTINOUS,CONTINUATION
CONTR	CONTROLLER, CONTRACTOR
CRAC	COMPUTER ROOM A/C UNIT
CTR	CENTER
CU	COPPER
CW	COLD WATER

D

D	DEPTH, DRAIN, DRYER
DESIG	DESIGNATION
DTL	DETAIL
DF	DRINKING FOUNTAIN
DIA	DIAMETER
DIM	DIMENSION
DISC	DISCONNECT
DN	DOWN
DS	DOWNSPOUT, DOUBLE SUCTON
DW	DISHWASHER
DWG	DRAWING
DWH	DOMESTIC WATER HEATER
DWP	DOMESTIC WATER PUMP

E

EA	EACH
EC	ELECTRICAL CONTRACTOR
ECC	ECCENTRIC
EDF	ELECTRIC DRINKING FOUNTAIN
EFF	EFFICIENCY
EJ	EXPANSION JOINT
EL	ELEVATION
ELEC	ELECTRICAL
ELEV	ELEVATOR
EMERG	EMERGENCY
ENCL	ENCLOSURE
ENGR	ENGINEER
EQ	EQUAL
EQUIP	EQUIPTMENT
ET	EXPANSION TANK
ETR	EXISTING TO REMAIN
EXT	EXTERNAL
EXTG	EXISTING

F

F	FARENHEIT, FIRE
FBO	FURNISHED BY OTHERS
FCO	FLOOR CLEAN OUT
FCS	FLOOR CONTROL STATON
FD	FLOOR DRAIN, FIRE DAMPER
FDSC	FIRE DEPARTMENT SIAMESE CONNECTION
FDV	FIRE DEPARTMENT VALVE
FH	FIRE HYDRANT
FHC	FIRE HOSE CABINET
FHR	FIRE HOSE RACK
FIXT	FIXTURE
FLEX	FLEXIBLE
FL	FLOW LINES
FLR	FLOOR
FP	FIRE PUMP
FRZR	FREEZER
FS	FLOW SWITCH, FIRE SPRINKLER
FSK	FLOOR SINK
FT	FOOT, FEET
FUT	FUTURE

G

G	GAS
GA	GAUGE
GAL	GALLON
GALV	GALVANIZED
GC	GENERAL CONTRACTOR
GLV	GLOBE VALVE
GND	GROUND
GPD	GALLONS PER DAY
GPH	GALLONS PER HOUR
GPM	GALLONS PER MINUTE
GV	GATE VALVE

H

HB	HOSE BIBB
HD	HEAD, HUB DRAIN
HORIZ	HORIZONTAL
HP	HORSEPOWER
HKP	HOUSEKEEPING PAD
HSC	HORIZONTAL SPLIT CASE
HT	HEIGHT
HTG	HEATING
HTR	HEATER
HW	HOT WATER
HWR	HOT WATER RETURN
HWS	HOT WATER SUPPLY
HZ	HERTZ

I

ID	INSIDE DIAMETER
IE	INVERT ELEVATION
IN	INCH
INSUL	INSULATION
INT	INTERNAL, INTERIOR
IW	INDIRECT WASTE

J

JP	JOCKEY PUMP

K

KEC	KITCHEN EQUIPTMENT CONTRACTOR
KO	KNOCKOUT
KVA	KILOVOLT- AMPS
KW	KILOWATT

L

L	LENGTH, LAVATORY
LAV	LAVATORY
LF	LINEAR FEET
LP	LOW PRESSURE
LRA	LOCKED ROTOR AMPS
LVL	LEVEL
LWCO	LOW WATER CUT OFF

M

MAX	MAXIMUM
MBTUH	THOUSAND OF BTU'S
MC	MECHANICAL CONTRACTOR
MECH	MECHANICAL
MFR	MANUFACTURER
MH	MANHOLE
MI	MALLEABLE IRON
MIN	MINIMUM
MP	MEDIUM PRESSURE
MS	MOP SINK
MTD	MOUNTED
MU	MAKE-UP

N

N.C.	NORMALLY CLOSED
NFPA	NATIONAL FIRE PROTECTION ASSOCIATION
NIC	NOT IN CONTRACT
N.O.	NORMALLY OPEN
NO.	NUMBER
NTS	NOT TO SCALE

O

OC	ON CENTER
OD	OUTSIDE DIAMETER, OVERFLOW DRAIN
OFCU	OUTSIDE AIR FAN COIL UNIT
OPG	OPENING
OS&Y	OPEN STEM AND YOLK
O	MEDICAL OXYGEN

P

P	PUMP, PLUMBING EQUIPTMENT
PC	PLUMBING CONTRACTOR
PD	PRESSURE DROP, PLANTER DRAIN
PH	PHASE, POST HYDRANT
PIV	POST INDICATOR VALVE
PLBG	PLUMBING
PNEU	PNEUMATIC
PNL	PANEL
PNTH	PENTHOUSE
PP	POLYPROPYLENE
PPM	PART PER MILLION
PRI	PRIMARY
PRS	PRESSURE REDUCING STATION
PRV	PRESSURE REDUCING VALVE
PSF	POUNDS PER SQUARE FOOT
PSI	POUNDS PER SQUARE INCH
PSIG	POUNDS PER SQUARE INCH GAUGE
PT	PLUMBING TRIM
PV	PLUG VALVE
PVC	POLYVINYL CHLORIDE

Q

QTY	QUANTITY

R

RCP	REFLECTED CEILING PLAN, REINFORCED CONCRETE PIPE
RD	ROOF DRAIN
RE	REFERENCE,REFER
RECIRC	RECIRCULATE
RED	REDUCER
REFR	REFRIGERATOR
REINF	REINGINFORCING
REQD	REQUIRED
REV	REVISION, REVISE
RM	ROOM
RPM	REVOLUTIONS PER MINUTE
RTU	ROOFTOP UNIT
RV	RELIEF VALVE

S

SCHED	SCHEDULED
SD	STORM DRAIN
SE	SEWAGE EJECTOR
SEC	SECONDARY
SECT	SECTION
SF	SQUARE FEET
SFCS	SPRINKLER FLOOR CONTROL STATION
SH	SHOWER
SHT	SHEET
SIM	SIMILAR
SK	SINK
SP	SUMP PUMP, STATIC PRESSURE
SPEC	SPECIFICATION
SPR	SPRINKLER
SQ	SQUARE
SS	SERVICE SINK
SSD	SUBSURFACE DRAIN
SSFU	SANITARY SEWER FIXTURE UNITS
STD	STANDARD
STL	STEEL
STR	STRAINER
SURF	SURFACE
SUSP	SUSPEND
SV	SANITARY VENT
SW	SOFT WATER

T

TD	TRENCH DRAIN
TDH	TOTAL DYNAMIC HEAD
TH BLK	THRUST BLOCK
TP	TRAP PRIMER
TPD	TRAP PRIMER DEVICE
TYP	TYPICAL

U

U	URINAL
UCD	UNDER CUT DOOR
UG	UNDERGROUND
UH	UNIT HEATER
UL	UNDERWRITERS LABORATORIES, INC.
UNO	UNLESS NOTED OTHERWISE
U/F	UNDERFLOOR
U/S	UNDERSLAB

V

V	VOLT, VENT
VAC	VACUUM(MEDICAL)
VB	VALVE BOX, VACUUM BREAKER
VCP	VITRIFIED CLAY PIPE
VEL	VELOCITY
VERT	VERTICAL
VB	VALVE IN BOX
VOV	VALVE ON VERTICAL
VP	VACUUM PUMP
VTR	VENT THRU ROOF

W

W	WATT, WASTE, WIDTH, WASHER
W/	WITH
W/O	WITHOUT
WC	WATER CLOSET
WCO	WALL CLEANOUT
WH	WALL HYDRANT
WM	WATER METER
WP	WEATHERPROOF
WPD	WATER PRESSURE DROP
WWF	WELDED WIRE FABRIC
WT	WATERTIGHT, WEIGHT

Y

Y	YARD HYDRANT

Z

Z	ZONE

SYMBOLS

PLUMBING SYSTEMS

- SANITARY DRAIN BELOW FLOOR
- SANITARY DRAIN ABOVE FLOOR
- SANITARY VENT
- GREASE WASTE(ABOVE CEILING) — GW
- GREASE WASTE(BELOW FLOOR) — GW
- STORM DRAIN(ABOVE CEILING) — SD
- STORM DRAIN(BELOW FLOOR) — SD
- OVERFLOW DRAIN(ABOVE CEILING) — OD
- OVERFLOW DRAIN(BELOW FLOOR) — OD
- ACID WASTE(ABOVE CEILING) — AW
- ACID WASTE(BELOW FLOOR) — AW
- ACID VENT(ABOVE CEILING OR BELOW FLOOR) — AV
- COLD WATER
- HOT WATER(FINAL DELIVERY TEMPERATURE AS NOTED) — 110°
- HOT WATER RECIRCULATION (TEMPERATURE AS NOTED) — 110°
- NATURAL GAS — G
- TEMPERED WATER(FINAL DELIVERY TEMPERATURE AS NOTED) — T — 110°
- COMPRESSED AIR — CA
- MEDICAL AIR — A
- MEDICAL OXYGEN — O
- MEDICAL VACUUM — V
- FIRE STANDPIPE, FIRE LINE — F
- WET AUTOMATIC FIRE SPRINKLER — FS
- TRAP PRIMER — TP
- DRAIN LINE — D
- SOFT WATER — SW

SYMBOLS

PIPING FITTINGS

- CAP ON END OF PIPE
- ELBOW UP
- ELBOW DOWN
- VALVE IN DROP
- VALVE IN RISE
- DIRECTION OF FLOW
- DIRECTION OF SLOPE DOWN
- CONCENTRIC REDUCER
- ECCENTRIC REDUCER
- TEE OUTLET UP
- TEE OUTLET DOWN
- UNION
- FLANGE
- PIPE ANCHOR
- EXPANSION JOINT
- STRAINER WITH BLOWDOWN VALVE
- GATE VALVE, HVAC BALANCING/STOP VALVE
- GLOBE VALVE
- BALL VALVE
- BALANCING VALVE WITH DIFFERENTIAL PRESSURE TAPS
- OS&Y VALVE
- CHECK VALVE
- BUTTERFLY VALVE
- TWO-WAY MODULATING CONTROL VALVE
- THREE-WAY MODULATING CONTROL VALVE
- SOLENOID VALVE
- PRESSURE REDUCING VALVE
- GAS REGULATOR
- GAS COCK
- SPRINKLER FLOOR CONTROL STATION
- MANUAL AIR VENT
- AUTOMATIC AIR VENT
- T&P RELIEF VALVE
- LINE CLEANOUT/ WALL CLEANOUT
- FLOOR CLEANOUT
- YARD CLEANOUT
- PRESSURE GAUGE WITH GAUGE COCK
- THERMOMETER
- WATER METER
- FLEXIBLE CONNECTION
- PRESSURE AND TEMPERATURE TAP
- FLOW VENTURI
- VACUUM BREAKER
- VACUUM RELIEF VALVE
- BACKFLOW PREVENTOR
- CIRCULATING PUMP
- DRAIN(TYPE AND SIZE AS NOTED ON PLANS)
- ROOF DRAIN OR OVERFLOW DRAIN
- ROOF DRAIN OR OVERFLOW DRAIN(FROM ABOVE)

MISCELLANEOUS

- HOSE BIBB
- WALL HYDRANT
- PLUMBING FIXTURES
- POINT OF NEW CONNECTION TO EXISTING PIPING
- 1 — PLUMBING DRAWING NOTE REFERENCE
- 2 / P2.1 — DETAIL NUMBER OR PLAN / SHEET WHERE DETAIL OR PLAN IS SHOWN
- FS — FLOW SWITCH
- TS — TAMPER SWITCH
- FIRE HOSE CABINET
- FIRE DEPARTMENT SIAMESE CONNECTION(WALL MOUNTED)
- FIRE DEPARTMENT SIAMESE CONNECTION(FREE STANDING)
- 2 / P7.1 — PLUMBING RISER DIAGRAM NUMBER / SHEET WHERE PLUMBING RISER DIAGRAM IS SHOWN

PROFESSIONAL SEAL

NOT FOR CONSTRUCTION OR PERMITTING; PRINTED FOR REVIEW ONLY
01/14/2020
M. JACQUELINE CHANG, P.E.
TEXAS #124697

LOGO/CONTACT

martinez ARCHITECTS

Martinez Architect, LP
900 Rockmead, Suite 250
Houston, Texas 77339
281.346.7371

DESIGN TEAM

Architectural
Martinez Architects

Civil Engineer
Maverick Engineering

Structural
Matrix Structural Engineers

MEP
DBR

Landscaping
KDC Associates

FIRE STATION #5

CITY OF MIDLAND
2200 W GOLF COURSE RD
MIDLAND, TX 79701

PROJECT No: MA 18017
DATE: 01/14/2020

No.	Date	Description

DBR
9601 McAllister Freeway, Suite 410
San Antonio, Texas 78216
210.546.0200 v 210.546.0201 f
TBPE Firm Registration NO. 2234

DBR Project Number 196023.000

JC	BV	CL	WJ	MC

PLUMBING SYMBOLS

P001

4.1324

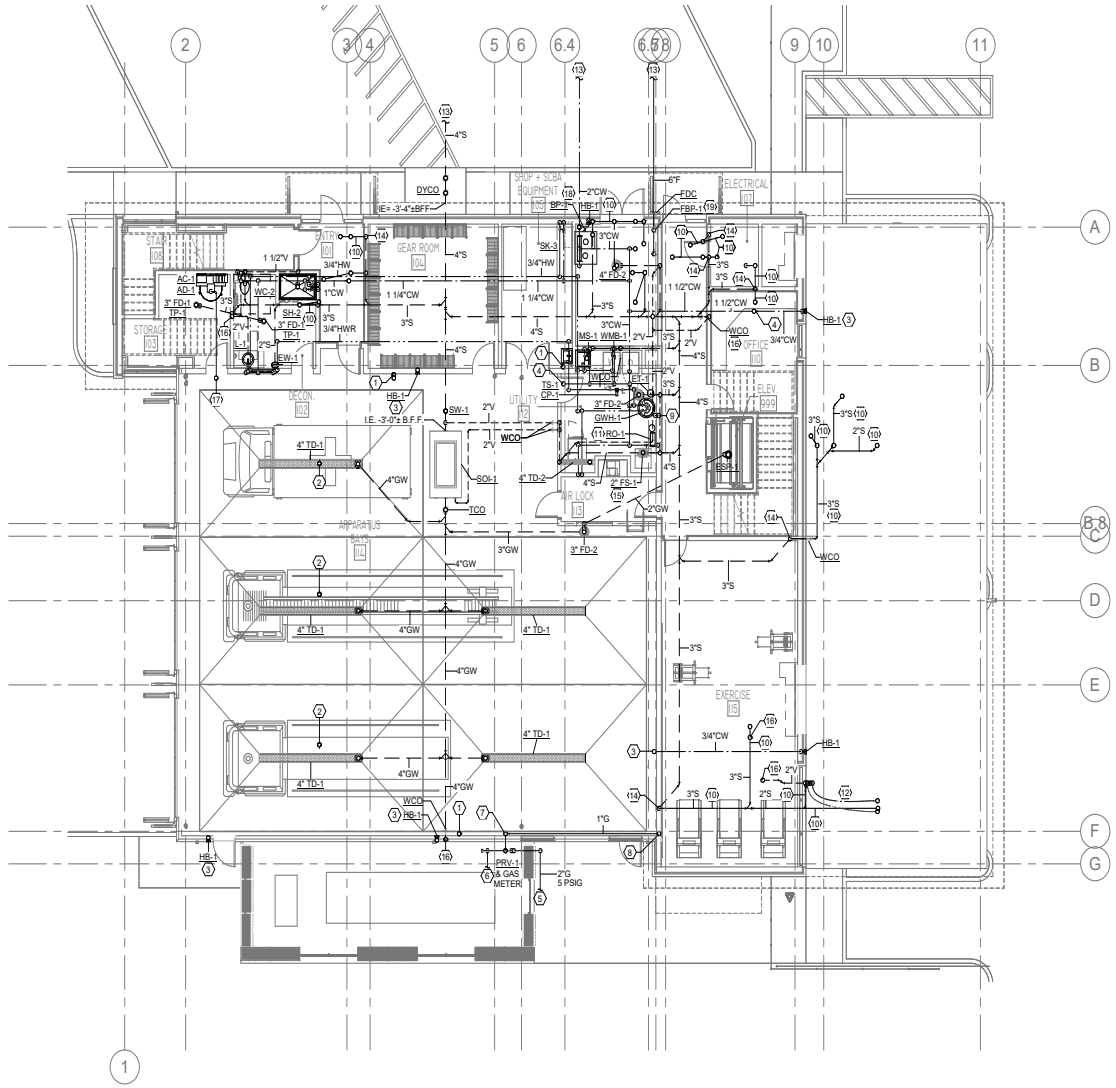

1 P211 **LEVEL 1 PLUMBING PLAN**
1/8" = 1'-0"

GENERAL PLUMBING NOTES

A ALL WORK, METHODS AND INSTALLATIONS INVOLVED IN THE PLUMBING DESIGN SHALL BE IN ACCORDANCE WITH THE PREVAILING BUILDING CODES AND INSPECTION REGULATIONS AND ALL OTHER OFFICIALS HAVING JURISDICTION.

B PRIOR TO CONSTRUCTION, THE CONTRACTOR IS RESPONSIBLE FOR OBTAINING A COPY OF THE OWNER'S MOST RECENT STANDARDS AND REQUIREMENTS FOR CONSTRUCTION. ALL WORK SHALL BE PERFORMED IN ACCORDANCE WITH SUCH REQUIREMENTS, UNLESS THE PREVAILING CODE OR THESE DOCUMENTS INDICATE A HIGHER STANDARD, WHICH SHALL GOVERN.

C COORDINATE ROUTING OF PIPING IN CEILING SPACES WITH MECHANICAL AND ELECTRICAL EQUIPMENT, DUCTWORK AND CONDUIT. NOTIFY THE ARCHITECT/ENGINEER OF ANY CONFLICTS PRIOR TO INSTALLING AN ALTERNATE PIPING PLAN.

D DO NOT ROUGH-IN FOR FIXTURES FROM THESE DRAWINGS. REFER TO LATEST ARCHITECTURAL DRAWINGS FOR DIMENSIONED LOCATIONS.

E ALL PLUMBING FIXTURE AND DEVICE LOCATIONS AND MOUNTING HEIGHTS SHALL BE COORDINATED IN ADVANCE WITH CASEWORK, MILLWORK, ETC.

F COORDINATE FIXTURE AND EQUIPMENT LOCATIONS AND CONNECTION REQUIREMENTS WITH LATEST ARCHITECTURAL DRAWINGS, SPECIFICATIONS, AND MANUFACTURER RECOMMENDATIONS PRIOR TO ANY ROUGH-INS.

G PROVIDE CLEANOUTS, POINT OF USE WATER HEATERS, WATER FILTERS, ETC. IN ACCESSIBLE, BUT NOT IMMEDIATELY VISIBLE LOCATIONS. REFER TO AND COORDINATE WITH ARCHITECTURAL DRAWINGS FOR DIMENSIONS AND DETAILS OF SINK SKIRTS, ADA PANELS, AND MILLWORK.

H ALL PIPING SHALL BE ROUTED CONCEALED FROM PUBLIC VIEW.

J ENSURE THAT PIPING ROUTED IN CEILING SPACE IS AT AN ELEVATION ABOVE THE TOP OF WINDOW FRAME HEADS. ENSURE THAT PIPING ROUTED LOW INSIDE WALLS IS BELOW THE ELEVATION OF WINDOW SILLS. PROVIDE OFFSETS IN PIPING AS REQUIRED.

K ALL VALVES, EQUIPMENT, AND OPERABLE APPURTENANCES SHALL BE LOCATED FREE FROM OBSTRUCTIONS FOR FULL OPERABILITY AND MAINTENANCE ACCESS.

L ALL PIPIING PROVIDED WITHIN RETURN AIR CEILING SPACES SHALL BE PLENUM RATED.

M INSTALLATIONS WHICH DO NOT ADHERE TO THE REQUIREMENTS INDICATED WITHIN THE CONTRACT DOCUMENTS OR WHICH ARE INCORECT DUE TO LACK OF FIELD COORDINATION, ETC., SHALL BE CORRECTED SOLELY AT THE CONTRACTOR'S EXPENSE, WITH NO EXCEPTIONS.

N PROVIDE BALL VALVE SHUT-OFFS ON ALL DOMESTIC WATER BRANCH LINES WITHIN 24" OF THE CORRESPONDING MAIN.

P ALL DOMESTIC WATER AND SANITARY VENT LINES SERVING FIXTURE GROUPS SHALL HAVE A FULL SIZE HEADER THAT RUNS THE LENGTH OF THE CHASE/WALL SPACE FOR CONNECTION TO ALL FIXTURES. REFER TO PLANS FOR HEADER SIZES, WHICH MAY BE INDICATED BY THE VERTICAL DROP DOWN OR RISE UP FROM THE CHASE. REFER TO PLUMBING FIXTURE SCHEDULE FOR INDIVIDUAL FIXTURE ROUGH-IN CONNECTION SIZES TO HEADER.

Q VENT HEADERS WITHIN WALLS AND CHASES FOR MULTIPLE FIXTURES SHALL BE PROVIDED AT NO LESS THAN 6" ABOVE THE FLOOD RIM OF THE HIGHEST FIXTURE.

R FOR EACH FIXTURE INTENDED TO DRAIN INDIRECTLY, PROVIDE THE CODE REQUIRED INDIRECT WASTE PIPE (AND TRAP OR TRAP AND VENT, AS NECESSARY) TO ROUTE THE DRAIN LINE TO THE NEAREST APPROVED INDIRECT WASTE RECEPTOR WITHOUT POSING A TRIP HAZARD. IN FINISHED AREAS ALL SUCH DRAIN LINES SHALL BE CHROME PLATED CAST BRASS.

S FOR FLOOR MOUNTED WATER HEATERS AND SIMILAR EQUIPMENT, PROVIDE A RECTANGULAR SHAPED 4" THICK CONCRETE HOUSEKEEPING PAD EXTENDING TO BEYOND THE LIMITS OF THE EQUIPMENT FOOTPRINT.

T PROVIDE AN ACCESSIBLE WALL CLEANOUT AT THE BASE OF EACH SANITARY RISER.

U NO NATURAL GAS VALVES, UNIONS, OR REGULATORS SHALL BE PERMITTED TO BE INSTALLED ABOVE THE CEILING.

PLUMBING KEYED NOTES

1. 1" FIXED AIR DROP. SECURE VERTICAL PIPE TO WALL. VALVE AND CAP END FOR OWNER INSTALLED EQUIPMENT. VERIFY EXACT LOCATION AND HEIGHT WITH OWNER.
2. 1-1/2" WATER FILL FROM OVER HEAD. VALVE AND CAP DROP FOR OWNER INSTALLED EQUIPMENT. VERIFY EXACT LOCATION AND HEIGHT WITH OWNER.
3. 3/4" COLD WATER DOWN FROM OVER HEAD TO HOSE BIBB.
4. 1-1/2" COLD WATER UP TO SECOND FLOOR.
5. 2", 5PSIG FROM UTILITY CO. TO METER. REFERENCE CIVIL DRAWINGS FOR CONTINUATION.
6. 2", 5PSIG FROM GAS MANIFOLD TO EMERGENCY GENERATOR. COORDINATE ROUTING AND CONNECTION POINT WITH MANUFACTURER.
7. 1-1/2", 11'-14" W.C. GAS ENTRY TO BUILDING. PROVIDE SLEEVE AT ALL PENETRATIONS.
8. 1" GAS UP TO 2ND FLOOR.
9. 3/4" GAS DOWN FROM SECOND FLOOR.
10. SANITARY OVERHEAD.
11. ROUTE FILTERED WATER FROM RO-1 TO ICE MACHINE (FURNISHED BY OWNER).
12. 1/2" HOT AND COLD WATER ROUTED UNDER 2ND FLOOR TO SK-2. RE: P212.
13. REFERENCE CIVIL DRAWINGS FOR CONTINUATION.
14. SANITARY FROM ABOVE AND DOWN.
15. COORDINATE EXACT LOCATION WITH ICE MACHINE PROVIDED BY OWNER.
16. 2" VENT UP.
17. 2" COMPRESSED AIR UP; ROUTE AS HIGH AS POSSIBLE IN APPARATUS BAYS.
18. ROUTE 2" COLD WATER TO DOMESTIC BOOSTER PUMP. RE: 11/P602.
19. ROUTE 6" FIRE WATER TO FIRE PUMP. RE: 12/P602.

DBR
9601 McAllister Freeway, Suite 410
San Antonio, Texas 78216
210.546.0200 p
210.546.0201 f
TBPE Firm Registration No. 2234

TRUE NORTH / PROJECT NORTH

DBR Project Number 196023.000

JC	BV	CL	WJ	MC

PROFESSIONAL SEAL

NOT FOR CONSTRUCTION OR PERMITTING; PRINTED FOR REVIEW ONLY
01/14/2020
M. JACQUELINE CHANG, P.E.
TEXAS #124887

LOGO/CONTACT

martinez ARCHITECTS
Martinez Architect, LP
900 Rockmead, Suite 250
Houston, Texas 77339
281.346.7371

DESIGN TEAM

Architectural
Martinez Architects

Civil Engineer
Maverick Engineering

Structural
Matrix Structural Engineers

MIE/P/T
DBR

Landscape Architect
KDC Associates

-
Consultant 5 Name

FIRE STATION #5
CITY OF MIDLAND
2210 W GOLF COURSE RD
MIDLAND, TX 79701

PROJECT No: **MA 18017**
DATE: **01/14/2020**

No.	Date	Description

LEVEL 1
PLUMBING PLAN

P211

4.1325

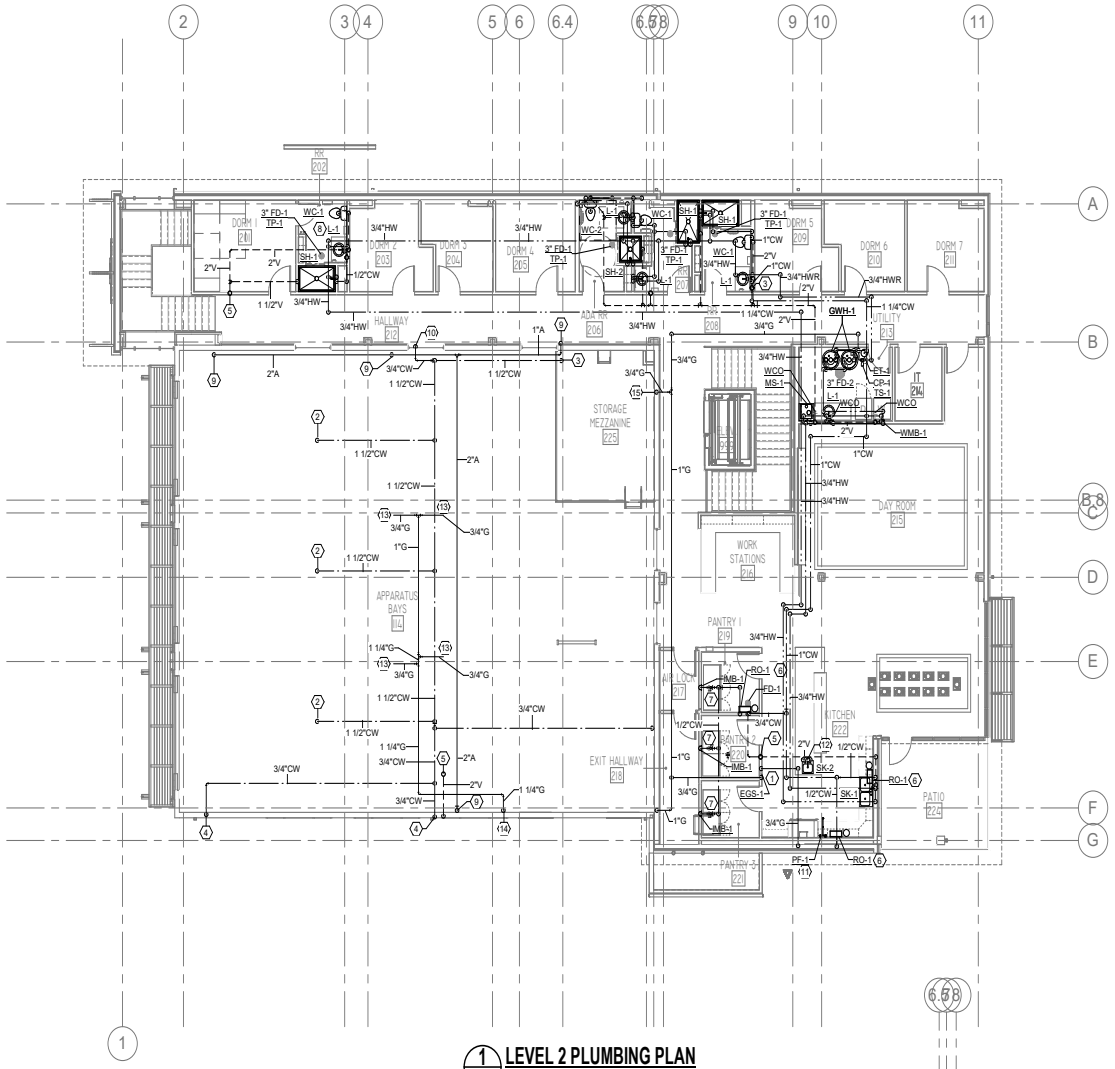

1 LEVEL 2 PLUMBING PLAN
P212 — 1/8" = 1'-0"

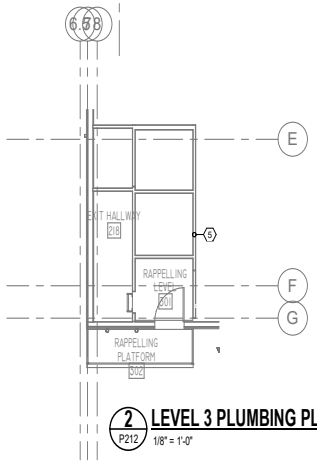

2 LEVEL 3 PLUMBING PLAN
P212 — 1/8" = 1'-0"

GENERAL PLUMBING NOTES

A ALL WORK, METHODS AND INSTALLATIONS INVOLVED IN THE PLUMBING DESIGN SHALL BE IN ACCORDANCE WITH THE PREVAILING BUILDING CODES AND INSPECTION REGULATIONS AND ALL OTHER OFFICIALS HAVING JURISDICTION.

B PRIOR TO CONSTRUCTION, THE CONTRACTOR IS RESPONSIBLE FOR OBTAINING A COPY OF THE OWNER'S MOST RECENT STANDARDS AND REQUIREMENTS FOR CONSTRUCTION. ALL WORK SHALL BE PERFORMED IN ACCORDANCE WITH SUCH REQUIREMENTS, UNLESS THE PREVAILING CODE OR THESE DOCUMENTS INDICATE A HIGHER STANDARD, WHICH SHALL GOVERN.

C COORDINATE ROUTING OF PIPING IN CEILING SPACES WITH MECHANICAL AND ELECTRICAL EQUIPMENT, DUCTWORK AND CONDUIT. NOTIFY THE ARCHITECT/ENGINEER OF ANY CONFLICTS PRIOR TO INSTALLING AN ALTERNATE PIPING PLAN.

D DO NOT ROUGH-IN FOR FIXTURES FROM THESE DRAWINGS. REFER TO LATEST ARCHITECTURAL DRAWINGS FOR DIMENSIONED LOCATIONS.

E ALL PLUMBING FIXTURE AND DEVICE LOCATIONS AND MOUNTING HEIGHTS SHALL BE COORDINATED IN ADVANCE WITH CASEWORK, MILLWORK, ETC.

F COORDINATE FIXTURE AND EQUIPMENT LOCATIONS AND CONNECTION REQUIREMENTS WITH LATEST ARCHITECTURAL DRAWINGS, SPECIFICATIONS, AND MANUFACTURER RECOMMENDATIONS PRIOR TO ANY ROUGH-INS.

G PROVIDE CLEANOUTS, POINT OF USE WATER HEATERS, WATER FILTERS, ETC. IN ACCESSIBLE, BUT NOT IMMEDIATELY VISIBLE LOCATIONS. REFER TO AND COORDINATE WITH ARCHITECTURAL DRAWINGS FOR DIMENSIONS AND DETAILS OF SINK SKIRTS, ADA PANELS, AND MILLWORK.

H ALL PIPING SHALL BE ROUTED CONCEALED FROM PUBLIC VIEW.

J ENSURE THAT PIPING ROUTED IN CEILING SPACE IS AT AN ELEVATION ABOVE THE TOP OF WINDOW FRAME HEADS. ENSURE THAT PIPING ROUTED LOW INSIDE WALLS IS BELOW THE ELEVATION OF WINDOW SILLS. PROVIDE OFFSETS IN PIPING AS REQUIRED.

K ALL VALVES, EQUIPMENT, AND OPERABLE APPURTENANCES SHALL BE LOCATED FREE FROM OBSTRUCTIONS FOR FULL OPERABILITY AND MAINTENANCE ACCESS.

L ALL PIPING PROVIDED WITHIN RETURN AIR CEILING SPACES SHALL BE PLENUM RATED.

M INSTALLATIONS WHICH DO NOT ADHERE TO THE REQUIREMENTS INDICATED WITHIN THE CONTRACT DOCUMENTS OR WHICH ARE INCORECT DUE TO LACK OF FIELD COORDINATION, ETC. SHALL BE CORRECTED SOLELY AT THE CONTRACTOR'S EXPENSE, WITH NO EXCEPTIONS.

N PROVIDE BALL VALVE SHUT-OFFS ON ALL DOMESTIC WATER BRANCH LINES WITHIN 24" OF THE CORRESPONDING MAIN.

P ALL DOMESTIC WATER AND SANITARY VENT LINES SERVING FIXTURE GROUPS SHALL HAVE A FULL SIZE HEADER THAT RUNS THE LENGTH OF THE CHASE/WALL SPACE FOR CONNECTION TO ALL FIXTURES. REFER TO PLANS FOR HEADER SIZES, WHICH MAY BE INDICATED BY THE VERTICAL DROP DOWN OR RISE UP FROM THE CHASE. REFER TO PLUMBING FIXTURE SCHEDULE FOR INDIVIDUAL FIXTURE ROUGH-IN CONNECTION SIZES TO HEADER.

Q VENT HEADERS WITHIN WALLS AND CHASES FOR MULTIPLE FIXTURES SHALL BE PROVIDED AT NO LESS THAN 6" ABOVE THE FLOOD RIM OF THE HIGHEST FIXTURE.

R FOR EACH FIXTURE INTENDED TO DRAIN INDIRECTLY, PROVIDE THE CODE REQUIRED INDIRECT WASTE PIPE (AND TRAP OR TRAP AND VENT, AS NECESSARY) TO ROUTE THE DRAIN LINE TO THE NEAREST APPROVED INDIRECT WASTE RECEPTOR WITHOUT POSING A TRIP HAZARD. IN FINISHED AREAS ALL SUCH DRAIN LINES SHALL BE CHROME PLATED CAST BRASS.

S FOR FLOOR MOUNTED WATER HEATERS AND SIMILAR EQUIPMENT, PROVIDE A RECTANGULAR SHAPED 4" THICK CONCRETE HOUSEKEEPING PAD EXTENDING TO BEYOND THE LIMITS OF THE EQUIPMENT FOOTPRINT.

T PROVIDE AN ACCESSIBLE WALL CLEANOUT AT THE BASE OF EACH SANITARY RISER.

U NO NATURAL GAS VALVES, UNIONS, OR REGULATORS SHALL BE PERMITTED TO BE INSTALLED ABOVE THE CEILING.

PLUMBING KEYED NOTES

1. EMERGENCY GAS SHUT-OFF FOR KITCHEN EQUIPMENT (EGS-1). COORDINATE WITH ELECTRICAL. PROVIDE SOLENOID VALVE, RE: 11/P601.
2. 1-1/2" WATER FILL. VALVE AND CAP DROP FOR OWNER INSTALLED EQUIPMENT.
3. 1-1/2" COLD WATER FROM BELOW.
4. COLD WATER DOWN.
5. 2" VENT UP TO ROOF.
6. RO SYSTEM AND STORAGE TANK (RO-1). ROUTE FILTERED WATER TO FIXTURES (PF-1/SK-1/SK-2).
7. ROUTE FILTERED WATER FROM REVERSE OSMOSIS SYSTEM (RO-1) TO WALL BOXES SERVING PANTRY REFRIGERATORS.
8. PROVIDE Y-BRANCH TAIL PIECE FOR CONDENSATE CONNECTION. COORDINATE WITH MECHANICAL.
9. 1" COMPRESSED AIR DROP. SECURE VERTICAL PIPE TO WALL. VALVE AND CAP DROP FOR OWNER INSTALLED EQUIPMENT. VERIFY EXACT LOCATION AND HEIGHT WITH OWNER.
10. 3/4" COLD WATER DROP IN WALL BELOW WINDOW SILL AND DOWN TO HOSE BIBB.
11. ROUTE FILTERED WATER FROM RO-1 TO POT FILLER FIXTURE.
12. ISLAND WASTE/VENT ROUTED UNDER FLOOR TO WALL. RE: 8/P602.
13. 3/4" GAS TO INFRA-RED RADIANT HEATER. RE: M211.
14. 1-1/4" GAS DOWN IN WALL.
15. 3/4" GAS DOWN TO 1ST FLOOR.

TRUE NORTH / PROJECT NORTH

DBR
9601 McAllister Freeway, Suite 410
San Antonio, Texas 78216
210.546.0200 p
210.546.0201 f
TBPE Firm Registration No. 2234

DBR Project Number 196023.000

JC	BV	CL	WJ	MC

PROFESSIONAL SEAL

NOT FOR CONSTRUCTION OR PERMITTING; PRINTED FOR REVIEW ONLY
01/14/2020
M. JACQUELINE CHANG, P.E.
TEXAS #124987

LOGO/CONTACT

martinez ARCHITECTS
Martinez Architect, LP
900 Rockmead, Suite 250
Houston, Texas 77339
281.346.7371

DESIGN TEAM

Architectural
Martinez Architects

Civil Engineer
Maverick Engineering

Structural
Matrix Structural Engineers

MIE/P/T
DBR

Landscape Architect
KDC Associates

-
Consultant 5 Name

FIRE STATION #5
CITY OF MIDLAND
2210 W GOLF COURSE RD
MIDLAND, TX 79701

PROJECT No: MA 18017
DATE: 01/14/2020

No.	Date	Description

LEVEL 2 & 3 PLUMBING PLAN

P212

4.1326

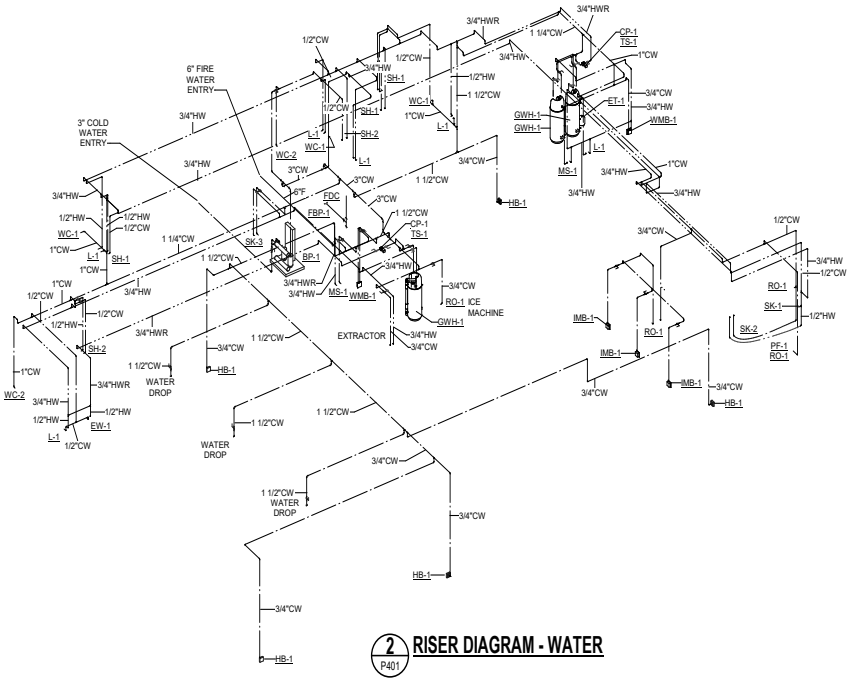

2 P401 **RISER DIAGRAM - WATER**

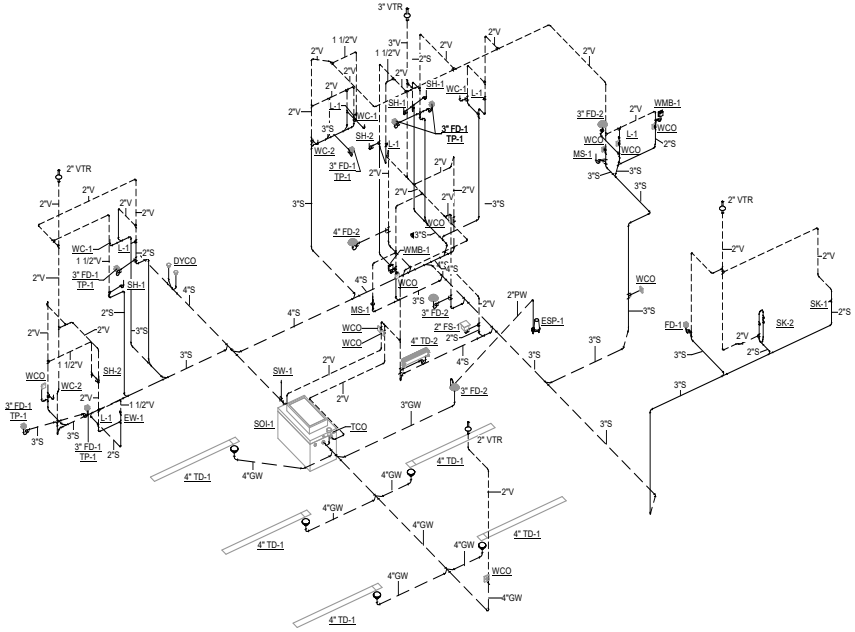

1 P401 **RISER DIAGRAM - SANITARY & VENT**

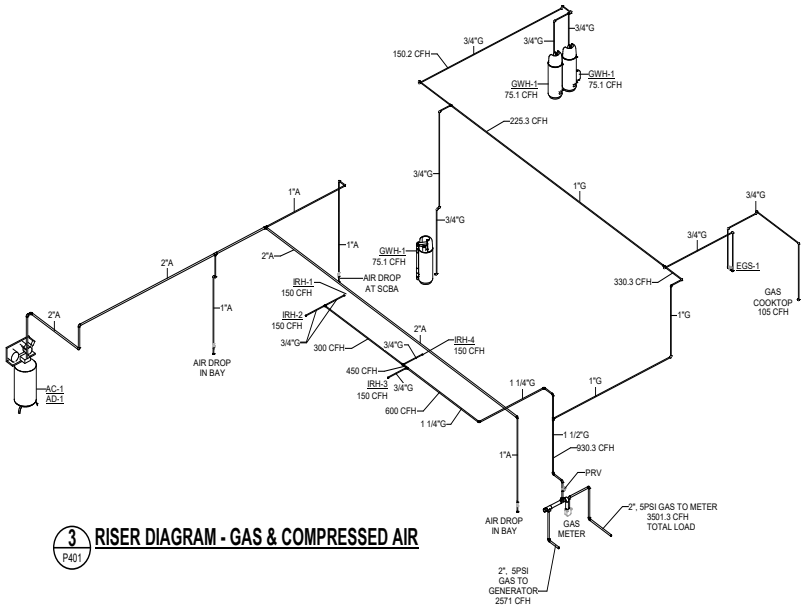

3 P401 **RISER DIAGRAM - GAS & COMPRESSED AIR**

DBR
9601 McAllister Freeway, Suite 410
San Antonio, Texas 78216
210.546.0200 p
210.546.0201 f
TBPE Firm Registration No. 2234

DBR Project Number 196023.000

JC	BV	CL	WJ	MC

PROFESSIONAL SEAL

NOT FOR CONSTRUCTION OR PERMITTING; PRINTED FOR REVIEW ONLY
01/14/2020
M. JACQUELINE CHANG, P.E.
TEXAS #124887

LOGO/CONTACT

martinez ARCHITECTS

Martinez Architect, LP
900 Rockmead, Suite 250
Houston, Texas 77339
281.346.7371

DESIGN TEAM

Architectural
Martinez Architects

Civil Engineer
Maverick Engineering

Structural
Matrix Structural Engineers

MIE/P/T
DBR

Landscape Architect
KDC Associates

-
Consultant 5 Name

FIRE STATION #5

CITY OF MIDLAND
2210 W GOLF COURSE RD
MIDLAND, TX 79701

PROJECT No: **MA 18017**
DATE: **01/14/2020**

No.	Date	Description

PLUMBING RISER DIAGRAMS

P401

4.1327

PLUMBING GENERAL NOTES

1. CONTRACTOR SHALL COMPLY WITH ALL LOCAL, STATE, AND FEDERAL CODES AND AUTHORITIES HAVING JURISDICTION AND SHALL MAKE ALL FINAL CONNECTIONS TO FIXTURES AND EQUIPMENT.
2. DO NOT SCALE PLUMBING DRAWINGS. REFER TO DIMENSIONED ARCHITECTURAL OR EQUIPMENT DRAWINGS FOR EXACT LOCATIONS OF FIXTURES OR EQUIPMENT WITH CONNECTIONS.
3. CONTRACTOR SHALL FIELD VERIFY EXACT LOCATIONS AND ELEVATIONS FOR EXISTING POINTS OF CONNECTION WITH ALL SANITARY, STORM DRAINAGE OR OTHER UTILITY PIPING PRIOR TO THE INSTALLATION OF ANY PIPING. THE CONTRACTOR SHALL BE RESPONSIBLE TO ALERT THE ARCHITECT OF GRADING PROBLEMS PRIOR TO COMMENCING WORK WHEN SUCH PROBLEMS EXIST.
4. ALL PIPE PASSING THROUGH FLOORS OR WALLS WHICH ARE FIRE RATED SHALL BE SUPPORTED AT PENETRATION AND SHALL BE SEALED WITH APPROVED FIRE STOP MATERIALS AS REQUIRED BY BUILDING CODES.
5. CONTRACTOR SHALL COORDINATE WITH STRUCTURAL CONDITIONS AT THE SITE AND PROVIDE PROPER ROUGH-IN CONNECTIONS AS REQUIRED WITHOUT DAMAGE TO STRUCTURE. WHERE MODIFICATIONS TO STRUCTURAL MEMBERS ARE REQUIRED THE CONTRACTOR SHALL RECEIVE WRITTEN APPROVAL FROM THE ARCHITECT AND STRUCTURAL ENGINEER PRIOR TO MODIFICATIONS.
6. CONTRACTOR SHALL BE RESPONSIBLE FOR FIELD COORDINATING ALL PLUMBING PIPING AND SLEEVE LOCATIONS WITH ALL OTHER TRADES PRIOR TO INSTALLATION OF ANY PIPING OR SUPPORTS.

FIRE PROTECTION GENERAL NOTES:

1. FIRE SPRINKLER CONTRACTOR TO FIELD VERIFY SPRINKLER HEAD LOCATIONS.
2. SPRINKLER SYSTEM SHALL BE DESIGNED AND INSTALLED BY A STATE LICENSED FIRE PROTECTION CONTRACTOR IN ACCORDANCE WITH ALL LOCAL, STATE, JURISDICTIONAL, GOVERNMENTAL AGENCIES, MIDLAND COUNTY FIRE CODE, AND NFPA 13 (LATEST ADDITION). SPRINKLER SYSTEM MUST ALSO BE APPROVED BY LANDLORD AND LANDLORD'S FIRE INSURANCE UNDERWRITER.
3. SHOP DRAWINGS AND CALCULATIONS SHALL BE SUBMITTED BY THE CONTRACTOR FOR OWNER. LANDLORD, LANDLORD'S FIRE INSURANCE UNDERWRITER, AND FIRE MARSHALL'S APPROVAL.
4. SPRINKLER SYSTEM SHALL CONTAIN NO VALVES DOWNSTREAM OF CONTROL STATION.
5. CONTRACTOR TO DESIGN SPRINKLER SYSTEM AS REQUIRED TO ACCOMMODATE FIXTURES, PARTITIONS, SOFFITS, FURR DOWNS, CEILING HEIGHTS, ETC.
6. FIRE SPRINKLER SYSTEM SHALL PROVIDE COMPLETE AUTOMATIC PROTECTION AND COVERAGE REQUIRED BY THE LOCAL, STATE, JURISDICTIONAL, GOVERNMENTAL AGENCIES, NFPA 13 (LATEST ADDITION), AND THE MIDLAND COUNTY FIRE CODE. THE WORK SHALL INCLUDE BUT NOT BE LIMITED TO VALVE SUPERVISORY SWITCHES, FLOW SWITCHES AND COORDINATION WITH THE LANDLORDS FIRE ALARM SYSTEM.
7. THE SCOPE OF WORK INCLUDES THE INSTALLATION OF SPRINKLER HEADS INCLUDING PIPE, FITTINGS, HANGERS, AND ACCESSORIES. CONTRACTOR SHALL COORDINATE WITH ARCHITECT THE NEW LOCATIONS OF THE SPRINKLER HEADS PRIOR TO INSTALLATION.
8. THE SPRINKLER SYSTEM SHALL BE FULLY CHARGED AND OPERATIONAL WHEN THE CONTRACTOR IS OFF THE SITE.
9. REFER TO LANDLORD'S CRITERIA FOR ADDITIONAL INFORMATION.
10. SPRINKLER HEADS SHALL BE CONCEALED QUICK RESPONSE WITH WHITE ESCUTCHEONS.

PLUMBING FIXTURES GENERAL NOTES

1. CONTRACTOR TO FIELD VERIFY ELEVATIONS AND DIMENSIONS OF FINISHED FLOORS AND WALLS. TRUE ALL DRAINS, ROUGH-INS AND CARRIERS IN ACCORDANCE WITH WITH PROPOSED ELEVATIONS AND FINISHED SURFACES.
2. MOUNTING HEIGHT ELEVATION OF ALL WALL HUNG OR COUNTER MOUNTED FIXTURES SHALL BE COORDINATED WITH THE ARCHITECT PRIOR TO INSTALLATION OF ROUGH-IN WORK.
3. FOR ALL FIXTURES AND EQUIPMENT WITH ASSOCIATED TRIM OR COMPONENT ACCESSORIES PROVIDED UNDER SEPARATE DIVISIONS AND REQUIRING PLUMBING CONNECTIONS; THIS CONTRACTOR SHALL FIELD COORDINATE EXACT REQUIREMENTS OF, MAKE PROVISIONS FOR, AND SUPPLY ALL MATERIALS AND LABOR FOR MAKING FINAL CONNECTIONS.
4. CONTRACTOR SHALL REFER TO SHOP DRAWINGS OF EQUIPMENT TO BE SUPPLIED FOR FINAL COORDINATION OF ALL ROUGH-IN OPENINGS BEFORE BEGINNING WORK.
5. ALL FIXTURE AND EQUIPMENT STUB-OUTS SHALL BE PROVIDED WITH A STOP VALVE. ALL FIXTURE STOPS SHALL BE SOLID BRASS, LOOSE KEY OPERATED, CHROME PLATED (WHERE EXPOSED), AND FITTED TIGHT TO CHROME PLATED BRASS WALL ESCUTCHEON PLATES.
6. ALL ROUGH IN OPENINGS SHALL BE FITTED WITH CHROME PLATED, HEAVY GAGE BRASS ESCUTCHEON PLATES FITTED TIGHT TO THE PIPE.
7. ALL EXPOSED BRASS SHALL BE CHROME PLATED.
8. PROVIDE DEEP SEAL P-TRAP FOR ALL DRAINS.
9. ALL HANDICAPPED ACCESSIBLE FIXTURES INDICATED WITH ♿ SHALL BE PROVIDED OF APPROVED TYPES AND WITH REQUIRED CONTROLS AND INSTALLED TO HEIGHTS AND CLEARANCES, AS PRESCRIBED BY AMERICAN WITH DISABILITIES ACT (ADA). FIXTURES SHALL COMPLY WITH ALL FEDERAL, STATE, AND LOCAL ADA CODE REQUIREMENTS. REFER TO ARCHITECTURAL DRAWINGS FOR ALL DIMENSIONED ADA MOUNTING HEIGHTS AND SPECIFIED CLEARANCES.

GAS METERING AND PRESSURE REGULATING EQUIPMENT SCHEDULE

EQUIPMENT ITEM	PLAN MARK	GAS QUANTITY C.F.H.	PRESSURE		DISTANCE REGULATOR TO LAST OUTLET	LOCATION	REF. DWG.	SERVICE
			INLET	OUTLET				
GAS METER 1	* * *	3,501.3	5 PSIG	5 PSIG	* * *	SERVICE YARD	MEP01	EMERGENCY GENERATOR AND BUILDING
MAIN REGULATOR 1	PRV-1	930.3	5 PSIG	11"-14" W.C.	130 FT.	SERVICE YARD	MEP01	BUILDING

GENERAL NOTES - GAS PIPING AND REGULATORS

1 GAS REGULATORS SHALL BE EQUIPPED WITH SCREENED VENT OPENINGS ORIENTED TO PREVENT THE ENTRANCE OF WATER OR OTHER FOULING MATERIALS. WHEN LOCATED INSIDE THE BUILDING VENTS SHALL BE PIPED TO THE BUILDING EXTERIOR AND TERMINATED WITH A SCREENED OUTLET 90 ELL FITTING POINTED DOWNWARD. PROVIDE LINE SIZE PLUG OR BALL VALVE AND UNION ON INLET; AND TEE WITH TEST COCK DOWNSTREAM OF ALL REGULATOR ASSEMBLIES.

2 ALL GAS PIPE BELOW GRADE AND BELOW CONCRETE SLAB ABUTTING THE BUILDING BASE SLAB SHALL BE RUN IN A CONTINUOUS SLEEVE. SLEEVES SHALL BE OPEN AT EACH END. BURIED END WITH GOOSENECK A MINIMUM OF 5'-0" BEYOND THE EDGE OF THE CONCRETE SLAB; ABOVE GRADE END, BELOW THE POINT OF ENTRY TO THE BUILDING OR ADJACENT TO REGULATORS OR ISOLATING VALVES.

3 GAS SLEEVES SHALL BE SCHEDULE 40 PVC BELOW GRADE AND WELDED SCHEDULE 40 STEEL ABOVE GRADE.

4 SLEEVES VENTED ABOVE GRADE SHALL BE GOOSENECK ASSEMBLIES WITH SCREENED INLETS AND SHALL BE SECURED IN A VANDAL PROOF MANNER.

WATER HAMMER ARRESTOR SCHEDULE

P.D.I. SYMBOL	FIXTURE UNITS	SIZE
A	1-11	1/2" NPT
B	12-32	3/4" NPT
C	33-60	1" NPT
D	61-113	1 1/4" NPT
E	114-154	1 1/2" NPT
F	155-330	2" NPT

PROVIDE ARRESTORS IN ACCORDANCE WITH THE REQUIREMENTS OF PLUMBING DRAINAGE INSTITUTE (PDI) STANDARD PDI-WH-201. THE USE OF AIR CHAMBERS SHALL NOT BE ACCEPTABLE.

WATER HAMMER ARRESTORS SHALL HAVE LIFETIME WARRANTY AND SHALL BE CERTIFIED BY THE MANUFACTURER AS SUITABLE FOR INSTALLATION WITHOUT A REQUIREMENT FOR ACCESS PANELS. NONETHELESS, ACCESS PANELS SHALL BE PROVIDED IF AND AS REQUIRED BY THE LOCAL AUTHORITY HAVING JURISDICTION (AHJ).

GAS LOAD BREAKDOWN

ITEM	BTU	CFH @ 1000 BTU/CF
WATER HEATERS-3 @ 75,100 Eq.	225,300	225.3
RANGE COOK TOP	105,000	105.0
INFRARED RADIANT HEATER (IRH-1)	150,000	150.0
INFRARED RADIANT HEATER (IRH-2)	150,000	150.0
INFRARED RADIANT HEATER (IRH-3)	150,000	150.0
INFRARED RADIANT HEATER (IRH-4)	150,000	150.0
TOTAL LOW PRESSURE LOAD	930,300	930.3
TOTAL DEVELOPED LENGTH = 150 FT.	SIZING BASED ON TABLE 402.4(3) OF THE IFGC 2015.	
EMERGENCY GENERATOR @ 5PSI FROM MANIFOLD AT METER	2,571,000	2,571.0
TOTAL SITE GAS LOAD	3,501,300	3,501.3

SAND OIL SEPARATOR SCHEDULE

CALCULATIONS

05 TRENCH DRAINS x 8 DFU x 0.25 USAGE FACTOR x 3 GPM/DFU = 30.0 GPM
01 FLOOR DRAINS x 6 DFU x 0.25 USAGE FACTOR x 3 GPM/DFU = 4.5 GPM

TOTAL FLOWRATE = 34.5 GPM

PLAN MARK	MAKE & MODEL NO.	DESCRIPTION
SOS-1	PARK EQUIPMENT COMPANY SOGMP-500-50 WITH GAS TIGHT COVERS	500 US GAL LIQUID CAPACITY; 250 GAL OIL CAPACITY; 9,500 LBS EMPTY WEIGHT; 7'-10" LONG x 4'-4" WIDE x 4'-6" DEEP; INLET FL1= 3'-3"; OUTLET FL2= 3'-0"; 50 GPM FLOW RATE.
SM-1 SAMPLING WELL	PARK EQUIPMENT COMPANY SMB-156 WITH GAS TIGHT COVERS	PRECAST CONCRETE SAMPLING WELL WITH HEAVY DUTY CAST IRON FRAME AND COVER. PIPE SIZE IS 4".

SUMP PUMP SCHEDULE

MARK	SERVICE	GPM	TOTAL HEAD FT	MOTOR HP	ELECTRICAL VOLTS	PHASE	HERTZ	DISCHARGE SIZE	BASIS OF DESIGN
ESP-1	ELEVATOR SUMP PIT	50	15	1/2	115	1	60	2"	STANCOR MODEL SE-50 WITH STANCOR CONTROL PANEL AND ALARM.

PLUMBING FIXTURE SCHEDULE

PLAN MARK	MINIMUM ROUGH-IN SIZES WST&VENT	DRAIN	CW	HW	DESCRIPTION
WATER CLOSET WC-1	4"	2"	4"	1"	---	AMERICAN STANDARD No. 3451 WHITE V.C. ELONGATED SIPHON JET FLOOR MOUNT (1.28 GPF) BOWL WITH TCP SPUD. CENTOCO 503STSCC WHITE OPEN FRONT SEAT AND SLOAN ROYAL FLUSH VALVE #o. 111-1.28. REFER TO ARCHITECTURAL DWGS. FOR MOUNTING HEIGHTS.
WATER CLOSET ♿ WC-2	4"	2"	4"	1"	---	AMERICAN STANDARD No. 3461 WHITE V.C. ELONGATED SIPHON JET FLOOR MOUNT (1.28 GPF) BOWL WITH TCP SPUD. CENTOCO 503STSCC WHITE OPEN FRONT SEAT AND SLOAN ROYAL FLUSH VALVE #o. 111-1.28. REFER TO ARCHITECTURAL DWGS. FOR MOUNTING HEIGHTS. MOUNTING HEIGHT TO COMPLY WITH ADULT ADA REQUIREMENT.
LAVATORY ♿ L-1	2"	1-1/2"	2"	1/2"	1/2"	AMERICAN STANDARD "CADET EVERCLEAN" ROUND, SELF-RIMMING, DROP-IN BASIN No. 0427; WITH AMERICAN STANDARD "MONTERREY" FAUCET No. 7500.170.002, POLISHED CHROME PROVIDE MCGUIRE No. LK-155A FIXED GRID DRAIN STRAINER, McGUIRE CHROME PLATED CAST BRASS P-TRAF TAILPIECE, STOPS AND SUPPLIES. PROVIDE TMV-1, DEARBORN SAFETY SERIES INSULATION KIT WHERE PIPING IS EXPOSED.
SHOWER SH-1	2"	1-1/2"	2"	1/2"	1/2"	BRADLEY MODEL No. WS-1WCA INDIVIDUAL COVERALL WALL SHOWER, COMPLETELY PREASSEMBLED WALL SHOWER UNIT. PROVIDE 2" FD-1 FOR BUILT UP SHOWER BASE.
SHOWER ♿ SH-2	2"	1-1/2"	2"	1/2"	1/2"	BRADLEY MODEL No. WS-1WCA-ADA INDIVIDUAL COVERALL WALL SHOWER - ADA COMPLIANT, COMPLETELY PREASSEMBLED WALL SHOWER UNIT. PROVIDE 2" FD-1 FOR BUILT UP SHOWER BASE.
KITCHEN SINK 2-COMP SK-1	2"	1-1/2"	2"	1/2"	1/2"	ELKAY No. DLR432212; "LUSTERTONE" EQUAL DOUBLE BOWL DROP-IN SINK, 43"x22"x12-1/8", CHICAGO No 1:02-HA8-317ABCP DECK MOUNTED 8" FIXED CENTERS FAUCET WITH 8" SWING HIGH ARCH SPOUT, ." WRISTBLADE HANDLES AND SIDE SPRAY. PROVIDE TMV-1, STOPS, S.S. SUPPLIES, WYE-BRANCH TAILPIECE FOR R0-1 DRAIN, INSINKERATOR BADGER 5 1/2 HP GARBAGE DISPOSAL, AND CHROME PLATED CAST BRASS P-TRAP.
KITCHEN SINK 1-COMP ♿ SK-2	2"	1-1/2"	2"	1/2"	1/2"	ELKAY "LUSTEITONE" CLASSIC STAINLESS STEEL SINK, No. LRAD191865PD, 19"X18"X6-1/2", CHICAGO No 1:02-HA8-317ABCP DECK MOUNTED 8" FIXED CENTERS FAUCET WITH 8" SWING HIGH ARCH SPOUT, ." WRISTBLADE HANDLES AND SIDE SPRAY. PROVIDE TMV-1, STOPS, S.S. SUPPLIES, AND CHROME PLATED CAST BRASS P-TRAP, DEARBORN SAFETY SERIES INSULATION KIT WHERE PIPING IS EXPOSED.
SERVICE SINK SK-3	2"	1-1/2"	2"	1/2"	1/2"	ELKAY STAINLESS STEEL WALL HUNG SERVICE SINK. No. ESS23192, 23"X16-1/2"X12". ELKAY WALL MOUNT FAUCET WITH 8" HOLE SPREAD, GOOSENECK SPOUT, 4" LEVER HANDLES, No LK940GN05T4H PROVIDE STOPS, S.S. SUPPLIES, AND CHROME PLATED CAST BRASS P-TRAP.
HOSE BIBB HB-1	---	---	---	3/4"	---	WATTS HOSE IBB/SILL COCK No. SC8 SERIES; CAST BRASS, WALL MOUNT, TAMPER-PROOF VACUUM BREAKER WITH BREAK-AWAY SCREW, ADJUSTABLE PACKING NUT CARTRIDGE, NO KINK FAUCET WITH TEE HANDLE.
MOP SINK MS-1	3"	2"	3"	3/4"	3/4"	FIAT MODEL N: MSB 2424 MOP SERVICE BASIN. INCLUDE STAINLESS STEEL BUMPER GUARD AND FIAT WALI MOUNTED FAUCET No. 830-AA WITH TOP BRACE, VACUUM BREAKER, PAIL HOOK, AND STERN WILIAMS No. T-35 BRACKET AND HOSE. PROVIDE STAINLESS STEEL SPLASH PANELS.
EMERGENCY EYE WASH ♿ EW-1	---	---	---	1/2"	---	GUARDIAN EYE/FACE WASH No. G1750P-T; ORANGE ABS PLASTIC BOWL; TWO (2) FS-PLUS SPRAY HEADSWITH FLIPTOP DUST COVER AND FILTER; POWDER COATED CAST ALUMINUM FLAG HANDLE ACTIVTION; CHROME PLATED STAY-OPEN BALL VALVE WITH TEFLON SEAL. RE: 3/P602.
REVERSE OSMOSIS RO-1	---	---	---	1/2"	---	CULLIGAN MODEL No. LCRO-100AC REVERSE OSMOSIS PRE-ASSEMBLED WALL MOUNT, 100 GPD SYSTEM TO INCLUDE CPORT 01004765 9 GALLON STORAGE TANK. INSTALL UNDER KITCHEN SINK AND POT FILLER CABINETS, AT ICE MACHINE(S) AND IN PANTRY AS INDICATED ON PLAN. ROUTE FILTERED WATER TO FIXTURES. RE: 13/P601.
POT FILLER PF-1	---	---	---	1/2"	---	CHICAGO MODEL No. 515-ABCP WALL MOUNTED SINGLE HOLE POT & KETTLE FILLER FAUCET.
ICE MAKER BOX IMB-1	---	---	---	1/2"	---	PPP ICE MAKER BOX No. MM-500 MIMB. RE: 12/P601.
WASHING MACHINE BOX WMB-1	2"	2"	2"	3/4"	3/4"	PPP WASHINGMACHINE BOX No. MM-500PLB. RE: 9/P601.
FLOOR SINK FS-1	SEE PLAN	SEE PLAN	SEE PLAN	---	---	WATTS FLOORSINK No. FS-740 SERIES; CAST IRON BODY, NO HUB OUTLET, PORCELAIN ENAMEL COATED CAST RON 3/4 GRATE.
FLOOR DRAIN FD-1	SEE PLAN	SEE PLAN	SEE PLAN	---	---	WATTS FLOORDRAIN No. FD-200 SERIES; EPOXY COATED, CAST IRON BODY, NO HUB OUTLET, SQUARE 6"X6" NICKEL BRONZE STRAINER.
FLOOR DRAIN FD-2	SEE PLAN	SEE PLAN	SEE PLAN	---	---	ZURN No.Z-508-3-G CAST IRON DRAIN WITH 9" DIA. DEEP FLANGE GRATE AND SECONDARY STRAINER. PROVIDE DEEP SEAL P-TRAP
TRAP PRIMER TP-1	---	---	---	1/2"	---	PROVIDE SLOAN No. VBF-72-A2 FLUSH VALVE VACUUM BREAKER TRAP REFILL SUPPLY. AFFIX TO WATER CLOSET NEAREST TO DRAIN SUPPLIED. ALL EXPOSED TUBING TO BE CHROME PLATED AND RUN AS SHORT AS POSSIBLE TO WALL. CONCEALED DRAIN TUBING SHALL BE 1/2" TYPE 'K' SOFT COPPERSLOPING UNIFORMLY TO DRAIN. RE: 4/P602.
TRENCH DRAIN TD-1 (APPARATUS BAYS)	4"	---	---	---	---	J.R. SMITH ZIP TRENCH 12" WIDE 9960 SERIES POLYPROPYLENE TRENCH DRAIN SYSTEM WITH EXTRA HEAVY JUTY, DIN 19580 DUCTILE IRON GRATE.
TRENCH DRAIN (LAUNDRY) TD-2	4"	2"	---	---	---	BLUCHER MODEL No. B674-14674-08 12" WIDE, 8" DEEP, STAINLESS STEEL TRENCH DRAIN WITH TWO LINT SCREENS.
EMERGENCY GAS SHUTOFF EGS-1	---	---	---	---	---	LACS FIRE HALL CONTROL PANEL OR EQUAL. RE: 11/P601.
THERMOSTATIC MIXING VALVE TMV-1	---	---	---	3/4"	3/4"	POWERS LFE-80 SERIES ADJUSTABLE THERMOSTATIC ASSE 1016, POINT OF USE MIXING VALVE WITH INLET CHECK STOPS TO LIMIT HOT WATER TEMPERATURE TO MAXIMUM 105° F. AT FAUCET OUTLET. SUPP.Y CW TO MIXING VALVE FROM CW RISER TO FAUCET. INSTALL ALL AS HIGH AS POSSIBLE TO IROVIDE NEAT AND CLEAN APPEARANCE. RE: 5/P602.
FLOOR CLEANOUT FCO	---	---	---	---	---	J.R. SMITH No. I020 SERIES FINISHED FLOOR CLEANOUT WITH "TWIS-TO-FLOOR" ADJUSTABLE ROUND NICKEL BRONZE TOP.
GRADE CLEANOUT GCO	---	---	---	---	---	J.R. SMITH No. 3Q-4 1388-97 DURO-COATED CAST IRON CLEANOUT WITH WATER TIGHT COUNTER-SUNK PLUG AND SCORIATED CAST IRON TOP WITH FRAME.
TRAFFIC CLEANOUT TCO	---	---	---	---	---	J.R. SMITH No. 3Q-4 1388-97 DURO-COATED CAST IRON CLEANOUT WITH WATER TIGHT COUNTER-SUNK PLUG AND SCORIATED CAST IRON TOP WITH FRAME. PROVIDE TRAFFIC RATED BOX.
DOUBLE YARD CLEANOUT DYCO	---	---	---	---	---	J.R. SMITH No. 3Q-4 1388-97 DURO-COATED CAST IRON CLEANOUT WITH WATER TIGHT COUNTER-SUNK PLUG AND SCORIATED CAST IRON TOP WITH FRAME. INSTALL IN 18"X18" CONCRETE PAD. RE: 9/P602.
WALL CLEAN-OUT WCO	---	---	---	---	---	ZURN ZN-1443-1P WALL CLEANOUT, DURA-COATED CAST IRON BODY, GAS AND WATERTIGHT ABS TAPERED THRIAD PLUG, AND NICKEL BRONZE SECURED SQUARE, SMOOTH WALL ACCESS COVER AND FRAME. RE: 4/P601.

WATER HEATER SCHEDULE

PLAN MARK	MINIMUM ROUGH-IN SIZES WASTE	VENT	DRAIN	CW	HW	DESCRIPTION
GAS WATER HEATER GWH-1	---	---	---	1 1/4"	1 1/4"	A.O. SMITH "PROLINE" No. FCG-100, 98 GALLON STORAGE ASME TANK, 75,100 BTUH INPUT, 81 GPH RECOVERY @ 90° TEMP. RISE, INCLUDES FIXED AUTOMATIC GAS SHUTOFF DEVICE AND PUSH BUTTON SPARK IGNITION.
EXPANSION TANK ET-1	---	---	---	3/4"	---	AMTROL THERM-X-TROL MODEL ST-5-C, ASME THERMAL EXPANSION ABSORBERS, MAXIMUM WORKING PRESSURE 150 PSIG, TOTAL VOLUME 2.1 GALLONS.
CIRCULATION PUMP CP-1	---	---	---	---	3/4"	GRUNDFOS No. UP43-75F ALL BRONZE FLANGED RECIRCULATION PUMP. WIRED FOR 120/60/1 POWER WITH 1/6 HP MOTOR AND FITTED WITH REMOTE HEAT SENSING ADJUSTAT CONTROLLER WITH TS-1 SHUT-OFF TIMER. RE: 6/602.
TIME SWITCH TS-1	---	---	---	---	---	INTERMATIC DIGITAL 24 HOUR TIME SWITCH WITH BATTERY BACK-UP. INSTALL ON WALL ADJACENT TO CIRCULATION PUMP. COORDINATE POWER REQUIREMENTS WITH ELECTRICAL CONTRACTOR. RE: 7 & 8/P601

AIR COMPRESSOR FIXTURE SCHEDULE

PLAN MARK	MINIMUM ROUGH-IN SIZES WASTE	VENT	DRAIN	CW	HW	DESCRIPTION
AIR COMPRESSOR AC-1	---	---	---	---	---	INGERSOLL RAND No. 2475N7.5-P 80 GALLON VERTICAL RECEIVER, TWO STAGE AIR COMPRESSOR, 7.5 HP, 208V, 3Φ AND 24.3 CFM AT 175 PSI MAXIMUM PRESSURE. PROVIDE WITH INGERSOLL RAND MOTOR STARTER KIT. COORDINATE POWER REQUIREMENTS WITH ELECTRICAL CONTRACTOR.
AIR DRYER AD-1	---	---	---	---	---	INGERSOLL RAND No. D72IN AIR DRYER (0.37 KW) CAPABLE OF 42 CFM AT 100 PSI. COORDINATE 120V/1PH POWER WITH ELECTRICAL CONTRACTOR.

FIRE PUMP SYSTEM AND EQUIPMENT

TYPE	DESCRIPTION	MANUFACTURER & MODEL	MINIMUM PERFORMANCE CRITERIA	NOTES
FP-1	FIRE PUMP	PATTERSON 5x3 VIP	ELECTRIC DRIVEN, SINGLE STAGE, VERTICAL INLINE, UL LISTED/FM APPROVED FIRE PUMP. 500 GPM AT 40 PSI RATED HEAD (40 PSI OF BOOST, SEE NOTE 4 BELOW), 20 HP, 3,525 RPM. 208V/3Φ/60Hz. PROVIDE PUMP WITH 125 POUND SUCTION AND DISCHARGE FLANGES.	1,2,3,4,5, 6,7,8,9,10
JP-1	JOCKEY PUMP	GRUNDFOS SERIES CR-1	ELECTRIC DRIVEN, VERTICAL MULTI-STAGE PUMP, ALL HYDRAULIC COMPONENTS OF 304 STAINLESS STEEL CONSTRUCTION, TOTALLY ENCLOSED FAN COOLED (TEFC) MOTOR. 5.0 GPM @ 50 PSI. 0.5 HP, 3450 RPM, 208V/3Φ/60Hz. MINIMUM 1" SUCTION AND DISCHARGE CONNECTIONS, 125 POUND FLANGES.	1
FPC-1	FIRE PUMP CONTROLLER	FIRETROL SERIES FTA-1930	ELECTRIC FIRE PUMP CONTROLLER FOR 20 HP PUMP, DIGITAL SOLID STATE REDUCED VOLTAGE TYPE, SOFT START AND SOFT STOP, MICROPROCESSOR BASED. 100,000 AMP WITHSTAND RATING. COMPLETE WITH NEMA 4 ENCLOSURE, AUTOMATIC TRANSFER SWITCH, AND VOLTAGE SURGE PROTECTOR. FOR 208V/3Φ/60Hz PUMP.	1
JPC-1	JOCKEY PUMP CONTROLLER	FIRETROL SERIES FTA-550F	ELECTRIC JOCKEY PUMP CONTROLLER FOR 0.5 HP PUMP, MICROPROCESSOR BASED, FULL VOLTAGE, ACROSS THE LINE CONTROLLER. COMPLETE WITH NEMA 4 ENCLOSURE. FOR 208V/3Φ/60Hz PUMP.	1

NOTES:

1. CONFIRM MOTOR VOLTAGE AND PHASE REQUIREMENTS WITH ELECTRICAL DRAWINGS. CONTRACTOR TO COORDINATE ALL SUCH REQUIREMENTS PRIOR TO ORDERING EQUIPMENT.
2. PROVIDE FIRE PUMP SYSTEM COMPLETE WITH PUMP, DRIVER, CONTROLLER AND ACCESSORIES.
3. FIRE PUMP SHALL DELIVER NOT LESS THAN 150% OF RATED FLOW AT A PRESSURE NOT LESS THAN 65% OF RATED PRESSURE. THE SHUT OFF PRESSURE SHALL NOT EXCEED 140% OF RATED PRESSURE.
4. EXPECTED SUCTION PRESSURE IS 20 PSIG.
5. PROVIDE 6"x5" ECCENTRIC TAPERED SUCTION REDUCER AND 3"x6" CONCENTRIC TAPERED DISCHARGE INCREASER.
6. PROVIDE 6" FIRE PUMP BYPASS COMPLETE WITH LISTED CHECK VALVE.
7. PROVIDE 4" HOSE VALVE TEST HEADER SUPPLY (UNLESS PIPE LENGTH EXCEEDS 15'-0", VERIFY IN FIELD AND INCREASE PIPE SIZE IN ACCORDANCE WITH NFPA 20).
8. PROVIDE WALL-MOUNTED HOSE VALVE TEST HEADER WITH A MINIMUM OF (2) 2-1/2" HOSE VALVES, NST THREAD, COMPLETE WITH CAPS AND CHAINS.
9. PROVIDE SYSTEM PIPING TO A FIRE DEPARTMENT CONNECTION COMPLETE WITH LISTED CHECK VALVE WITH APPROVED AUTOMATIC DRAIN VALVE, IN ACCORDANCE WITH NFPA AND LOCAL AHJ REQUIREMENTS.

DOMESTIC WATER PRESSURE BOOSTER SYSTEM

PLAN MARK	SERVICE LOCATION	NO. OF PUMPS	GPM/EA PUMP	SYSTEM PRESSURE VALUES TDH [Feet]	SUCTION [PSI]	BOOST [PSI]	SET [PSI]	MOTOR DATA AND VALUES RPM	HP	KW PER YR.	VOLTS	CONTROL PANEL PHASE	FULL LOAD	MAX. SCCR	REMARKS	DESIGN BASIS MODEL
BP-1		2	77	24	38	10.39	48.39	3,450	1.5	3,341.25	208	Three Phase	11.4	100KAIC	1, 2, 3, 4, 5, 6, 7, 8, 9, 10,11	QUANTUMFLO PRODIGY DUPLEX QES_200/1

1. NET BOOST PRESSURE IS CALCULATED BY SYSTEM SET PRESSURE MINUS SUCTION PRESSURE LESS SYSTEM LOSSES OF 5 PSI.
2. SYSTEM SUBMITTALS SHALL INCLUDE CERTIFICATE NUMBER FOR NSF61 CERTIFICATION, UL508A AND QCZJ 3RD PARTY COMPLIANCE.
3. SYSTEM CONTROLS MUST COMPLY WITH AND PROVIDE FOR EITHER CONTROL LOGIC OR REMOTE SENSOR IN ACCORDANCE WITH ANSI/ASHRAE/IES STANDARD 90.1 ENERGY STANDARD.
4. PROVIDE 5-YEAR WARRANTY ON COMPLETE SYSTEM AND INCLUDE WARRANTY CERTIFICATE WITH DETAILS IN SUBMITTALS.
5. SYSTEM SHALL BE PRE-SET TO SYSTEM SITE CONDITIONS BY SIMULATING SUCTION PRESSURE. HYDROSTATIC-ONLY TESTING IS NOT ACCEPTABLE.
6. THE INDUSTRIAL CONTROLLER SHALL BE IN COMPLIANCE WITH CURRENT NEC, SECTION 409.110 HAVING A MAXIMUM 100K AVAILABLE FAULT CURRENT.
7. SCCR RATINGS MUST BE INCLUSIVE OF ALL COMPONENTS WITHIN THE ENCLOSURE WITHOUT THE NEED TO PROVIDE ADDITIONAL UPSTREAM PROTECTION.
8. EQUAL SYSTEMS MUST SHOW MATHEMATICAL ANALYSIS PROVING THAT THE ALTERNATE SUPPLIER MEETS OR EXCEEDS THE KW CAPACITY LISTED.
9. PROVIDE THE FOLLOWING OPTIONS: GENERAL ALARM DRY CONTACT RELAY; MONITORS: SENSOR FAIL, PIPE BREAK AND VFD FAULTS, VIBRATION ISOLATION KIT.
10. REPRESENTATIVE: HEAT AND TREAT. PHONE: (210) 509-7638.
11. BASED ON CALQFLO(R) PROJECT NUMBER: 11187 TITLED: MIDLAND FIRE STATION #5.

PROFESSIONAL SEAL

NOT FOR CONSTRUCTION OR PERMITTING; PRINTED FOR REVIEW ONLY
01/14/2020
M. JACQUELINE CHANG, P.E.
TEXAS #124697

LOGO/CONTACT

martinez ARCHITECTS

Martinez Architect, LP
900 Rockmead, Suite 250
Houston, Texas 77339
281.346.7371

DESIGN TEAM

Architectural
Martinez Architects

Civil Engineer
Maverick Engineering

Structural
Matrix Structural Engineers

MEP
DBR

Landscaping
KDC Associates

FIRE STATION #5

CITY OF MIDLAND
2200 W GOLF COURSE RD
MIDLAND, TX 79701

PROJECT No: MA 18017
DATE: 01/14/2020

No.	Date	Description
1	08/28/2019	FP REVIEW

PLUMBING SCHEDULES

P501

DBR
9601 McAllister Freeway, Suite 410
San Antonio, Texas 78216
210.546.0200 v 210.546.0201 f
TBPE Firm Registration NO. 2234

DBR Project Number 196023.000

JC	BV	CL	WJ	MC

4.1328

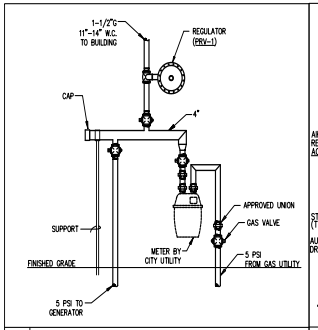

1 MULTI OUTLET GAS MANIFOLD DETAIL
NOT TO SCALE

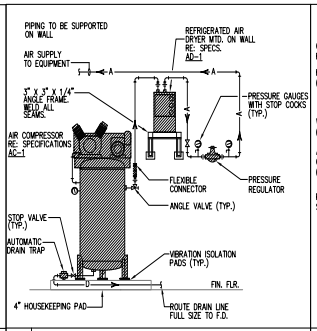

2 AIR COMPRESSOR DETAIL
NOT TO SCALE

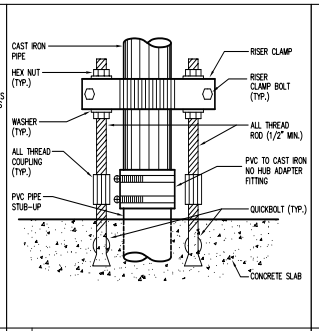

3 PVC TO CAST IRON SUPPORT DETAIL
NOT TO SCALE

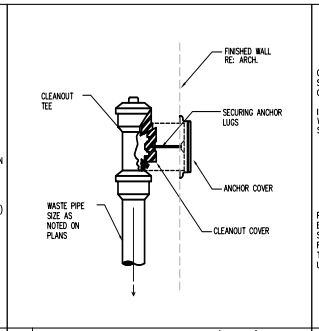

4 WALL CLEANOUT DETAIL (WCO)
NOT TO SCALE

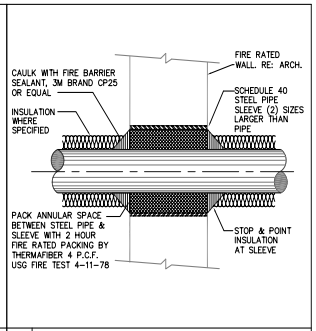

5 PIPE THROUGH FIRE-RATED WALL
NOT TO SCALE

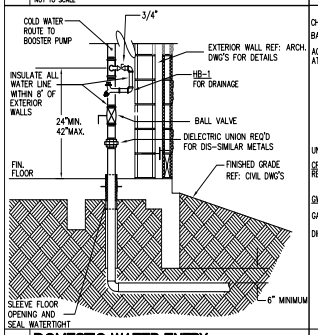

6 DOMESTIC WATER ENTRY
NOT TO SCALE

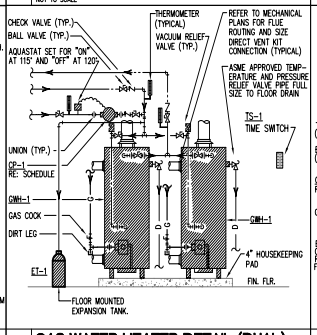

7 GAS WATER HEATER DETAIL (DUAL)
NOT TO SCALE

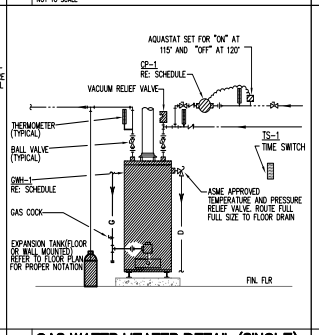

8 GAS WATER HEATER DETAIL (SINGLE)
NOT TO SCALE

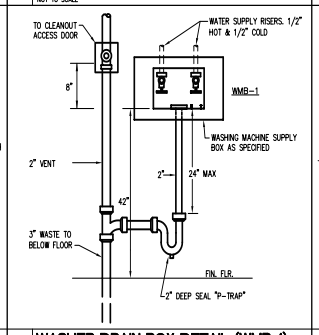

9 WASHER DRAIN BOX DETAIL (WMB-1)
NOT TO SCALE

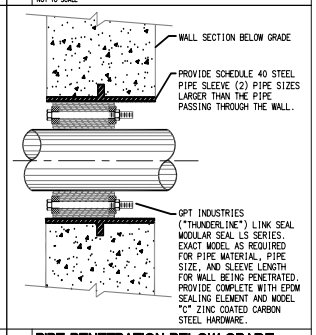

10 PIPE PENETRATION BELOW GRADE
NOT TO SCALE

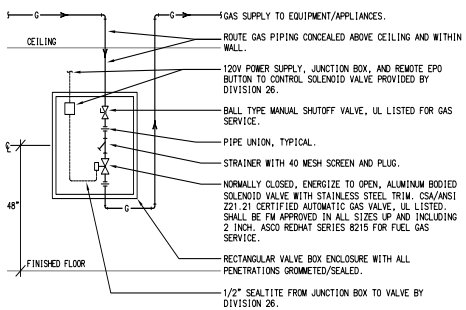

11 EMERGENCY GAS SHUT-OFF DETAIL (EGS-1)
NOT TO SCALE

GENERAL NOTES:

1. REFER TO PLAN DRAWINGS FOR PIPE SIZES.
2. VALVES SHALL BE LINE SIZED.
3. COORDINATE ROUGH-INS AND INSTALLATION IN FIELD AMONGST THE TRADES.
4. PIPING AND APPURTENANCES SHALL BE SECURELY SUPPORTED WITHIN VALVE BOX.
5. DETAIL DEPICTS A "DOWN-FEED" INSTALLATION TO THE CONTROL VALVE. OTHER PIPE ROUTING ARRANGEMENTS SHALL BE SIMILARLY CONFIGURED.
6. VALVE BOX SHALL BE: FULLY RECESSED TYPE UNLESS NOTED OTHERWISE ON DRAWINGS; CONSTRUCTED OF 16 GAUGE SATIN FINISH STAINLESS STEEL OR ENAMELED FINISHED STEEL/PRIME COATED GALVANNEALED STEEL (PROVIDED IN OR PAINTED FINAL COLOR AS SELECTED BY ARCHITECT/OWNER); COMPLETE WITH CONCEALED CONTINUOUS PIANO HINGE AND WITH SCREWDRIVER LATCH OR CYLINDER KEYED LOCK AS SELECTED BY ARCHITECT/OWNER. PROVIDE IN DIMENSIONS AS SUITED FOR PIPE/VALVE SIZES AND TO ENSURE MAINTENANCE ACCESS - TYPICALLY 18"W X 30"H X 6" D, COORDINATE IN FIELD. MANUFACTURED BY LACS, ELMDOR, ACUDOR, OR MIFAB.

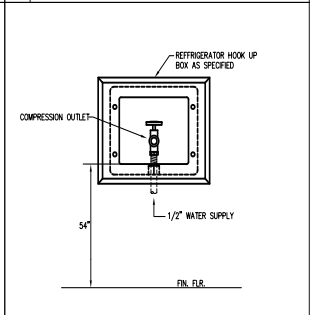

12 WALL BOX DETAIL (IMB-1)
NOT TO SCALE

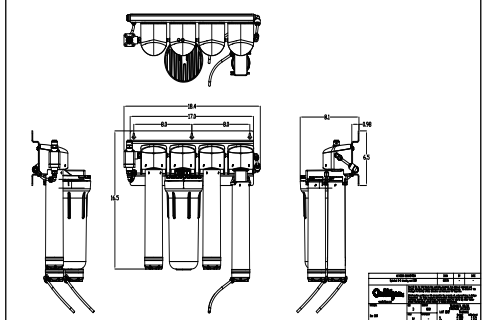

13 REVERSE OSMOSIS DETAIL (RO-1)
NOT TO SCALE

DBR
9601 McAllister Freeway, Suite 410
San Antonio, Texas 78216
210.546.0200 v 210.546.0201 f
TBPE Firm Registration NO. 2234

DBR Project Number 196023.000

JC	BV	CL	WJ	MC

PROFESSIONAL SEAL

NOT FOR CONSTRUCTION OR PERMITTING; PRINTED FOR REVIEW ONLY
01/14/2020
M. JACQUELINE CHANG, P.E.
TEXAS #124697

LOGO/CONTACT

martinez ARCHITECTS

Martinez Architect, LP
900 Rockmead, Suite 250
Houston, Texas 77339
281.346.7371

DESIGN TEAM

Architectural
Martinez Architects

Civil Engineer
Maverick Engineering

Structural
Matrix Structural Engineers

MEP
DBR

Landscaping
KDC Associates

FIRE STATION #5

CITY OF MIDLAND
2200 W GOLF COURSE RD
MIDLAND, TX 79701

PROJECT No: MA 18017
DATE: 01/14/2020

No.	Date	Description

PLUMBING DETAILS

P601

4.1329

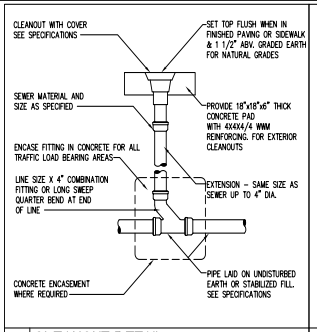

1 CLEANOUT DETAIL
NOT TO SCALE

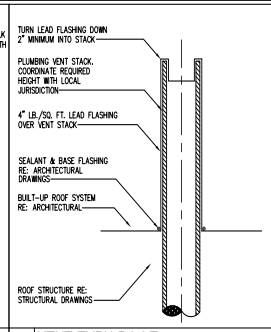

2 VENT THRU ROOF
NOT TO SCALE

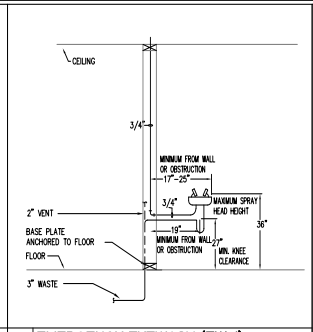

3 EMERGENCY EYEWASH (EW-1)
NOT TO SCALE

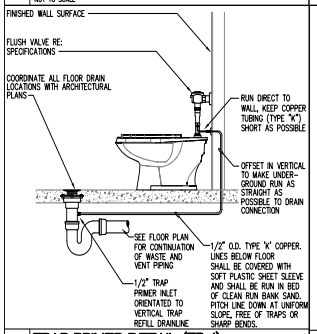

4 TRAP PRIMER DETAIL (TP-1)
NOT TO SCALE

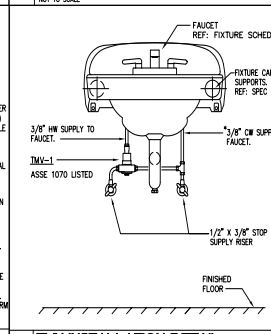

5 TMV INSTALLATION DETAIL
NOT TO SCALE

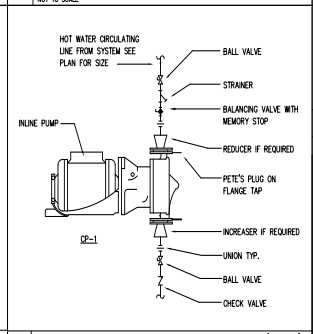

6 IN-LINE CIRCULATING PUMP DETAIL (CP-1)
NOT TO SCALE

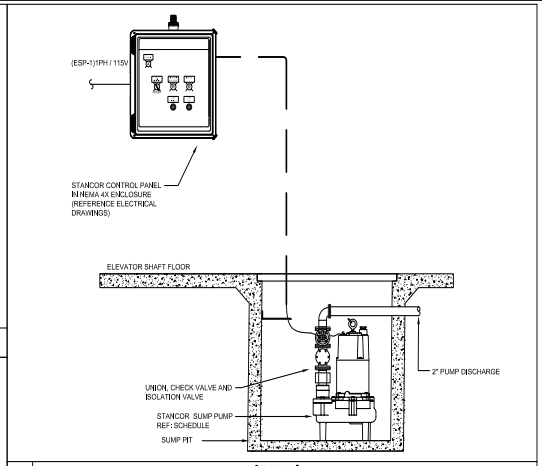

7 ELEVATOR SUMP PUMP DETAIL (ESP-1)
NOT TO SCALE

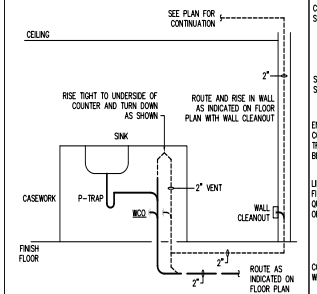

8 ISLAND VENT DETAIL
NOT TO SCALE

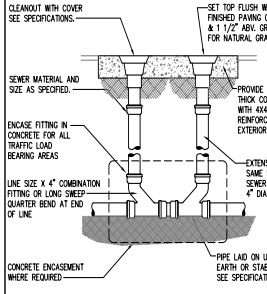

9 DOUBLE YARD CLEAN-OUT (DYCO)
NOT TO SCALE

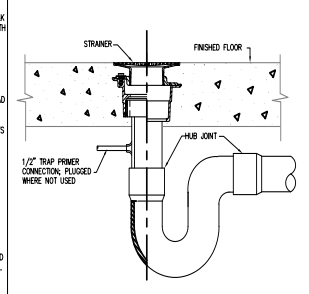

10 FLOOR DRAIN DETAIL
NOT TO SCALE

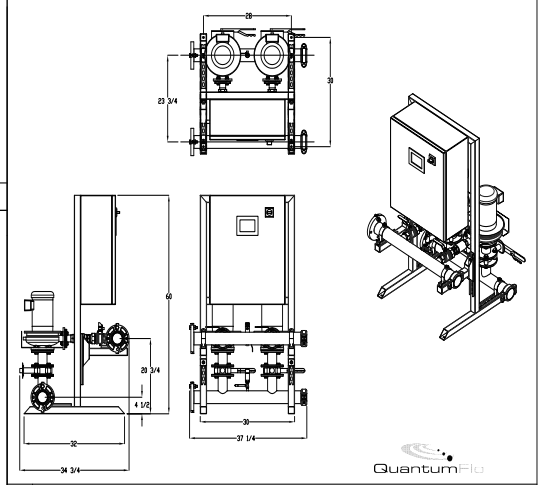

11 BOOSTER PUMP DETAIL
NOT TO SCALE

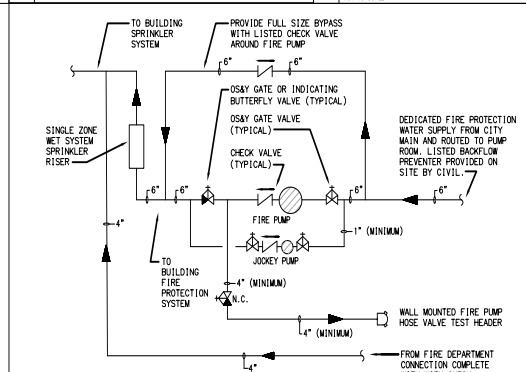

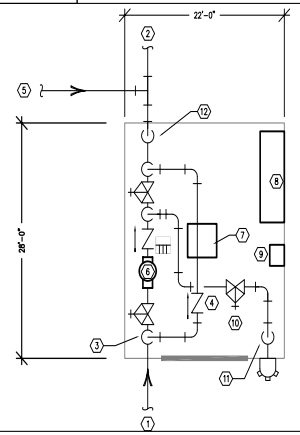

KEYED NOTES:

1. 6" FIRE PROTECTION WATER SERVICE ENTRY. BFP LOCATED OUTDOORS ON SITE.
2. FIRE SPRINKLER MAIN TO SERVE BUILDING FIRE SPRINKLER SYSTEM.
3. TEE OFF WITH FULL SIZE BYPASS LINE.
4. LISTED CHECK VALVE.
5. 4" LINE FROM FIRE DEPARTMENT CONNECTION. ALTERNATIVELY, FOR A SINGLE ZONE WET SYSTEM AS SHOWN, THE LINE CAN CONNECT ANYWHERE ON THE SYSTEM SIDE OF THE SYSTEM CONTROL, CHECK AND ALARM VALVES TO A LINE OF SUFFICIENT SIZE, PROVIDED IT IS NOT A BRANCH LINE.
6. 500 GALLON PER MINUTE VERTICAL INLINE FIRE PUMP.
7. 5 GALLON PER MINUTE JOCKEY PUMP.
8. FIRE PUMP CONTROLLER WITH AUTOMATIC TRANSFER SWITCH.
9. JOCKEY PUMP CONTROLLER.
10. NORMALLY CLOSED VALVE AND FIRE PUMP HOSE HEADER SUPPLY.
11. DROP DOWN AND ROUTE THROUGH WALL AND PROVIDE WALL MOUNTED FIRE PUMP HOSE VALVE TEST HEADER COMPLETE WITH A MINIMUM (2) 2-1/2" HOSE VALVES.
12. SPACE FOR FIRE SPRINKLER RISER WITH VALVES AND TRIM.

12 FIRE PROTECTION SYSTEM SCHEMATIC (FBP-1)
NOT TO SCALE

PROFESSIONAL SEAL

NOT FOR CONSTRUCTION OR PERMITTING; PRINTED FOR REVIEW ONLY
01/14/2020
AL JACQUELINE CHANG, P.E.
TEXAS #124697

LOGO/CONTACT

martinez ARCHITECTS

Martinez Architect, LP
900 Rockmead, Suite 250
Houston, Texas 77339
281.346.7371

DESIGN TEAM

Architectural
Martinez Architects

Civil Engineer
Maverick Engineering

Structural
Matrix Structural Engineers

MEP
DBR

Landscaping
KDC Associates

FIRE STATION #5

CITY OF MIDLAND
2200 W GOLF COURSE RD
MIDLAND, TX 79701

PROJECT No: MA 18017
DATE: 01/14/2020

No.	Date	Description

PLUMBING DETAILS

P602

DBR
9601 McAllister Freeway, Suite 410
San Antonio, Texas 78216
210.546.0200 v 210.546.0201 f
TBPE Firm Registration NO. 2234

DBR Project Number 196023.000

JC	BV	CL	WJ	MC

4.1330

TECHNOLOGY GENERAL NOTES

1. CONTRACTOR SHALL COORDINATING WITH DBR ENGINEERING PRIOR TO THE INSTALLATION OF RACKS AND RACK EQUIPMENT. NO RACKS SHALL BE PERMANENTLY INSTALLED WITHOUT WRITTEN APPROVAL OF THE PROPOSED LOCATIONS.
2. THE SELECTED, INSTALLING CONTRACTOR MUST BE A CERTIFIED INTEGRATOR/INSTALLER AUTHORIZED BY THE SPECIFIED SYSTEM MANUFACTURER TO INSTALL THE CABLE PLANT AND CONNECTIVITY PRODUCTS. REFER TO SPECIFICATIONS FOR PRODUCT TYPE AND DESCRIPTION.
3. SYSTEM WIRING AND EQUIPMENT INSTALLATION SHALL BE IN ACCORDANCE WITH GOOD ENGINEERING PRACTICES AS ESTABLISHED BY ANSI/EIA/TIA, BICSI, AND THE NEC.
4. ALL WIRING SHALL MEET ALL STATE AND LOCAL ELECTRICAL CODES.
5. ALL TELECOMMUNICATIONS SYSTEMS EQUIPMENT AND MOUNTING LOCATIONS SHALL BE IN COMPLIANCE WITH ADA ACCESSIBILITY STANDARDS.
6. ALL INDUSTRY STANDARD CATEGORY 6 CABLING PRACTICES MUST BE FOLLOWED FOR ALL DATA CABLING.
7. ALL DATA CABLES ARE TO BE INSTALLED WITH A MINIMUM OF 12 INCHES OF SEPARATION FROM AC POWER CABLES, INTERCOM, FIRE ALARM, SECURITY CABLES IN ANY PARALLEL OPEN WIRE RUN.
8. ALWAYS CROSS OTHER SYSTEM CABLES AT A 90 DEGREE ANGLE.
9. ALL CABLES AND TERMINATION COMPONENTS SHALL BE MACHINE LABELED AT BOTH ENDS. LABEL ALL CABLES PER TS DRAWINGS AND/OR SPECIFICATIONS. FINAL CABLE/OUTLET IDENTIFICATION LABELS SHALL BE COORDINATED WITH THE OWNER AND DBR.
10. CONTRACTOR TO PROVIDE LIGHTNING PROTECTION ON ALL COMMUNICATION CABLE BETWEEN BUILDINGS.
11. ALL EXPOSED CABLING ROUTED IN PLENUM SHALL BE PLENUM-RATED. ALL NON PLENUM-RATED CABLING INSTALLED IN PLENUM SPACES SHALL BE INSTALLED IN CONDUIT.
12. NO TERMINATION OR SPLICES SHALL BE INSTALLED IN OR ABOVE CEILINGS UNLESS NOTED NOTED OTHERWISE.
13. CONTRACTOR SHALL MAINTAIN WALL RATING WITH PROPER FIRE BLOCKING METHODS.
14. ALL CABLE INSTALLED SHALL ROUTE TO THE CENTER OF THE ROOM IN WHICH IT SERVES AND THEN TO THE OUTLET LOCATION IT IS INTENDED FOR. EACH CABLE SHALL HAVE A 10' SERVICE LOOP AT THE CENTER OF EACH ROOM AND A 3' SERVICE LOOP ABOVE EACH OUTLET LOCATION.
15. THE SYSTEM INSTALLER SHALL PROPERLY SUPPORT ALL INSTALLED SYSTEM CABLING FROM A PANDUIT J-MOD CABLE SUPPORT SYSTEMS AS DETAILED IN SPECIFICATIONS. NO CABLING SHALL BE ROUTED AND TIED DIRECTLY TO BUILDING STEEL, CEILING GRID SUPPORT, CONDUIT, PIPING, OR DUCTWORK. PANDUIT J-MOD SUPPORT SYSTEM SHALL BE DIRECTLY CONNECTED TO THE BUILDING'S STEEL JOIST. IN LOCATION WHERE THE BOTTOM OF THE JOIST IS MORE THAN 5' ABOVE THE CEILING, THE SYSTEM INSTALLER SHALL PROVIDE AND INSTALL THREADED ROD AND ALL REQUIRED MATERIALS TO CONNECT THE THREADED ROD TO THE BUILDING STEEL AND THE CABLE SUPPORT SYSTEM TO THE THREADED ROD. CABLE PATHWAY SHALL NOT BE HIGHER THAN 5' ABOVE THE CEILING AT ANY LOCATIONS.
16. STRUCTURED CABLING SYSTEM CONTRACTOR SHALL PROVIDE ONE (1) CATEGORY 6 CABLE TO EACH VIDEO SURVEILLANCE CAMERA ON THE ENTIRE PROJECT. PROVIDE AN ABOVE CEILING BOX AT EACH AND TERMINATE THE CIRCUIT WITH AN RJ45 INSERT. PROVIDE ONE (1) 20' PLENUM PATCH CABLE AT THE DEVICE END OF EACH LOCATION.
17. STRUCTURED CABLING SYSTEM CONTRACTOR SHALL PROVIDE ONE (1) CATEGORY 6 CABLE TO EACH ACCESS CONTROLLED DOOR ON THE ENTIRE PROJECT. PROVIDE AN ABOVE CEILING BOX AT EACH AND TERMINATE THE CIRCUIT WITH AN RJ45 INSERT. PROVIDE ONE (1) 20' PLENUM PATCH CABLE AT THE DEVICE END OF EACH LOCATION.
18. CONTRACTOR TO PROVIDE AND INSTALL ALL REQUIRED CABLING AND COMPONENTS TO FURNISH TWO (2) ANALOG TELEPHONE CABLES TO THE FIRE ALARM SYSTEM. CONTRACTOR TO COORDINATE WITH THE SYSTEM INSTALLER FOR EXACT LOCATIONS AND TERMINATION INSTRUCTIONS PRIOR TO INSTALLATION.
19. CONTRACTOR TO PROVIDE AND INSTALL ALL REQUIRED CABLING AND COMPONENTS TO FURNISH ONE (1) ANALOG TELEPHONE CABLES TO EACH ELEVATOR MACHINE ROOM ON THE PROJECT. CONTRACTOR TO COORDINATE WITH SYSTEM INSTALLERS FOR EXACT LOCATIONS AND TERMINATION INSTRUCTIONS PRIOR TO INSTALLATION.
20. CONTRACTOR TO PROVIDE AND INSTALL ALL REQUIRED CABLING AND COMPONENTS TO FURNISH TWO (2) CATEGORY 6 CABLES TO BUILDING AUTOMATION SYSTEM. (1) CABLE SHALL BE INSTALLED AT +18" AFF FOR TECHNICIAN NETWORK CONNECTIVITY AND THE OTHER SHALL PROVIDE CONNECTIVITY TO THE SYSTEM. CONTRACTOR TO COORDINATE WITH SYSTEM INSTALLERS FOR EXACT LOCATIONS AND TERMINATION INSTRUCTIONS PRIOR TO INSTALLATION.
21. CONTRACTOR TO PROVIDE AND INSTALL (1) CATEGORY 6 CABLE TO THE BUILDING'S ACCESS CONTROL HEAD END PANEL. TERMINATION OF THIS CABLE SHALL BE COORDINATED WITH THE SYSTEM INSTALLER.
22. CONTRACTOR TO PROVIDE AND INSTALL (1) CATEGORY 6 CABLE TO THE BUILDING'S INTRUSION DETECTION CONTROL PANEL. TERMINATION OF THIS CABLE SHALL BE COORDINATED WITH THE SYSTEM INSTALLER.

TECHNOLOGY LEGEND

GROUP	SYMBOL	DESCRIPTION
DEVICES	▽	INDICATES THE LOCATION OF A NEW TECHNOLOGY OUTLET. CONTRACTOR TO PROVIDE FACEPLATE WITH A MINIMUM OF 4-PORTS AT EACH LOCATION UNLESS OTHERWISE NOTED. ELECTRICAL CONTRACTOR TO PROVIDE A DOUBLE GANG BACK BOX WITH A SINGLE GANG REDUCER RING AND A 1" EMT CONDUIT FROM THE BOX TO THE NEAREST ACCESSIBLE CEILING. SOME EXISTING BUILDINGS MAY REQUIRE SURFACE MOUNTED RACEWAY. ELECTRICAL CONTRACTOR TO PROVIDE AND INSTALL RACEWAY AS SPECIFIED AND DESIGNATE IN THE ELECTRICAL CONTRACT DOCUMENTS. SYSTEM INSTALLER TO PROVIDE AND INSTALL A PLASTIC PROTECTIVE BUSHING, ON EACH CONDUIT STUB-OUT, TO PREVENT CABLE DAMAGE.
	ⓥ	INDICATES THE LOCATION OF A FLOOR MOUNTED TECHNOLOGY OUTLET. ELECTRICAL CONTRACTOR TO PROVIDE AND INSTALL A FLOOR BOX WITH (1) 1" CONDUIT PER EVERY (6) CABLES INSTALLED. ALL CONDUITS SHALL ROUT FROM THE FLOOR BOX, DIRECTLY TO THE IDF SERVING THIS AREA AND STUB-UP IN THE SAME LOCATION AS THE BUILDING SERVICE CONDUITS.
	⌖	INDICATES THE LOCATION OF A CEILING MOUNTED OUTLET. CONTRACTOR SHALL MOUNT THIS OUTLET AT +12" ABOVE THE CEILING AND COORDINATE ALL FINAL LOCATIONS WITH OTHER TRADES ON THE PROJECT TO VERIFY THAT THE LOCATION OF THE OUTLET MAINTAINS 12" OF CLEARANCE FROM THE FRONT OF THE FACEPLATE FOR OWNER ACCESS. ELECTRICAL CONTRACTOR SHALL ROUTE (1) 1" CONDUIT FROM THE BUILDING STRUCTURE TO A SINGLE GANG BACK BOX MOUNTED AT 5' OR LESS ABOVE THE FINISHED CEILING. SECURE CONDUIT AND BACK BOX TO INSURE MINIMAL SWAY MOVEMENT.
	"D#"	DESIGNATES THAT THE ASSOCIATED TECHNOLOGY OUTLET IS INTENDED FOR THE USE OF A NETWORK CONNECTION. THE '#' SHALL BE REPLACED WITH NUMERIC TEXT THAT IDENTIFIES THE TOTAL NUMBER OF CATEGORY 6, NETWORK CABLES THAT ARE TO BE INSTALLED AT THE TECHNOLOGY OUTLET LOCATION. CONTRACTOR TO PROVIDE AND INSTALL CATEGORY 6, NETWORK CABLES, CATEGORY 6, CONNECTORS, STAINLESS STEEL FACEPLATES WITH IDENTIFICATION WINDOWS, LABELS, BLANK INSERTS, AND ANY OTHER MATERIALS REQUIRED TO FURNISH COMPLETELY FUNCTIONAL AND TESTED OUTLET LOCATION. ALL FACEPLATES PROVIDED SHALL CONTAIN A MINIMUM 4-PORTS AND SHALL BE APPROPRIATELY SIZED TO ACCOMMODATE THE NUMBER OF CIRCUITS BEING INSTALLED AT THIS TECHNOLOGY OUTLET LOCATION.
	"W"	DESIGNATES THAT THE ASSOCIATED TECHNOLOGY OUTLET IS INTENDED FOR THE USE OF A WALL MOUNTED TELEPHONE CONNECTION. CONTRACTOR TO PROVIDE AND INSTALL (1) CATEGORY 6, NETWORK CABLE, (1) CATEGORY 6, CONNECTOR, STAINLESS STEEL WALL TELEPHONE FACEPLATE, LABELS, AND ANY OTHER MATERIALS REQUIRED TO FURNISH A COMPLETELY FUNCTIONAL AND TESTED CIRCUIT AT EACH LOCATION SHOWN. CONTRACTOR SHALL MOUNT THIS OUTLET AT +42" AFF AND COORDINATE ALL FINAL LOCATIONS WITH OTHER TRADES ON THE PROJECT TO VERIFY THAT THE LOCATION OF THE OUTLET MAINTAINS 8" OF CLEARANCE ON ALL FOUR SIDES OF THE BACK BOX. OUTLETS SHALL REMAIN CLEAR OF ROOM DOORS, CABINET DOORS, APPLIANCE DOORS, AND SLIDING DRAWERS.
	"AP"	DESIGNATES THAT THE ASSOCIATED TECHNOLOGY OUTLET IS INTENDED FOR THE USE OF A WIRELESS ACCESS POINT CONNECTION. CONTRACTOR TO PROVIDE AND INSTALL (2) CATEGORY 6, NETWORK CABLE, (2) CATEGORY 6, CONNECTOR, STAINLESS STEEL FACEPLATE WITH IDENTIFICATION WINDOWS, LABELS, AND ANY OTHER MATERIALS REQUIRED TO FURNISH A COMPLETELY FUNCTIONAL AND TESTED CIRCUIT AT EACH LOCATION SHOWN. PROVIDE (2) 10' PLENUM PATCH CABLE FOR EACH LOCATION INSTALLED. PATCH CABLE TO BE INSTALLED AND ROUTED BY OWNER.

NOTES TO CONTRACTOR

1. EVERY SYMBOL SHOWN ON LEGEND MAY NOT APPEAR ON DRAWINGS. REFER TO GENERAL ELECTRICAL NOTES FOR WALL-MOUNTED DEVICE MOUNTING HEIGHTS.
2. REFERENCE SPECIFICATIONS FOR MATERIALS AND METHODS.
3. COMPLETE INSTALLATION OF ALL PRODUCTS SHALL BE IN COMPLIANCE WITH ALL CODES, INDUSTRY STANDARDS, COMMON PRACTICES AND MANUFACTURER'S INSTRUCTIONS.
4. ALL EXTERIOR AND WALL MOUNTED CAMERA LOCATIONS AND MOUNTING HEIGHTS MUST BE COORDINATED WITH THE OWNER PRIOR TO ROUGH-IN. COORDINATION MEETINGS SHALL BE SCHEDULED THROUGH THE ARCHITECT'S PROJECT MANAGER.

ACCESS CONTROL LEGEND

GROUP	SYMBOL	DESCRIPTION
DEVICES	CR	WALL OR MULLION MOUNTED ACCESS CONTROL PROXIMITY CARD READER.
	CR	ACCESS CONTROL PROXIMITY CARD READER THAT IS INTEGRATED INTO THE DOOR HARDWARE.
	RB	DOOR RELEASE BUTTON
	PIR	MOTION REQUEST TO EXIT DEVICE
	ACP	DESIGNATES THE LOCATION OF THE ACCESS CONTROL SYSTEM, CONTROL PANEL. ELECTRICAL CONTRACTOR TO PROVIDE 120V. POWER TO PANEL. PROVIDE NETWORK CABLE TO PANEL AND COORDINATE WITH THE OWNER'S TECHNOLOGY DEPARTMENT ON ACQUIRING AN IP ADDRESS.
	IC	WALL OR MULLION MOUNTED, 2-WAY AUDIO/VIDEO INTERCOM DOOR STATION.
	IC	DOOR MOUNTED, 2-WAY AUDIO/VIDEO INTERCOM DOOR STATION. 2-WAY AUDIO/VIDEO INTERCOM MASTER STATION.
	ADA	ADA AUTO DOOR OPEN BUTTON. SHOWN FOR REFERENCE ONLY, BUTTON AND AUTO DOOR OPERATOR PROVIDED AND INSTALLED BY THE DOOR SYSTEM INSTALLER. AUTO DOOR OPERATOR. OPERATOR TO BE PROVIDED AND INSTALLED BY THE DOOR SYSTEM INSTALLER.
	ADO	

NOTES:

1. REFERENCE ACCESS CONTROL SCHEDULE, DIVISION 8 AND DIVISION 28 SPECIFICATIONS FOR ADDITIONAL INFORMATION AND REQUIREMENTS

GENERAL NOTES

1. ALL 120V POWER REQUIRED FOR THE FUNCTIONALITY OF EACH SYSTEM SHALL BE A DEDICATED CIRCUIT AND ON EMERGENCY POWER WHEN AVAILABLE. PROJECTS ELECTRICAL CONTRACTOR SHALL BE RESPONSIBLE FOR ALL POWER TO MAIN CONTROL PANELS, REMOTE POWER SUPPLIES AND ALL HEAD END EQUIPMENT. SYSTEM INSTALLERS SHALL COORDINATE LOCATIONS AND CONNECTIONS WITH THE PROJECT'S ELECTRICAL CONTRACTOR.
2. THE PROJECT'S ELECTRICAL CONTRACTOR SHALL BE RESPONSIBLE FOR ALL IN CONDUITS, BACK BOXES, JUNCTION BOXES, RACEWAYS, AND SLEEVES REQUIRED TO ESTABLISH CLEAR PATHWAYS FOR ALL SYSTEMS. ALL CONDUITS, SLEEVES, BOXES, AND RACEWAYS SHALL BE PROPERLY SIZED TO MAINTAIN A 40% MAXIMUM FILL RATIO.
3. ALL EXPOSED SYSTEM'S WIRING OR WIRING ROUTING ACROSS NON ACCESSIBLE CEILINGS SHALL BE ROUTED IN CONDUIT, PROVIDED AND INSTALLED BY THE PROJECT'S ELECTRICAL CONTRACTOR. SIZE CONDUIT AS REQUIRED TO ROUTE SYSTEMS WITH 40% CABLE FILL RATIO. MINIMUM CONDUIT SIZE SHALL BE 3/4".
4. EACH SYSTEM INSTALLER SHALL BE RESPONSIBLE FOR ENSURING ALL EXTERIOR WALL PENETRATIONS ARE PROPERLY SEALED TO PREVENT ANY MOISTURE FROM ENTERING BUILDING.
5. NO CONDUITS SHALL BE INSTALLED ON THE EXTERIOR OF THE BUILDING. IF EXTERIOR CONDUITS ARE REQUIRED FOR A COMPLETE INSTALLATION, EACH SYSTEM CONTRACTOR SHALL COORDINATE WITH THE PROJECTS CONSULTANT PRIOR TO ANY ROUGH-IN.
6. EACH SYSTEM INSTALLER SHALL PROVIDE AND INSTALL PROTECTIVE BUSHINGS ON ALL CONDUIT STUB OUTS AND SLEEVES TO PREVENT CABLE DAMAGE. BUSHING TO BE INSTALLED PRIOR TO CABLE INSTALLATION. CUTTING BUSHING AND INSTALLING AFTER CABLE IS INSTALLED WILL NOT BE EXCEPTED.
7. ALL CABLE SHALL BE ROUTED DOWN CORRIDORS, PARALLEL AND PERPENDICULAR TO THE BUILDING WALLS AND STRUCTURE. CABLE TO EACH DEVICE SHALL BRANCH OFF OF A MAIN CORRIDOR TRUNK. ROUTING CABLES THROUGH CLASSROOMS, OFFICES, STORAGE ROOMS, RESTROOMS OR ANY TYPE OF ROOM OTHER THAN A CORRIDOR WILL NOT BE ACCEPTED. ENTER ALL ROOMS ABOVE THE ASSOCIATED ROOM DOORWAY.

VIDEO SURVEILLANCE LEGEND

GROUP	SYMBOL	DESCRIPTION
DEVICES		INTERIOR VIDEO SURVEILLANCE CAMERA.
		VANDAL RESISTANT, WEATHER PROOF, EXTERIOR SECURITY CAMERA.
	VRS	VIDEO RECORDING SERVER. REFERENCE SPECIFICATIONS FOR INFORMATION CONCERNING ANALOG OR IP BASED TYPE SYSTEM.

NOTES:

1. REFERENCE ACCESS CONTROL SCHEDULE, DIVISION 8 AND DIVISION 28 SPECIFICATIONS FOR ADDITIONAL INFORMATION AND REQUIREMENTS

AUDIO/VIDEO LEGEND

GROUP	SYMBOL	DESCRIPTION
DEVICES	"#MP"	INDICATES THE LOCATION OF A VIDEO PROJECTOR # TO BE REPLACED WITH "C" OR "W". "C" INDICATES THAT THE DEVICE IS A CEILING MOUNTED DEVICE AND "W" INDICATES IT IS TO BE WALL MOUNTED. CONTRACTOR TO PROVIDE AND INSTALL A PROJECTOR, WIRELESS GATEWAY, CEILING OR WALL MOUNTING KIT, AND HDMI PATCH CABLE FROM THE WIRELESS GATEWAY TO THE PROJECTOR INPUT
	"AV-*#"	INDICATES THAT THE DESIGNATED TECHNOLOGY OUTLET IS INTENDED FOR AN AUDIO/VIDEO (A/V) INPUT. CONTRACTOR TO PROVIDE AND INSTALL A FLOOR MOUNTED OR WALL MOUTED BOX AS INDICATED. PROVIDE POVIDE 2-GANG 3 -1/2" DEEP BACKBOX AND (2) 1.25" CONDUITS FROM THE BOX TO THE NEAREST PLENUM ACCESSIBLE CEILING WITHIN THE SAME ROOM. *# - INDICATE TYPE OF AV INPUT. REFER TO SPEC AND DETAILS SHEETS FOR MORE INFORMATION
	"LCD-*#"	EACH LCD OUTLET SHALL BE A 2-GANG BOX AND TWO (2) 1.25" CONDUITS STUBBING INTO THE ROOMS ACCESSIBLE CEILING. PROVIDE ONE DOUBLE-GANG FACEPLATE WITH TWO (2) DECORA PORTS. PROVIDE A DECORA STYLE INSERT THAT ACCEPTS THE STYLE OF DATA JACK BEING USED FOR STRUCTURED CABLING. PROVIDE ONE(1) CAT6 CABLE AND ONE (1) RG6 COAX. WHEN THERE IS A LOCAL A/V INPUT ASSOCIATED WITH THE DISPLAY, PROVIDE A DECORA INSERT THAT CONFORMS WITH THE SYSTEMS SPECIFIED. OTHERWISE PROVIDE A BLANK INSERT IN THE SECOND PORT
	Ⓢ	PROVIDE AND INSTALL PAGING SPEAKER AT THIS LOCATION TO PROVIDE SOUND DISTRIBUTION

NOTES:

*# - UNLESS SPECIFICALLY NOTED OTHERWISE, THE FOLLOWING SHALL APPLY TO EACH DEVICE SHOWN ON THE ENTIRE PROJECT:

* SHALL BE REPLACED WITH ALPHABETICAL CHARACTERS THAT SHALL INDICATE THE SPECIFIC VENUE THAT THE DEVICE IS ASSOCIATED WITH.

SHALL BE REPLACED WITH A NUMERIC VALUE THAT SHALL IDENTIFY THE SPECIFIC DEVICE WITHIN THE SPECIFIC VENUE.

REFERENCE THE PROJECT SPECIFICATIONS.

THE AUDIO/VIDEO SYSTEM INTEGRATOR SHALL COORDINATE ALL BOX AND CONDUIT SIZE REQUIREMENTS PRIOR TO ROOUGH-IN BY THE PROJECTS ELECTRICAL CONTRACTOR.

SECURITY GENERAL NOTES

1. THE SECURITY CAMERA SYSTEM INSTALLER SHALL BE RESPONSIBLE FOR CONNECTING ALL APPLICABLE SYSTEM EQUIPMENT TO THE OWNER'S NETWORK.
2. THE SYSTEM INSTALLER SHALL PROPERLY SUPPORT ALL INSTALLED SYSTEM CABLING FROM AN APPROVED CABLE SUPPORT SYSTEM AS DETAILED IN SPECIFICATIONS. NO CABLING SHALL BE ROUTED AND TIED DIRECTLY TO BUILDING STEEL, CEILING GRID SUPPORT, CONDUIT, PIPING, OR DUCTWORK. THE CABLE SUPPORT SYSTEM SHALL BE DIRECTLY CONNECTED TO THE BUILDING'S STEEL JOIST. AT LOCATIONS WHERE THE BOTTOM OF THE JOIST IS MORE THAN 5' ABOVE THE CEILING, THE SYSTEM INSTALLER SHALL PROVIDE AND INSTALL THREADED ROD AND ALL REQUIRED MATERIALS TO CONNECT THE THREADED ROD TO THE BUILDING STEEL AND THE CABLE SUPPORT SYSTEM TO THE THREADED ROD. CABLE PATHWAY SHALL NOT BE HIGHER THAN 5' ABOVE THE CEILING AT ANY LOCATIONS.
3. SECURITY CAMERA SYSTEM INSTALLER SHALL PROVIDE A CEILING MOUNTED INSTALLATION KIT RECOMMENDED BY THE MANUFACTURER OF THE CAMERA. EACH CEILING MOUNTED CAMERA KIT SHALL HAVE A SUPPORT WIRE ATTACHED TO THE BUILDING'S STRUCTURE TO PREVENT THE CAMERA FROM DROPPING TO THE FLOOR AT ANY TIME. AT NO POINT SHALL THE WEIGHT OF THE CEILING MOUNTED SECURITY CAMERA BE SUPPORTED BY THE CEILING GRID SYSTEM OR CEILING TILES. ALL CEILING MOUNTED CAMERAS SHALL BE FLUSH MOUNTED.
4. ALL EXTERIOR AND WALL MOUNTED CAMERA LOCATIONS AND MOUNTING HEIGHTS MUST BE COORDINATED WITH THE OWNER PRIOR TO ROUGH-IN. COORDINATION MEETINGS SHALL BE SCHEDULED THROUGH THE ARCHITECT'S PROJECT MANAGER.
5. PROVIDE AND INSTALL MAGNETIC DOOR CONTACT AT ALL ROOF HATCHES ON THE ENTIRE PROJECT. CONTACTS TO BE CONNECTED TO THE BUILDINGS INTRUSION DETECTION SYSTEM.
6. CONTRACTOR TO PROVIDE AND INSTALL A MONITOR RELAY AND ALL REQUIRED MATERIALS TO CONNECT THE RELAY TO THE FREEZER/COOLER TEMPERATURE GAUGE AND BACK TO THE INTRUSION DETECTION SYSTEM, THE INTRUSION DETECTION SYSTEM SHALL BE PROGRAMMED TO NOTIFY THE OWNER'S DESIGNATED PERSONNEL IN THE EVENT OF EXTENSIVE CHANGE IN TEMPERATURE.

DBR
9601 McAllister Freeway, Suite 410
San Antonio, Texas 78216
210.546.0200 v 210.546.0201 f
TBPE Firm Registration NO. 2234

DBR Project Number 196023.000

JC	BV	CL	WJ	MC

PROFESSIONAL SEAL

NOT FOR CONSTRUCTION OR PERMITTING; PRINTED FOR REVIEW ONLY
01/14/2020
WEIFANG WANG, BICSI
BICSI ID #165402

LOGO/CONTACT

martinez ARCHITECTS
Martinez Architect, LP
900 Rockmead, Suite 250
Houston, Texas 77339
281.346.7371

DESIGN TEAM

Architectural
Martinez Architects

Civil Engineer
Maverick Engineering

Structural
Matrix Structural Engineers

MEP
DBR

Landscaping
KDC Associates

FIRE STATION #5
CITY OF MIDLAND
2200 W GOLF COURSE RD
MIDLAND, TX 79701

PROJECT No: MA 18017
DATE: 01/14/2020

No.	Date	Description

TECHNOLOGY & SECURITY SYMBOLS LEGEND

TS001

4.1331

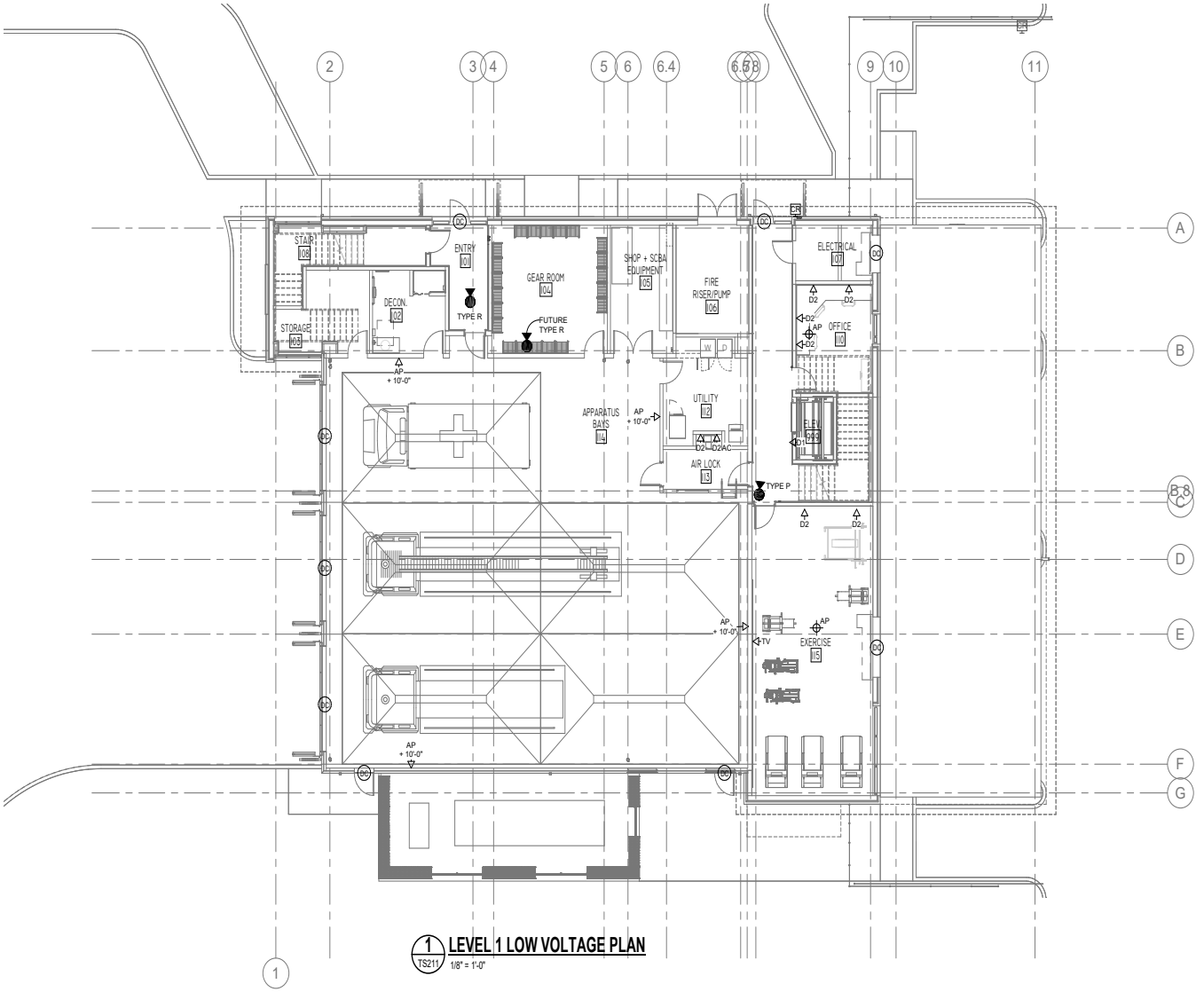

1 TS211 **LEVEL 1 LOW VOLTAGE PLAN**
1/8" = 1'-0"

TRUE NORTH
PROJECT NORTH

DBR
9601 McAllister Freeway, Suite 410
San Antonio, Texas 78216
210.546.0200 v 210.546.0201 f
TBPE Firm Registration No. 2234

DBR Project Number 196024.000

JC | BV | CL | WJ | MC

PROFESSIONAL SEAL

NOT FOR CONSTRUCTION OR PERMITTING; PRINTED FOR REVIEW ONLY
01/14/2020
WEIFANG WANG, BICSI
BICSI ID #165402

martinez ARCHITECTS
Martinez Architect, LP
900 Rockmead, Suite 250
Houston, Texas 77339
281.346.7371

DESIGN TEAM

Architectural
Martinez Architects

Civil Engineer
Maverick Engineering

Structural
Matrix Structural Engineers

MIE/P/T
DBR

Landscape Architect
KDC Associates

-
Consultant 5 Name

FIRE STATION #5

CITY OF MIDLAND
2210 W GOLF COURSE RD
MIDLAND, TX 79701

PROJECT No: **MA 18017**
DATE: **01/14/2020**

No.	Date	Description

LEVEL 1 LOW VOLTAGE PLAN

TS211

4.1332

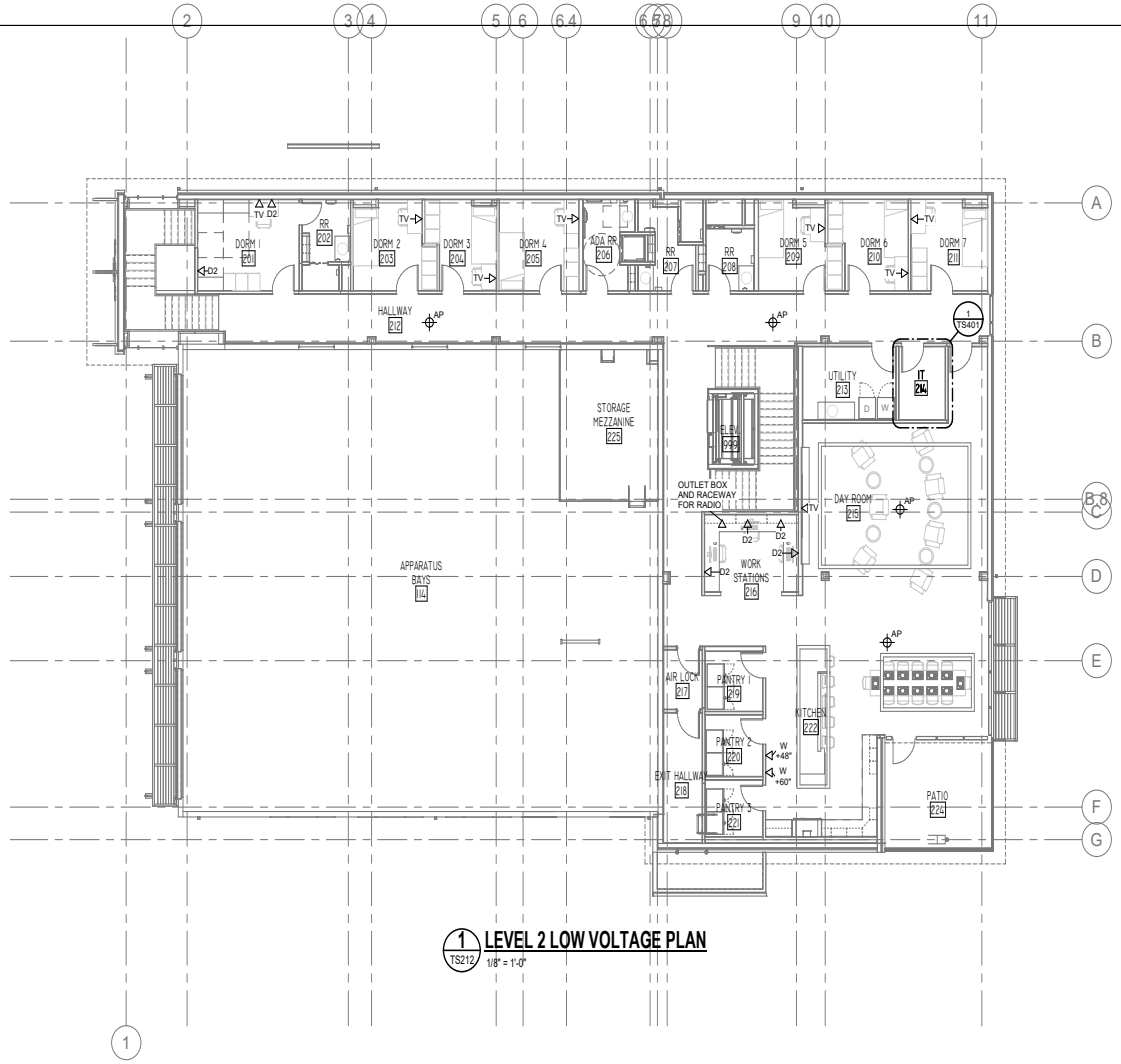

1 TS212 **LEVEL 2 LOW VOLTAGE PLAN**
1/8" = 1'-0"

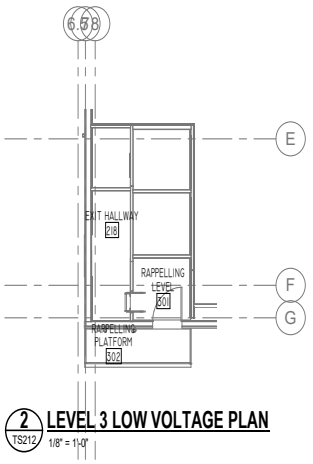

2 TS212 **LEVEL 3 LOW VOLTAGE PLAN**
1/8" = 1'-0"

TRUE NORTH
PROJECT NORTH N

DBR
9601 McAllister Freeway, Suite 410
San Antonio, Texas 78216
210.546.0200 v 210.546.0201 f
TBPE Firm Registration No. 2234

DBR Project Number 196024.000

JC | BV | CL | WJ | MC

PROFESSIONAL SEAL

NOT FOR CONSTRUCTION OR PERMITTING; PRINTED FOR REVIEW ONLY
01/14/2020
WEIFANG WANG, BICSI
BICSI ID #165402

martinez ARCHITECTS
Martinez Architect, LP
900 Rockmead, Suite 250
Houston, Texas 77339
281.346.7371

DESIGN TEAM

Architectural
Martinez Architects

Civil Engineer
Maverick Engineering

Structural
Matrix Structural Engineers

MIE/P/T
DBR

Landscape Architect
KDC Associates

-
Consultant 5 Name

FIRE STATION #5

CITY OF MIDLAND
2210 W GOLF COURSE RD
MIDLAND, TX 79701

PROJECT No: **MA 18017**
DATE: **01/14/2020**

No.	Date	Description

LEVEL 2 & 3 LOW VOLTAGE PLAN

TS212

4.1333

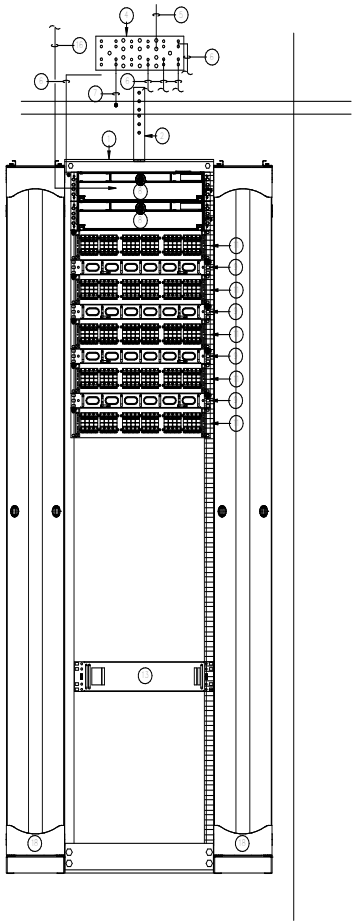

2 TS401 **TELECOMMUNICATIONS RACK ELEVATION**
1 1/2" = 1'-0"

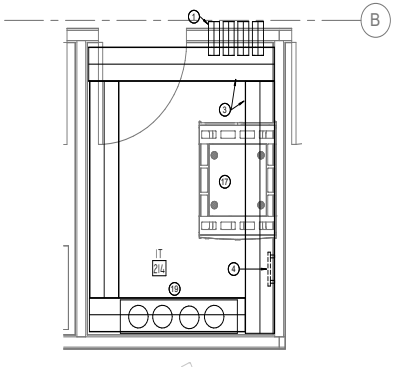

1 TS401 **LEVEL 2 - MDF - IT 214**
1/2" = 1'-0"

TECHNOLOGY KEYED NOTES

1. FOUR (4) 4" SLEEVES
2. 4-POST RACK.
3. 12' WIDE LADDER TRAY.
4. PROVIDE AND INSTALL A 12"X4" WALL MOUNTED, TELECOMMUNICATIONS GROUND BUS BAR (TGBB) AT INDICATED.
5. PROVIDE AND INSTALL A #1/0 STRANDED COPPER GROUND WIRE FROM THE TGBB TO THE BUILDING'S MAIN ENTRANCE GROUND. CONNECTION AT BOTH ENDS SHALL BE MADE UTILIZING A 2-HOLE COMPRESSION LUG. SCREW TYPE BLOCKS WILL NOT BE ACCEPTED.
6. PROVIDE AND INSTALL A #6AWG, STRANDED COPPER GROUND WIRE FROM THE TGBB TO THE COMMUNICATION RACK OR CABINET. CONNECTION AT BOTH ENDS SHALL BE MADE UTILIZING A 2-HOLE, # 6AWG GROUND COMPRESSION LUG. SCREW TYPE BLOCKS WILL NOT BE ACCEPTED.
7. PROVIDE AND INSTALL A #6AWG, STRANDED COPPER GROUND WIRE FROM THE TGBB TO THE LADDER TRAY SYSTEM. CONNECTION AT BOTH ENDS SHALL BE MADE UTILIZING A 2-HOLE, #6AWG GROUND COMPRESSION LUG. SCREW TYPE BLOCKS WILL NOT BE ACCEPTED.
8. TWO R.U. FIBER ENCLOSURE BY OTHERS TO HOUSE INCOMING WAN SERVICE. COORDINATE WITH SERVICE PROVIDER FOR INSTALLATION AND PLACEMENT OF ENCLOSURE WITHIN RACK
9. CONTRACTOR FURNISHED, CONTRACTOR INSTALL HORIZONTAL CABLE MANAGER.
10. PROVIDE AND INSTALL A 24-PORT, PATCH PANEL WITH ALL REQUIRED MOUNTING HARDWARE AND TERMINATION COMPONENTS, FOR THE TERMINATION OF A MDF-TO-IDF MULTI-PAIR TIE CABLE. TERMINATE 1-PAIR PER PORT ON PINS 4 AND 5.
11. PROVIDE AND INSTALL A 48-PORT, PATCH PANEL WITH ALL REQUIRED MOUNTING HARDWARE AND TERMINATION COMPONENTS, FOR THE TERMINATION OF ALL, IP TELEPHONE, LAN OUTLET, AND WIRELESS CATEGORY 6 CABLING ORIGINATING IN THIS COMMUNICATIONS CLOSET. PANELS SHOWN ARE ESTIMATED. CONTRACTOR TO PROVIDE THE REQUIRED AMOUNT TO TERMINATE 125% OF THE TOTAL NUMBER OF CABLES IN EACH TELECOMMUNICATION ROOM. ALL TERMINATIONS SHALL COMPLY WITH THE 568B PIN-OUT CONFIGURATION.
12. PROVIDE AND INSTALL A 48-PORT, PATCH PANEL WITH ALL REQUIRED MOUNTING HARDWARE AND TERMINATION COMPONENTS, FOR THE TERMINATION OF ALL, IP INTERCOM SPEAKER CATEGORY 6 CABLING ORIGINATING IN THIS COMMUNICATIONS CLOSET. PANELS SHOWN ARE ESTIMATED. CONTRACTOR TO PROVIDE THE REQUIRED AMOUNT TO TERMINATE 125% OF THE TOTAL NUMBER OF CABLES IN EACH TELECOMMUNICATION ROOM. ALL TERMINATIONS SHALL COMPLY WITH THE 568B PIN-OUT CONFIGURATION.
13. OWNER PROVIDED AND INSTALLED RACK MOUNTED UPS.
14. PROVIDE 24 PORT PATCH PANEL FOR DEMARC MULTI-PAIR CABLING EXTENSION. TERMINATE CABLE ON PINS 4 AND 5 OF INDICATED PATCH PANEL
15. CONTRACTOR SHALL EXTEND TELEPHONE DEMARC CABLING IN TO MDF. PROVIDE 25 PAIR TIE CABLE BETWEEN MPOE AND DEMARC PATCH PANEL
16. INDICATES INCOMING SERVICE PROVIDED BY OTHERS.
17. FREE-STANDING 4-POST, 7', FLOOR MOUNTED NETWORK RACK
18. VERTICAL CABLE MANAGER
19. FOUR (4) 4" OSP CONDUITS FROM UTILITY POLES. TERMINATE TO 3' AFF.
20. EQUIPMENT CABINET

DBR
9601 McAllister Freeway, Suite 410
San Antonio, Texas 78216
210.546.0200 v 210.546.0201 f
TBPE Firm Registration No. 2234

DBR Project Number 196024.000

JC	BV	CL	WJ	MC

PROFESSIONAL SEAL

NOT FOR CONSTRUCTION OR PERMITTING; PRINTED FOR REVIEW ONLY
01/14/2020
WEIFANG WANG, BICSI
BICSI ID #165402

martinez ARCHITECTS
Martinez Architect, LP
900 Rockmead, Suite 250
Houston, Texas 77339
281.346.7371

DESIGN TEAM

Architectural
Martinez Architects

Civil Engineer
Maverick Engineering

Structural
Matrix Structural Engineers

MIE/P/T
DBR

Landscape Architect
KDC Associates

-
Consultant 5 Name

FIRE STATION #5
CITY OF MIDLAND
2210 W GOLF COURSE RD
MIDLAND, TX 79701

PROJECT No: **MA 18017**
DATE: **01/14/2020**

No.	Date	Description

LOW VOLTAGE ENLARGED FLOOR PLANS

TS401

4.1334

01 NOT USED NOT TO SCALE

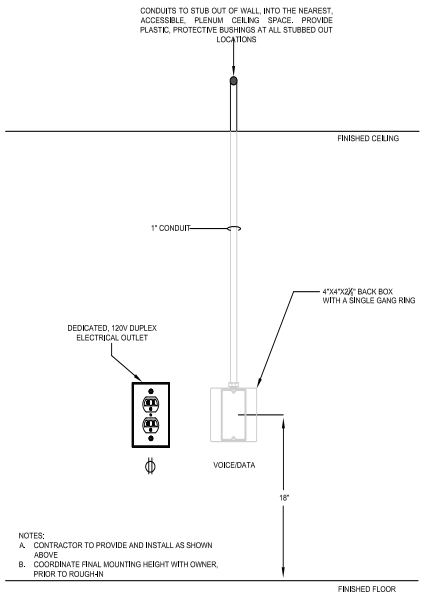

02 TYPICAL VOICE/DATA OUTLET NOT TO SCALE

03 NOT USED NOT TO SCALE

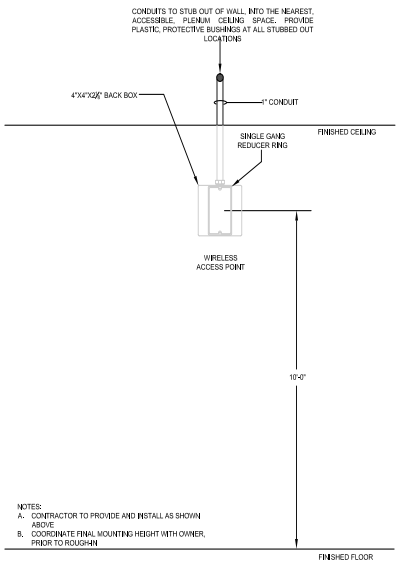

04 WALL MOUNTED WIRELESS AP NOT TO SCALE

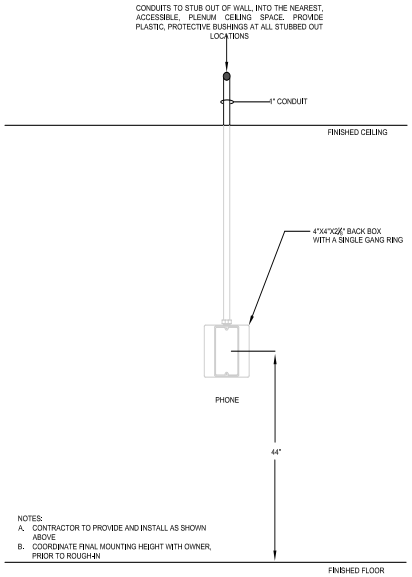

05 WALL MOUNTED TELEPHONE NOT TO SCALE

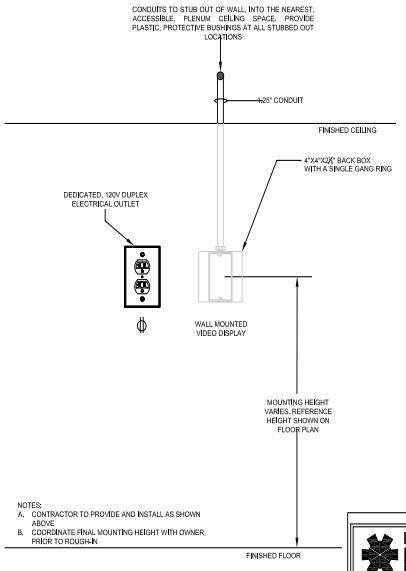

06 WALL MOUNTED TV DISPLAY NOT TO SCALE

DBR
9601 McAllister Freeway, Suite 410
San Antonio, Texas 78216
210.546.0200 v 210.546.0201 f
TBPE Firm Registration NO. 2234

DBR Project Number 196023.000

JC	BV	CL	WJ	MC

PROFESSIONAL SEAL

NOT FOR CONSTRUCTION OR PERMITTING; PRINTED FOR REVIEW ONLY
01/14/2020
WEIFANG WANG, BICSI
BICSI ID #165402

LOGO/CONTACT

martinez ARCHITECTS
Martinez Architect, LP
900 Rockmead, Suite 250
Houston, Texas 77339
281.346.7371

DESIGN TEAM

Architectural
Martinez Architects

Civil Engineer
Maverick Engineering

Structural
Matrix Structural Engineers

MEP
DBR

Landscaping
KDC Associates

FIRE STATION #5

CITY OF MIDLAND
2200 W GOLF COURSE RD
MIDLAND, TX 79701

PROJECT No: MA 18017
DATE: 01/14/2020

No.	Date	Description

TECHNOLOGY & SECURITY DETAILS

TS501

4.1335

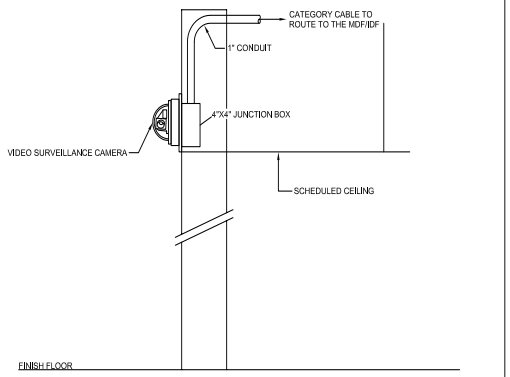

01 INTERIOR WALL MOUNTED DOME CAMERA - VERTICAL MOUNT SCALE: N.T.S.

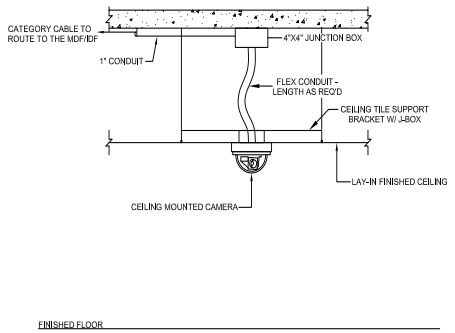

02 INTERIOR CEILING MOUNTED DOME CAMERA W/FLEX SCALE: N.T.S.

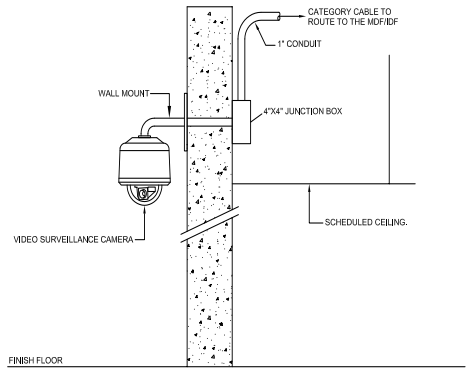

03 EXTERIOR WALL MOUNTED DOME CAMERA SCALE: N.T.S.

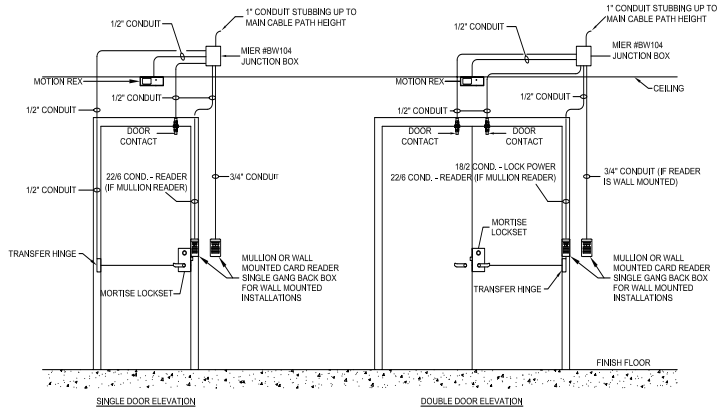

04 ACCESS CONTROL - ELECTRIFIED MORTISE LOCK DOOR ELEVATION SCALE: N.T.S.

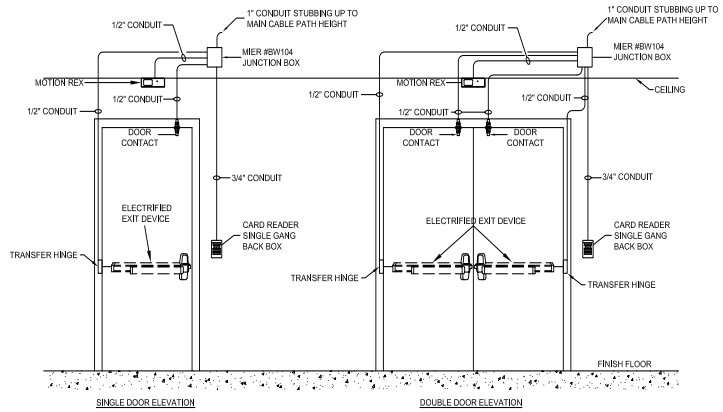

05 ACCESS CONTROL - ELECTRIFIED EXIT DEVICE DOOR ELEVATION SCALE: N.T.S.

PROFESSIONAL SEAL

NOT FOR CONSTRUCTION OR PERMITTING; PRINTED FOR REVIEW ONLY
01/14/2020
WEIFANG WANG, BICSI
BICSI ID #165402

LOGO/CONTACT

martinez ARCHITECTS
Martinez Architect, LP
900 Rockmead, Suite 250
Houston, Texas 77339
281.346.7371

DESIGN TEAM

Architectural
Martinez Architects

Civil Engineer
Maverick Engineering

Structural
Matrix Structural Engineers

MEP
DBR

Landscaping
KDC Associates

FIRE STATION #5

CITY OF MIDLAND
2200 W GOLF COURSE RD
MIDLAND, TX 79701

PROJECT No: MA 18017
DATE: 01/14/2020

No.	Date	Description

DBR
9601 McAllister Freeway, Suite 410
San Antonio, Texas 78216
210.546.0200 v 210.546.0201 f
TBPE Firm Registration NO. 2234

DBR Project Number 196023.000

JC	BV	CL	WJ	MC

TECHNOLOGY & SECURITY DETAILS

TS502

4.1336

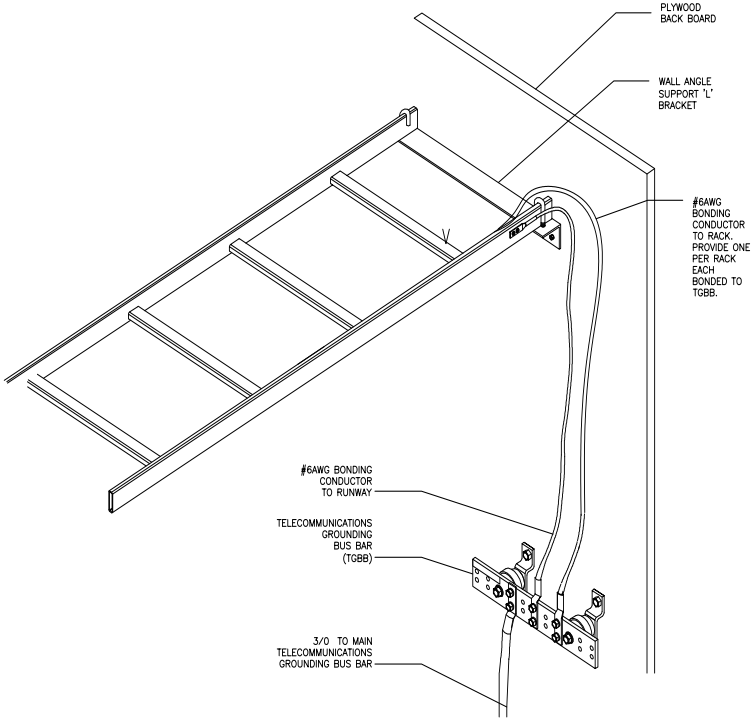

03 CABLE RUNWAY - - GROUNDING AND BONDING NOT TO SCALE

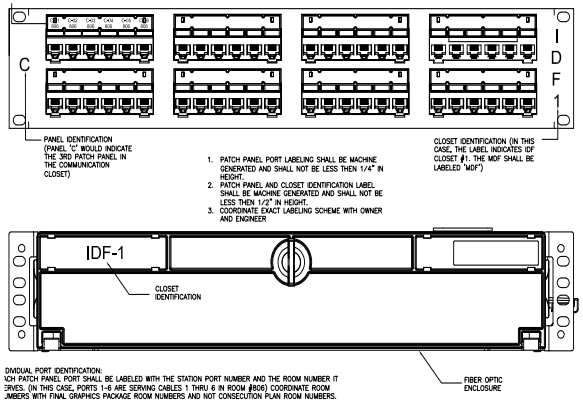

02 FIBER ENCLOSURE/ COPPER PATCH PANEL LABELING DETAIL NOT TO SCALE

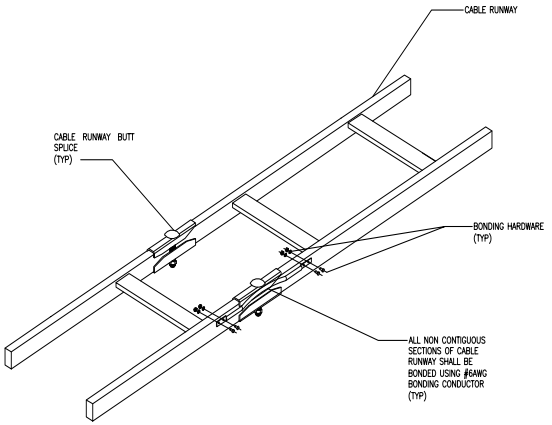

04 CABLE RUNWAY - BONDING AND BUTT SPLICE NOT TO SCALE

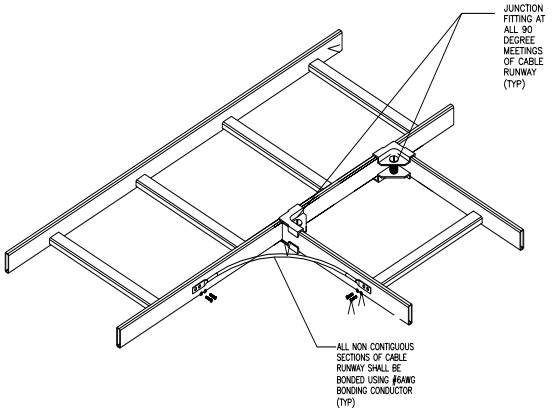

06 CABLE RUNWAY - JUNCTION AND BONDING NOT TO SCALE

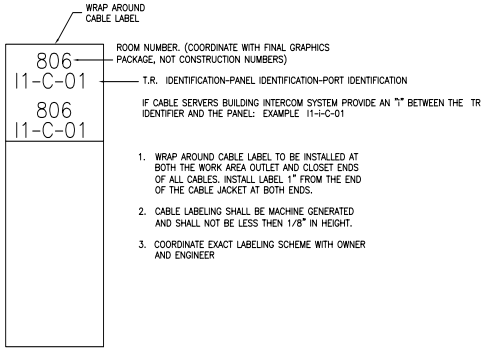

07 CABLE LABEL DETAIL NOT TO SCALE

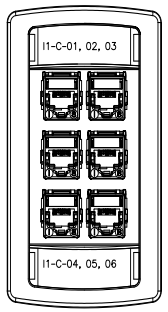

1. FACEPLATE LABELING SHALL BE MACHINE GENERATED AND SHALL NOT BE LESS THEN 1/4" IN HEIGHT.
2. PROVIDE BLANK INSERTS FOR ANY UNUSED PORTS
3. COORDINATE EXACT LABELING SCHEME WITH OWNER AND ENGINEER.

08 FACEPLATE LABEL DETAIL NOT TO SCALE

DBR
9601 McAllister Freeway, Suite 410
San Antonio, Texas 78216
210.546.0200 v 210.546.0201 f
TBPE Firm Registration NO. 2234

DBR Project Number 196023.000

JC	BV	CL	WJ	MC

PROFESSIONAL SEAL

NOT FOR CONSTRUCTION OR PERMITTING; PRINTED FOR REVIEW ONLY
01/14/2020
WEIFANG WANG, BICSI
BICSI ID #165402

LOGO/CONTACT

martinez ARCHITECTS
Martinez Architect, LP
900 Rockmead, Suite 250
Houston, Texas 77339
281.346.7371

DESIGN TEAM

Architectural
Martinez Architects

Civil Engineer
Maverick Engineering

Structural
Matrix Structural Engineers

MEP
DBR

Landscaping
KDC Associates

FIRE STATION #5

CITY OF MIDLAND
2200 W GOLF COURSE RD
MIDLAND, TX 79701

PROJECT No: MA 18017
DATE: 01/14/2020

No.	Date	Description

TECHNOLOGY & SECURITY DETAILS

TS503

4.1337

01 CAMERA SCHEDULE

QTY	CAMERA TYPE	ENVIRONMENT	MOUNTING TYPE	SENSORS	VIEW ANGLE	CAMERA MANUFACTURER	CAMERA MODEL	MOUNTING ACCESSORIES	LENS	FRAME RATE	CODEC	RESOLUTION	% MOTION	DAYS OF RETENTION
3	A	EXTERIOR	CORNER MOUNT	4-SENSOR / MULTI DIRECTIONAL	270									
	B	EXTERIOR	WALL MOUNT	4-SENSOR / MULTI DIRECTIONAL	180									
	C	EXTERIOR	UNDER CANOPY MOUNT	4-SENSOR / MULTI DIRECTIONAL	360									
	D	EXTERIOR	CORNER MOUNT	1-SENSOR	120									
1	E	EXTERIOR	WALL MOUNT	1-SENSOR	120									
	F	EXTERIOR	UNDER CANOPY MOUNT	1-SENSOR	120									
	G	EXTERIOR	NOT USED	NOT USED										
	H	EXTERIOR	NOT USED	NOT USED										
	J	INTERIOR	NOT USED	NOT USED										
	K	INTERIOR	CORNER MOUNT	4-SENSOR / MULTI DIRECTIONAL	270									
	L	INTERIOR	WALL MOUNT	4-SENSOR / MULTI DIRECTIONAL	180									
	M	INTERIOR	CEILING MOUNT	4-SENSOR / MULTI DIRECTIONAL	360									
	N	INTERIOR	CORNER MOUNT	2-SENSOR / MULTI DIRECTIONAL	180									
1	P	INTERIOR	WALL MOUNT	2-SENSOR / MULTI DIRECTIONAL	180									
	Q	INTERIOR	CEILING MOUNT	2-SENSOR / MULTI DIRECTIONAL	180									
2	R	INTERIOR	CORNER MOUNT	1-SENSOR	120									
	S	INTERIOR	WALL MOUNT	1-SENSOR	120									
	T	INTERIOR	CEILING MOUNT	1-SENSOR	120									

DBR
9601 McAllister Freeway, Suite 410
San Antonio, Texas 78216
210.546.0200 v 210.546.0201 f
TBPE Firm Registration NO. 2234

DBR Project Number 196023.000

JC	BV	CL	WJ	MC

PROFESSIONAL SEAL

NOT FOR CONSTRUCTION OR PERMITTING; PRINTED FOR REVIEW ONLY
01/14/2020
WEIFANG WANG, BICSI
BICSI ID #165402

LOGO/CONTACT

martinez ARCHITECTS
Martinez Architect, LP
900 Rockmead, Suite 250
Houston, Texas 77339
281.346.7371

DESIGN TEAM

Architectural
Martinez Architects

Civil Engineer
Maverick Engineering

Structural
Matrix Structural Engineers

MEP
DBR

Landscaping
KDC Associates

FIRE STATION #5
CITY OF MIDLAND
2200 W GOLF COURSE RD
MIDLAND, TX 79701

PROJECT No: **MA 18017**
DATE: **01/14/2020**

No.	Date	Description

TECHNOLOGY & SECURITY SCHEDULES

TS601

FIRE STATION #11

CITY OF MIDLAND

martinez ARCHITECTS

Martinez Architects, LP
900 Rockmead, Suite 250
Houston, Texas 77339
281.346.7371

REGISTERED ARCHITECT
JUSTIN E. MYERS
24640
STATE OF TEXAS

Martinez Architects Project No. MA 18017

Project Address: 6600 BRIARWOOD AVE
MIDLAND, TX 79707

4.1339

DESIGN TEAM

Architectural
Martinez Architects
900 Rockmead, Suite 250
Houston, TX 77339
281.346.7371

Civil Engineer
Maverick Engineering
1909 West Wall Street, Suite K
Midland, Texas 79701
(432) 262-0999

Structural
Matrix Structural Engineers
5177 Richmond Avenue, Suite 670
Houston, Texas 77056
(713) 664-0130

M/E/P/T
DBR
8626 Tesoro Drive, Suite 702
San Antonio, Texas 78217
(210) 546-0200

Landscape Architect
KDC Associates
4400 N. Big Spring, Suite 203
Midland, Texas 79705
(432) 686-8001

INDEX OF DRAWINGS

GENERAL INFORMATION

G000	COVER PAGE (THIS SHEET)
G001	GENERAL NOTES
G002	BUILDING CODE ANALYSIS
G003	BUILDING CODE ANALYSIS
G004	SITE CODE ANALYSIS

CIVIL

C 100	COVER SHEET
C 111	EXISTING SITE TOPOGRAPHY
C 120	SWPPP
C 130	SWPPP DETAILS
C 200	DIMENSIONAL PLAN
C 210	PAVING PLAN
C 220	PAVING DETAILS
C 221	PAVING DETAILS
C 222	PAVING DETAILS
C 230	GRADING PLAN
C 240	DRAINAGE PLAN PRE VS POST
C 241	DRAINAGE PLAN - BASINS
C 300	UTILITY PLAN
C 310	WATER DETAILS
C 311	WATER DETAILS
C 320	SEWER DETAILS
C 500	BARRICADE DETAILS
C 501	SIGN DETAILS

LANDSCAPE

L 1.0	LANDSCAPE PLAN
L 2.0	LANDSCAPE-BASE BID
L 3.0	HYDROSEED PLAN
L 4.0	PLANTING DETAILS
L 5.0	IRRIGATION PLAN
L 6.0	IRRIGATION DETAILS
L 7.0	LANDSCAPE-ADD ALT 1
L 8.0	LANDSCAPE-ADD ALT 2

ARCHITECTURAL

A101	ARCHITECTURE SITE PLAN - BASE BID
A101.1	ARCHITECTURE SITE PLAN - ALTERNATE #1
A101.2	ARCHITECTURE SITE PLAN - ALTERNATE #2
A102	SITE DETAILS
A201	LEVEL 1 - FIRE STATION
A202	LEVEL 1 - ADD ALTERNATES #1&2
A203	MEZZANINE PLAN
A204	DIMENSIONED FLOOR PLAN
A205	PARTITION TYPES
A301	ROOF PLAN
A302	ROOF DETAILS
A401	EXTERIOR ELEVATIONS - FIRE STATION
A402	EXTERIOR ELEVATIONS - FIRE STATION
A403	EXTERIOR ELEVATIONS - ALTERNATES #1 & #2
A404	BUILDING SECTIONS
A501	WALL SECTIONS - FIRE STATION
A502	WALL SECTIONS - FIRE STATION
A503	WALL SECTIONS - FIRE STATION
A504	WALL SECTIONS - BID ALTERNATE #2
A601	ENLARGED FLOOR PLANS
A602	INTERIOR ELEVATIONS
A603	INTERIOR ELEVATIONS
A701	LEVEL 1 REFLECTED CEILING PLAN - FIRE STATION
A702	LEVEL 1 REFLECTED CEILING PLAN - BID ALTERNATES #1 & #2
A801	EXTERIOR DETAILS
A803	PLAN DETAILS
A804	PLAN DETAILS
A805	MILLWORK DETAILS
A806	MEZZANINE FRAMING DETAILS
A901	FINISH SCHEDULE
A902	DOOR AND WINDOW SCHEDULE
A903	LEVEL 1 FINISH PLAN
A905	SIGNAGE DETAIL & SCHEDULE
A 906	EQUIPMENT SCHEDULE

STRUCTURAL

S 000	COVER SHEET
S 001	3D CONCEPTUAL
S 101	GENERAL NOTES
S 102	GENERAL NOTES
S 103	GENERAL NOTES
S 201	FOUNDATION PLAN -FIRE STATION
S 202	FOUNDATION PLAN - SUPPORT COMPONENTS
S 211	MEZZANINE FRAMING & LOW ROOF FRAMING PLANS
S 212	HIGH ROOF FRAMING PLAN
S 213	ROOF FRAMING PLANS - SUPPORT COMPONENTS
S 301	FOUNDATION DETAILS
S 302	FOUNDATION DETAILS
S 303	FOUNDATION DETAILS
S 304	FOUNDATION DETAILS
S 305	FOUNDATION DETAILS
S 306	FOUNDATION DETAILS
S 401	FRAMING DETAILS
S 402	FRAMING DETAILS
S 403	FRAMING DETAILS
S 404	FRAMING DETAILS
S 501	FLOOR FRAMING DETAILS
S 502	FLOOR FRAMING DETAILS
S 601	ROOF FRAMING DETAILS
S 602	ROOF FRAMING DETAILS
S 603	ROOF FRAMING DETAILS
S 604	ROOF FRAMING DETAILS
S 605	ROOF FRAMING DETAILS
S 606	ROOF FRAMING DETAILS
S 607	ROOF FRAMING DETAILS
S 608	ROOF FRAMING DETAILS
S 609	ROOF FRAMING DETAILS
S 610	ROOF FRAMING DETAILS
S 701	MASONRY DETAILS
S 702	MASONRY DETAILS
S 703	MASONRY DETAILS
S 801	BRACE ELEVATIONS & DETAILS
S 802	BRACE DETAILS

MECHANICAL

MEP 101.1	MEP SITE PLAN - ALTERNATE #1
MEP 101.2	MEP SITE PLAN - ALTERNATE #2
MEP 101	MEP SITE PLAN - BASE BID
MEP 301	MEP SITE PLAN - ADD ALTERNATES 1 & 2
M 001	MECHANICAL SYMBOLS AND ABBREVIATIONS
M 201	LEVEL 1 & MEZANINE MECHANICAL PLAN
M 501	MECHANICAL SCHEDULES
M 502	MECHANICAL SCHEDULES
M 601	MECHANICAL DETAILS
M 602	MECHAICAL DETAILS
M 603	MECHANICAL VRF DIAGRAMS

ELECTRICAL

E 001	ELECTRICAL SYMBOL LEGEND
E 101	LEVEL 1 & MEZZANINE LIGHTING PLAN
E 201	LEVEL 1 POWER PLAN
E 301	MEZZANINE & ENLARGED POWER PLANS
E 401	ELECTRICAL ONE-LINE DIAGRAM
E 501	ELECTRICAL SCHEDULES
E 502	ELECTRICAL SCHEDULES
E 601	ELECTRICAL DETAILS
E 602	ELECTRICAL DETAILS

PLUMBING

P 000	PLUMBING SYMBOLS
P 201	LEVEL 1 & MEZZANINE PLUMBING PLAN
P 401	PLUMBING RISER DIAGRAMS
P 402	PLUMBING RISER DIAGRAMS
P 501	PLUMBING SCHEDULES
P 601	PLUMBING DETAILS
P 602	PLUMBING DETAILS

SECURITY / TECHNOLOGY

TS 001	TECHNOLOGY & SECURITY SYMBOLS LEGEND
TS 201	LEVEL 1 & MEZZANINE LOW VOLTAGE PLAN
TS 401	TECHNOLOGY & SECURITY DETAILS
TS 501	TECHNOLOGY & SECURITY DETAILS
TS 502	TECHNOLOGY & SECURITY DETAILS
TS 503	TECHNOLOGY & SECURITY DETAILS
TS 601	TECHNOLOGY SCHEDULES

DRAWING ISSUE

30-JUL-19	ISSUE FOR PERMIT
16-JAN-20	ISSUE FOR APPROVAL TO BID

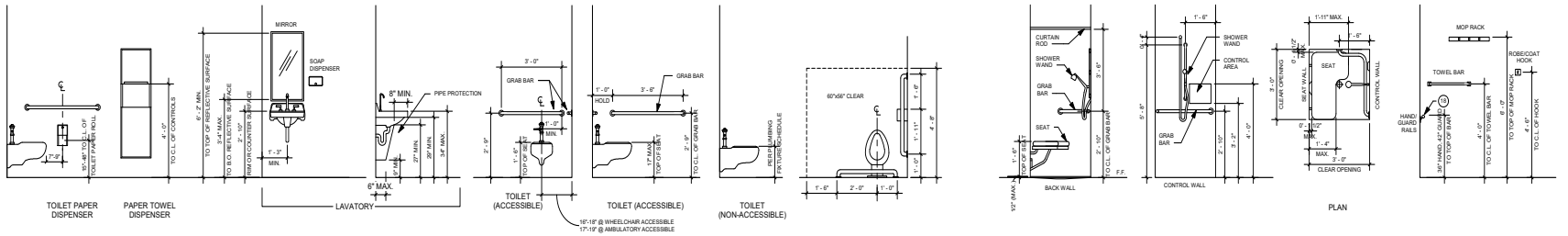

9 FIXTURES / DEVICE MOUNTING HEIGHTS
SCALE: N/A

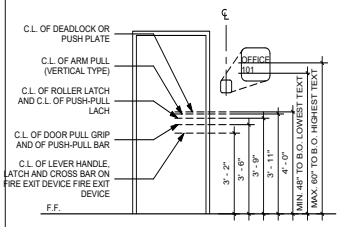

8 DOOR HARDWARE
SCALE: N/A

1. ALL SIGNAGE TO BE COMPLIANT WITH ADA/TAS STANDARDS
2. CONTRACTOR SHALL COORDINATE ALL ROOM NAMES WITH ARCHITECT PRIOR TO FABRICATION
3. ARCHITECT SHALL SELECT COLORS AND PATTERNS FROM THE FULL RANGE OF SHERWIN WILLIAMS PAINT COLORS AND WILSON ART PLASTIC LAMINATE SELECTIONS.
4. CONTRACTOR TO COORDINATE W/ OWNER FOR LOGO

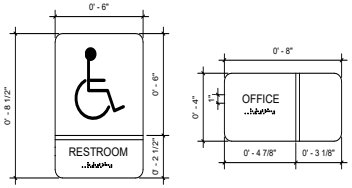

5 INTERIOR SIGNAGE
SCALE: N/A

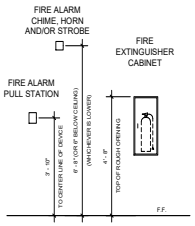

1. THE FOLLOWING FACILITY SHALL BE EQUIPPED THROUGHOUT WITH FIRE ALARM MONITORING DEVICES. FIRE ALARM SHALL BE MONITORED 24/7 BY CY-FAIR DISPATCH LOCATED AT 9101 WHEATCROSS DR. HOUSTON TEXAS 77095. FIRE ALARM SUBCONTRACTOR SHALL SUBMIT DESIGN/PLANS FOR REVIEW.
2. CONTRACTOR TO COORDINATE SMOKE DETECTORS, AUDIO/VISUAL NOTIFICATION DEVICES, HEAT DETECTORS, ETC. FOR FULL SYSTEM COMPLIANCE WITH HARRIS COUNTY FIRE MARSHALS OFFICE.
3. REFERENCE MEP/S/T SHEETS FOR ADDITIONAL INFORMATION AND LOCATION OF DEVICES.
4. FIRE ALARM SUBCONTRACTOR SHALL PROVIDE A COMPLETE DESIGN OF THE FIRE ALARM SYSTEM FOR REVIEW AND APPROVAL BY THE ENGINEER OF RECORD.
5. FIRE ALARM SUBCONTRACTOR SHALL PAY AND ACQUIRE ALL NECESSARY APPROVALS AND PERMITS FROM AUTHORITY HAVING JURISDICTION.

4 FIRE ALARM PROTECTION DEVICES
SCALE: N/A

ACOUS	ACOUSTICAL	FF	FINISH FLOOR	MSTUD	METAL STUD
ADJ	ADJUSTABLE	FIN	FINISH	N	NORTH
AFF	ABOVE FINISH FLOOR	FRP	FIBERGLASS REINFORCED PLASTIC	NIC	NOT IN CONTRACT
ALUM	ALUMINUM			NO	NUMBER
APPROX	APPROXIMATE	FL	FLOOR	NTS	NOT TO SCALE
ARCH	ARCHITECT(URAL)	GA	GAUGE	OC	ON CENTER
BD	BOARD	GALV	GALVANIZED	OD OPP	OUTSIDE DIAMETER OPPOSITE
BLDG	BUILDING	GL	GLAZING	PL	PLASTIC LAMINATE
CL	CENTER LINE	GYP	GYPSUM	PLYWD	PLYWOOD
CLG	CEILING	HM	HOLLOW METAL	PTD	PAINTED
CO	CLEAN OUT	HR	HOUR	R	RADIUS
COL	COLUMN	HT	HEIGHT	RD	ROOF DRAIN
CONC	CONCRETE	HW	HARDWARE	RE	REFERENCE
CONTR	CONTRACTOR	HVAC	HEATING, VENTILATION & A.C.	REQ'D	REQUIRED
DIA	DIAMETER	INS	INSULATE(D) (ION)	R.R.	RESTROOM
DIM	DIMENSION	INT	INTERIOR	S	SOUTH
DN	DOWN	JT	JOINT	SCH	SCHEDULE
DWG	DRAWING	LAM	LAMINATED	SHT	SHEET
E	EAST	LT	LIGHT	SIM	SIMILAR
EA	EACH	LTG	LIGHTING	SPEC	SPECIFICATIONS
EDF	ELECTRIC DRINKING FOUNTAIN	MAS	MASONRY	STOR	STORAGE
EL	ELEVATION	MATL	MATERIAL	STL	STEEL
ELEC	ELECTRIC	MAX	MAXIMUM	STRUCT	STRUCTURE (URAL)
EQ	EQUAL	MECH	MECHANICAL	TEMP	TEMPERED
EQMT	EQUIPMENT	MFR	MANUFACTURER	TOS	TOP OF STEEL
EXIST	EXISTING	MH	MANHOLE	TYP	TYPICAL
EXP	EXPOSED	MIN	MINIMUM	UNFIN	UNFINISHED
EXT	EXTERIOR	MISC	MISCELLANEOUS	VCT	VINYL COMPOSITION TILE
FD	FLOOR DRAIN	MTG	MOUNTING	VER	VERIFY
FEC	FIRE EXTINGUISHER CABINET	MTL	METAL	WD	WOOD

2 ABREVIATIONS

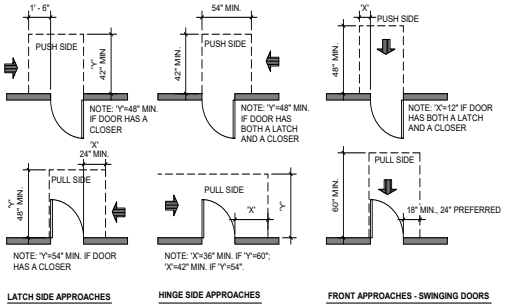

7 TYPICAL DOOR CLEARANCES
SCALE: N/A

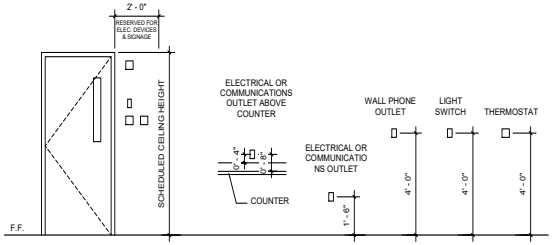

6 ELECTRICAL / COMMUNICATION DEVICES
SCALE: N/A

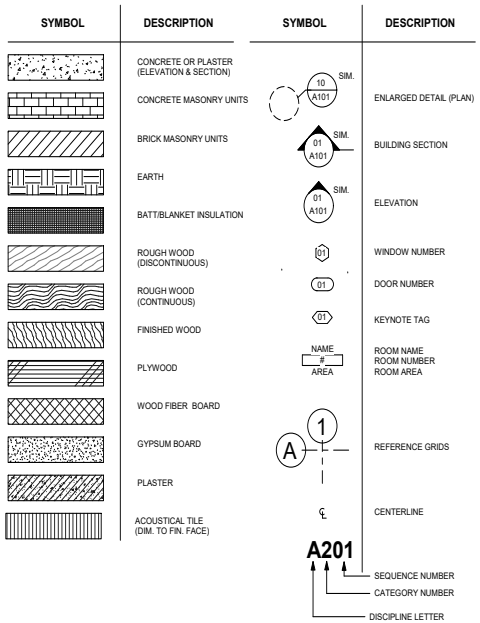

3 SYMBOL LEGEND

1. CONTRACTOR SHALL NOTIFY ARCHITECT OF ANY AND ALL DISCREPANCIES OR CONFLICTS IN FIELD CONDITIONS PRIOR TO FABRICATION, INSTALLATION AND/OR CONSTRUCTION.
2. ALL INCONSISTENCIES BETWEEN DRAWINGS AND SPECIFICATIONS OR WITHIN EITHER DOCUMENT NOT CLARIFIED BY AN ADDENDUM, THE BETTER QUALITY OR GREATER QUANTITY OF WORK SHALL BE INCLUDED IN THE BID.
3. DO NOT SCALE THESE DRAWINGS - USE DIMENSIONS SHOWN @ ALL LOCATIONS (F.V. ALL DIMS PRIOR TO CONSTRUCTION)
4. ALL DIMENSIONS INDICATED ARE TO BACK OF CURB U.N.O.
5. CONTRACTOR TO COMPLY WITH ALL LOCAL BUILDING CODE REQUIREMENTS & TEXAS ACCESSIBILITY STANDARDS.
6. MINIMUM AND MAXIMUM CLEARANCES AND DIMENSIONS SHALL COMPLY WITH TEXAS ACCESSIBILITY STANDARDS
7. EXISTING CURBS, SIDEWALKS, AND DRIVEWAYS IN PUBLIC STREET RIGHTS-OF-WAY OR EASEMENTS DAMAGED OR REMOVED DURING CONSTRUCTION SHALL BE REPLACED TO LOCAL STANDARDS. ALL OTHER CURBS, SIDEWALKS AND DRIVEWAYS, NOT SHOWN TO BE REMOVED, DAMAGED BY CONSTRUCTION SHALL BE REPLACED IN ACCORDANCE WITH THE DETAILS CONTAINED IN THESE PLANS.
8. CONTRACTOR SHALL MARK EXIST. UTILITIES IN FIELD PRIOR TO EXCAVATION. CONTRACTOR IS RESPONSIBLE FOR ANY REPAIR NEEDED TO THESE SYSTEMS IF DAMAGED.
9. PRIOR TO BEGINNING WORK, CONTRACTOR SHALL VERIFY THE LOCATION OF CONTROL POINTS, TEMP. BENCHMARK ELEVATIONS, AND ACCURACY OF EXIST. GRADES. ADVISE OWNER AND ARCHITECT OF ANY DISCREPANCIES PRIOR TO BEGINNING WORK.
10. CONTRACTOR TO USE LINE INDICATOR AND FIELD VERIFY LOCATIONS OF ANY EXISTING UTILITIES AND OTHER FACILITIES BEFORE COMMENCING WORK. CONTRACTOR AGREES TO BE FULLY RESPONSIBLE FOR ANY AND ALL DAMAGES WHICH MIGHT BE OCCASIONED BY HIS FAILURE TO LOCATE AND PRESERVE ANY AND ALL EXISTING FACILITIES.
11. CONTRACTOR TO PRELIMINARY LAY OUT. ONCE LAID OUT, REVIEW WITH ARCH. BEFORE PROCEEDING. COORDINATE ALL DIMENSIONS & REPORT ANY DISCREPANCIES TO ARCHITECT BEFORE STARTING ANY WORK.
12. CONTRACTOR SHALL CONTACT LOCAL M.U.D. DISTRICT FOR SANITARY SEWER/WATER CONNECTION COORDINATION AND FOR ALL FEES REQUIRED. SEWER/WATER IMPACT FEES BY OWNER.
13. CONTRACTOR IS RESPONSIBLE FOR HIS OWN HORIZONTAL AND VERTICAL CONTROL REFERENCE POINTS AND CONSTRUCTION STAKING AS INCIDENTAL TO THE PROJECT.
14. CONTRACTOR IS RESPONSIBLE FOR PROVIDING AND MAINTAINING ALL BARRICADES, WARNING SIGNS, FLASHING LIGHTS, AND TRAFFIC CONTROL DEVICES IN CONFORMANCE WITH PART VI OF THE "TEXAS MANUAL ON UNIFORM TRAFFIC CONTROL DEVICES"
15. OFF DUTY UNIFORMED POLICE OFFICER IS REQUIRED TO DIRECT TRAFFIC WHERE TRAFFIC LANES ARE BLOCKED.
16. CONTRACTOR TO FIELD VERIFY ALL SITE/TOPOGRAPHIC INFORMATION PRIOR TO BEGINNING WORK.
17. CONTRACTOR SHALL BE RESPONSIBLE FOR OBTAINING ALL NECESSARY BUILDING PERMITS AND FOR NOTIFICATION OF ALL AUTHORIZED INSPECTORS, SUPERINTENDENTS, OR PERSONS IN CHARGE OF PRIVATE OR PUBLIC UTILITIES AFFECTED BY HIS OPERATIONS PRIOR TO COMMENCEMENT OF WORK.
18. CONTRACTOR SHALL NOTIFY PROPER AUTHORITIES AT LEAST 48 HOURS BEFORE EXCAVATING IN ANY STREET RIGHT-OF-WAY OR PUBLIC EASEMENTS.
19. ALL EXISTING ITEMS IN THE WAY OF NEW CONSTRUCTION ARE TO BE REMOVED/RELOCATED AS REQUIRED BY THE ARCHITECT WHETHER SHOWN OR NOT.
20. REPAIR ALL DAMAGE TO SITE & VEGETATION ONCE CONSTRUCTION IS COMPLETE - HYDROMULCH ALL AREAS AFFECTED BY CONSTRUCTION (IN BASE BID)
21. ALL SIGNAGE TO BE ADA COMPLIANT AND INSTALLED AS PART OF BASE BID
22. LOCATE ROOM IDENTIFICATION SIGN ON LATCH SIDE OF DOOR SIGNAGE: SHALL BE LAMINATED PLASTIC W/ 5/8" HIGH UPPER CASE LETTERING & GRADE 2 BRAILLE W/CONTRASTING BACKGROUND & 1/32" RAISED CHARACTERS.
23. AT ACCESSIBLE FIXTURE, FLUSH LEVER ALWAYS POINTS TOWARD WIDE SIDE OF TOILET SPACE. FLUSH LEVER SHALL BE NO HIGHER THAN 44" A.F.F.
24. GOOSENECK FAUCET WITH LEVER OPERATED HANDLES
25. INSULATE EXPOSED HOT WATER AND DRAIN PIPES UNDER LAVATORY.
26. WALL AREA WITHIN 2'-0" OF DOOR FRAME AND FULL HEIGHT OF DOOR SHALL BE RESERVED FOR INSTALLATION OF MECHANICAL & ELECTRICAL DEVICES.
27. SPOUT SHALL BE AT FRONT OF THE UNIT AND SHALL DIRECT THE WATER FLOW IN A TRAJECTORY THAT IS PARALLEL OR NEARLY PARALLEL TO THE FRONT OF THE UNIT. THE SPOUT SHALL PROVIDE A FLOW OF WATER AT LEAST 4" HIGH.
28. CLEAR SPACE BETWEEN BOTTOM OF APRON & FLOOR TO BE AT LEAST 27" HIGH, 30" WIDE AND 17" TO 19" DEEP. ALSO PROVIDE 30"X48" MIN. CLEAR FLOOR SPACE.
29. COORDINATE RECEPTACLES W/ COUNTERTOP AND BACKSPLASH.
30. ALL HANDRAILS TO HAVE A CONTINUOUS GRIP & BE SECURE IN THEIR FITTINGS. HANDRAILS SHALL BE 1-1/4" & HAVE 1-1/2" CLEAR SPACE BETWEEN WALL AND BAR W/ SMOOTH ROUND ENDS.
31. AT ALL PULL SIDE OF DOORS THERE SHALL BE A MINIMUM CLEARANCE OF 18" FROM THE STRIKE TO THE NEAREST PERPENDICULAR WALL OR PROTRUDING OBJECT.
32. AT ALL PUSH SIDES OF DOORS WITH A CLOSURE AND A LATCH THERE SHALL BE A MINIMUM CLEARANCE OF 12" FROM THE STRIKE TO THE NEAREST PERPENDICULAR WALL OR PROTRUDING OBJECT.
33. ALL DOORS WITH CLOSURES ARE TO BE ADJUSTED TO HAVE A 3 SECOND SWEEP AT AN OPEN POSITION OF 70 DEGREES. THE FORCE TO OPEN DOORS SHALL NOT EXCEED 5 LBF.
34. SIGNS ON DOUBLE LEAF DOORS TO BE MOUNTED 60" A.F.F. TO THE CENTERLINE OF THE SIGN. MOUNTING POSITION OF SUCH A SIGN SHALL BE SO A PERSON MAY APPROACH WITHIN 3" OF SIGN WITHOUT ENCOUNTERING ANY PROTRUDING OBJECTS OR STANDING WITHIN THE SWING OF THE DOOR.

1 NOTES

PROFESSIONAL SEAL

REGISTERED ARCHITECT JUSTIN E. MYERS 24640 STATE OF TEXAS

LOGO/CONTACT

martinez ARCHITECTS

Martinez Architect, LP
900 Rockmead, Suite 250
Houston, Texas 77339
281.346.7371

DESIGN TEAM

Architectural
Martinez Architects

Civil Engineer
Maverick Engineering

Structural
Matrix Structural engineers

ME/P/T
DBR

Landscape Architect
KDC Associates

FIRE STATION #11

CITY OF MIDLAND
6600 BRIARWOOD AVE
MIDLAND, TX 79707

PROJECT No: **MA 18017**
DATE: **16-JAN-2020**

ISSUE

100% DESIGN DEVELOPMENT 22-MAY-2019
75% CONSTRUCTION DOCUMENT 26-JUN-2019
100% ISSUE FOR PERMIT 30-JUL-2019
100% ISSUE FOR APPROVAL TO BID 16-JAN-2020

GENERAL NOTES

G001

4.1340

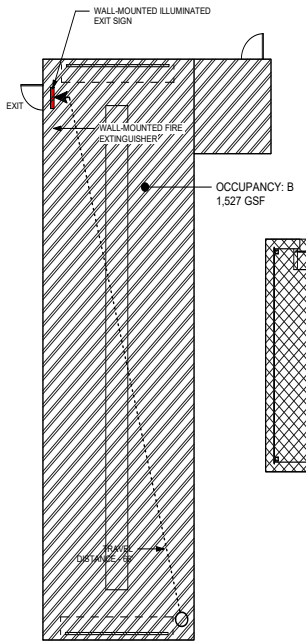

4 WASH BAY CODE ANALYSIS
SCALE: 1/8" = 1'-0"

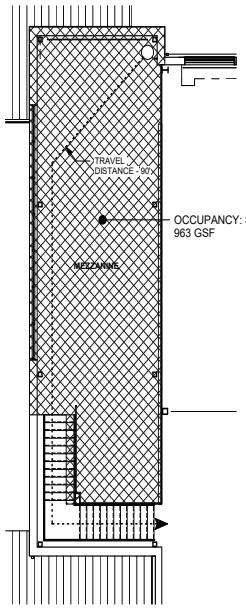

3 FIRE STATION MEZZANINE
SCALE: 1/8" = 1'-0"

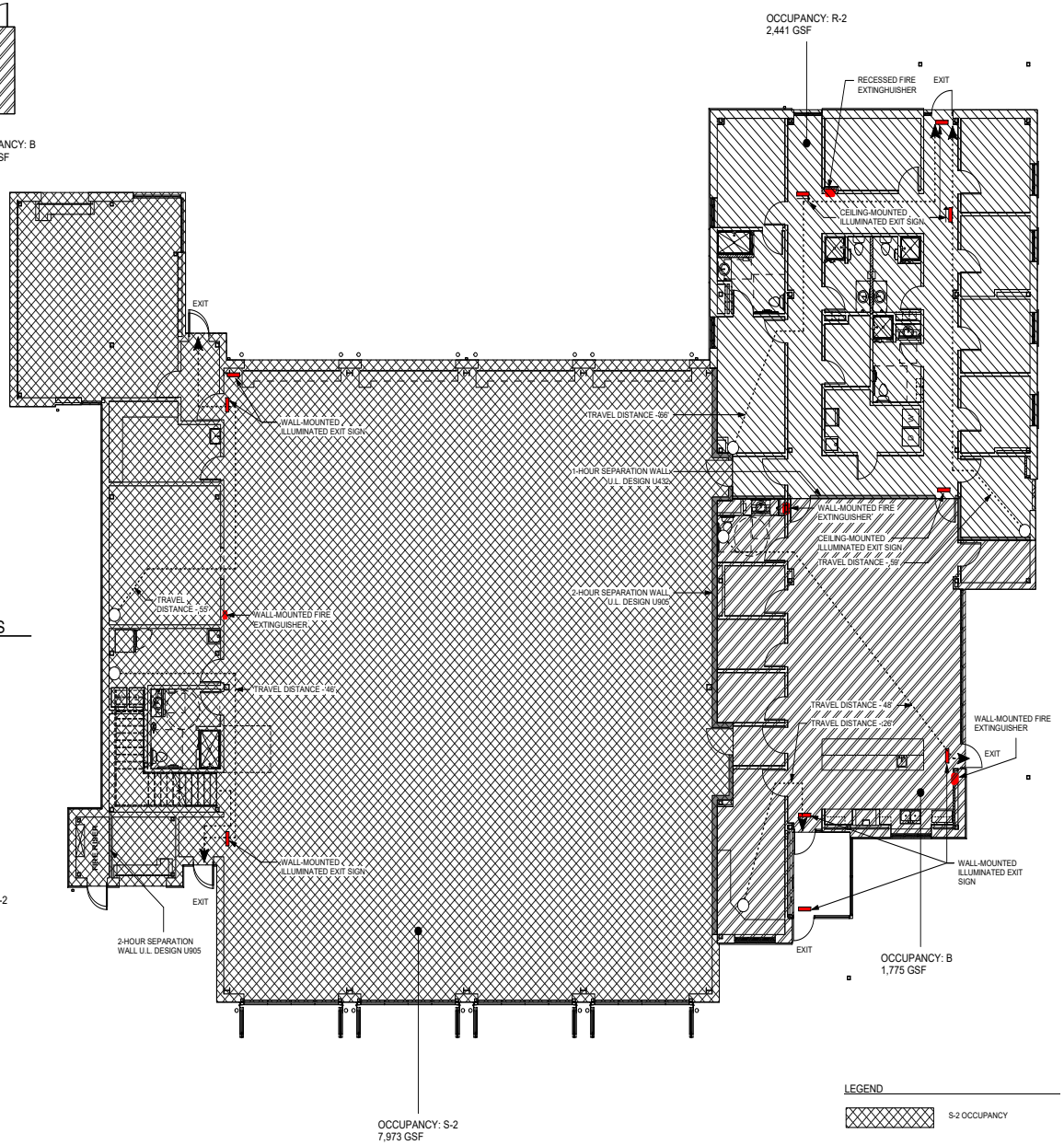

2 LEVEL 1
SCALE: 1/8" = 1'-0"

LEGEND

- S-2 OCCUPANCY
- R-2 OCCUPANCY
- B OCCUPANCY
- FIRE RATED PARTITION

JURISDICTION: CITY OF MIDLAND

OWNER: CITY OF MIDLAND, TEXAS

ADDRESS: 6600 BRIARWOOD AVE
MIDLAND, TX 79707

LEGAL DESCRIPTION: LOT 1, BLOCK 1, LLANO COUNTRY

TDL&R REGISTRATION: TABS2019018185

DESCRIPTION: 1-STORY FIRE STATION (12,289 GSF)
1-STORY WASH BAY BUILDING (1,527 GSF)

CODE: 2018 INTERNATIONAL BUILDING CODE

OTHER APPLICABLE CODES: TEXAS ACCESSIBILITY STANDARDS OF THE ARCHITECTURAL BARRIERS ACT, ARTICLE 9102, TEXAS CIVIL STATUTES, AND THE AMERICANS WITH DISABILITIES ACT

BUILDING CONSTRUCTION TYPE: II-B (601)
REQ'D. FIRE RESISTANCE IN MINUTES (TABLE 601):

STRUCTURAL FRAME	-
INT/EXT BEARING WALLS	-
INT/EXT NONBEARING WALLS	-
FLOOR CONSTRUCTION	-
ROOF CONSTRUCTION	-
SPRINKLED CORRIDORS	
CORRIDOR WALLS	-
CORRIDOR DOORS	-
FIRE BARRIER	60 MIN.
RISER ROOM	60 MIN.

BUILDING HEIGHT AND AREA LIMITATIONS:

TOTAL BUILDING AREA (FIRE STATION)	12,289 SF
TOTAL BUILDING AREA (WASH BAY)	1,527 SF
ALLOWABLE AREA (PER TABLE 503)	16,000 SF
R-2 IS MOST STRINGENT OCCUPANCY AREA LIMITATION	
TOTAL HEIGHT (503.1)	28'-0"
MAXIMUM HEIGHT (503.1)	55'-0"

MAXIMUM OCCUPANT LOADS (1004.1.1):

WORK AREA	(B OCCUPANCY)	100 GROSS SF / OCCUPANT
APPARATUS AREA (S-2 OCCUPANCY)		500 GROSS SF / OCCUPANT
DORMS	(R-2 OCCUPANCY)	200 SF / OCCUPANT

PROJECT OCCUPANT TOTAL LOADS:

FIRE STATION:	54
WASH BAY:	17

RE: OCCUPANCY LOAD CALCULATIONS ON SHEET G003

EGRESS:
FACILITY SHALL HAVE MORE THAN THE REQUIRED MEANS OF EGRESS FOR THE FACILITY PER SECTION 1015.

TRAVEL DISTANCES SHALL NOT EXCEED 250' (R OCCUPANCY), 300' (B OCCUPANCY) AND 400' (S-2 OCCUPANCY) FROM ANY GIVEN SPACE TO AN EXIT (1016.1).

DEAD-END CORRIDORS SHALL NOT EXCEED 50'-0" (1018.4), EXCEPTION 1)

ALL EXIT DOORS SHALL BE 34" WIDE CLEAR MIN. AND SWING IN THE DIRECTION OF TRAVEL.

EGRESS WIDTH:
ALL EGRESS PASSAGE WIDTHS SHALL BE GREATER THAN 0.20 X OCCUPANT LOAD (1005.3.2)
REQUIRED EGRESS WIDTH: 0.20 x 48 OCCUPANTS = 10.8"
PROVIDED EGRESS WIDTH: 61"

FIRE PROTECTION:
- AUTOMATIC FIRE SPRINKLER SYSTEM PROVIDED
- AUTOMATIC FIRE ALARM SYSTEM PROVIDED, PER NFPA 72
- THE FACILITY SHALL BE EQUIPPED THROUGHOUT WITH FIRE ALARM MONITORING DEVICES, AND SHALL BE MONITORED 24/7.
- FIRE ALARM SUBCONTRACTOR SHALL SUBMIT DESIGN/PLANS FOR REVIEW.
- CONTRACTOR TO COORDINATE SMOKE DETECTORS, AUDIO/VISUAL NOTIFICATION DEVICES, HEAT DETECTORS, ETC. FOR FULL SYSTEM COMPLIANCE WITH FIRE MARSHAL.
- FIRE ALARM SUBCONTRACTOR SHALL PROVIDE A COMPLETE DESIGN OF THE FIRE ALARM SYSTEM FOR REVIEW AND APPROVAL BY THE ENGINEER OF RECORD.
- FIRE ALARM SUBCONTRACTOR SHALL PAY AND ACQUIRE ALL NECESSARY APPROVALS AND PERMITS FROM AUTHORITY HAVING JURISDICTION.

FIRE FLOW:
GPM REQUIRED FOR 13,816 S.F. FACILITY = 2,250 GPM
75% REDUCTION FOR AUTOMATIC FIRE SPRINKLER SYSTEM = 562 GPM
PER IFC SECTION B105.2, MINIMUM FIRE FLOW = 1,500 GPM

FIRE PARTITION IDENTIFICATION:
INSTALL STENCILED LETTERING 2" IN HEIGHT SPACED EVERY 12", AT ALL FIRE RATED PARTITIONS ABOVE CEILING.

1 CODE ANALYSIS (IBC 2018)

PROFESSIONAL SEAL

REGISTERED ARCHITECT JUSTIN E. MYERS 24640 STATE OF TEXAS

LOGO/CONTACT

martinez ARCHITECTS

Martinez Architect, LP
900 Rockmead, Suite 250
Houston, Texas 77339
281.346.7371

DESIGN TEAM

Architectural
Martinez Architects

Civil Engineer
Maverick Engineering

Structural
Matrix Structural engineers

MEP/FP
DBR

Landscape Architect
KDC Associates

FIRE STATION #11

CITY OF MIDLAND
6600 BRIARWOOD AVE
MIDLAND, TX 79707

PROJECT No: MA 18017
DATE: 16-JAN-2020

ISSUE

100% DESIGN DEVELOPMENT 22-MAY-2019
75% CONSTRUCTION DOCUMENT 26-JUN-2019
100% ISSUE FOR PERMIT 30-JUL-2019
100% ISSUE FOR APPROVAL TO BID 16-JAN-2020

BUILDING CODE ANALYSIS

G002

4.1341

Design No. U905
BXUV.U905
Fire Resistance Ratings - ANSI/UL 263

Design/System/Construction/Assembly Usage Disclaimer

• Authorities Having Jurisdiction should be consulted in all cases as to the particular requirements covering the installation and use of UL
Certified products, equipment, system, devices, and materials.
• Authorities Having Jurisdiction should be consulted before construction.
• Fire resistance assemblies and products are developed by the design submitter and have been investigated by UL for compliance with
applicable requirements. The published information cannot always address every construction nuance encountered in the field.
• When field issues arise, it is recommended the first contact for assistance be the technical service staff provided by the product
manufacturer noted for the design. Users of fire resistance assemblies are advised to consult the general Guide Information for each
product category and each group of assemblies. The Guide Information includes specifics concerning alternate materials and alternate
methods of construction.
• Only products which bear UL's Mark are considered Certified.

BXUV - Fire Resistance Ratings - ANSI/UL 263
BXUV7 - Fire Resistance Ratings - CAN/ULC-S101 Certified for Canada

See General Information for Fire-resistance Ratings - ANSI/UL 263
See General Information for Fire Resistance Ratings - CAN/ULC-S101 Certified for Canada

Design No. U905
March 11, 2016
Bearing Wall Rating — 2 HR.
Nonbearing Wall Rating — 2 HR

This design was evaluated using a load design method other than the Limit States Design Method (e.g., Working Stress Design Method). For jurisdictions employing the Limit States Design Method, such as Canada, a load restriction factor shall be used — See Guide BXUV or BXUV7

* Indicates such products shall bear the UL or cUL Certification Mark for jurisdictions employing the UL or cUL Certification (such as Canada), respectively.

HORIZONTAL SECTION

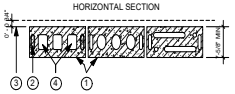

1. Concrete Blocks* — Various designs. Classification D-2 (2 hr).
See Concrete Blocks category for list of eligible manufacturers.

2. Mortar — Blocks laid in full bed of mortar, nom. 3/8 in. thick, of not less than 2-1/4 and not more than 3-1/2 parts of clean sharp sand to 1 part Portland cement (proportioned by volume) and not more than 50 percent hydrated lime (by cement volume). Vertical joints staggered.

3. Portland Cement Stucco or Gypsum Plaster — Add 1/2 hr to classification if used. Where combustible members are framed in wall, plaster or stucco must be applied on the face opposite framing to achieve a max. Classification of 1-1/2 hr. Attached to concrete blocks (Item 1).

4. Loose Masonry Fill — If all core spaces are filled with loose dry expanded slag, expanded clay or shale (Rotary Kiln Process), water repellant vermiculite masonry fill insulation, or silicone treated perlite loose fill insulation add 2 hr to classification.

5. Foamed Plastic* — (Optional-Not Shown) — 1-1/2 in. thick max, 4 ft wide sheathing attached to concrete blocks (Item 1).

ATLAS ROOFING CORP — "EnergyShield Pro Wall Insulation" and "EnergyShield Pro 2 Wall Insulation"

CARLISLE COATINGS & WATERPROOFING INC — Type R2+ Sheath

FIRESTONE BUILDING PRODUCTS CO L L C — "Enverge™ CI Foil Exterior Wall Insulation" and "Enverge™ CI Glass Exterior Wall Insulation"

HUNTER PANELS — Types Xci-Class A, Xci 286

RMAX OPERATING L L C — "TSX-8500", "TSX-8510", "Thermasheath-XP", "ECOMAXci", "Thermasheath-3", "Durasheath-3"

THE DOW CHEMICAL CO — Types Thermax Sheathing, Thermax Light Duty Insulation, Thermax Heavy Duty Insulation, Thermax Metal Building Board, Thermax White Finish Insulation, Thermax ci Exterior Insulation, Thermax XARMOR ci Exterior Insulation, Thermax IH Insulation, Thermax Plus Liner Panel, Thermax Heavy Duty Plus (HDP) and TUFF-R™ ci Insulation

5A. **Building Units —** As an alternate to Items 5, min. 1-in thick polyisocyanurate composite foamed plastic insulation boards, nom. 48 by 48 or 96 in.

RMAX OPERATING L L C — "Thermasheath-SI", "ECOBASEci", "ThermaBase-CI"

*** Indicates such products shall bear the UL or cUL Certification Mark for jurisdictions employing the UL or cUL Certification (such as Canada), respectively.**

The appearance of a company's name or product in this database does not in itself assure that products so identified have been manufactured under UL's Follow-Up Service. Only those products bearing the UL Mark should be considered to be Certified and covered under UL's Follow-Up Service. Always look for the Mark on the product.
UL permits the reproduction of the material contained in the Online Certification Directory subject to the following conditions: 1. The Guide Information, Assemblies, Constructions, Designs, Systems, and/or Certifications (files) must be presented in their entirety and in a non-misleading manner, without any manipulation of the data (or drawings). 2. The statement "Reprinted from the Online Certifications Directory with permission from UL" must appear adjacent to the extracted material. In addition, the reprinted material must include a copyright notice in the following format: "© 2016 UL LLC".

2 UL ASSEMBLY - U905

Design No. U432

APRIL 19, 2017

Bearing Wall Rating - 1Hr (See Item 2)

Nonbearing Wall Rating - 1 Hr (See Item 2)

This design was evaluated using a load design method other than the Limit States Design Method (e.g., Working Stress Design Method). For jurisdictions employing the Limit States Design Methods, such as Canada, a load restriction factor shall be used - See Guide BXUV or BXUV7

***Indicates such products shall bear the UL or cUL Certification Mark for Jurisdictions employing the UL or cUL Certification (such as Canada), respectively.**

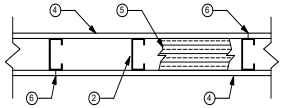

1. **Floor and Ceiling Runners** - (Not shown) - Channel shaped, fabricated from min 0.0329 in. thick, bare metal thickness (No. 20 MSG) corrosion-protected steel, that provides a sound structural connection between steel studs and adjacent assemblies such as floors, ceilings and/or other walls. Attached to floor and ceiling assemblies with steel fasteners spaces not greater than 24 in. OC.
2. **Steel Studs -** Min 0.0329 in. thick, bare metal thickness (No. 20 MSG) corrosion-protected steel studs, min 3-1/2 in. wide, cold formed, designed in accordance with the current edition of the Specification for the Design of Cold-Formed Steel Structural Members by the American Iron and Steel Institute (AISI). All design details enhancing the structural integrity of the wall assembly, including the axial design load of the studs, shall be as specified by the steel stud design and/or producer, and shall meet the requirements of all applicable local code agencies. The max stud spacing shall not exceed 24 in. OC. Studs attached to floor and ceiling runners with 1/2 in. long Type S-12 steel screws on both sides of the studs or by welders or bolted connections designed in accordance with the AISI specifications (bearing walls). Studs to be cut 1/2 to 3/4 in. less than assembly height and friction-fitted into floor and ceiling runners (nonbearing walls).
3. **Lateral Support Members** - (Not shown) - Where required for lateral support of studs, support shall be provided by means of steel straps, channels or other similar means as specified in the design of a particular steel stud wall system.
4. **Gypsum Board* -** Nom 5/8 in. thick, 24 to 54 in. wide gypsum panels, attached vertically or horizontally with 1-1/4 in. long Type S-12 steel screws. When applies vertically to studs, joints centered over studs are staggered one stud cavity on opposite sides of studs and attached with screws spaced 8 in. OC along the edges and 12 in. OC in the field. When applied horizontally to studs, no distance requirements on joints on opposite sides of studs and attached with screws spaced 8 in. OC along the edges and the field. When used in widths other than 48 in., gypsum panels to be installed horizontally. UNITED STATES GYPSUM CO - Type FRX-G
5. **Batts and Blankets* -** (Optional, not shows) - Placed in stud cavities, any glass fiber or mineral wool insulation bearing the UL Classification Marking as to Surface Burning Characteristics and/or Fire Resistance. See Batts and Blankets (BKNV or BZJZ) Categories for names of Classified companies.
6. **Joint Tape and Compound -** Vinyl or casein, dry or premixed join compound applied in two coats to joints and screw heads. Paper tape, nom 2 in. wide, embedded in first layer of compound over all joint. Paper tape and joint compound may be omitted when gypsum boards are supplied with square edges.
7. **Caulking and Sealants* -** (Optional, not shown) - A bead of acoustical sealant applied around the partition perimeter for sound control
UNITED STATES GYPSUM CO - Type AS

***Indicates such products shall bear the UL or cUL Certification Mark for jurisdictions employing the UL or cUL Certification (such as Canada), respectively.**

Last Updated on 2017-04-19

1 UL ASSEMBLY - U432

OCCUPANCY CALCULATIONS

Name	Number	Level	Area	Occupancy Factor	Occupant Load
ENTRY	101	LEVEL 1	96 SF	100	1
OFFICE	102	LEVEL 1	193 SF	100	2
AIR LOCK	103	LEVEL 1	39 SF	0	0
PANT. 1	104	LEVEL 1	64 SF	100	1
PANT. 2	105	LEVEL 1	64 SF	100	1
PANT. 3	106	LEVEL 1	57 SF	100	1
ADA RR	107	LEVEL 1	78 SF	100	1
KITCHEN	108	LEVEL 1	362 SF	100	4
DINING ROOM	109	LEVEL 1	241 SF	100	3
PATIO	110	LEVEL 1	223 SF	0	0
DAY ROOM	111	LEVEL 1	457 SF	100	5
ELEC.	112	LEVEL 1	56 SF	100	1
AIR LOCK	113	LEVEL 1	40 SF	0	0
DORM 8	114	LEVEL 1	171 SF	200	1
RR	115	LEVEL 1	79 SF	200	1
DORM 7	116	LEVEL 1	139 SF	200	1
DORM 6	117	LEVEL 1	131 SF	200	1
DORM 5	118	LEVEL 1	123 SF	200	1
DORM 4	119	LEVEL 1	101 SF	200	1
DORM 3	120	LEVEL 1	97 SF	200	1
DORM 2	121	LEVEL 1	98 SF	200	1
DORM 1	122	LEVEL 1	106 SF	200	1
UTILITY	123	LEVEL 1	99 SF	200	1
I.T.	124	LEVEL 1	57 SF	200	1
RR	125	LEVEL 1	64 SF	200	1
RR	126	LEVEL 1	57 SF	200	1
ADA RR	127	LEVEL 1	63 SF	200	1
HALLWAY	128	LEVEL 1	647 SF	0	0
APPARATUS BAYS	129	LEVEL 1	5852 SF	500	12
YARD STRG.	130	LEVEL 1	73 SF	500	1
FIRE RISER	131	LEVEL 1	38 SF	500	1
DECON.	132	LEVEL 1	103 SF	500	1
UTILITY	133	LEVEL 1	139 SF	500	1
GEAR ROOM	134	LEVEL 1	294 SF	500	1
SHOP	135	LEVEL 1	152 SF	500	1
AIR LOCK	136	LEVEL 1	58 SF	0	0
EXCERCISE	137	LEVEL 1	606 SF	500	2
WASH BAY	140	Not Placed	0 SF	100	0
MEZZANINE	201	MEZZANINE	849 SF	500	2
			12168 SF		56

PROFESSIONAL SEAL

REGISTERED ARCHITECT JUSTIN E. MARTINEZ 24640 STATE OF TEXAS

LOGO/CONTACT

martinez ARCHITECTS

Martinez Architect, LP
900 Rockmead, Suite 250
Houston, Texas 77339
281.346.7371

DESIGN TEAM

Architectural
Martinez Architects

Civil Engineer
Maverick Engineering

Structural
Matrix Structural engineers

M/E/P/T
DBR

Landscape Architect
KDC Associates

FIRE STATION #11

CITY OF MIDLAND
6600 BRIARWOOD AVE
MIDLAND, TX 79707

PROJECT No: **MA 18017**
DATE: **16-JAN-2020**

ISSUE

100% DESIGN DEVELOPMENT
22-MAY-2019

75% CONSTRUCTION DOCUMENT
26-JUN-2019

100% ISSUE FOR PERMIT
30-JUL-2019

100% ISSUE FOR APPROVAL TO BID
16-JAN-2020

BUILDING CODE ANALYSIS

G003

4.1342

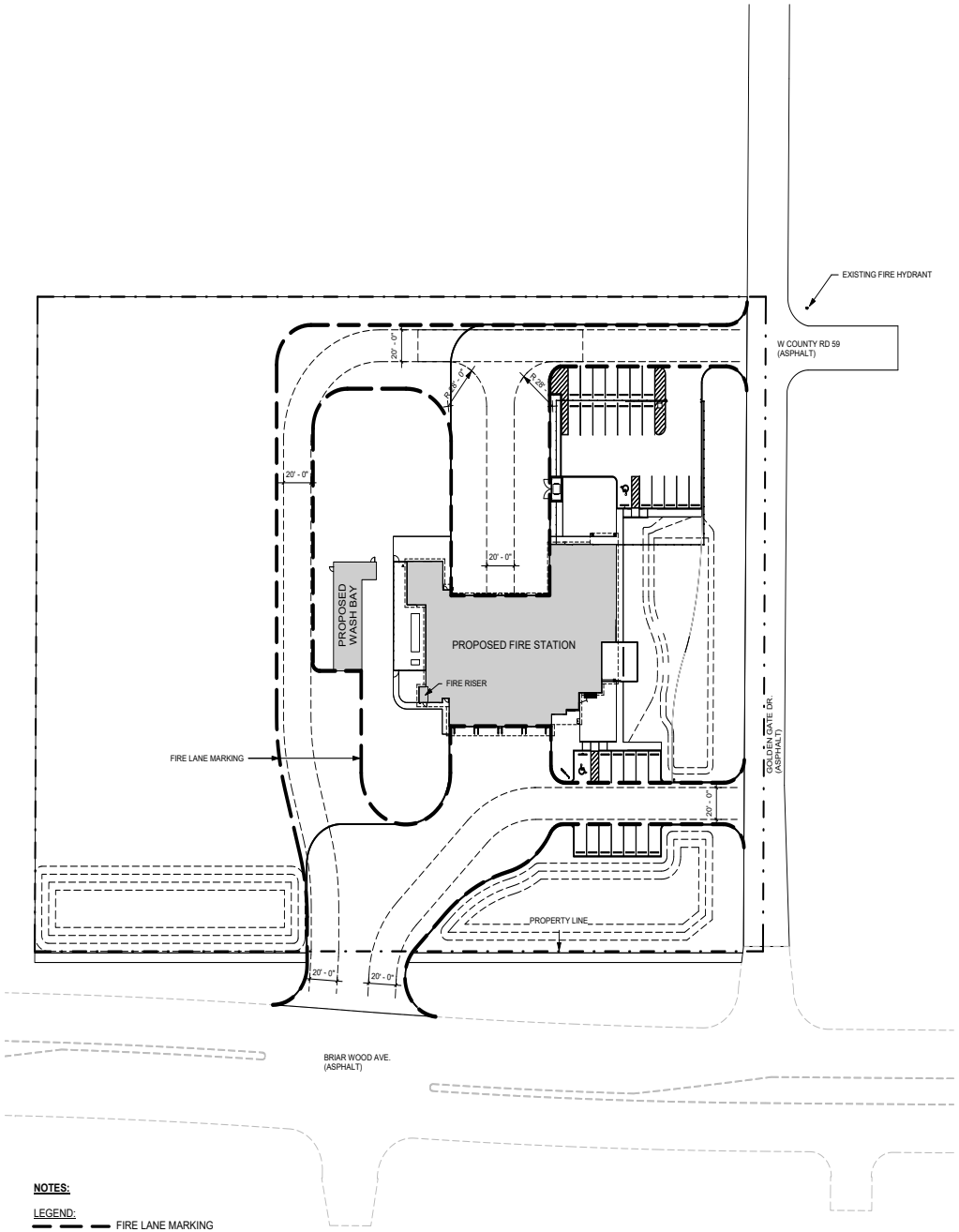

NOTES:

LEGEND:

FIRE LANE MARKING

PARKING REQUIREMENTS:
COMMERCIAL USE (NOT LISTED ABOVE): ONE SPACE FOR EACH TWO EMPLOYEES PER MAXIMUM SHIFT OR ONE SPACE PER EACH 1,000 SQUARE FEET OF FLOOR AREA, WHICHEVER IS GREATER

PARKING REQUIRED BY CODE: 12
PARKING PROVIDED: 33

3 SITE CODE ANALYSIS PLAN
SCALE: 1" = 40'-0"

FIRE LANE LAYOUT:

1. ACCESS WITHIN 150 FT. OF ALL PORTIONS OF THE FACILITY SHALL BE MAINTAINED ALONG AN UNOBSTRUCTED PATHWAY AROUND THE EXTERNAL WALL OF THE STRUCTURE. ACCESS SHALL NOT BE GREATER THAN 15' FROM BUILDINGS.
2. A FIRE APPARATUS ACCESS ROAD SHALL BE PROVIDED IF REQUIRED. ACCESS ROAD SHALL BE CONSTRUCTED AND MAINTAINED IN ACCORDANCE WITH APPENDIX D OF THE 2018 IFC.
   a. ACCESS ROAD SHALL BE LOCATED ADJACENT TO THE STRUCTURE A MINIMUM OF 15' AND A MAXIMUM OF 30' AND SHALL BE POSITIONED PARALLEL TO ONE ENTIRE SIDE OF THE BUILDING.
   b. INTERIOR RADIUS SHALL NOT BE LESS THAN 25'.
   c. ACCESS TO PROPERTY RADIUS SHALL NOT BE LESS THAN 15'.
3. A FIRE APPARATUS ACCESS ROAD SHALL BE PROVIDED WITH APPROPRIATE IDENTIFICATION.
   a. A 24' WIDE UNOBSTRUCTED ACCESS ROAD SHALL BE PROVIDED FOR STRUCTURES LESS THAN 30' IN HEIGHT.
   b. A 26' WIDE UNOBSTRUCTED ACCESS ROAD SHALL BE PROVIDED FOR STRUCTURES GREATER THAN 30' IN HEIGHT.
   c. ACCESS ROADS GREATER THAN 150' SHALL BE PROVIDED WITH A TURNAROUND IN ACCORDANCE WITH TABLE D103.3.

FIRE LANE SIGN:

1. AT THE BEGINNING AND END OF THE FIRE LANE, THE SIGN SHALL HAVE A SINGLE HEADED ARROW POINTING IN THE DIRECTION THE REGULATION IS IN EFFECT. THE INTERMEDIATE SIGNS SHALL HAVE DOUBLE HEADED ARROWS POINTING IN BOTH DIRECTIONS.
2. THE MAXIMUM SPACING OF THE SIGNS SHALL BE 75', CONTINGENT UPON TRAFFIC ENGINEERING'S REVIEW AND APPROVAL.
3. SIGNS TO BE POSTED ON BOTH SIDES AS A FIRE LANE.
4. THE SIGNS SHALL BE SET AT AN ANGLE OF NOT LESS THAT 30° NOR MORE THAN 45° WITH THE CURB OR LINE OF TRAFFIC FLOW.
5. THE CLEARANCE TO THE BOTTOM OF THE SIGN SHALL BE 7'. THERE SHALL BE NO OTHER SIGNS ATTACHED TO THE SIGN OR THE SIGN POLE.
6. THE SIGN PLATE SHALL BE A MINIMUM OF 12"x18" WITH A THICKNESS OF 0.80".

FIRE LANE MARKING AT CURB:

1. PAINT CURB RED FROM TOP SEAM OF CURB TO A POINT EVEN WITH DRIVING SURFACE IN 4" WHITE LETTERS AT 25' INTERVALS
   - "FIRE LANE - NO PARKING - TOW AWAY ZONE"
2. AT HORIZONTAL SURFACES WITH NO CURB PAINT 6" WIDE RED STRIPE WITH 4" WHITE LETTERS AT 25' INTERVALS
   - "FIRE LANE - NO PARKING - TOW AWAY ZONE"

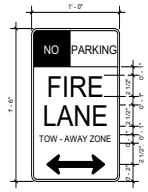

FIRE DEPARTMENT CONNECTION SIGN:

1. FIRE DEPARTMENT CONNECTION SHALL BE INSTALLED WITHIN 150' OF FIRE HYDRANT AND INSTALLED CLEARLY VISIBLE FROM A PUBLIC ACCESS STREET
2. SIGN PLATE SHALL BE MADE OF RUST-FREE ALUMINUM WITH UV RESISTANT, TWO-SIDED POLYESTER COATING.
3. THE SIGN PLATE SHALL BE A MINIMUM OF 12"x14" WITH A THICKNESS OF 0.40".
4. FDC LETTERING TO BE 6" HIGH
5. ADDRESS LETTERING TO BE 1.25" HIGH

1 FIRE PROTECTION LAYOUT AND IDENTIFICATION

4.1343

PROFESSIONAL SEAL

REGISTERED ARCHITECT
JUSTIN E. MYERS
24640
STATE OF TEXAS

LOGO/CONTACT

martinez ARCHITECTS

Martinez Architect, LP
900 Rockmead, Suite 250
Houston, Texas 77339
281.346.7371

DESIGN TEAM

Architectural
Martinez Architects

Civil Engineer
Maverick Engineering

Structural
Matrix Structural engineers

M/E/P/T
DBR

Landscape Architect
KDC Associates

FIRE STATION #11

CITY OF MIDLAND
6600 BRIARWOOD AVE
MIDLAND, TX 79707

PROJECT No: **MA 18017**
DATE: **16-JAN-2020**

ISSUE

100% DESIGN DEVELOPMENT
22-MAY-2019

75% CONSTRUCTION DOCUMENT
26-JUN-2019

100% ISSUE FOR PERMIT
30-JUL-2019

100% ISSUE FOR APPROVAL TO BID
16-JAN-2020

SITE CODE ANALYSIS

G004

FIRE STATION 11

LOT 1, BLOCK 1 OUT OF LLANO COUNTRY ADDITION,

AN ADDITION TO THE CITY OF MIDLAND, MIDLAND COUNTY, TEXAS.

CIVIL CONSTRUCTION PLANS

ENGINEER'S GENERAL NOTES:

1. THESE PLANS ARE NOT TO BE USED FOR CONSTRUCTION PURPOSES UNLESS THE APPROVAL BLOCK HAS BEEN SIGNED BY THE APPROPRIATE AGENCIES. ALL WORK IS TO CONFORM TO THE CURRENT STANDARD SPECIFICATIONS, DETAILS AND SUPPLEMENTAL INFORMATION OF SAID AGENCY.
2. A THOROUGH ATTEMPT HAS BEEN MADE TO SHOW THE LOCATIONS OF ALL UNDERGROUND OBSTRUCTIONS AND UTILITY LINES IN THE WORK AREA. HOWEVER, THE CONTRACTOR IS RESPONSIBLE FOR ANY DAMAGE TO OBSTRUCTIONS AND UTILITY LINES ENCOUNTERED DURING CONSTRUCTION AND IS TO DETERMINE THE EXACT LOCATION OF ALL UTILITIES IN THE AREA.
3. THE ENGINEER MAKES NO REPRESENTATION OR GUARANTEE REGARDING EARTHWORK QUANTITIES OR THAT THE EARTHWORK FOR THIS PROJECT WILL BALANCE. SUCH A GUARANTEE IS NOT POSSIBLE DUE TO THE VARYING FIELD CONDITIONS, CHANGING SOIL TYPES, ALLOWABLE CONSTRUCTION TOLERANCES, AND CONSTRUCTION METHODS THAT ARE BEYOND THE CONTROL OF THE ENGINEER.
4. PRIOR TO BIDDING THE WORK, THE CONTRACTOR IS TO THOROUGHLY INVESTIGATE THE ACTUAL CONDITIONS OF THE SITE AND EARTHWORK QUANTITIES, IF ANY. NO CLAIM IS TO BE MADE AGAINST THE OWNER/DEVELOPER OR ENGINEER FOR ANY EXCESS OR DEFICIENCY IN EARTHWORK QUANTITIES, ACTUAL OR RELATIVE.
5. MAVERICK ENGINEERING MAKES NO REPRESENTATION AS TO THE PRESENCE OF ROCK WITHIN EXCAVATION AREAS. ANY EXCAVATION IS TO BE CONSIDERED UNCLASSIFIED EXCAVATION, AND THE PRESENCE OF ROCK IS ONE OF THE EXISTING CONDITIONS THE CONTRACTOR IS EXPECTED TO FULLY INVESTIGATE PRIOR TO BIDDING THE WORK. NO CLAIM WILL BE MADE AGAINST MAVERICK ENGINEERING OR THE OWNER BASED ON MATERIALS ENCOUNTERED.
6. THE ENGINEER WILL NOT BE RESPONSIBLE FOR CONSTRUCTION MEANS, METHODS, TECHNIQUES, SEQUENCES OR PROCEDURES OR FOR SAFETY PRECAUTIONS / PROGRAMS UTILIZED IN CONNECTION WITH THE WORK. THE ENGINEER IS NOT RESPONSIBLE IF THE CONTRACTOR FAILS TO CARRY OUT THE WORK IN ACCORDANCE WITH THE CONTRACT DOCUMENTS.
7. OWNER/CONTRACTOR IS RESPONSIBLE FOR SURVEY VERIFICATION OF EXISTING HORIZONTAL AND VERTICAL CONDITIONS PRIOR TO START OF CONSTRUCTION. A DEVIATION IN EXISTING CONDITIONS MUST BE BROUGHT TO THE IMMEDIATE ATTENTION OF MAVERICK ENGINEERING, BEFORE CONSTRUCTION STARTS. MAVERICK ENGINEERING WILL NOT BE RESPONSIBLE FOR REMOVAL, REPLACEMENT, OR OTHER MODIFICATIONS THAT MAY BE REQUIRED AS A RESULT OF EXISTING CONDITIONS NOT PROPERLY VERIFIED AND CONFIRMED. SHOULD AN ERROR BE FOUND IN THE HORIZONTAL & VERTICAL CONDITIONS, MAVERICK ENGINEERING WILL BE NOTIFIED AND CONSTRUCTION WILL NOT PROCEED UNTIL REVISIONS AND/OR MODIFICATIONS HAVE BEEN PREPARED AND SUBMITTED BY MAVERICK ENGINEERING.
8. OWNER/CONTRACTOR IS TO HAVE A PROFESSIONAL LAND SURVEYOR VERIFY FINISHED FLOOR ELEVATIONS PRIOR TO PLACING ANY FORM WORK OR CONCRETE. MAVERICK ENGINEERING WILL NOT BE RESPONSIBLE FOR REMOVAL, REPLACEMENT, OR OTHER MODIFICATIONS THAT MAY BE REQUIRED AS A RESULT OF THE FINISHED FLOOR NOT BEING PROPERLY VERIFIED.
9. IT IS THE CONTRACTOR'S RESPONSIBILITY TO COMPLY WITH EPA'S NPDES REGULATIONS 40-CFR-122, AND 40-CFR-123, AND 40-CFR-124 CONCERNING EROSION AND SEDIMENT CONTROL.
10. AN APPROVED GRADING AND DRAINAGE PLAN IS TO BE MAINTAINED ON SITE AT ALL TIMES. THIS IS TO BE MADE AVAILABLE TO INSPECTORS UPON REQUEST.
11. MAVERICK DOES NOT PROVIDE BUILDING FOUNDATION DESIGNS. REFER TO STRUCTURAL PLANS AND / OR GEOTECHNICAL REPORT FOR MATERIAL AND COMPACTION REQUIREMENTS UNDERNEATH BUILDING SLABS / STRUCTURAL FOUNDATIONS. MAKE NOTE IF SAID PLANS CALL FOR ADDITIONAL MATERIALS OR COMPACTION OR SIDEWALK IMMEDIATELY ADJACENT TO THE STRUCTURE / FOUNDATION.

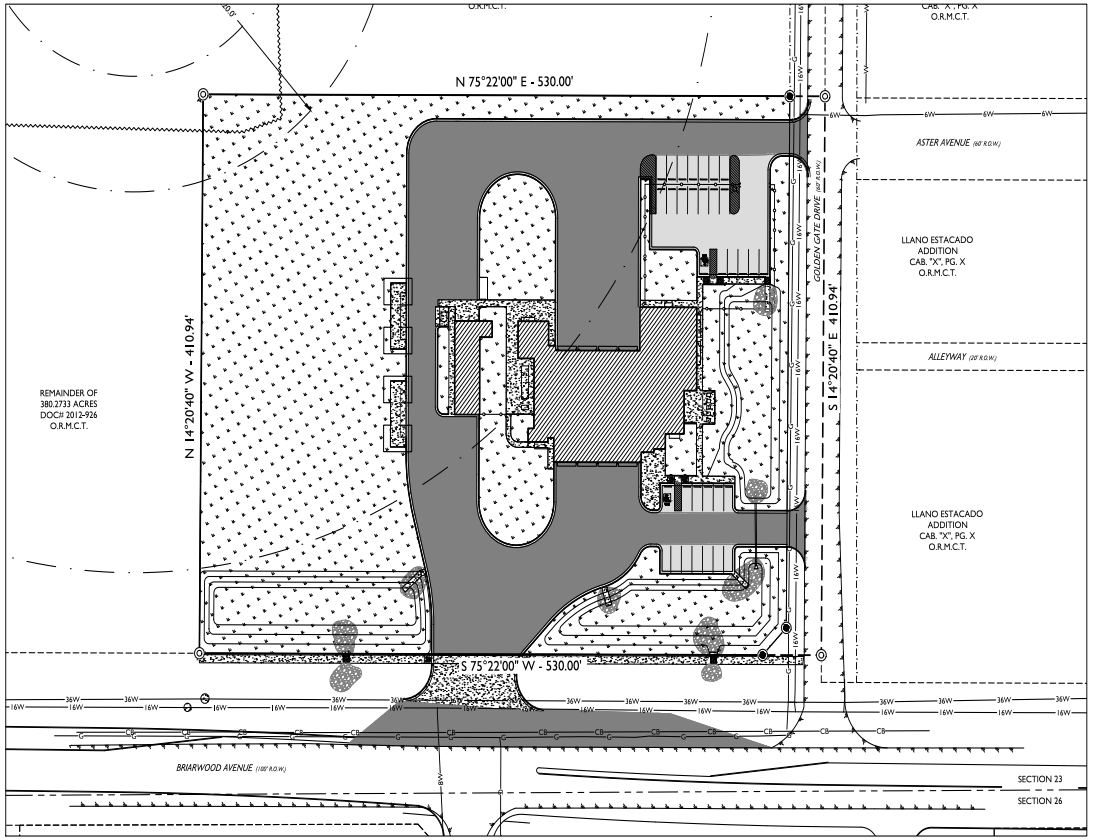

SHEET INDEX:

COVER SHEET	C100
FINAL PLAT	C110
EXISTING SITE TOPOGRAPHY	C111
SWPPP	C120
SWPPP DETAILS	C130
DIMENSION PLAN	C200
PAVING PLAN	C210
PAVING DETAILS	C220
PAVING DETAILS	C221
PAVING DETAILS	C222
GRADING PLAN	C230
DRAINAGE PLAN - PRE VS POST	C240
DRAINAGE PLAN - BASINS	C241
UTILITY PLAN	C300
WATER DETAILS	C310
WATER DETAILS	C311
SEWER DETAILS	C320
BARRICADE DETAILS	C500
SIGN DETAILS	C501

ENGINEER:

ANDREW L. MELLEN, P.E.
MAVERICK ENGINEERING
1909 WEST WALL STREET, STE. K
MIDLAND, TX 79701
TELEPHONE: (432) 262-0999

BENCHMARK:

BEARINGS, DISTANCES AND COORDINATES SHOWN ARE LAMBERT GRID WHICH IS RELATIVE TO THE TEXAS STATE PLANE COORDINATE SYSTEM, TEXAS CENTRAL ZONE, NAD 1983. ELEVATIONS ARE BASED ON GPS OBSERVATIONS CONFORMING TO NAVD 1988.
TEMPORARY BENCHMARK #1:
PK NAIL
N: 10,703,707.20
E: 1,723,106.55
ELEVATION: 2858.10

CONTACT MAVERICK ENGINEERING, LLC. FOR ADDITIONAL BENCHMARKS OR CONTROL STAKING 432-262-0999

VICINITY MAP
N.T.S.

811 Know what's below. Call before you dig.

MAVERICK ENGINEERING
1909 West Wall Street, Suite "K"
Midland, Texas 79701
Tel: (432) 262-0999 Fax: (432) 262-0989
FIRM: F-15089
www.Maverick-Engr.com

NO.	REVISIONS	BY:	APPR.	DATE

DRAWN BY: CLB
CHECKED BY: ALM
APPROVED BY: ALM
DATE: 05/14/2019
JOB: 180218

COVER SHEET
FIRE STATION 11
LOT 01, BLOCK 01, LLANO COUNTRY ADDITION,
AN ADDITION TO THE CITY OF MIDLAND,
MIDLAND COUNTY, TEXAS.

PRELIMINARY REVIEW:

THESE PLANS ARE RELEASED UNDER THE SEAL OF ANDREW L. MELLEN, P.E. #108572 AND MAVERICK ENGINEERING (FIRM # F-15089) ON THIS DAY 05/14/2019, FOR THE PURPOSES OF INTERIM/PRELIMINARY REVIEW. THEY SHALL NOT BE USED FOR THE PURPOSES OF CONSTRUCTION.

SHEET C100 OF 19

4.1344

© COPYRIGHT 2018 ALL RIGHTS RESERVED

P:\2018\180218-MARTINEZ ARCHITECTS-FIRE STATION 11 CUP\3-DRAWINGS\CIVIL CONSTRUCTION PLANS\180218 C100 COVER SHEET.DWG

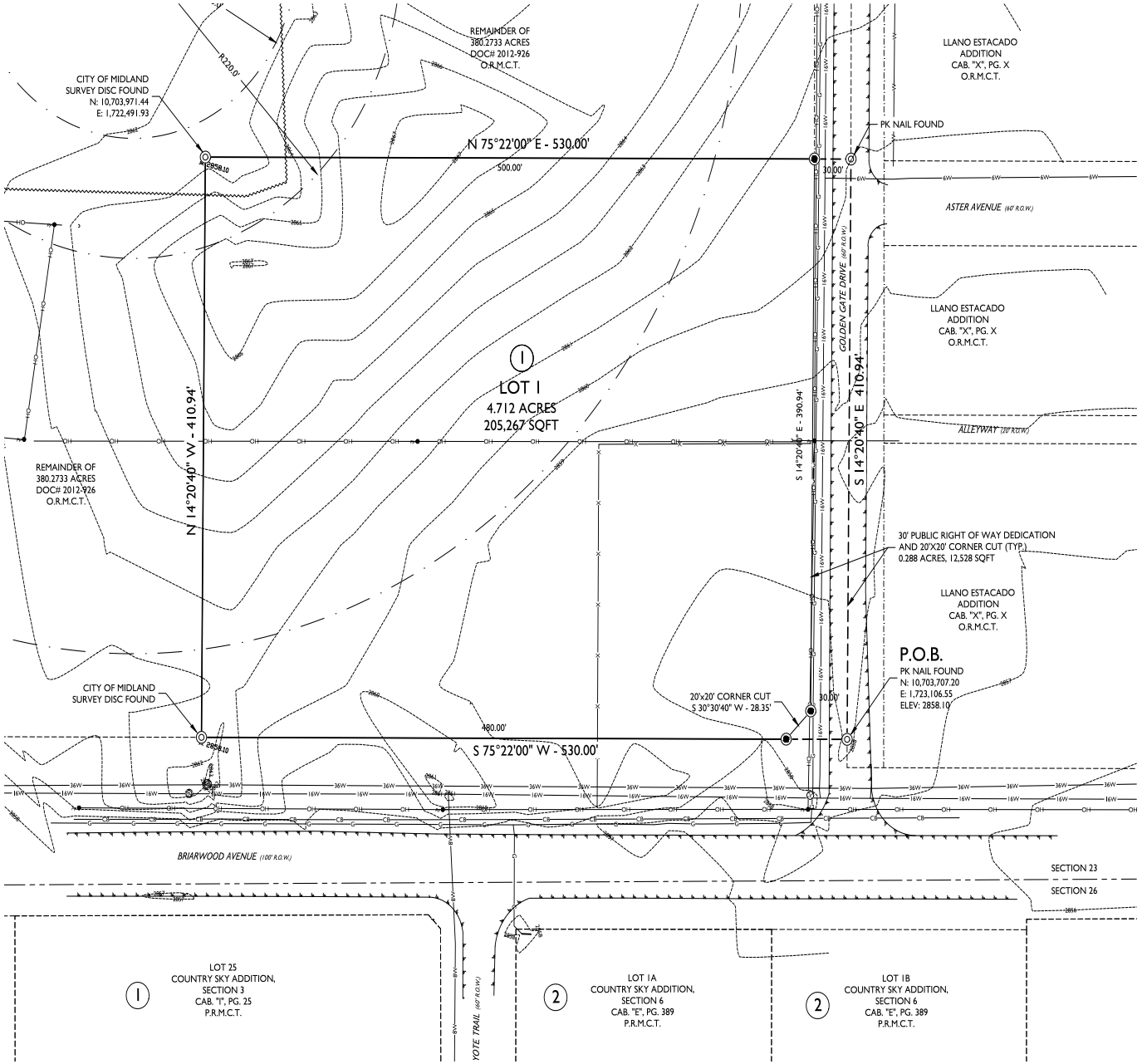

0' 40' 80' 120'

SCALE 1" = 40'

LEGEND

- DENOTES FOUND MONUMENT AS NOTED
- DENOTES SET 1/2" IRON ROD W/PLASTIC CAP MARKED "CTLS"
- DENOTES TEMPORARY BENCHMARK
- DENOTES EXISTING FIRE HYDRANT
- DENOTES EXISTING WATER VALVE
- DENOTES EXISTING MANHOLE
- DENOTES EXISTING GUY ANCHOR
- DENOTES EXISTING POWER POLE
- DENOTES EXISTING CONTOUR
- DENOTES BOUNDARY LINE
- DENOTES SURROUNDING PROPERTY
- DENOTES EXISTING FLOODWAY
- DENOTES EDGE OF ASPHALT
- DENOTES EXISTING OVERHEAD ELECTRIC LINE
- DENOTES EXISTING FENCE
- DENOTES EXISTING GAS LINE
- DENOTES EXISTING UNDERGROUND CABLE LINE
- DENOTES EXISTING WATER LINE
- DENOTES EXISTING 6" WATER LINE
- DENOTES EXISTING 8" WATER LINE
- DENOTES EXISTING 16" WATER LINE
- DENOTES EXISTING 36" WATER LINE

BENCHMARK:

BEARINGS, DISTANCES AND COORDINATES SHOWN ARE LAMBERT GRID WHICH IS RELATIVE TO THE TEXAS STATE PLANE COORDINATE SYSTEM, TEXAS CENTRAL ZONE, NAD 1983. ELEVATIONS ARE BASED ON GPS OBSERVATIONS CONFORMING TO NAVD 1988.

TEMPORARY BENCHMARK #1:
PK NAIL
N: 10,703,707.20
E: 1,723,106.55
ELEVATION: 2858.10

CONTACT MAVERICK ENGINEERING, LLC. FOR ADDITIONAL BENCHMARKS OR CONTROL STAKING 432-262-0999

Know what's below. Call before you dig.

MAVERICK ENGINEERING
1909 West Wall Street, Suite "K"
Midland, Texas 79701 TBPELS FIRM: F-15089
Tel: (432) 262-0999 Fax: (432) 262-0989
www.Maverick-Engr.com

NO.	REVISIONS	BY:	APPR.	DATE

DRAWN BY: CLB
CHECKED BY: ALM
APPROVED BY: ALM
DATE: 05/14/2019
JOB: 180218

EXISTING SITE TOPOGRAPHY
FIRE STATION 11

LOT 01, BLOCK 01, LLANO COUNTRY ADDITION,
AN ADDITION TO THE CITY OF MIDLAND,
MIDLAND COUNTY, TEXAS.

SURVEY NOTE:

THE SURVEY SHOWN ON THIS SHEET IS INCLUDED FOR REFERENCE PURPOSES ONLY. THE SEALING PROFESSIONAL TAKING RESPONSIBILITY FOR THE SURVEY IS NOTED THERE ON.

SHEET C111 OF 19

F:\2018\180218-MARTINEZ ARCHITECTS-FIRE STATION 11 CUP\3-DRAWINGS\CIVIL CONSTRUCTION PLANS 180218 C111 EXISTING SITE TOPOGRAPHY.DWG

© COPYRIGHT 2018 ALL RIGHTS RESERVED

4.1345

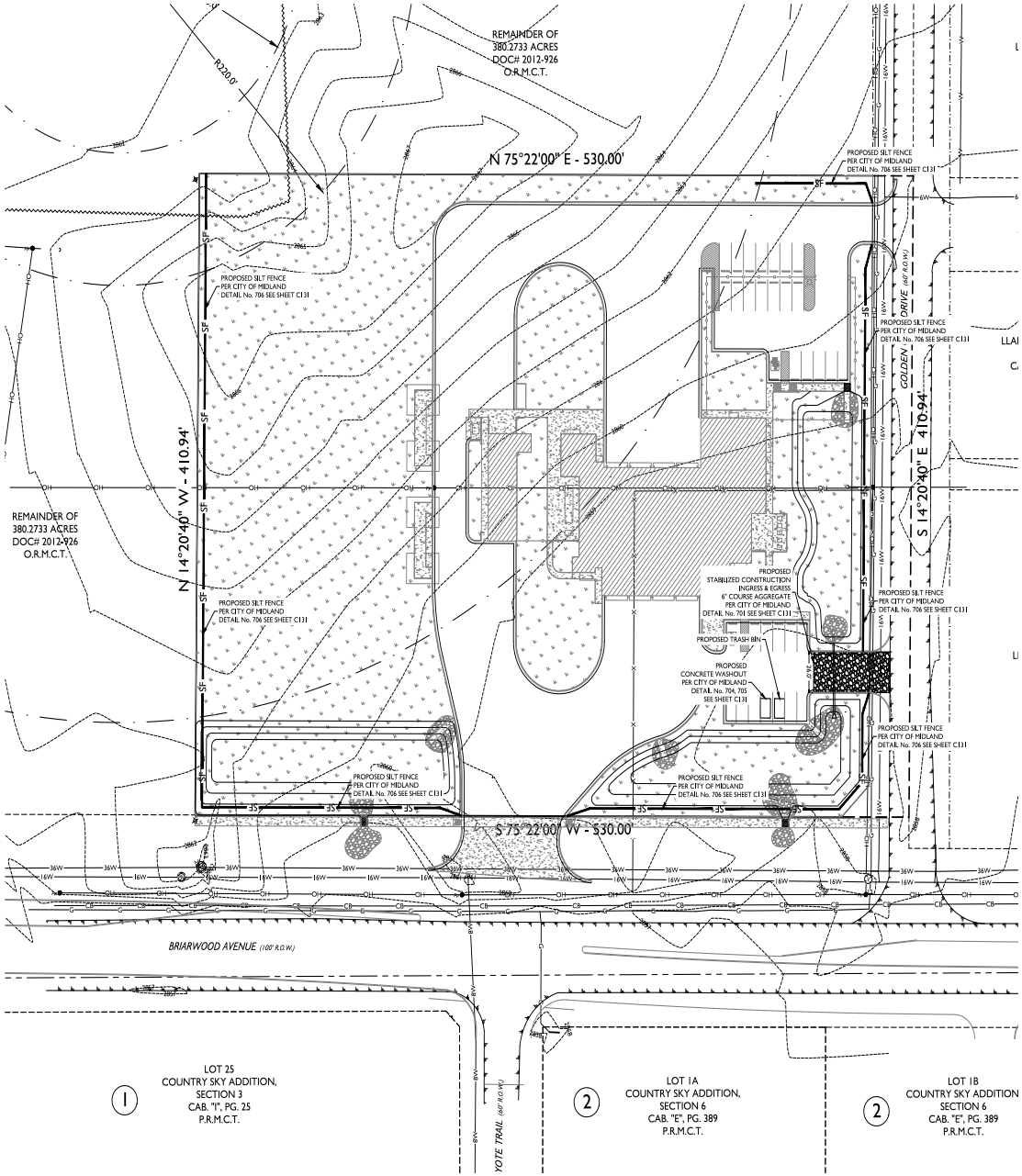

0' 40' 80' 120'

SCALE 1" = 40'

LEGEND

- DENOTES FOUND MONUMENT AS NOTED
- DENOTES SET 1/2" IRON ROD W/PLASTIC CAP MARKED "CTLS"
- DENOTES TEMPORARY BENCHMARK
- DENOTES EXISTING FIRE HYDRANT
- DENOTES EXISTING WATER VALVE
- DENOTES EXISTING MANHOLE
- DENOTES EXISTING GUY ANCHOR
- DENOTES EXISTING POWER POLE
- 2850 DENOTES EXISTING CONTOUR
- DENOTES BOUNDARY LINE
- DENOTES SURROUNDING PROPERTY
- DENOTES EXISTING FLOODWAY
- DENOTES EDGE OF ASPHALT
- OH DENOTES EXISTING OVERHEAD ELECTRIC LINE
- DENOTES EXISTING FENCE
- G DENOTES EXISTING GAS LINE
- CB DENOTES EXISTING UNDERGROUND CABLE LINE
- W DENOTES EXISTING WATER LINE
- 6W DENOTES EXISTING 6" WATER LINE
- 8W DENOTES EXISTING 8" WATER LINE
- 16W DENOTES EXISTING 16" WATER LINE
- 36W DENOTES EXISTING 36" WATER LINE
- SF DENOTES PROPOSED SILT FENCE
- DENOTES PROPOSED CONSTRUCTION ENTRANCE

SWPPP GENERAL NOTES:

1. IT IS THE INTENT OF THE INFORMATION PROVIDED ON THIS SHEET AND WITHIN THE SPECIFICATIONS TO BE USED AS THE GENERAL GUIDELINES OF THE STORM WATER POLLUTION PREVENTION PLAN FOR THIS PROJECT AND TO ESTABLISH A MINIMUM BASIS OF COMPLIANCE WITH TPDES REGULATIONS. THE CONTRACTOR IS TO FILE NOTICE OF INTENT (NOI) UNDER TDPES CONSTRUCTION GENERAL PERMIT, TXR 150000.
2. THE STORM WATER POLLUTION PREVENTION PLAN SHOULD ADDRESS THREE GOALS: TO DIVERT WATER FROM UPSLOPE AREAS AROUND DISTURBED AREAS OF THE SITE, TO LIMIT EXPOSURE OF DISTURBED AREAS TO THE SHORTEST DURATION POSSIBLE, AND TO REMOVE SEDIMENT FROM STORM WATER BEFORE IT LEAVES THE SITE.
3. THE CONTRACTOR IS TO MAKE THE STORM WATER POLLUTION PREVENTION PLAN AVAILABLE, UPON REQUEST, TO THE TCEQ.
4. THE CONTRACTOR MUST AMEND THE STORM WATER POLLUTION PREVENTION PLAN WHENEVER THERE IS A CHANGE IN DESIGN, CONSTRUCTION, OPERATION, MAINTENANCE OF THE PLAN, OR WHEN THE EXISTING PLAN PROVES INEFFECTIVE. MODIFICATIONS INCLUDING DESIGN AND ALL ADDITIONAL MATERIALS AND WORK IS TO BE ACCOMPLISHED BY THE CONTRACTOR AT NO ADDITIONAL EXPENSE TO THE OWNER. NO CHANGE TO EROSION CONTROL MEASURES SHOWN ON THESE PLANS AND SPECIFICATIONS SHALL BE MADE WITHOUT CONSENT OF OWNER AND ENGINEER.
5. STABILIZATION MEASURES ARE TO BE INSPECTED AT A MINIMUM OF ONCE EVERY SEVEN DAYS AND WITHIN 24 HOURS AFTER ANY STORM EVENT GREATER THAN 0.5 INCHES. REPAIRS OF INADEQUACIES REVEALED BY THE INSPECTIONS MUST BE IMPLEMENTED WITHIN SEVEN CALENDAR DAYS FOLLOWING THE INSPECTION.
6. AN INSPECTION REPORT THAT SUMMARIZES INSPECTION ACTIVITIES AND IMPLEMENTATION OF THE STORM WATER POLLUTION PREVENTION PLAN IS TO BE MAINTAINED AND MADE PART OF THE PLAN.
7. ALL CONTRACTORS AND SUBCONTRACTORS IDENTIFIED IN THE PLAN MUST CERTIFY AS TO AN UNDERSTANDING OF THE NPDES CONSTRUCTION GENERAL PERMIT BEFORE CONDUCTING ANY ACTIVITY IDENTIFIED IN THE STORM WATER POLLUTION PREVENTION PLAN.
8. THE CONTRACTOR IS TO ADOPT APPROPRIATE CONSTRUCTION SITE MANAGEMENT PRACTICES TO PREVENT THE DISCHARGE OF OILS, GREASE, PAINTS, GASOLINE, AND OTHER POLLUTANTS TO STORM WATER. APPROPRIATE PRACTICES CAN INCLUDE: DESIGNATING AREAS FOR EQUIPMENT MAINTENANCE AND REPAIR, REGULAR COLLECTION OF WASTES, CONVENIENTLY LOCATED WASTE RECEPTACLES, AND DESIGNATION OF CONTROL EQUIPMENT WASHING.
9. THE CONTRACTOR IS TO AMEND OR MODIFY THIS PLAN AS REQUIRED BY CONSTRUCTION MEANS, METHODS, AND SEQUENCE. MODIFICATIONS ARE NOT TO COMPROMISE THE INTENT OR THE REQUIREMENTS OF THE LAW AND THIS PLAN. MODIFICATIONS ARE NOT TO BE A BASIS FOR ADDITIONAL COST TO THE OWNER.
10. AREAS OF CONSTRUCTION ELSEWHERE ON THE JOB SITE ARE TO CONFORM TO THE DETAILS SHOWN ON THE PLANS.
11. BORROW AREAS, IF EXCAVATED, ARE TO BE PROTECTED AND STABILIZED UTILIZING THE PLAN DETAILS. ALL WORK IS TO CONFORM TO GOVERNMENTAL REQUIREMENTS AND BECOME PART OF THE STORM WATER POLLUTION PREVENTION PLAN. THIS WORK IS TO BE DONE BY THE CONTRACTOR AT NO ADDITIONAL EXPENSE TO THE OWNER OR THE ENGINEER.
12. ALL NON-PAVED AREAS ARE TO BE MULCHED AND SEEDED WITH EROSION PROTECTION IMMEDIATELY UPON COMPLETION OF FINAL GRADING. THIS INCLUDES ALL DITCHES AND EMBANKMENTS. THE CONTRACTOR IS TO MAINTAIN THE FINAL GRADING AND KEEP SEEDED AREAS WATERED UNTIL FULLY ESTABLISHED AND ACCEPTED BY THE OWNER; EROSION PROTECTION IS TO BE CONSTRUCTED AS DETAILED ON THIS SHEET.
13. THE CONTRACTOR IS TO CONSTRUCT A STABILIZED CONSTRUCTION ENTRANCE AT ALL TRAFFIC ENTRANCE / EXIT POINTS ALONG ANY PAVED ROADWAY. ENTRANCES ARE TO BE CONSTRUCTED AS DETAILED ON THIS SHEET.
14. THE CONTRACTOR IS TO CONSTRUCT A SILT FENCE AT ALL LOCATIONS SHOWN ON THE PLANS. THE SILT FENCE IS TO BE CONSTRUCTED AS DETAILED ON THIS SHEET.
15. THE CONTRACTOR IS TO DESIGNATE MATERIAL AND EQUIPMENT STORAGE AREAS MUTUALLY AGREED TO BY THE OWNER. THE STORAGE AREAS ARE TO BE GRADED FOR POSITIVE DRAINAGE AND THE SURFACE STABILIZED WITH A MINIMUM OF TWO INCHES OF CRUSHED ROCK OR GRAVEL. REINFORCED FILTER BARRIER IS TO BE INSTALLED AROUND THE STORAGE AREAS TO PREVENT ANY EROSION FROM LEAVING THE SITE.
16. N ACCORDANCE WITH PARTS III.G.1 & III.G.2 OF THE CONSTRUCTION STORMWATER GENERAL PERMIT, STABILIZATION OF ALL DISTURBED AREAS MUST, AT A MINIMUM, BE INITIATED IMMEDIATELY (I.E., AS SOON AS PRACTICABLE, BUT NO LATER THAN THE END OF NEXT WORK DAY) WHENEVER ANY EARTHWORK ACTIVITIES HAVE PERMANENTLY CEASED ON ANY PORTION OF THE SITE. THE CITY OF MIDLAND WILL NOT SUPPORT A CERTIFICATE OF OCCUPANCY UNLESS THIS REQUIREMENT HAS BEEN FULFILLED. CONTRACTOR WARNING. THIS REQUIREMENT IS STRICTLY ENFORCED

SOIL STABILIZATION NOTES:

- ALL DISTURBED AREAS ARE TO BE SEEDED AT A RATE OF 20 LBS/ACRE FOXTAIL MILLET, 2 LBS/ACRE BUFFALO GRASS, 1 LBS/ACRE LITTLE BLUESTEM, AND 1 LBS/ACRE SIDE OATS GRAMMA, OR OTHER DROUGHT TOLERANT MIXTURE APPROVED BY THE CITY ENGINEER. ALL SEEDED AREAS ARE TO BE FERTILIZED AS SPECIFIED BY THE CITY OF MIDLAND PARKS DEPARTMENT AT TIME OF PLANTING.
- AFTER DESIGNATED AREAS HAVE BEEN COMPLETED TO THE GRADES SHOWN ON THE PLANS, AREAS TO BE SEEDED ARE TO BE CULTIVATED TO A DEPTH OF 4 INCHES, EXCEPT WHERE SEEDING IS TO BE DONE USING A SEED DRILL SUITABLE FOR SEEDING INTO UNTILLED SOIL. THE SEEDBEDS ARE TO BE CULTIVATED SUFFICIENTLY TO REDUCE THE SOIL TO A STATE OF GOOD TILTH WHEN THE SOIL PARTICLES ON THE SURFACE ARE SMALL ENOUGH TO LIE CLOSELY ENOUGH TOGETHER TO PREVENT THE SEED FROM BEING COVERED TOO DEEPLY FOR OPTIMUM GERMINATION. CULTIVATION OF THE SEEDBED WILL NOT BE REQUIRED IN LOOSE SAND WHERE DEPTH OF SAND IS 4 INCHES OR MORE.
- AFTER SEEDING, CHANNEL EMBANKMENTS ARE TO BE LINED WITH A STRAW OR STRAW/COCONUT SOIL RETENTION BLANKET. THE FOLLOWING PRODUCTS, OR AN EQUAL APPROVED BY THE CITY ENGINEER MAY BE USED;
  - ECS S-1 STANDARD STRAW
  - ECS HIGH VELOCITY STRAW
  - LANDLOK BON-TERRA S2, ENS2 OR ENCS2
  - NORTH AMERICAN GREEN S75, S75BN, S150, S150BN, OR SC150
  - ALTERNATELY, SOILGUARD BONDED FIBER MATRIX MAY BE USED.
- BLANKETS ARE TO BE PLACED PARALLEL TO THE DIRECTION OF WATER FLOW. BLANKETS ARE TO BE SPREAD EVENLY WITHOUT STRETCHING SO FIBERS ARE IN DIRECT CONTACT WITH THE SOIL.
- THE UPSLOPE END OF EACH BLANKET IS TO BE BURIED AT LEAST 6 INCHES IN A VERTICAL TRENCH WITH THE SOIL PRESSED FIRMLY AGAINST THE EMBEDDED MAT. ADDITIONAL CHECK TRENCHES AT 50 FEET INTERVALS MAY BE DESIRABLE ON STEEP GRADES OR LONG FLOW AREAS.
- STRIP ENDS AND END OVERLAPS ARE TO BE STAPLED WITH NOT MORE THAN 20 INCHES BETWEEN STAPLES. ALL OTHER JOINTS AND EDGES ARE TO BE STAPLED AT 40 INCH INTERVALS.
- STAPLES USED TO ANCHOR BLANKETS ARE TO BE U SHAPED, 11 GAUGE OR HEAVIER STEEL WIRE HAVING A SPAN WIDTH OF 1 INCH AND A LENGTH OF 6 INCHES OR MORE FROM TOP TO BOTTOM AFTER BENDING.
- IF SOILGUARD BONDED FIBER MATRIX IS CHOSEN, INSTALLATION IS TO CONFORM TO MANUFACTURERS RECOMMENDATIONS.
- DISTURBED AREAS OUTSIDE THE CHANNEL ARE TO BE TREATED WITH A HYDRAULICALLY-APPLIED MULCH AT A RATE OF 2,000 LBS/ACRE.

811 Know what's below. Call before you dig.

SWPPP DETAILS:

SWPPP DETAILS ARE INCLUDED ON THE NEXT SHEET. PLEASE REFER TO THOSE DETAILS.

MAVERICK ENGINEERING
1909 West Wall Street, Suite "K"
Midland, Texas 79701 FIRM: F-15089
Tel: (432) 262-0999 Fax: (432) 262-0989
www.Maverick-Engr.com

NO.	REVISIONS	BY	APPR.	DATE
1				

DRAWN BY: CLB
CHECKED BY: ALM
APPROVED BY: ALM
DATE: 05/14/2019
JOB: 180218

SWPPP

FIRE STATION 11

LOT 01, BLOCK 01, LLANO COUNTRY ADDITION,
AN ADDITION TO THE CITY OF MIDLAND,
MIDLAND COUNTY, TEXAS.

PRELIMINARY REVIEW:

THESE PLANS ARE RELEASED UNDER THE SEAL OF ANDREW L. MILLIN, P.E. #108172 AND MAVERICK ENGINEERING (FIRM # F-15089) ON THIS DAY 05/14/2019, FOR THE PURPOSES OF INTERIM/PRELIMINARY REVIEW. THEY SHALL NOT BE USED FOR THE PURPOSES OF CONSTRUCTION.

SHEET C120 OF 19

F:\2018\180218-MARTINEZ ARCHITECTS-FIRE STATION 11 CIVIL\DRAWINGS\CIVIL CONSTRUCTION PLANS 180218 C120 SWPPP.DWG

© COPYRIGHT 2018 ALL RIGHTS RESERVED

4.1346

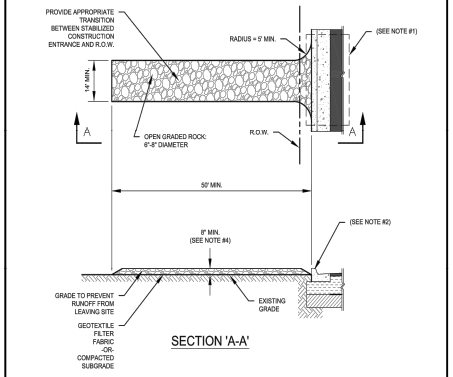

SECTION 'A-A'

NOTES:

1. IF CURB DOES NOT EXIST OR IF EXISTING CURB IS REMOVED DURING CONSTRUCTION THEN STABILIZED CONSTRUCTION ENTRANCE IS TO EXTEND TO THE EDGE OF PAVEMENT.
2. IF CURB IS LEFT IN PLACE DURING CONSTRUCTION THEN INSTALL TEMPORARY CURB PROTECTION AS PER CITY DETAIL 713.
3. LENGTH SHALL BE AS SHOWN ON THE CONSTRUCTION DRAWINGS, BUT NOT LESS THAN FIFTY (50) FEET.
4. THICKNESS OF OPEN GRADED ROCK TO BE NO LESS THAN EIGHT (8) INCHES.
5. WIDTH SHALL BE NO LESS THAN FOURTEEN (14) FEET OR THE FULL WIDTH OF ALL POINTS OF INGRESS OR EGRESS, WHICHEVER IS WIDER.
6. STABILIZED CONSTRUCTION ENTRANCE TO BE REMOVED UPON COMPLETION OF CONSTRUCTION.
7. MATERIALS AND CONSTRUCTION METHODS TO CONFORM TO CITY OF MIDLAND STANDARDS AND SPECIFICATIONS
8. CONSTRUCT AS SHOWN UNLESS OTHERWISE APPROVED IN WRITING BY THE CITY ENGINEER.

DRAWN: DPM	CHECKED: JCF	APPROVED: MCC	
MIDLAND Engineering Services	EFFECTIVE DATE: 10/01/2018	SCALE: NTS	DETAIL:
STABILIZED CONSTRUCTION ENTRANCE OPTION 1			701

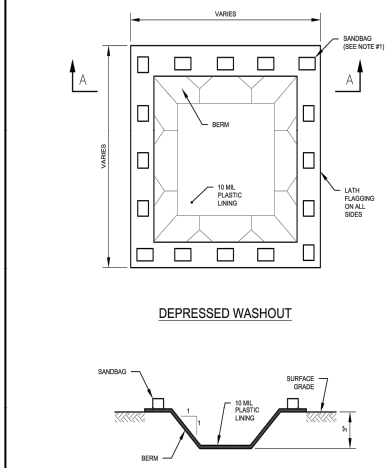

DEPRESSED WASHOUT

SECTION 'A-A'

NOTES:

1. SECURE WASHOUT STRUCTURES AND LININGS WITH SANDBAGS OR TWO SECURELY FASTENED STAKES AROUND ENTIRE WASHOUT PERIMETER.
2. MATERIALS AND CONSTRUCTION METHODS TO CONFORM TO CITY OF MIDLAND STANDARDS AND SPECIFICATIONS.
3. CONSTRUCT AS SHOWN UNLESS OTHERWISE APPROVED IN WRITING BY THE CITY ENGINEER.

DRAWN: DPM	CHECKED: JCF	APPROVED: MCC	
MIDLAND Engineering Services	EFFECTIVE DATE: 10/01/2018	SCALE: NTS	DETAIL:
CONCRETE WASHOUT OPTION 1			704

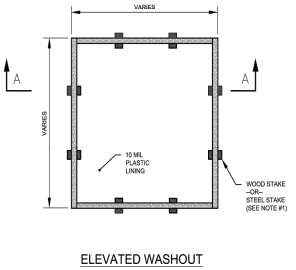

ELEVATED WASHOUT

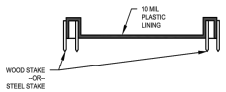

SECTION 'A-A'

NOTES:

1. THIS WASHOUT CONFIGURATION MAY NOT BE USED IN PAVED AREAS.
2. WOOD FRAME IS TO BE EQUAL TO OR BETTER THAN TWO-STACKED 2X12 ROUGH WOOD FRAME.
3. MATERIALS AND CONSTRUCTION METHODS TO CONFORM TO CITY OF MIDLAND STANDARDS AND SPECIFICATIONS.
4. CONSTRUCT AS SHOWN UNLESS OTHERWISE APPROVED IN WRITING BY THE CITY ENGINEERING.

DRAWN: DPM	CHECKED: JCF	APPROVED: MCC	
MIDLAND Engineering Services	EFFECTIVE DATE: 10/01/2018	SCALE: NTS	DETAIL:
CONCRETE WASHOUT OPTION 2			705

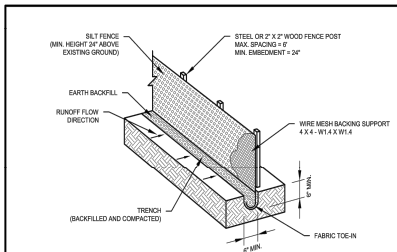

NOTES:

1. THIS DETAIL IS TO BE USED FOR SHEET FLOW CONDITIONS ONLY. DO NOT USE SILT FENCE FOR POINT FLOW OR CONCENTRATED FLOW CONDITIONS.
2. INSTALL STEEL OR WOOD POSTS, WHICH SUPPORT THE SILT FENCE, WITH A SLIGHT ANGLE TOWARD THE ANTICIPATED RUNOFF SOURCE. POSTS MUST BE EMBEDDED A MINIMUM OF ONE (1) FOOT.
3. TRENCH THE TOE OF THE SILT FENCE IN WITH A SPADE OR MECHANICAL TRENCHER, SO THAT THE DOWNSLOPE FACE OF THE TRENCH IS FLAT AND PERPENDICULAR TO THE LINE OF FLOW. WHERE THE FENCE CANNOT BE TRENCHED IN (E.G.PAVEMENT), WEIGHT DOWN FABRIC FLAP WITH WASHED GRAVEL ON UPHILL SIDE TO PREVENT FLOW UNDER FENCE.
4. THE TRENCH MUST BE A MINIMUM OF SIX (6) INCHES DEEP AND SIX (6) INCHES WIDE TO ALLOW FOR THE SILT FENCE FABRIC TO BE LAID IN THE GROUND AND BACKFILLED WITH COMPACTED MATERIAL.
5. SECURELY FASTEN SILT FENCE TO EACH STEEL SUPPORT POST OR TO WOVEN WIRE, WHICH IN TURN IS TO BE ATTACHED TO THE STEEL OR WOOD FENCE POST. INCLUDE A SIX (6) INCH DOUBLE OVERLAP, SECURELY FASTENED, WHERE ENDS OF FABRIC MEET.
6. REMOVE SILT FENCE WHEN THE SITE IS COMPLETELY STABILIZED SO AS NOT TO BLOCK OR IMPEDE STORM FLOW OR DRAINAGE.
7. REMOVE ACCUMULATED SILT WHEN IT REACHES A DEPTH OF SIX (6) INCHES. DISPOSE OF THE SILT ONSITE IN AN APPROVED LOCATION AND IN SUCH A MANNER AS TO NOT CONTRIBUTE TO ADDITIONAL SILTATION.
8. MATERIALS AND CONSTRUCTION METHODS TO CONFORM TO CITY OF MIDLAND STANDARDS AND SPECIFICATIONS.
9. CONSTRUCT AS SHOWN UNLESS OTHERWISE APPROVED IN WRITING BY THE CITY ENGINEER.

DRAWN: DPM	CHECKED: JCF	APPROVED: MCC	
MIDLAND Engineering Services	EFFECTIVE DATE: 10/01/2018	SCALE: NTS	DETAIL:
SILT FENCE			706

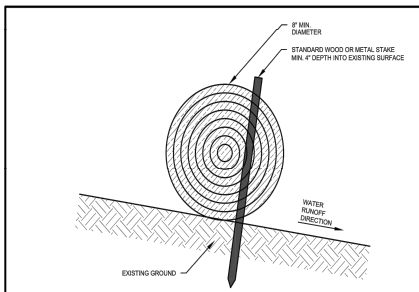

NOTES:

1. THIS DETAIL IS TO USED FOR SHEET FLOW CONDITIONS ONLY. DO NOT USE FILTER SOCK FOR POINT FLOW OR CONCENTRATED FLOW CONDITIONS.
2. DO NOT USE FILTER SOCK FOR SHEET FLOW WATERSHEDS LARGER THAN ONE (1) ACRE.
3. USE POLYPROPYLENE NETTING, BURLAP, OR JUTE FABRIC TO CONSTRUCT THE FILTER SOCK.
4. FILL FILTER SOCK WITH STRAW, HAY, COCONUT FIBER, OR COMPOSITE MATERIAL.
5. PLACE STAKING EVERY THREE (3) TO FOUR (4) FEET AT A MINIMUM.
6. MATERIALS AND CONSTRUCTION METHODS TO CONFORM TO CITY OF MIDLAND STANDARDS AND SPECIFICATIONS.
7. CONSTRUCT AS SHOWN UNLESS OTHERWISE APPROVED IN WRITING BY THE CITY ENGINEER.

DRAWN: DPM	CHECKED: JCF	APPROVED: MCC	
MIDLAND Engineering Services	EFFECTIVE DATE: 10/01/2018	SCALE: NTS	DETAIL:
FILTER SOCK			707

MAVERICK ENGINEERING
1909 West Wall Street, Suite "K"
Midland, Texas 79701 FIRM: F-15089
Tel: (432) 262-0993 Fax: (432) 262-0989
www.Maverick-Engr.com

NO.	BY:	DATE:

REVISIONS

DRAWN BY:	CLB
CHECKED BY:	ALM
APPROVED BY:	ALM
DATE:	05/14/2019
JOB:	180218

SWPPP DETAILS

FIRE STATION 11

LOT 01, BLOCK 01, LLANO COUNTRY ADDITION, AN ADDITION TO THE CITY OF MIDLAND, MIDLAND COUNTY, TEXAS.

PRELIMINARY REVIEW:

THESE PLANS ARE RELEASED UNDER THE SEAL OF ANDREW L. MILLIN, P.E. #108172 AND MAVERICK ENGINEERING (FIRM # F-15089) ON THIS DAY 05/14/2019, FOR THE PURPOSES OF INTERIM/PRELIMINARY REVIEW. THEY SHALL NOT BE USED FOR THE PURPOSES OF CONSTRUCTION.

SHEET C130 OF 19

4.1347

© COPYRIGHT 2018 ALL RIGHTS RESERVED

F:\2018\180218-MARTINEZ ARCHITECTS-FIRE STATION 11 CMS\STD\DRAWINGS\CIVIL CONSTRUCTION PLANS\180218 C130 SWPPP DETAILS.DWG

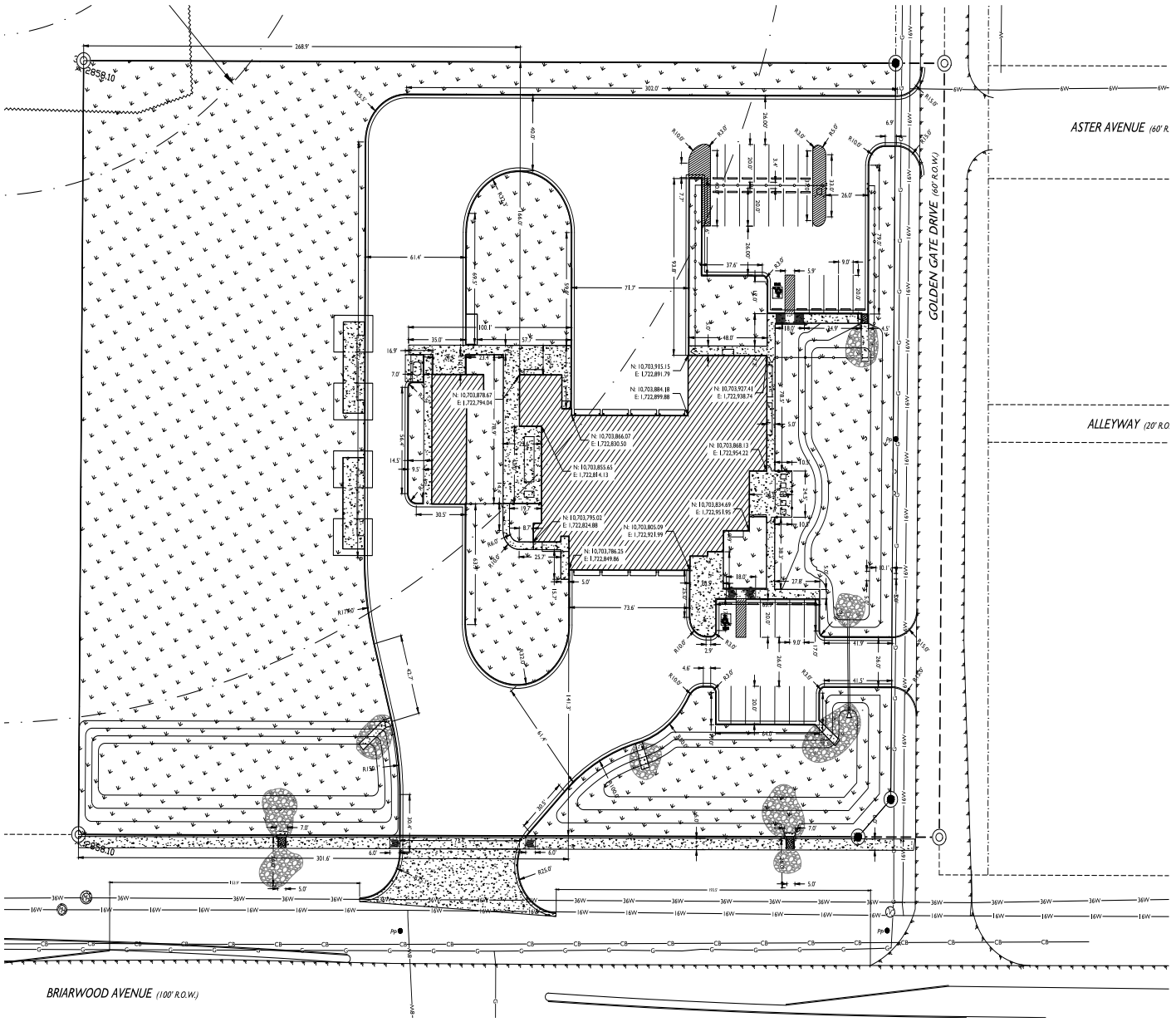

0' 30' 60' 90'

SCALE 1" = 30'

LEGEND

- DENOTES FOUND MONUMENT AS NOTED
- DENOTES SET 1/2" IRON ROD W/PLASTIC CAP MARKED "CTLS"
- DENOTES TEMPORARY BENCHMARK
- DENOTES EXISTING FIRE HYDRANT
- DENOTES EXISTING WATER VALVE
- DENOTES EXISTING MANHOLE
- DENOTES EXISTING GUY ANCHOR
- DENOTES EXISTING POWER POLE
- 2850 DENOTES EXISTING CONTOUR
- DENOTES BOUNDARY LINE
- DENOTES SURROUNDING PROPERTY
- DENOTES EXISTING FLOODWAY
- DENOTES EDGE OF ASPHALT
- OH DENOTES EXISTING OVERHEAD ELECTRIC LINE
- DENOTES EXISTING FENCE
- G DENOTES EXISTING GAS LINE
- CB DENOTES EXISTING UNDERGROUND CABLE LINE
- W DENOTES EXISTING WATER LINE
- 6W DENOTES EXISTING 6" WATER LINE
- 8W DENOTES EXISTING 8" WATER LINE
- 16W DENOTES EXISTING 16" WATER LINE
- 36W DENOTES EXISTING 36" WATER LINE

DIMENSIONAL NOTE:

DIMENSIONS SHOWN ARE TYPICALLY TO BACK OF CURB UNLESS NOTED OTHERWISE.

CONTRACTOR TO USE STRUCTURAL & ARCHITECTURAL PLANS TO CONFIRM BUILDING LAYOUT. MAVERICK ENGINEERING IS NOT RESPONSIBLE FOR BUILDING LAYOUT.

811 Know what's below. Call before you dig.

MAVERICK ENGINEERING
1909 West Wall Street, Suite "K"
Midland, Texas 79701 FIRM: F-15089
Tel: (432) 262-0993 Fax: (432) 262-0989
www.Maverick-Engr.com

NO.	REVISIONS	APPR.	DATE

DRAWN BY: CLB
CHECKED BY: ALM
APPROVED BY: ALM
DATE: 05/14/2019
JOB: 180218

DIMENSIONAL PLAN

FIRE STATION 11

LOT 01, BLOCK 01, LLANO COUNTRY ADDITION,
AN ADDITION TO THE CITY OF MIDLAND,
MIDLAND COUNTY, TEXAS.

PRELIMINARY REVIEW:

THESE PLANS ARE RELEASED UNDER THE SEAL OF ANDREW L. MILLIN, P.E. #108572 AND MAVERICK ENGINEERING (FIRM # F-15089) ON THIS DAY 05/14/2019, FOR THE PURPOSES OF INTERIM/PRELIMINARY REVIEW. THEY SHALL NOT BE USED FOR THE PURPOSES OF CONSTRUCTION.

SHEET C200 OF 19

F:\2018\180218-MARTINEZ_ARCHITECTS-FIRE STATION 11 CIVIL\3-DRAWINGS\CIVIL CONSTRUCTION PLANS 180218 C200 DIMENSIONAL PLAN.DWG

© COPYRIGHT 2018 ALL RIGHTS RESERVED

4.1348

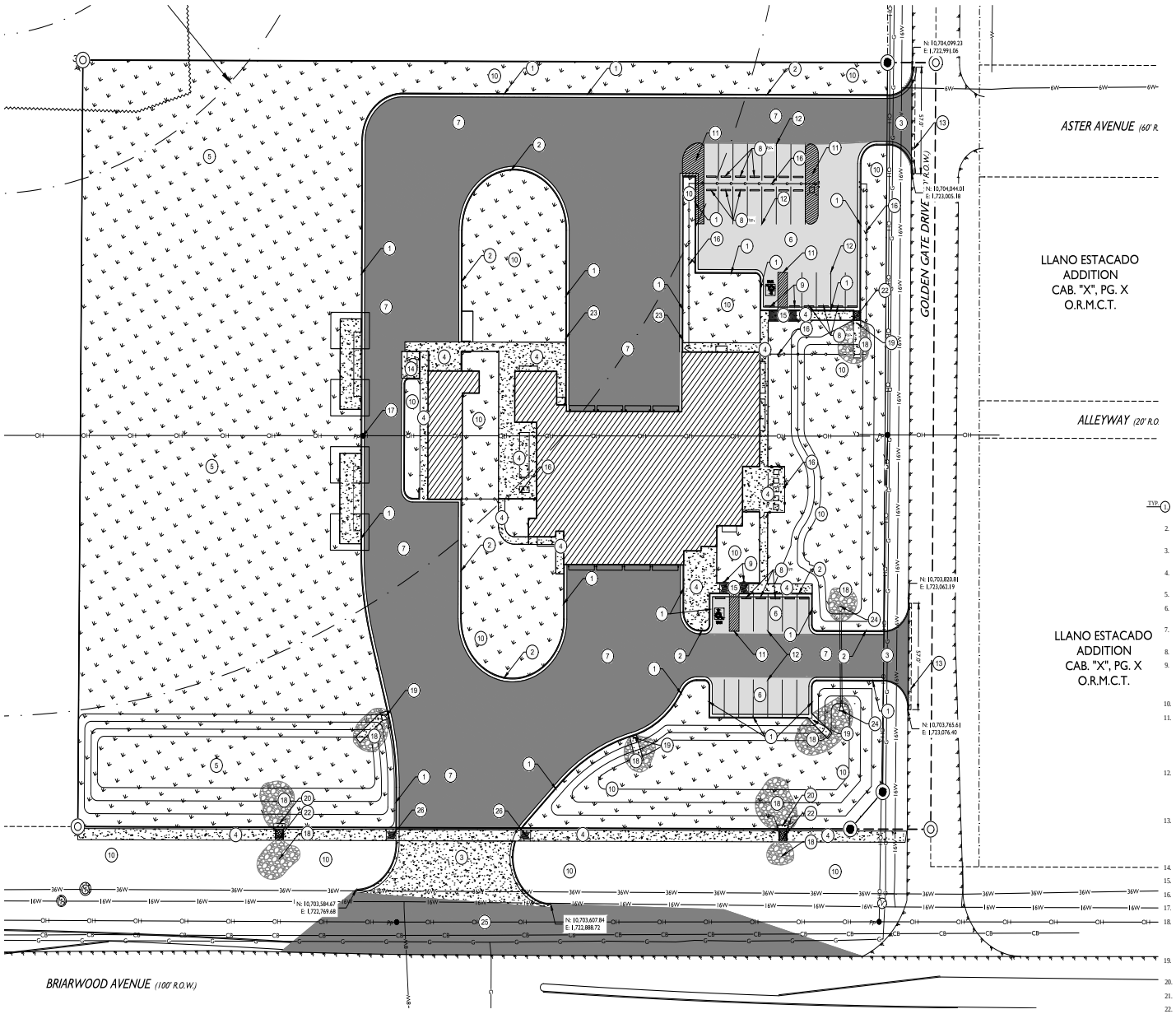

0' 30' 60' 90'

SCALE 1" = 30'

LEGEND

- DENOTES FOUND MONUMENT AS NOTED
- DENOTES SET 1/2" IRON ROD W/PLASTIC CAP MARKED "CTLS"
- DENOTES TEMPORARY BENCHMARK
- DENOTES EXISTING FIRE HYDRANT
- DENOTES EXISTING WATER VALVE
- DENOTES EXISTING MANHOLE
- DENOTES EXISTING GUY ANCHOR
- DENOTES EXISTING POWER POLE
- 2850 DENOTES EXISTING CONTOUR
- DENOTES BOUNDARY LINE
- DENOTES SURROUNDING PROPERTY
- DENOTES EXISTING FLOODWAY
- DENOTES EDGE OF ASPHALT
- OH DENOTES EXISTING OVERHEAD ELECTRIC LINE
- DENOTES EXISTING FENCE
- G DENOTES EXISTING GAS LINE
- CB DENOTES EXISTING UNDERGROUND CABLE LINE
- W DENOTES EXISTING WATER LINE
- 6W DENOTES EXISTING 6" WATER LINE
- 8W DENOTES EXISTING 8" WATER LINE
- 16W DENOTES EXISTING 16" WATER LINE
- 36W DENOTES EXISTING 36" WATER LINE

PAVING NOTES:

TYP. (1) CONSTRUCT STANDARD (RAISED LIP) TYPE "A" CURB PER DETAIL 205 OF THE CITY OF MIDLAND'S STANDARD CONSTRUCTION DETAILS, INCLUDED ON SHEET C220.

2. CONSTRUCT STANDARD (INVERT) TYPE "C" CURB PER DETAIL 207 OF THE CITY OF MIDLAND'S STANDARD CONSTRUCTION DETAILS, INCLUDED ON SHEET C220.
3. CONSTRUCT STANDARD MULTI-FAMILY & COMMERCIAL DRIVEWAY PER THE CITY OF MIDLAND'S STANDARD CONSTRUCTION DETAILS 221(A&B), INCLUDED ON SHEET C220.
4. CONSTRUCT FIBERMESH REINFORCED SIDEWALK PER DETAIL 225 ON SHEET C220. WIDTH PER DIMENSIONAL.
5. RAW LAND, TO BE GRADED AS NEEDED TO TIE IN FINISHED GRADE. SEE GRADING PLAN.
6. INSTALL MEDIUM DUTY CONCRETE OR MEDIUM DUTY ASPHALT PAVEMENT PER OWNER DIRECTION, SEE DETAILS 05 OR 01 ON SHEET C221.
7. INSTALL HEAVY DUTY CONCRETE OR HEAVY DUTY ASPHALT PAVEMENT PER OWNER DIRECTION, SEE DETAILS 06 OR 07 ON SHEET C221
8. INSTALL PRECAST CONCRETE WHEEL STOPS PER DETAIL 03 ON SHEET C221.
9. INSTALL ADA PARKING SPOT SIGN AND INDICATOR PER DETAIL 02 ON SHEET C221. HANDICAP PARKING SPOT INDICATOR TO BE MARKED AS SHOWN. MARKING IS TO BE [SHERWIN WILLIAMS PROMAR ALKYD FAST DRY ZONE MARKING PAINT, TXDOT DMS-8220 THERMOPLASTIC MATERIAL (100 MM)] OR APPROVED EQUAL.
10. LANDSCAPING. SEE LANDSCAPE PLANS.
11. AISLE / ISLAND / ACCESSIBLE ROUTE TO BE MARKED AS SHOWN. MARKINGS ARE TO BE PAINTED WITH WHITE 4" WIDE STRIPES, SPACED AT 2 FT APART DIAGONALLY ACROSS AREAS INDICATED, AND OUTLINED AROUND THE AREA WITH THE SAME. PAINT IS TO BE SHERWIN WILLIAMS PROMAR ALKYD FAST DRY ZONE MARKING PAINT OR APPROVED EQUIV. CONTRACTOR IS TO ENSURE SURFACE IS CLEAN AND DRY PRIOR TO PAINT APPLICATION. PAINT IS TO BE APPLIED IN TWO COATS, SPRAYED IN OPPOSITE DIRECTIONS.
12. PARKING LOT STRIPING TO BE MARKED AS SHOWN. EACH PARKING STRIPE IS TO BE MARKED WITH A WHITE 4" WIDE STRIPE USING SHERWIN WILLIAMS PROMAR ALKYD FAST DRY ZONE MARKING PAINT OR APPROVED EQUAL. CONTRACTOR IS TO ENSURE SURFACE IS CLEAN AND DRY PRIOR TO PAINT APPLICATION. WIDTH AND LENGTH OF SPACES AND AISLES PER SITE DIMENSIONS SHOWN. PAINT IS TO BE APPLIED IN TWO COATS, SPRAYED IN OPPOSITE DIRECTIONS.
13. CONTRACTOR TO SAWCUT AND REMOVE TWO (2) FEET MINIMUM ASPHALT FROM EXISTING CURB AND GUTTER LIP. THE EXISTING ASPHALT PAVEMENT REPLACED IS TO MATCH CURRENT SECTION OF EXISTING ROADWAY. CONTRACTOR IS TO CLEANLY TIE INTO EXISTING CURB. DETERMINATION OF EXACT LOCATION MAY NEED TO BE FIELD VERIFIED BY CONTRACTOR. CONTRACTOR TO NOTIFY ENGINEER OF RECORD OF ANY DAMAGE OR TIE IN PROBLEMS.
14. INSTALL DUMPSTER, SEE ARCHITECTS PLANS FOR DETAILS.
15. INSTALL PARALLEL CURB RAMP PER DETAIL 230 AND 233 ON SHEET C220.
16. INSTALL FENCING SEE ARCHITECTS PLANS FOR DETAILS.
17. EXISTING POWER POLE TO BE RELOCATED.
18. CONTRACTOR IS TO INSTALL RIP-RAP, NOMINAL D_{50} (7.31" TO 9.92" DIAMETER LOOSE RIP-RAP OR BULL ROCK AT 12" DEPTH). ROCK IS TO BE PLACED FLUSH WITH GRADE PER GRADING PLAN. A FILTER FABRIC COMPLIANT WITH TXDOT DMS-6200 TYPE 2 (OR APPROVED EQUAL) IS TO BE PLACED BENEATH THE RIP-RAP. AREA PER LAYOUT PLAN.
19. INSTALL CURB OPENING WITH SPLASH PAD AND RIP RAP STABILIZATION FOR BASIN INLET PER DETAIL 09 ON SHEET C221.
20. INSTALL BASIN OUTLET W/ RIP RAP STABILIZATION PER DETAIL 10 ON SHEET C221
21. INSTALL CONCRETE DRAINAGE FLUME PER DETAIL 08 ON SHEET C221.
22. CONSTRUCT STANDARD FLUME WITH COVER PLATE PER DETAILS 238 OF THE CITY OF MIDLAND'S STANDARD CONSTRUCTION DETAILS, INCLUDED ON SHEET C220.
23. TRANSITION CURB HEIGHT FROM 0" TO 6" OVER THIS LENGTH, SEE GRADING PLAN.
24. INSTALL 12" PVC PIPE WITH CONCRETE FLARED END TREATMENT PER DETAIL 01 ON SHEET C220. PIPE TO BE MITERED TO CONFORM TO SLOPE. APPROX. LENGTH OF PIPE ± 51 LF.
25. INSTALL TEMPORARY MEDIUM DUTY ASPHALT PER DETAIL 01 ON SHEET C221.
26. INSTALL DIRECTIONAL CURB RAMP IN RADIUS PER DETAIL 231 OF THE CITY OF MIDLAND'S STANDARD CONSTRUCTION DETAILS, INCLUDED ON SHEET C222.

CONCRETE JOINTING NOTE:

MAVERICK DOES NOT TYPICALLY PROVIDE A JOINT LAYOUT PLAN WITH CONCRETE DESIGN. THE CONTRACTOR WILL BE REQUIRED TO PROVIDE THEIR OWN JOINT LAYOUT PLAN. MAVERICK CAN PROVIDE THIS SERVICE TO THE CONTRACTOR AT AN ADDITIONAL EXPENSE. PLEASE CONTACT MAVERICK FOR MORE INFORMATION ON THIS ADDITIONAL DESIGN SERVICE.

811 Know what's below. Call before you dig.

MAVERICK ENGINEERING
1909 West Wall Street, Suite "K"
Midland, Texas 79701 FIRM: F-15089
Tel: (432) 262-0999 Fax: (432) 262-0989
www.Maverick-Engr.com

BY	APPR.	DATE

REVISIONS

DRAWN BY: CLB
CHECKED BY: ALM
APPROVED BY: ALM
DATE: 05/14/2019
JOB: 180218

PAVING PLAN

FIRE STATION 11

LOT 01, BLOCK 01, LLANO COUNTRY ADDITION, AN ADDITION TO THE CITY OF MIDLAND, MIDLAND COUNTY, TEXAS.

PRELIMINARY REVIEW:

THESE PLANS ARE RELEASED UNDER THE SEAL OF ANDREW L. MILLIN, P.E. #108172 AND MAVERICK ENGINEERING (FIRM # F-15089) ON THIS DAY 05/14/2019, FOR THE PURPOSES OF INTERIM/PRELIMINARY REVIEW. THEY SHALL NOT BE USED FOR THE PURPOSES OF CONSTRUCTION.

SHEET C210 OF 19

F:\2018\180218-MARTINEZ_ARCHITECTS-FIRE STATION 11 CUP\5-DRAWINGS\CIVIL CONSTRUCTION PLANS\180218 C210 PAVING PLAN.DWG

© COPYRIGHT 2018 ALL RIGHTS RESERVED

4.1.1349

4.1350

© COPYRIGHT 2018 ALL RIGHTS RESERVED

F:\2018\180218-MARTINEZ ARCHITECTS-FIRE STATION 11 CIVILS\DRAWINGS\CIVIL CONSTRUCTION PLANS\180218 C220 PAVING DETAILS.DWG

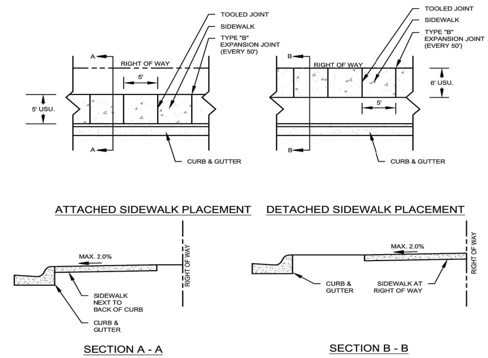

NOTES:

1. CONCRETE TO BE CITY OF MIDLAND CLASS "A" AND HAVE A MINIMUM 28 DAY COMPRESSION STRENGTH OF 3000 PSI. USE FIBER REINFORCED CONCRETE PAVEMENT THROUGHOUT.
2. SIDEWALK TO BE A MINIMUM OF 5' WIDE AND 4" THICK.
3. SIDEWALKS TO HAVE TYPE A SAWCUT JOINTS OR TOOLED JOINTS EVERY 5'.
4. TYPE "B" EXPANSION JOINTS TO BE LOCATED AT ALL PEDESTRIAN ACCESS RAMPS AND WHEREVER NEW SIDEWALK IS PLACED ADJACENT TO EXISTING CONCRETE.
5. ATTACHED SIDEWALK WILL BE LOCATED ADJACENT TO THE BACK OF CURB.
6. DETACHED SIDEWALK WILL BE LOCATED ADJACENT TO THE RIGHT-OF-WAY.
7. SIDEWALK CROSS-SLOPE MAY NOT EXCEED 2.0%.
8. ALL EXPOSED SIDEWALK EDGES TO HAVE A 1/2" RADIUS.
9. WHERE OBSTRUCTION IN SIDEWALK EXIST, THERE SHALL BE A 3' MINIMUM CLEARANCE. SIDEWALK LOCATION MAY BE SHIFTED WITH THE APPROVAL OF THE CITY ENGINEER.
10. ALL SIDEWALKS WITH A CONCRETE SURFACE SHALL HAVE A COURSE BROOM FINISH OR OTHER ROUGH NON-SKID TYPE FINISH AS APPROVED BY THE CITY ENGINEER.
11. MATERIALS AND CONSTRUCTION METHODS TO CONFORM TO THE CITY OF MIDLAND STANDARDS AND SPECIFICATIONS.
12. CONSTRUCT AS SHOWN UNLESS OTHERWISE APPROVED IN WRITING BY THE CITY ENGINEER.
13. SIDEWALKS IN DOWNTOWN PER CENTRAL BUSINESS DISTRICT POLICY.

MIDLAND Engineering Services | DRAWN: DPM | CHECKED: JCF | APPROVED: MCC | EFFECTIVE DATE: 10/01/2018 | SCALE: NTS | DETAIL: 225

STANDARD SIDEWALK

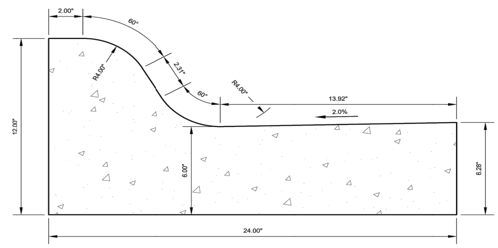

NOTES:

1. CONCRETE TO BE CITY OF MIDLAND CLASS "C", 3600 PSI. USE FIBER REINFORCED CONCRETE PAVEMENT THROUGHOUT.
2. SEAL CONCRETE JOINT AT FACE OF CURB WHEN ADJACENT TO CONCRETE PAVEMENT AND NOT INTEGRAL WITH THAT PAVEMENT.
3. MATERIALS AND CONSTRUCTION METHODS TO CONFORM TO CITY OF MIDLAND STANDARDS AND SPECIFICATIONS.
4. CONSTRUCT AS SHOWN UNLESS OTHERWISE APPROVED IN WRITING BY THE CITY ENGINEER.

MIDLAND Engineering Services | DRAWN: DPM | CHECKED: JCF | APPROVED: MCC | EFFECTIVE DATE: 10/01/2018 | SCALE: NTS | DETAIL: 205

TYPE A STANDARD CURB AND GUTTER

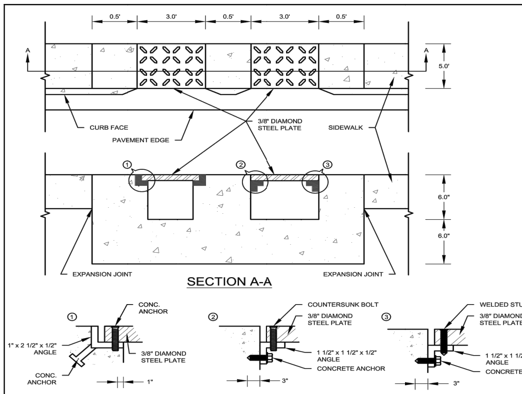

NOTES:

1. CONCRETE TO BE CITY OF MIDLAND CLASS "C", 3600 PSI. USE FIBER REINFORCED CONCRETE PAVEMENT THROUGHOUT.
2. STEEL PLATE MUST BE FIXED UTILIZING ONE OF THE OPTIONS IN THIS DETAIL.
3. SEAL ALL CONCRETE JOINTS.
4. MATERIAL AND CONSTRUCTION METHODS TO CONFORM TO THE CITY OF MIDLAND STANDARDS AND SPECIFICATIONS.
5. CONSTRUCT AS SHOWN UNLESS OTHERWISE APPROVED IN WRITING BY THE CITY ENGINEER.

MIDLAND Engineering Services | DRAWN: DPM | CHECKED: JCF | APPROVED: MCC | EFFECTIVE DATE: 10/01/2018 | SCALE: NTS | DETAIL: 238

ELEVATED PEDESTRIAN STEEL PLATE FLUME CROSSING

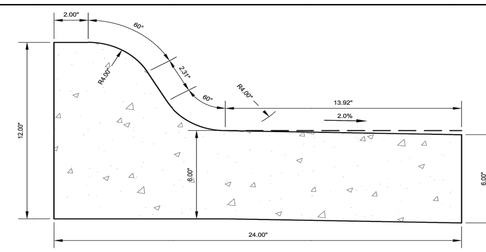

NOTES:

1. CONCRETE WILL BE THE CITY OF MIDLAND CLASS "C", 3600 PSI. USE FIBER REINFORCED CONCRETE PAVEMENT THROUGHOUT.
2. SEAL CONCRETE JOINT AT FACE OF CURB WHEN ADJACENT TO CONCRETE PAVEMENT AND NOT INTEGRAL WITH THAT PAVEMENT.
3. MATERIALS AND CONSTRUCTION METHODS TO CONFORM TO CITY OF MIDLAND STANDARDS AND SPECIFICATIONS.
4. CONSTRUCT AS SHOWN UNLESS OTHERWISE APPROVED IN WRITING BY THE CITY ENGINEER.

MIDLAND Engineering Services | DRAWN: DPM | CHECKED: JCF | APPROVED: MCC | EFFECTIVE DATE: 10/01/2018 | SCALE: NTS | DETAIL: 207

TYPE C INVERT CURB AND GUTTER

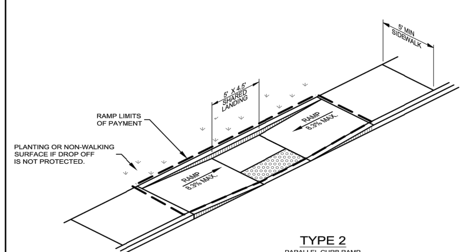

CURB RAMP NOTES:

1. ADJUST CURB RAMP LOCATION AND OR TYPE SO THAT NO OBSTRUCTION IS LOCATED WITHIN THE LANDING AREA.
2. ALL SLOPES ARE MAXIMUM ALLOWABLE. THE LEAST POSSIBLE SLOPE THAT WILL STILL DRAIN PROPERLY SHOULD BE USED.
3. LANDINGS SHALL BE 5'X 5' MINIMUM WITH A MAXIMUM 2% SLOPE IN ANY DIRECTION. WHERE OBSTRUCTIONS EXIST, THERE SHALL BE A 3' MINIMUM CLEARANCE IN WIDTH AND LENGTH OF THE LANDING.
4. MANEUVERING SPACE AT THE BOTTOM OF CURB RAMPS SHALL BE A MINIMUM OF 4'X4' WHOLLY CONTAINED WITHIN THE CROSSWALK AND TO THE ENTIRE OUTSIDE OF THE PARALLEL VEHICULAR TRAVEL PATH.
5. MAXIMUM ALLOWABLE CROSS SLOPE ON SIDEWALK AND CURB RAMP SURFACES IS 2%.
6. CURB RAMPS WITH RETURNED CURBS MAY BE USED ONLY WHERE PEDESTRIANS WOULD NOT NORMALLY WALK ACROSS THE RAMP, EITHER BECAUSE THE ADJACENT SURFACE IS PLANTING OR OTHER NON-WALKING SURFACE OR BECAUSE THE SIDE APPROACH IS SUBSTANTIALLY OBSTRUCTED. OTHERWISE, PROVIDE FLARED SIDES.
7. ADDITIONAL INFORMATION ON CURB RAMP LOCATION, DESIGN, LIGHT REFLECTIVE VALUE AND TEXTURE MAY BE FOUND IN THE CURRENT EDITION OF THE TEXAS ACCESSIBILITY STANDARDS (TAS) AND 16 TAC 68.102.
8. AT INTERSECTIONS WHERE CROSSWALK MARKINGS ARE NOT REQUIRED, CURB RAMPS SHALL BE ALIGNED WITH THEORETICAL CROSSWALKS,OR AS DIRECTED BY THE ENGINEER.
9. PROVIDE A SMOOTH TRANSITION WHERE THE CURB RAMPS CONNECT TO THE STREET.
10. FLARE SLOPE SHALL NOT EXCEED 10% MEASURED ALONG CURB LINE.
11. ALL RAMPS AND LANDINGS WITH A CONCRETE SURFACE SHALL HAVE A COURSE BROOM FINISH OR OTHER ROUGH NON-SKID TYPE FINISH AS APPROVED BY THE ENGINEER.
12. PLACE 6" OF CONCRETE IN RAMPS, LANDINGS, AND FLARES THAT ARE LOCATED AT THE RETURNS ADJACENT TO THE BACK OF CURB OF ARTERIAL STREETS AND COMMERCIAL SITES.

GENERAL NOTES:

1. CONCRETE TO BE CITY OF MIDLAND CLASS "A" WITH A MINIMUM 28 DAY COMPRESSION STRENGTH OF 3000 PSI. USE FIBER REINFORCED CONCRETE THROUGHOUT.
2. MATERIALS AND CONSTRUCTION METHODS TO CONFORM TO THE CITY OF MIDLAND STANDARDS AND SPECIFICATIONS UNLESS OTHERWISE DIRECTED BY ADA STANDARDS AND RESOURCES.

MIDLAND Engineering Services | DRAWN: DPM | CHECKED: JCF | APPROVED: MCC | EFFECTIVE DATE: 10/01/2018 | SCALE: NTS | DETAIL: 230

PARALLEL CURB RAMP

1 FLARED END TREATMENT

N.T.S.

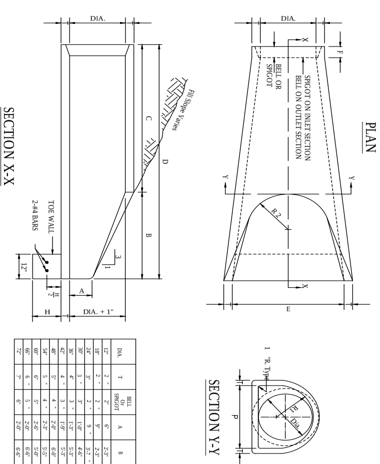

DIA.	T	BELL Or SPIGOT	A	B	C	D	E	P	R 1	R 2	F	H	WEIGHT (LBS.)
12"	2 "	2"	6"	2'-3"	3'-10"	6'-1"	2'-6"	24 "	12 "	11"	3 "	12"	740
18"	2 "	2 "	9"	2'-3"	3'-10"	6'-1"	3'-0"	29"	15 "	12"	4"	15"	990
24"	3"	2 "	9 "	3'-7 "	2'-6"	6'-1 "	4'-0"	33 "	16 "	14"	4 "	18"	1520
30"	3 "	3"	1'-0"	4'-6"	1'-7 "	6'-1 "	5'-0"	37"	18 "	15"	5"	21"	2190
36"	4"	3 "	1'-3"	5'-3"	2'-10 "	8'-1 "	6'-0"	47 "	24 "	20"	5 "	21"	4100
42"	4 "	3 "	1'-9"	5'-3"	2'-11"	8'-2"	6'-6"	53 "	27 "	22"	5 "	24"	5380
48"	5"	4 "	2'-0"	6'-0"	2'-2"	8'-2"	7'-0"	56 "	28 "	22"	5 "	24"	6550
54"	5 "	4 "	2'-3"	5'-5"	2'-11"	8'-4"	7'-6"	65 "	33 "	24"	6 "	24"	8040
60"	6"	5"	2'-6"	5'-0"	3'-3"	8'-3"	8'-0"	72 "	36 "	24"	6 "	24"	8750
66"	6 "	5 "	2'-0"	6'-6"	1'-9"	8'-3"	8'-6"	72"	36 "	24"	7 "	24"	10630
72"	7"	6"	2'-0"	6'-6"	1'-9"	8'-3"	9'-0"	77 "	38 "	24"	7 "	24"	12520

NOTES:

- END SECTIONS SHALL CONFORM TO STANDARD STRENGTH REINFORCED CONCRETE PIPE OF LIKE DIAMETER.
- JOINT BETWEEN END SECTION & PIPE CULVERT TO BE MADE BY REINFORCED CONCRETE COLLAR OR COLD ADHESIVE PREFORMED ELASTOMERIC GASKET.
- TOE WALL TO BE INCLUDED WHEN SPECIFIED.

DETECTABLE WARNING SURFACE NOTES:

1. DETECTABLE WARNING SURFACE SUCH AS ARMOR-TILE ADA SOUND AMPLIFYING DETECTABLE/TACTILE WARNING SURFACE TILE OR EQUAL AND APPROVED BY THE ENGINEER AS MEETING ALL REQUIREMENTS OF ASTM C-936, C-33.
2. CURB RAMPS MUST CONTAIN A DETECTABLE WARNING SURFACE THAT CONSISTS OF RAISED TRUNCATED DOMES COMPLYING WITH SECTION 7.05 DETACHABLE WARNINGS OF THE TEXAS ACCESSIBILITY STANDARDS (TAS). THE SURFACE MUST CONTRAST VISUALLY WITH ADJOINING SURFACES, INCLUDING SIDE FLARES. FURNISH DARK BROWN OR DARK RED DETECTABLE WARNING SURFACE ADJACENT TO UNCOLORED CONCRETE,UNLESS SPECIFIED ELSEWHERE IN THE PLANS.
3. DETECTABLE WARNING SURFACES MUST BE SLIP RESISTANT AND NOT ALLOW WATER TO ACCUMULATE.
4. ALIGN TRUNCATED DOMES IN THE DIRECTION OF PEDESTRIAN TRAVEL WHEN ENTERING THE STREET.
5. SHADED AREAS INDICATE THE APPROXIMATE LOCATION FOR THE DETECTABLE WARNING SURFACE FOR EACH CURB RAMP TYPE.
6. DETECTABLE WARNING SURFACES SHALL BE A MINIMUM OF 24" IN DEPTH IN THE DIRECTION OF PEDESTRIAN TRAVEL.
7. DETECTABLE WARNING SURFACES SHALL BE LOCATED SO THAT THE EDGE NEAREST THE CURB LINE IS A MINIMUM OF 6" AND A MAXIMUM OF 10" FROM THE EXTENSION OF THE FACE OF CURB. DETECTABLE WARNING SURFACES MAY BE CURVED ALONG THE CORNER RADIUS.
8. SINGLE TILE PLATES COLONIAL RED COLOR.

GENERAL NOTES:

1. CONCRETE TO BE CITY OF MIDLAND CLASS "A" WITH A MINIMUM 28 DAY COMPRESSION STRENGTH OF 3000 PSI. USE FIBER REINFORCED CONCRETE THROUGHOUT.
2. MATERIALS AND CONSTRUCTION METHODS TO CONFORM TO THE CITY OF MIDLAND STANDARDS AND SPECIFICATIONS UNLESS OTHERWISE DIRECTED BY ADA STANDARDS AND RESOURCES.

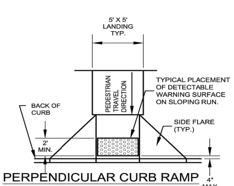

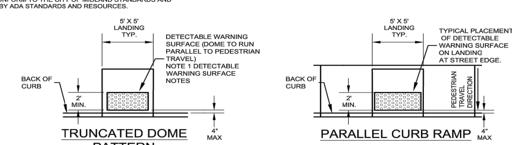

MIDLAND Engineering Services | DRAWN: DPM | CHECKED: JCF | APPROVED: MCC | EFFECTIVE DATE: 10/01/2018 | SCALE: NTS | DETAIL: 233

DETECTABLE WARNING SURFACE

SHEET C220 OF 19

PRELIMINARY REVIEW:

THESE PLANS ARE RELEASED UNDER THE SEAL OF ANDREW L. MELLEN, P.E. #106572 AND MAVERICK ENGINEERING (FIRM # F-15089) ON THIS DAY 05/14/2019, FOR THE PURPOSES OF INTERIM/PRELIMINARY REVIEW. THEY SHALL NOT BE USED FOR THE PURPOSES OF CONSTRUCTION.

PAVING DETAILS

FIRE STATION 11

LOT 01, BLOCK 01, LLANO COUNTRY ADDITION,
AN ADDITION TO THE CITY OF MIDLAND,
MIDLAND COUNTY, TEXAS.

DRAWN BY: CLB
CHECKED BY: ALM
APPROVED BY: ALM
DATE: 05/14/2019
JOB: 180218

Δ	REVISIONS	BY	APPR.	DATE

MAVERICK ENGINEERING
1909 West Wall Street, Suite "K"
Midland, Texas 79701 FIRM: F-15089
Tel: (432) 262-0999 Fax: (432) 262-0989
www.Maverick-Eng.com

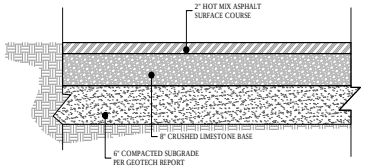

NOTES:

- INSTALL TXDOT TYPE "D" HOT MIX ASPHALTIC CONCRETE (a_c = 0.44). ASPHALT SHALL BE COMPACTED TO AT LEAST 93% OF THE RICE SPECIFIC GRAVITY.
- CRUSHED LIMESTONE BASE TO BE TX-DOT TYPE "A", GRADE 1 OR 2, COMPACTED TO AT LEAST 97% STANDARD PROCTOR DENSITY.
- SUBGRADE COMPACTED TO GEOTECH REPORT

1 ASPHALT PAVEMENT - MEDIUM DUTY
N.T.S.

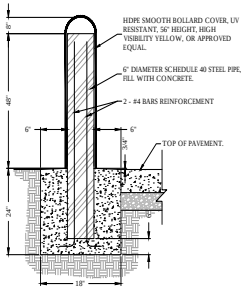

NOTES:

- CONCRETE IS TO BE 3,600 PSI COMPRESSIVE STRENGTH @ 28 DAYS, INCLUDING PIPE FILL MATERIAL.
- REINFORCEMENT IS TO BE GRADE 60 STEEL OR BETTER.

4 STANDARD BOLLARD DETAIL
N.T.S.

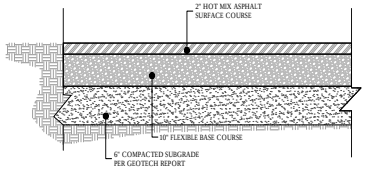

NOTES:

- INSTALL TXDOT ITEM 340/341 TYPE "D" HOT MIX ASPHALTIC CONCRETE WITH A MINIMUM PERFORMANCE GRADE BINDER OF PG64-22. SUBSTITUTE PG BINDERS MUST BE APPROVED BY THE ENGINEER.
- ASPHALT IS TO BE COMPACTED TO AT LEAST 98% PER ASTM D1557.
- FLEXIBLE BASE COURSE TO BE TX-DOT TYPE "A" (CRUSHED STONE, NO GRAVEL), GRADE 1-2.
- FLEXIBLE BASE COURSE TO BE COMPACTED TO AT LEAST 100% OF THE MAXIMUM DRY UNIT DENSITY PER TEX-113-E.
- SUBGRADE COMPACTED PER GEOTECH REPORT. IF GEOTECH IS NOT AVAILABLE, SCARIFY 6" AND COMPACT TO AT LEAST 100% OF THE MAXIMUM DRY UNIT DENSITY PER TEX-113-E.

7 ASPHALT PAVEMENT - HEAVY DUTY
N.T.S.

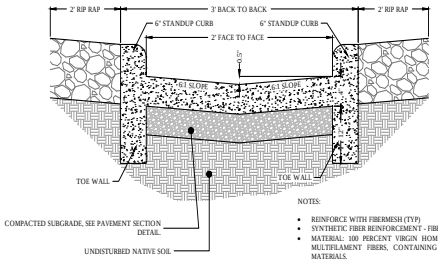

NOTES:

- REINFORCE WITH FIBERMESH (TYP)
- SYNTHETIC FIBER REINFORCEMENT - FIBERMESH 150
- MATERIAL: 100 PERCENT VIRGIN HOMOPOLYMER POLYPROPYLENE MULTIFILAMENT FIBERS, CONTAINING NO REPROCESSED OLEFIN MATERIALS.
- CONFORMANCE: ASTM C 1116, TYPE III.
- APPLICATION RATE: 1.5 POUNDS PER CUBIC YARD OF CONCRETE (OR APPROVED EQUAL)
- FLUME, TOE WALL, AND RIBBON CURBS TO BE CONSTRUCTED AS A MONOLITHIC UNIT.

8 FLUME WITH CURB WALLS
N.T.S.

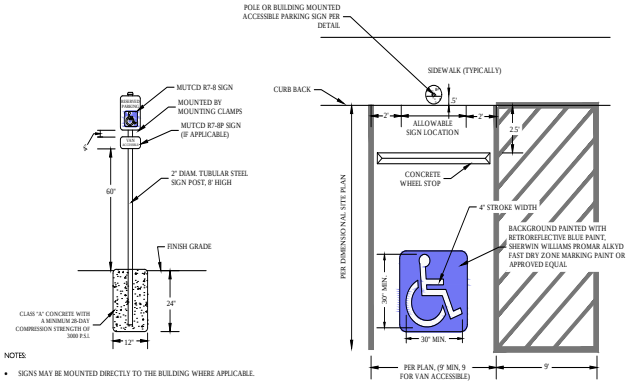

NOTES:

- SIGNS MAY BE MOUNTED DIRECTLY TO THE BUILDING WHERE APPLICABLE.

2 ACCESSIBLE SPACE MARKING
N.T.S.

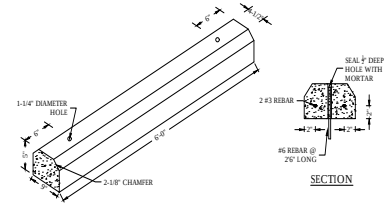

NOTES:

- 3,600 COMPRESSIVE STRENGTH @ 28 DAYS, REINFORCED WITH #3 BARS @ 16" ON CENTER.

3 CONCRETE WHEEL STOP
N.T.S.

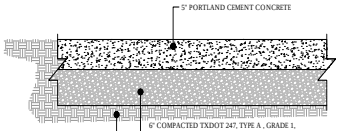

NOTES:

- 3,600 COMPRESSIVE STRENGTH @ 28 DAYS, REINFORCED WITH #3 BARS @ 16" ON CENTER.
- THE MAXIMUM CONTROL JOINT SPACING SHOULD BE HELD AT A RANGE FROM 24 TO 36 TIMES THE SLAB THICKNESS, WITH A MAXIMUM LENGTH TO WIDTH RATIO OF 1.5.

5 CONCRETE PAVEMENT - MEDIUM DUTY
N.T.S.

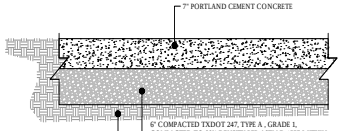

NOTES:

- 3,600 COMPRESSIVE STRENGTH @ 28 DAYS, REINFORCED WITH #3 BARS @ 16" ON CENTER.
- THE MAXIMUM CONTROL JOINT SPACING SHOULD BE HELD AT A RANGE FROM 24 TO 36 TIMES THE SLAB THICKNESS, WITH A MAXIMUM LENGTH TO WIDTH RATIO OF 1.5.

6 CONCRETE PAVEMENT - HEAVY DUTY
N.T.S.

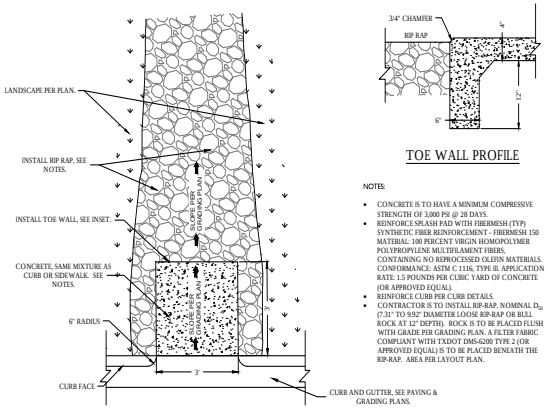

NOTES:

- CONCRETE IS TO HAVE A MINIMUM COMPRESSIVE STRENGTH OF 3,000 PSI @ 28 DAYS.
- REINFORCE SPLASH PAD WITH FIBERMESH (TYP) SYNTHETIC FIBER REINFORCEMENT - FIBERMESH 150 MATERIAL: 100 PERCENT VIRGIN HOMOPOLYMER POLYPROPYLENE MULTIFILAMENT FIBERS, CONTAINING NO REPROCESSED OLEFIN MATERIALS. CONFORMANCE: ASTM C 1116, TYPE III. APPLICATION RATE: 1.5 POUNDS PER CUBIC YARD OF CONCRETE (OR APPROVED EQUAL).
- REINFORCE CURB PER CURB DETAILS.
- CONTRACTOR IS TO INSTALL RIP-RAP, NOMINAL D_{50} (7.31" TO 9.92" DIAMETER LOOSE RIP-RAP OR BULL ROCK AT 12" DEPTH). ROCK IS TO BE PLACED FLUSH WITH GRADE PER GRADING PLAN. A FILTER FABRIC COMPLIANT WITH TXDOT DMS-6200 TYPE 2 (OR APPROVED EQUAL) IS TO BE PLACED BENEATH THE RIP-RAP. AREA PER LAYOUT PLAN.

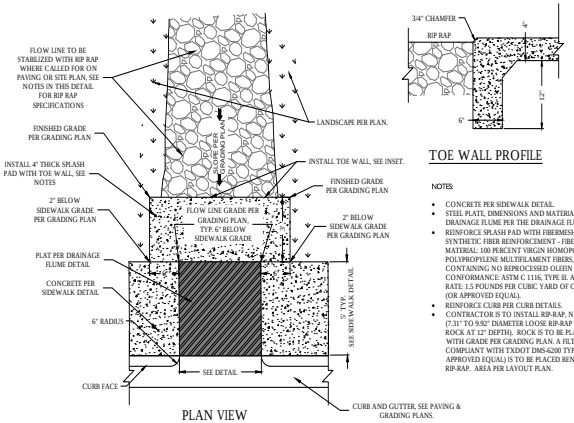

NOTES:

- CONCRETE PER SIDEWALK DETAIL.
- STEEL PLATE, DIMENSIONS AND MATERIALS FOR DRAINAGE FLUME PER THE DRAINAGE FLUME DETAIL.
- REINFORCE SPLASH PAD WITH FIBERMESH (TYP) SYNTHETIC FIBER REINFORCEMENT - FIBERMESH 150 MATERIAL: 100 PERCENT VIRGIN HOMOPOLYMER POLYPROPYLENE MULTIFILAMENT FIBERS, CONTAINING NO REPROCESSED OLEFIN MATERIALS. CONFORMANCE: ASTM C 1116, TYPE III. APPLICATION RATE: 1.5 POUNDS PER CUBIC YARD OF CONCRETE (OR APPROVED EQUAL).
- REINFORCE CURB PER CURB DETAILS.
- CONTRACTOR IS TO INSTALL RIP-RAP, NOMINAL D_{50} (7.31" TO 9.92" DIAMETER LOOSE RIP-RAP OR BULL ROCK AT 12" DEPTH). ROCK IS TO BE PLACED FLUSH WITH GRADE PER GRADING PLAN. A FILTER FABRIC COMPLIANT WITH TXDOT DMS-6200 TYPE 2 (OR APPROVED EQUAL) IS TO BE PLACED BENEATH THE RIP-RAP. AREA PER LAYOUT PLAN.

9 RIP RAP STABILIZED BASIN INLET
N.T.S.

10 STABILIZED LANDSCAPE OUTLET
N.T.S.

MAVERICK ENGINEERING
1909 West Wall Street, Suite "K"
Midland, Texas 79701
Tel: (432) 262-0999 Fax: (432) 262-0989
www.MaverickEngr.com
FIRM: F-15089

NO.	REVISIONS	BY	APPR.	DATE

DRAWN BY: CLB
CHECKED BY: ALM
APPROVED BY: ALM
DATE: 05/14/2019
JOB: 180218

PAVING DETAILS

FIRE STATION 11
LOT 01, BLOCK 01, LLANO COUNTRY ADDITION, AN ADDITION TO THE CITY OF MIDLAND, MIDLAND COUNTY, TEXAS.

PRELIMINARY REVIEW:

THESE PLANS ARE RELEASED UNDER THE SEAL OF ANDREW G. MILLIN, P.E. #108172 AND MAVERICK ENGINEERING (FIRM # F-15089) ON THIS DAY 05/14/2019, FOR THE PURPOSES OF INTERIM/PRELIMINARY REVIEW. THEY SHALL NOT BE USED FOR THE PURPOSES OF CONSTRUCTION.

SHEET C221 OF 19

F:\2018\180218-MARTINEZ, ARCHITECTS-FIRE STATION 11 CUMULTIPLE\DRAWINGS\CIVIL CONSTRUCTION PLANS\180218 C221 PAVING DETAILS.dwg

4.1351

© COPYRIGHT 2018 ALL RIGHTS RESERVED

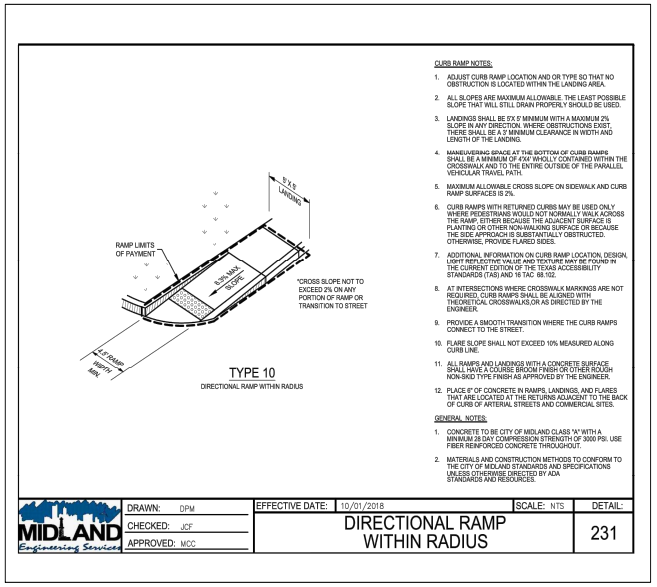

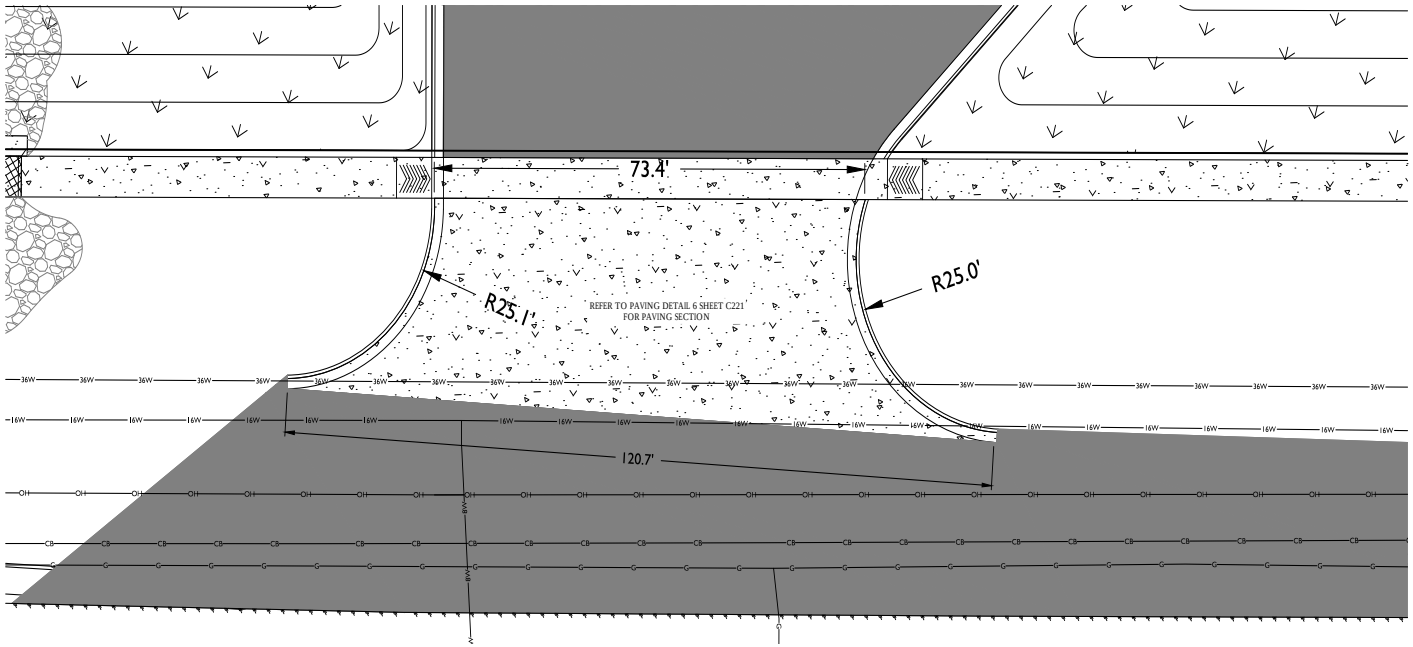

1 SOUTH DRIVEWAY DETAIL
N.T.S.

MAVERICK ENGINEERING
1909 West Wall Street, Suite "K"
Midland, Texas 79701
Tel: (432) 262-0993 Fax: (432) 262-0989
www.Maverick-Engr.com
FIRM: F-15089

NO.	BY	APPR.	DATE

REVISIONS

DRAWN BY: CLB
CHECKED BY: ALM
APPROVED BY: ALM
DATE: 05/14/2019
JOB: 180218

PAVING DETAILS

FIRE STATION 11
LOT 01, BLOCK 01, LLANO COUNTRY ADDITION,
AN ADDITION TO THE CITY OF MIDLAND,
MIDLAND COUNTY, TEXAS.

PRELIMINARY REVIEW:

THESE PLANS ARE RELEASED UNDER THE SEAL OF ANDREW L. MILLIN, P.E. #108172 AND MAVERICK ENGINEERING (FIRM # F-15089) ON THIS DAY 05/14/2019, FOR THE PURPOSES OF INTERIM/PRELIMINARY REVIEW. THEY SHALL NOT BE USED FOR THE PURPOSES OF CONSTRUCTION.

SHEET C222 OF 19

F:\2018\180218-MARTINEZ ARCHITECTS-FIRE STATION 11 CWE\3\DRAWINGS\CIVIL CONSTRUCTION PLANS 180218 C222 PAVING DETAILS.DWG
© COPYRIGHT 2018 ALL RIGHTS RESERVED

4.1352

Know what's below. Call before you dig.

LEGEND

- DENOTES FOUND MONUMENT AS NOTED
- DENOTES SET 1/2" IRON ROD W/PLASTIC CAP MARKED "CTLS"
- DENOTES TEMPORARY BENCHMARK
- DENOTES EXISTING FIRE HYDRANT
- DENOTES EXISTING WATER VALVE
- DENOTES EXISTING MANHOLE
- DENOTES EXISTING GUY ANCHOR
- DENOTES EXISTING POWER POLE
- DENOTES EXISTING CONTOUR
- DENOTES BOUNDARY LINE
- DENOTES SURROUNDING PROPERTY
- DENOTES EXISTING FLOODWAY
- DENOTES EDGE OF ASPHALT
- DENOTES EXISTING OVERHEAD ELECTRIC LINE
- DENOTES EXISTING FENCE
- DENOTES EXISTING GAS LINE
- DENOTES EXISTING UNDERGROUND CABLE LINE
- DENOTES EXISTING WATER LINE
- DENOTES EXISTING 6" WATER LINE
- DENOTES EXISTING 8" WATER LINE
- DENOTES EXISTING 16" WATER LINE
- DENOTES EXISTING 36" WATER LINE

FG FINISH GRADE ELEVATION
FL FLOW LINE ELEVATION
TC TOP OF CURB ELEVATION
GU GUTTER ELEVATION
EX EXSTING ELEVATION
FF FINISH FLOOR ELEVATION
SW SIDEWALK ELEVATION

GRADING NOTES:

- TYPICAL DROP OFF FROM FINISHED FLOOR TO TOP OF LANDSCAPE GRADE IS 3' UNLESS OTHERWISE NOTED.
- SIDEWALK / ADA PATH GRADES ARE NOT TO EXCEED 5.0% LONGITUDINALLY OR 2.0% TRANSVERSALLY.
- SLOPES SHOWN ARE TYPICALLY CALCULATED FROM THE GUTTER LIP GRADE. PLEASE NOTE THAT THIS IS DIFFERENT FROM THE ACTUAL GUTTER GRADE, WHISH IS SLIGHTLY LOWER THAN THE LIP. THE LIP IS GENERALLY 6 INCHES BELOW THE TOP OR BACK OR CURB UNLESS NOTED OTHERWISE.

MAVERICK ENGINEERING
1909 West Wall Street, Suite "K"
Midland, Texas 79701 TBPE#: F-15089
Tel: (432) 262-0993 Fax: (432) 262-0989
www.Maverick-Engr.com

NO.	REVISIONS	BY:	APPR.	DATE

DRAWN BY: CLB
CHECKED BY: ALM
APPROVED BY: ALM
DATE: 05/14/2019
JOB: 180218

GRADING PLAN

FIRE STATION 11

LOT 01, BLOCK 01, LLANO COUNTRY ADDITION,
AN ADDITION TO THE CITY OF MIDLAND,
MIDLAND COUNTY, TEXAS.

PRELIMINARY REVIEW:

THESE PLANS ARE RELEASED UNDER THE SEAL OF ANDREW L. MILLIN, P.E. #108172 AND MAVERICK ENGINEERING (FIRM # F-15089) ON THIS DAY 05/14/2019, FOR THE PURPOSES OF INTERIM/PRELIMINARY REVIEW. THEY SHALL NOT BE USED FOR THE PURPOSES OF CONSTRUCTION.

SHEET C230 OF 19

F:\2018\180218-MARTINEZ ARCHITECTS-FIRE STATION 11 CIVIL\3-DRAWINGS\CIVIL CONSTRUCTION PLANS 180218 C230 GRADING PLAN.DWG

© COPYRIGHT 2018 ALL RIGHTS RESERVED

4.1353

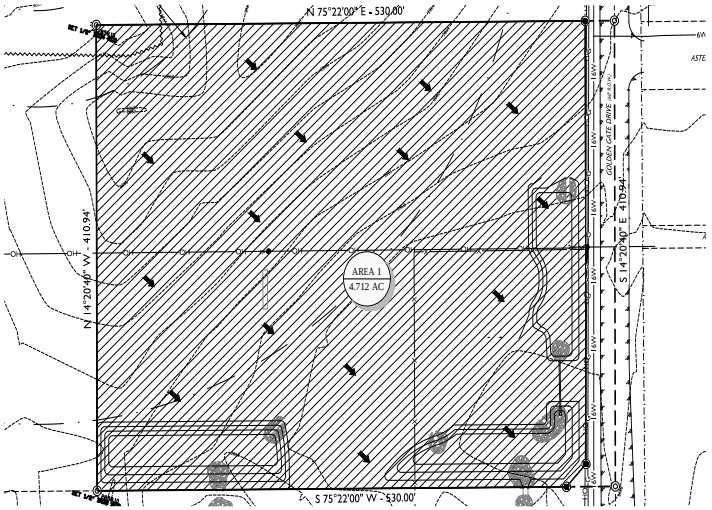

1 PRE-DEVELOPMENT CONDITIONS
N.T.S.

	Area (ac)	CN	Description
*	4.712	66	Natural western desert, HSG B, AMC 1.4
	4.712		100.00% Pervious Area

Tc (min)	Length (feet)	Slope (ft/ft)	Velocity (ft/sec)	Capacity (cfs)	Description
36.3	633		0.29		Direct Entry, CALCULATED SCS

Subcatchment 1S: Existing

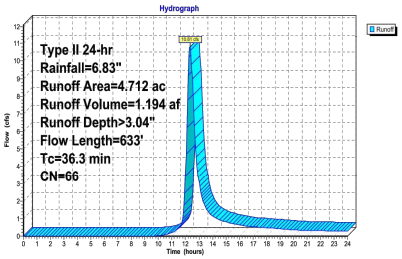

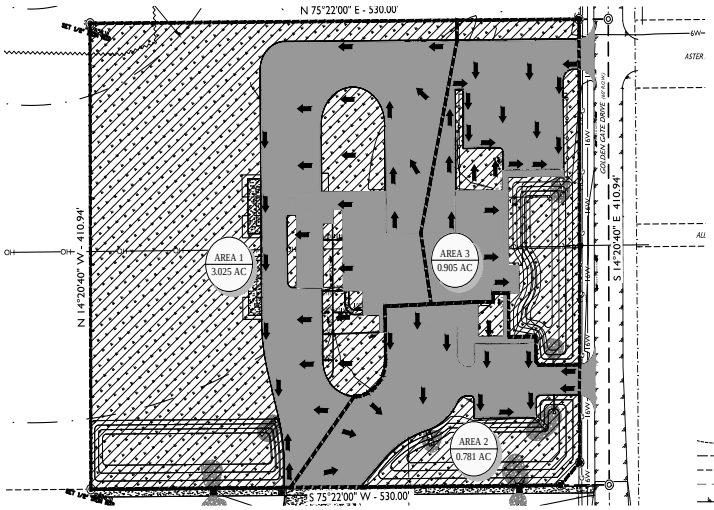

2 POST-DEVELOPMENT CONDITIONS
N.T.S.

LEGEND

- DENOTES FOUND MONUMENT AS NOTED
- DENOTES SET 1/2" IRON ROD W/PLASTIC CAP MARKED "CTLS"
- DENOTES TEMPORARY BENCHMARK
- DENOTES EXISTING FIRE HYDRANT
- DENOTES EXISTING WATER VALVE
- DENOTES EXISTING MANHOLE
- DENOTES EXISTING GUY ANCHOR
- DENOTES EXISTING POWER POLE
- 2850 DENOTES EXISTING CONTOUR
- DENOTES BOUNDARY LINE
- DENOTES SURROUNDING PROPERTY
- DENOTES EXISTING FLOODWAY
- DENOTES EDGE OF ASPHALT
- OH DENOTES EXISTING OVERHEAD ELECTRIC LINE
- DENOTES EXISTING FENCE
- G DENOTES EXISTING GAS LINE
- UE DENOTES EXISTING UNDERGROUND CABLE LINE
- W DENOTES EXISTING WATER LINE
- 6W DENOTES EXISTING 6" WATER LINE
- 8W DENOTES EXISTING 8" WATER LINE
- 16W DENOTES EXISTING 16" WATER LINE
- 36W DENOTES EXISTING 36" WATER LINE
- DENOTES WATERSHED BOUNDARY
- DENOTES DRAINAGE FLOW DIRECTION
- AREA 1 / 5.00 AC DENOTES WATERSHED ID / DENOTES WATERSHED AREA
- DENOTES IMPERVIOUS AREA
- DENOTES LANDSCAPE AREA

FEMA NOTE:

FLOOD STATEMENT: ACCORDING TO FEMA'S N.F.I.P. FLOOD INSURANCE RATE MAP #48329C0068F, DATED SEPTEMBER 16, 2005, THIS PROPERTY IS WITHIN THE UNSHADED PORTION OF ZONE "X", DESIGNATED AS "AREAS DETERMINED TO BE OUTSIDE THE 0.2% ANNUAL CHANCE FLOODPLAIN."

THIS FLOOD STATEMENT DOES NOT IMPLY THAT THE PROPERTY AND/OR THE STRUCTURES THEREON WILL BE FREE FROM FLOODING OR FLOOD DAMAGE. ON RARE OCCASIONS, GREATER FLOODS CAN AND WILL OCCUR AND FLOOD HEIGHTS MAY BE INCREASED BY MAN-MADE OR NATURAL CAUSES.

811 Know what's below. Call before you dig.

3 PRE-DEVELOPMENT HYDROGRAPH
N.T.S.

Area (sf)	CN	Description
40,076	98	Paved parking, HSG B
91,717	61	>75% Grass cover, Good, HSG B
131,793	72	Weighted Average
91,717		69.59% Pervious Area
40,076		30.41% Impervious Area

Tc (min)	Length (feet)	Slope (ft/ft)	Velocity (ft/sec)	Capacity (cfs)	Description
32.4	633		0.33		Direct Entry, CALCULATED SCS

Subcatchment 6S: Watershed Area 1

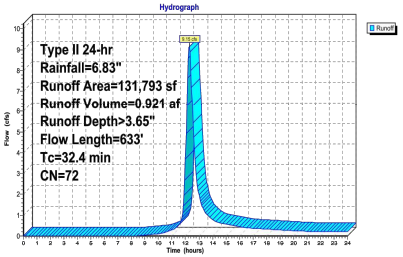

Area (sf)	CN	Description
20,903	98	Paved parking, HSG B
13,125	61	>75% Grass cover, Good, HSG B
34,028	84	Weighted Average
13,125		38.57% Pervious Area
20,903		61.43% Impervious Area

Tc (min)	Length (feet)	Slope (ft/ft)	Velocity (ft/sec)	Capacity (cfs)	Description
32.4	633		0.33		Direct Entry, CALCULATED SCS

Subcatchment 7S: Watershed Area 2

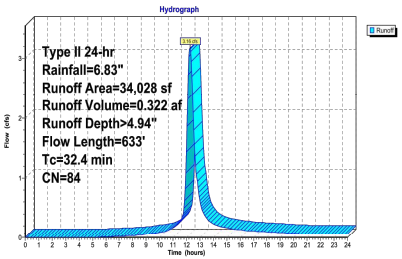

Area (sf)	CN	Description
22,527	98	Paved parking, HSG B
16,907	61	>75% Grass cover, Good, HSG B
39,434	82	Weighted Average
16,907		42.87% Pervious Area
22,527		57.13% Impervious Area

Tc (min)	Length (feet)	Slope (ft/ft)	Velocity (ft/sec)	Capacity (cfs)	Description
32.4	633		0.33		Direct Entry, CALCULATED SCS

Subcatchment 8S: Watershed Area 3

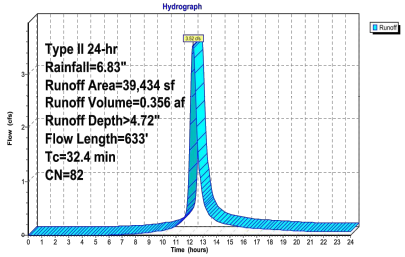

3 POST-DEVELOPMENT HYDROGRAPHS
N.T.S.

DRAINAGE NOTES:

- PRE-DEVELOPMENT WATERSHEDS: THE SITE WAS ANALYZED AS A SINGLE WATERSHED. THE EXISTING SITE IS CURRENTLY DRAINING TOWARDS THE EXISTING CITY RIGHT-OF-WAY. DRAINAGE AREA 1 WAS MODELED WITH A CURVE NUMBER OF 66, CONSISTING OF PERVIOUS NATURAL DESERT SURFACES, THIS RESULTS IN THE EXISTING PEAK DISCHARGE OF 10.81 CFS.
- POST-DEVELOPMENT WATERSHEDS: THE SITE WAS ANALYZED AS 3 WATERSHEDS. DRAINAGE AREA 1 WAS MODELED WITH A WEIGHTED CURVE NUMBER OF 72, BEING A MIX OF IMPERVIOUS AND LANDSCAPE SURFACES. DRAINAGE AREA 1 HAS A PEAK DISCHARGE OF 9.15 CFS. DRAINAGE AREA 2 WAS MODELED WITH A WEIGHTED CURVE NUMBER OF 84, BEING A MIX OF IMPERVIOUS AND LANDSCAPE SURFACES. DRAINAGE AREA 2 HAS A PEAK DISCHARGE OF 3.16 CFS. DRAINAGE AREA 3 WAS MODELED WITH A WEIGHTED CURVE NUMBER OF 82, BEING A MIX OF IMPERVIOUS AND LANDSCAPE SURFACES. DRAINAGE AREA 3 HAS A PEAK DISCHARGE OF 3.52 CFS. THIS REPRESENTS AN INCREASE OF 5.02 CFS OVER EXISTING CONDITIONS. TOTAL PEAK DISCHARGE FOR POST DEVELOPMENT IS 15.83 CFS.
- DRAINAGE AREA IMPROVEMENTS: DISCHARGE FROM DRAINAGE AREA 1 IS REDUCED FROM FROM 9.15 CFS TO 1.41 CFS. DISCHARGE FROM DRAINAGE AREA 2 IS REDUCED FROM FROM 3.16 CFS TO 1.44 CFS. DISCHARGE FROM DRAINAGE AREA 3 IS REDUCED FROM FROM 3.52 CFS TO 2.40 CFS.
- SOIL TYPE: WEBSOILSURVEY REPORTS THE SOILS IN THIS AREA TO BE PRIMARILY AMARILLO FIND SANDY LOAM (HYDROLOGIC SOIL GROUP B).
- LANDSCAPE %: THE LANDSCAPE PERCENTAGE WAS CALCULATED USING THE SITE AREA MINUS THE BUILDING FOOT PRINT. THE LANDSCAPE PERCENTAGE WAS FOUND TO BE APPROXIMATELY 59.31% OF THIS AREA.
- TIME OF CONCENTRATION: FOR PRE DEVELOPMENT FLOW THE TIME OF CONCENTRATION WAS CALCULATED TO BE 36.3 MINUTES. FOR POST DEVELOPMENT FLOW THE TIME OF CONCENTRATION WAS CALCULATED TO BE 32.4 MINUTES.
- DRAINAGE CALCULATIONS WERE PERFORMED WITH HYDROCAD SOFTWARE.
- RAINFALL DEPTH DURATION WAS TAKEN FROM TABLE 4-10 IN THE CITY OF MIDLAND DRAINAGE MANUAL, PAGE 4-32, DATED 6/92. (6.83 IN., 100YR, 24 HR STORM)

MAVERICK ENGINEERING
1909 West Wall Street, Suite "K"
Midland, Texas 79701 TBPE# F-15089
Tel: (432) 262-0999 Fax: (432) 262-0989
www.Maverick-Engr.com

NO.	REVISIONS	DATE
1		
2		
3		
4		

DRAWN BY: CLB
CHECKED BY: ALM
APPROVED BY: ALM
DATE: 05/14/2019
JOB: 180218

DRAINAGE PLAN PRE VS POST
FIRE STATION 11
LOT 01, BLOCK 01, LLANO COUNTRY ADDITION, AN ADDITION TO THE CITY OF MIDLAND, MIDLAND COUNTY, TEXAS.

PRELIMINARY REVIEW:
THESE PLANS ARE RELEASED UNDER THE SEAL OF ANDREW L. MILLIN, P.E. #108172 AND MAVERICK ENGINEERING (FIRM # F-15089) ON THIS DAY 05/14/2019, FOR THE PURPOSES OF INTERIM/PRELIMINARY REVIEW. THEY SHALL NOT BE USED FOR THE PURPOSES OF CONSTRUCTION.

SHEET C240 OF 19

4.1354

© COPYRIGHT 2018 ALL RIGHTS RESERVED

F:\2018\180218-MARTINEZ_ARCHITECTS-FIRE STATION 11 CMS\3D\DRAWINGS\CIVIL CONSTRUCTION PLANS 180218 C240 DRAINAGE PLAN.DWG

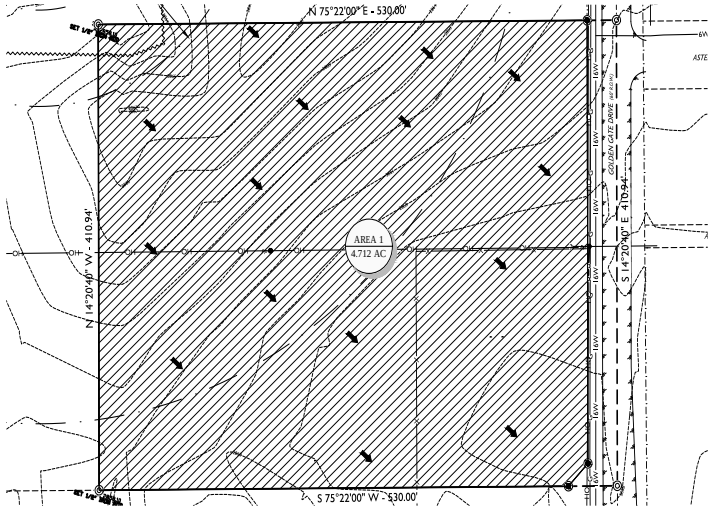

1 PRE-DEVELOPMENT CONDITIONS
N.T.S.

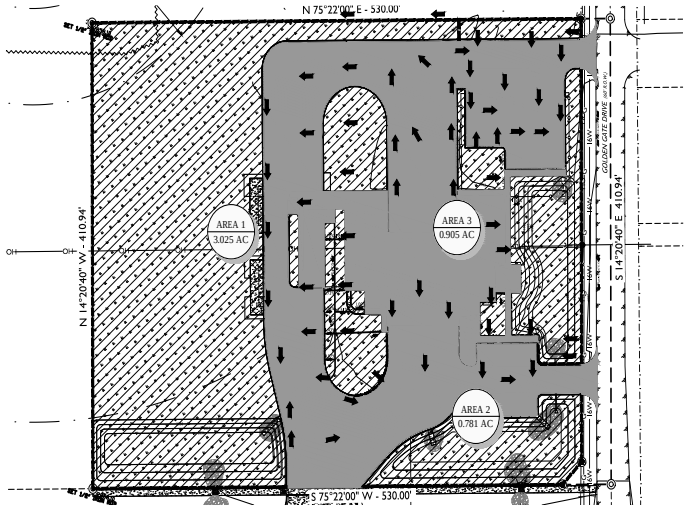

2 POST-DEVELOPMENT CONDITIONS
N.T.S.

Area (sf)	CN	Description
40,076	98	Paved parking, HSG B
91,717	61	>75% Grass cover, Good, HSG B
131,793	72	Weighted Average
91,717		69.59% Pervious Area
40,076		30.41% Impervious Area

Tc (min)	Length (feet)	Slope (ft/ft)	Velocity (ft/sec)	Capacity (cfs)	Description
32.4	633		0.33		Direct Entry, CALCULATED SCS

Subcatchment 6S: Watershed Area 1

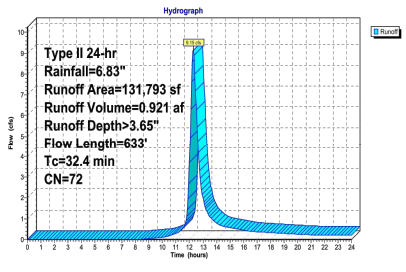

Area (sf)	CN	Description
20,903	98	Paved parking, HSG B
13,125	61	>75% Grass cover, Good, HSG B
34,028	84	Weighted Average
13,125		38.57% Pervious Area
20,903		61.43% Impervious Area

Tc (min)	Length (feet)	Slope (ft/ft)	Velocity (ft/sec)	Capacity (cfs)	Description
32.4	633		0.33		Direct Entry, CALCULATED SCS

Subcatchment 7S: Watershed Area 2

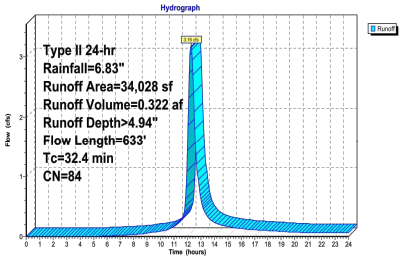

Area (sf)	CN	Description
22,527	98	Paved parking, HSG B
16,907	61	>75% Grass cover, Good, HSG B
39,434	82	Weighted Average
16,907		42.87% Pervious Area
22,527		57.13% Impervious Area

Tc (min)	Length (feet)	Slope (ft/ft)	Velocity (ft/sec)	Capacity (cfs)	Description
32.4	633		0.33		Direct Entry, CALCULATED SCS

Subcatchment 8S: Watershed Area 3

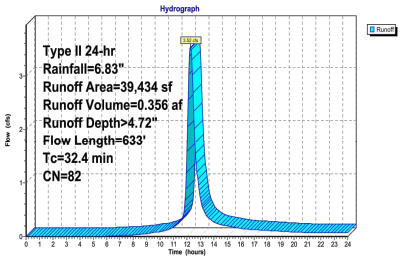

3 POST-DEVELOPMENT HYDROGRAPHS
N.T.S.

Pond 3P: Southwest Basin

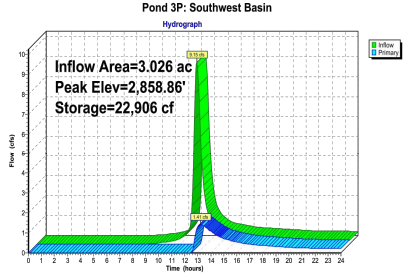

Pond 9P: Southeast Basin

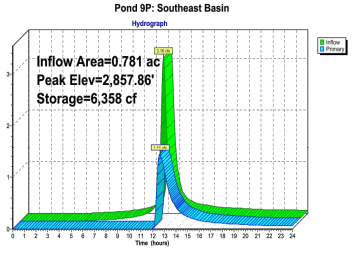

Pond 10P: East Basin

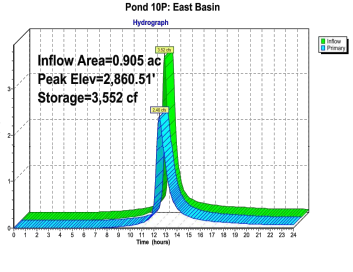

4 POST-DEVELOPMENT BASIN HYDROGRAPHS
N.T.S.

LEGEND

- DENOTES FOUND MONUMENT AS NOTED
- DENOTES SET 1/2" IRON ROD W/PLASTIC CAP MARKED "CTLS"
- DENOTES TEMPORARY BENCHMARK
- DENOTES EXISTING FIRE HYDRANT
- DENOTES EXISTING WATER VALVE
- DENOTES EXISTING MANHOLE
- DENOTES EXISTING GUY ANCHOR
- DENOTES EXISTING POWER POLE
- 2850 DENOTES EXISTING CONTOUR
- DENOTES BOUNDARY LINE
- DENOTES SURROUNDING PROPERTY
- DENOTES EXISTING FLOODWAY
- DENOTES EDGE OF ASPHALT
- OH DENOTES EXISTING OVERHEAD ELECTRIC LINE
- DENOTES EXISTING FENCE
- G DENOTES EXISTING GAS LINE
- CB DENOTES EXISTING UNDERGROUND CABLE LINE
- W DENOTES EXISTING WATER LINE
- 6W DENOTES EXISTING 6" WATER LINE
- 8W DENOTES EXISTING 8" WATER LINE
- 16W DENOTES EXISTING 16" WATER LINE
- 36W DENOTES EXISTING 36" WATER LINE
- DENOTES WATERSHED BOUNDARY
- DENOTES DRAINAGE FLOW DIRECTION
- AREA 1 / 5.00 AC DENOTES WATERSHED ID / DENOTES WATERSHED AREA
- DENOTES IMPERVIOUS AREA
- DENOTES LANDSCAPE AREA

811 Know what's below. Call before you dig.

DRAINAGE NOTES:

- PRE-DEVELOPMENT WATERSHEDS: THE SITE WAS ANALYZED AS A SINGLE WATERSHED. THE EXISTING SITE IS CURRENTLY DRAINING TOWARDS THE EXISTING CITY RIGHT-OF-WAY. DRAINAGE AREA 1 WAS MODELED WITH A CURVE NUMBER OF 66. CONSISTING OF PERVIOUS NATURAL DESERT SURFACES, THIS RESULTS IN THE EXISTING PEAK DISCHARGE OF 10.81 CFS.
- POST-DEVELOPMENT WATERSHEDS: THE SITE WAS ANALYZED AS 3 WATERSHEDS. DRAINAGE AREA 1 WAS MODELED WITH A WEIGHTED CURVE NUMBER OF 72, BEING A MIX OF IMPERVIOUS AND LANDSCAPE SURFACES. DRAINAGE AREA 1 HAS A PEAK DISCHARGE OF 9.15 CFS. DRAINAGE AREA 2 WAS MODELED WITH A WEIGHTED CURVE NUMBER OF 84, BEING A MIX OF IMPERVIOUS AND LANDSCAPE SURFACES. DRAINAGE AREA 2 HAS A PEAK DISCHARGE OF 3.16 CFS. DRAINAGE AREA 3 WAS MODELED WITH A WEIGHTED CURVE NUMBER OF 82, BEING A MIX OF IMPERVIOUS AND LANDSCAPE SURFACES. DRAINAGE AREA 3 HAS A PEAK DISCHARGE OF 3.52 CFS. THIS REPRESENTS AN INCREASE OF 5.02 CFS OVER EXISTING CONDITIONS. TOTAL PEAK DISCHARGE FOR POST DEVELOPMENT IS 15.83 CFS.
- DRAINAGE AREA IMPROVEMENTS: DISCHARGE FROM DRAINAGE AREA 1 IS REDUCED FROM FROM 9.15 CFS TO 1.41 CFS. DISCHARGE FROM DRAINAGE AREA 2 IS REDUCED FROM FROM 3.16 CFS TO 1.44 CFS. DISCHARGE FROM DRAINAGE AREA 3 IS REDUCED FROM FROM 3.52 CFS TO 2.40 CFS.
- SOIL TYPE: WEBSOILSURVEY REPORTS THE SOILS IN THIS AREA TO BE PRIMARILY AMARILLO FIND SANDY LOAM (HYDROLOGIC SOIL GROUP B).
- LANDSCAPE %: THE LANDSCAPE PERCENTAGE WAS CALCULATED USING THE SITE AREA MINUS THE BUILDING FOOT PRINT. THE LANDSCAPE PERCENTAGE WAS FOUND TO BE APPROXIMATELY 59.31% OF THIS AREA.
- TIME OF CONCENTRATION: FOR PRE DEVELOPMENT FLOW THE TIME OF CONCENTRATION WAS CALCULATED TO BE 36.3 MINUTES. FOR POST DEVELOPMENT FLOW THE TIME OF CONCENTRATION WAS CALCULATED TO BE 32.4 MINUTES.
- DRAINAGE CALCULATIONS WERE PERFORMED WITH HYDROCAD SOFTWARE.
- RAINFALL DEPTH DURATION WAS TAKEN FROM TABLE 4-10 IN THE CITY OF MIDLAND DRAINAGE MANUAL, PAGE 4-32, DATED 6/92. (6.83 IN., 100YR, 24 HR STORM)

FEMA NOTE:

FLOOD STATEMENT: ACCORDING TO FEMA'S N.F.I.P. FLOOD INSURANCE RATE MAP #48329C0068F, DATED SEPTEMBER 16, 2005, THIS PROPERTY IS WITHIN THE UNSHADED PORTION OF ZONE "X", DESIGNATED AS "AREAS DETERMINED TO BE OUTSIDE THE 0.2% ANNUAL CHANCE FLOODPLAIN."

THIS FLOOD STATEMENT DOES NOT IMPLY THAT THE PROPERTY AND/OR THE STRUCTURES THEREON WILL BE FREE FROM FLOODING OR FLOOD DAMAGE. ON RARE OCCASIONS, GREATER FLOODS CAN AND WILL OCCUR AND FLOOD HEIGHTS MAY BE INCREASED BY MAN-MADE OR NATURAL CAUSES.

MAVERICK ENGINEERING
1909 West Wall Street, Suite "K"
Midland, Texas 79701 FIRM: F-15089
Tel: (432) 262-0999 Fax: (432) 262-0989
www.Maverick-Engr.com

NO.	REVISIONS	BY	APPR.	DATE
1				

DRAWN BY: CLB
CHECKED BY: ALM
APPROVED BY: ALM
DATE: 05/14/2019
JOB: 180218

DRAINAGE PLAN - BASINS
FIRE STATION 11
LOT 01, BLOCK 01, LLANO COUNTRY ADDITION, AN ADDITION TO THE CITY OF MIDLAND, MIDLAND COUNTY, TEXAS.

PRELIMINARY REVIEW:

THESE PLANS ARE RELEASED UNDER THE SEAL OF ANDREW L. MILLIN, P.E. #108172 AND MAVERICK ENGINEERING (FIRM # F-15089) ON THIS DAY 05/14/2019, FOR THE PURPOSES OF INTERIM/PRELIMINARY REVIEW. THEY SHALL NOT BE USED FOR THE PURPOSES OF CONSTRUCTION.

SHEET C241 OF 19

4.1355

© COPYRIGHT 2018 ALL RIGHTS RESERVED

F:\2018\180218-MARTINEZ, ARCHITECTS-FIRE STATION 11 CIVIL\3-DRAWINGS\CIVIL CONSTRUCTION PLANS 180218 C241 DRAINAGE PLAN - BASINS.DWG

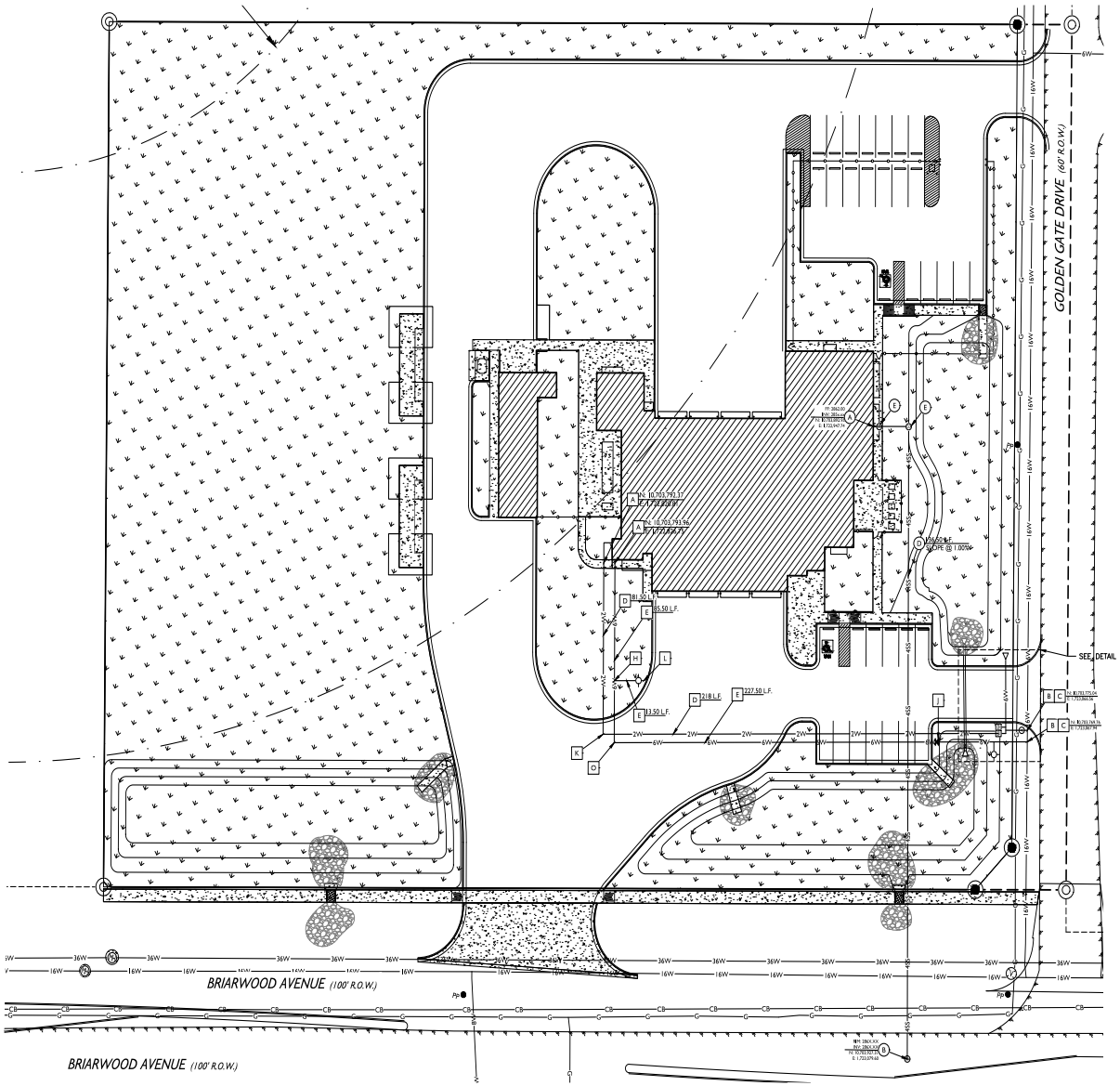

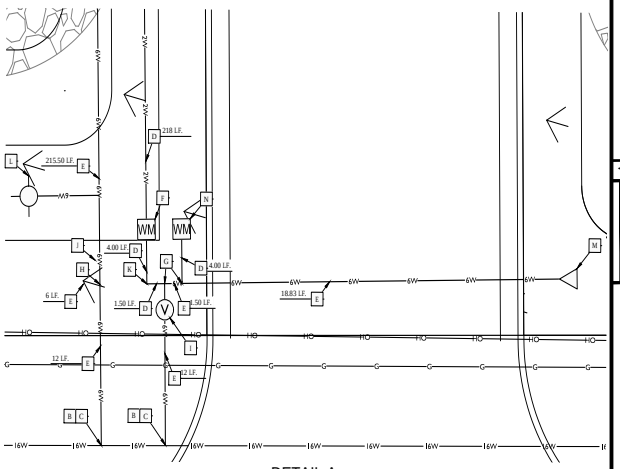

DETAIL A
SCALE 1:5

LEGEND

- DENOTES FOUND MONUMENT AS NOTED
- DENOTES SET 1/2" IRON ROD W/PLASTIC CAP MARKED "CTLS"
- DENOTES TEMPORARY BENCHMARK
- DENOTES EXISTING FIRE HYDRANT
- DENOTES EXISTING WATER VALVE
- DENOTES EXISTING MANHOLE
- DENOTES EXISTING GUY ANCHOR
- DENOTES EXISTING POWER POLE
- DENOTES EXISTING CONTOUR
- DENOTES BOUNDARY LINE
- DENOTES SURROUNDING PROPERTY
- DENOTES EXISTING FLOODWAY
- DENOTES EDGE OF ASPHALT
- DENOTES EXISTING OVERHEAD ELECTRIC LINE
- DENOTES EXISTING FENCE
- DENOTES EXISTING GAS LINE
- DENOTES EXISTING UNDERGROUND CABLE LINE
- DENOTES EXISTING WATER LINE
- DENOTES EXISTING 6" WATER LINE
- DENOTES EXISTING 8" WATER LINE
- DENOTES EXISTING 16" WATER LINE
- DENOTES EXISTING 36" WATER LINE
- DENOTES PROPOSED FIRE HYDRANT
- DENOTES PROPOSED POST INDICATOR VALVE
- DENOTES PROPOSED IRRIGATION METER
- DENOTES PROPOSED WATER METER
- DENOTES PROPOSED WATER VALVE
- DENOTES PROPOSED SEWER CLEANOUT
- DENOTES PROPOSED SEWER MANHOLE
- DENOTES PROPOSED PLUG
- DENOTES PROPOSED GAS METER
- DENOTES PROPOSED 2" WATER LINE
- DENOTES PROPOSED 6" WATER LINE
- DENOTES PROPOSED 4" SEWER LINE
- DENOTES PROPOSED FIRE LINE

ENGINEER'S UTILITY NOTES:

- CONTRACTOR TO VERIFY ALL EXISTING UTILITY TIE-IN CONNECTIONS AND VERIFY LOCATION AND ELEVATION PRIOR TO CONSTRUCTION.
- CONTRACTOR TO BUILD SEWER FROM TIE-IN POINT (A.K.A. DOWNHILL) AND PROCEED UPHILL.
- CITY OF MIDLAND TO BE NOTIFIED 48 HOURS BEFORE ANY CONSTRUCTION BEGINS.
- PIPE DEFLECTION IS TO BE PER MANUFACTURER'S RECOMMENDATIONS OR PER CITY REQUIREMENTS, WHICHEVER ALLOWS THE LESSER AMOUNT OF DEFLECTION.
- ALL UTILITIES TO BE INSTALLED PER TEXAS ADMINISTRATIVE CODE (TAC) STANDARD SEPARATION SPECIFICATIONS.
- A TWO (2) FOOT MINIMUM VERTICAL SEPARATION IS TO BE PROVIDED BETWEEN ANY SEWER MAIN/LINE CROSSING A WATER MAIN/LINE.
- EXCEPTIONS OR DEVIATIONS FROM THE ABOVE MINIMUM CLEARANCES MUST BE APPROVED AND SHOWN ON THE APPROVED WATER AND SEWER PLANS. WHEN UTILITY CONFLICTS ARE FOUND DURING CONSTRUCTION, ALL CHANGES AND REVISIONS MUST BE PRECEDED BY AN APPROVED PLAN REVISION,
- ANY AND ALL MORE STRINGENT REQUIREMENTS REQUIRED BY FEDERAL, STATE, COUNTY OR LOCAL CODES OR ORDINANCES TAKE PRECEDENCE.
- ALL CONSTRUCTION IN THE RIGHT OF WAY IS TO CONFORM TO THE CITY OF MIDLAND STANDARDS.
- ALL CONSTRUCTION ON SITE IS TO CONFORM TO MAVERICK ENGINEERING NOTES AND DETAIL SHEETS.
- CONCRETE OR ASPHALT DAMAGED DURING THE COURSE OF CONSTRUCTION IS TO BE REMOVED AND REPLACED WITH LIKE MATERIALS TO THE SATISFACTION OF THE ENGINEER OR THE CITY OF MIDLAND PRIOR TO FINAL INSPECTION.
- SANITARY SEWER IS TO BE PVC-SDR-35 UNLESS NOTED OTHERWISE.
- WATER IS TO BE C-900 PVC PIPE UNLESS NOTED OTHERWISE.
- THE CONTRACTOR IS TO PROVIDE ALL THRUST BLOCKING AT ALL FITTINGS AND BENDS AS REQUIRED. COMPLY WITH DETAILS IN THE CITY OF MIDLAND'S DESIGN & CONSTRUCTION STANDARDS.
- THE CONTRACTOR IS TO KEEP ALL EXISTING WATER AND SEWER MAINS IN SERVICE DURING CONSTRUCTION.
- ANY PROPOSED GAS LINES SHOWN ARE FOR SCHEMATIC PLANNING PURPOSES ONLY. ACTUAL GAS LINE ROUTES ARE TO BE NEGOTIATED BETWEEN THE CONTRACTOR AND THE GAS UTILITY PROVIDER. MAVERICK ENGINEERING DOES NOT ENGAGE IN GAS LINE DESIGN. PLEASE CONSULT WITH YOUR M.E.P. PLAN PROVIDER AND GAS UTILITY PROVIDER FOR GAS LINE DESIGN.

UTILITY SEWER NOTES:

TYP. A. SEE M.E.P. PLANS FOR CONTINUATION.

B. INSTALL MANHOLE PER CITY OF MIDLAND DETAILS 313(A) & 313(B)

C. CONTRACTOR TO VERIFY UTILITY SIZE, LOCATION, ELEVATION AND TYPE PRIOR TO CONSTRUCTION AND INFORM ENGINEER OF CONFLICTS.

D. CONSTRUCT 4" DIAMETER SEWER SERVICE LINE. LENGTH AND SLOPE OF LINE PER PLANS. LINE IS TO BE SDR-35 OR APPROVED EQUAL. TRENCHING AND BEDDING PER CITY OF MIDLAND DETAILS 310(A) & 310(B) ON SHEET C320.

E. INSTALL TWO WAY (DOUBLE) CLEANOUT PER DETAIL 01 ON SHEET C320.

UTILITY WATER NOTES:

TYP. A. SEE M.E.P. PLANS FOR CONTINUATION. CONTRACTOR TO VERIFY LOCATION PRIOR TO CONSTRUCTION.

B. CONTRACTOR TO VERIFY UTILITY SIZE, LOCATION, ELEVATION AND TYPE PRIOR TO CONSTRUCTION AND INFORM ENGINEER OF CONFLICTS.

C. INSTALL 16X6" TAPPING SLEEVE AND VALVE PER CITY OF MIDLAND DETAIL 602 ON SHEET 310.

D. CONSTRUCT 2" DIAMETER WATER SERVICE LINE AS SHOWN. LENGTH OF LINE PER PLANS. LINE IS TO BE SCHEDULE 40 PVC OR APPROVED EQUAL. TRENCHING AND BEDDING PER CITY OF MIDLAND DETAIL 310 (A&B) ON SHEET 310.

E. CONSTRUCT 6" DIAMETER FIRE SERVICE LINE AS SHOWN. LENGTH OF LINE PER PLANS. LINE IS TO BE C-900 DR14 OR APPROVED EQUAL. TRENCHING AND BEDDING PER CITY OF MIDLAND DETAIL CITY OF MIDLAND DETAILS F03(A) & F03(B) ON SHEET C311.

F. INSTALL 2" WATER METER PER CITY OF MIDLAND DETAILS 604(A) & 604(B) ON SHEET C310.

G. CONSTRUCT 6"x2" REDUCING TEE WITH THRUST BLOCKING PER CITY OF MIDLAND DETAIL 615 ON SHEET C311.

H. CONSTRUCT 6"x6" TEE WITH THRUST BLOCKING PER CITY OF MIDLAND DETAIL 615 ON SHEET C311

I. INSTALL 6" GATE VALVE PER CITY OF MIDLAND DETAILS 608(A) & 608(B) ON SHEET C310.

J. INSTALL POST INDICATOR VALVE PER CITY OF MIDLAND DETAIL F01 ON SHEET C311.

K. CONSTRUCT 2" 90° BEND WITH RESTRAINED JOINT SYSTEM ON EACH END (PRIVATE UTILITY) / THRUST BLOCKING PER CITY OF MIDLAND DETAIL 616 ON SHEET C311 (PUBLIC UTILITY).

L. INSTALL FIRE HYDRANT WITH VALVE PER CITY OF MIDLAND DETAIL 603 ON SHEET C310.

M. INSTALL 2" CAP WITH THRUST BLOCKING PER CITY OF MIDLAND DETAIL 617 ON SHEET C310

N. INSTALL 2" IRRIGATION METER PER CITY OF MIDLAND DETAILS 604(A) AND 604(B) ON SHEET C310.

O. CONSTRUCT 6' 90° BEND WITH RESTRAINED JOINT SYSTEM ON EACH END (PRIVATE UTILITY) / THRUST BLOCKING PER CITY OF MIDLAND DETAIL 616 ON SHEET C311 (PUBLIC UTILITY).

MAVERICK ENGINEERING
1909 West Wall Street, Suite "K"
Midland, Texas 79701 FIRM: F-15089
Tel: (432) 262-0993 Fax: (432) 262-0989
www.Maverick-Engr.com

NO.	BY:	APPR.	DATE

REVISIONS

DRAWN BY: CLB
CHECKED BY: ALM
APPROVED BY: ALM
DATE: 05/14/2019
JOB: 180218

UTILITY PLAN

FIRE STATION 11
LOT 01, BLOCK 01, LLANO COUNTRY ADDITION,
AN ADDITION TO THE CITY OF MIDLAND,
MIDLAND COUNTY, TEXAS.

PRELIMINARY REVIEW:
THESE PLANS ARE RELEASED UNDER THE SEAL OF ANDREW L. MELLIN, P.E. #108172 AND MAVERICK ENGINEERING (FIRM # F-15089) ON THIS DAY 05/14/2019, FOR THE PURPOSES OF INTERIM/PRELIMINARY REVIEW. THEY SHALL NOT BE USED FOR THE PURPOSES OF CONSTRUCTION.

SHEET C300 OF 19

F:\2018\180218-MARTINEZ_ARCHITECTS-FIRE STATION 11 CMS\3-DRAWINGS\CIVIL CONSTRUCTION PLANS\180218 C300 UTILITY PLAN.DWG
© COPYRIGHT 2018 ALL RIGHTS RESERVED

4.1356

© COPYRIGHT 2018 ALL RIGHTS RESERVED

F:\2018\180218-MARTINEZ ARCHITECTS-FIRE STATION 11 CIVIL\DRAWINGS\CIVIL CONSTRUCTION PLANS\180218 C310 WATER DETAILS.DWG

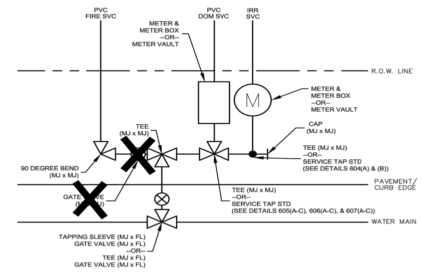

NOTES:

1. MATERIALS AND CONSTRUCTION METHODS TO CONFORM TO CITY OF MIDLAND STANDARDS AND SPECIFICATIONS.
2. CONSTRUCT AS SHOWN UNLESS OTHERWISE APPROVED IN WRITING BY THE CITY ENGINEER.

MIDLAND Engineering Services | DRAWN: DPM | CHECKED: JCF | APPROVED: MCC | EFFECTIVE DATE: 10/01/2018 | SCALE: | DETAIL: 602

STANDARD MULTI-FAMILY & COMMERCIAL WATER SERVICE MANIFOLD

CROSS FITTING RESTRAINTS / TEE FITTING RESTRAINTS / FIRE HYDRANT RESTRAINTS

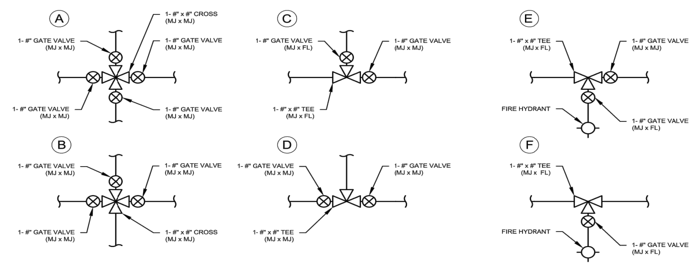

NOTES:

1. ALL MECHANICAL JOINT (MJ) FITTINGS TO BE RESTRAINED.
2. ALL FLANGES (FL) TO BE ON THE BRANCH SIDE OF TEE FITTINGS.
3. MATERIALS AND CONSTRUCTION METHODS TO CONFORM TO CITY OF MIDLAND STANDARDS AND SPECIFICATIONS.
4. CONSTRUCT AS SHOWN UNLESS OTHERWISE APPROVED IN WRITING BY THE CITY ENGINEER.

MIDLAND Engineering Services | DRAWN: DPM | CHECKED: JCF | APPROVED: MCC | EFFECTIVE DATE: 10/01/2018 | SCALE: NTS | DETAIL: 601

TYPICAL FITTING RESTRAINT CONFIGURATIONS

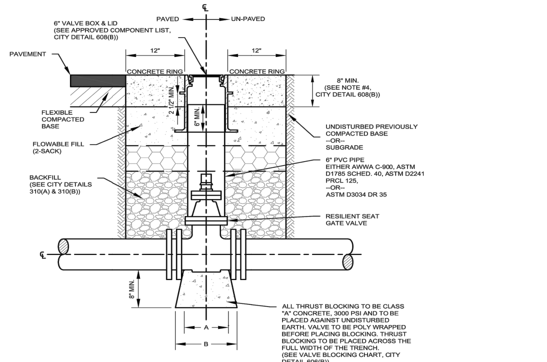

MIDLAND Engineering Services | DRAWN: DPM | CHECKED: JCF | APPROVED: MCC | EFFECTIVE DATE: 10/01/2018 | SCALE: NTS | DETAIL: 608(A)

TYPICAL VALVE AND VALVE BOX

NOTES:

1. SET ALL VALVE BOXES IN A CONCRETE COLLAR WHEN PLACED AT THEIR FINAL GRADE. (SEE CITY DETAILS 608(A) & (B))
2. ALL CONCRETE PAVEMENT TO BE CLASS "C" CONCRETE, 3600 PSI.
3. LEAVE VALVE BOX 6" TO 10" ABOVE GRADE FOR NEW DEVELOPMENT AND OTHER STREETS AND ALLEYS SCHEDULED FOR IMMEDIATE PAVING UNTIL STREET WORK IS DONE. PAVING CONTRACTOR TO ADJUST VALVE BOX TO FINISHED GRADE BEFORE PLACING LAST COURSE OF HMAC SURFACE.
4. SET FRANGIBLE FLANGE OF FIRE HYDRANT A MINIMUM OF 2" AND A MAXIMUM OF 6" ABOVE SIDEWALK ELEVATION.
5. ON STREETS WHERE NO SIDEWALK IS TO BE CONSTRUCTED, SET CENTERLINE OF FIRE-HYDRANT AT 3' FROM PROPERTY LINE WITHIN RIGHT OF WAY.
6. PLACE FIRE HYDRANT CUT-OFF VALVE A MINIMUM OF 3' FROM THE CENTER LINE OF THE FIRE HYDRANT. THIS MAY REQUIRE THE USE OF A 90° BEND TO OFFSET THE FIRE HYDRANT.
7. SHAPE CONCRETE THRUST BLOCKS SO THAT NO WATER DRAINS ARE BLOCKED.
8. A TEE FITTING IS REQUIRED FOR A CONNECTION TO A NEW WATER MAIN, AND A TAPPING SLEEVE IS REQUIRED FOR A CONNECTION TO AN EXISTING WATER MAIN.
9. DO NOT WRAP FIRE HYDRANT SHOE IN PLASTIC.
10. MATERIALS AND CONSTRUCTION METHODS TO CONFORM TO CITY OF MIDLAND STANDARDS AND SPECIFICATIONS.
11. CONSTRUCT AS SHOWN UNLESS OTHERWISE APPROVED IN WRITING BY THE CITY ENGINEER.

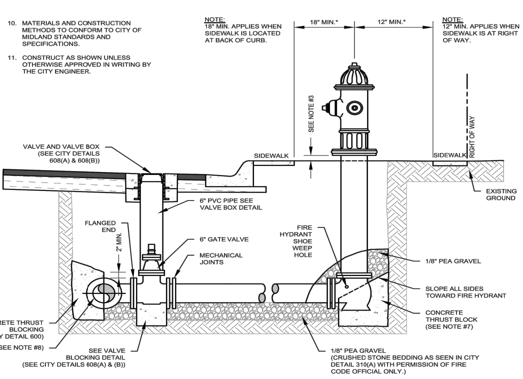

MIDLAND Engineering Services | DRAWN: DPM | CHECKED: JCF | APPROVED: MCC | EFFECTIVE DATE: 10/01/2018 | SCALE: NTS | DETAIL: 603

FIRE HYDRANT NEW WATER MAIN

APPROVED COMPONENT LIST

NO.	VALVES	VALVE COVERS	VALVE BOX
1	MUELLER 2360 M/J	MUELLER 2360 FL X FL	BASS & HAYS STANDARD 390-1 "SHORTY"
2	M & H 4067 M/J	M & H 4067-0	OR APPROVED EQUAL
3	CLOW 2838 M/J	CLOW 2840 FL X FL	
4	OR APPROVED EQUAL	OR APPROVED EQUAL	

VALVE BLOCKING CHART

PIPE SIZE	A	B
4"	5.0"	10.5"
6"	6.5"	1'-.0"
8"	6.5"	1'-.0"
10"	8.0"	1'-1.0"
12"	8.5"	1'-2.0"

NOTES:

1. FOR VALVES ON WATER MAIN PIPES LARGER THAN 12" SEE CITY DETAIL 609.
2. SETTING VALVE BOX TO GRADE MAY REQUIRE ADDING PVC PIPE. IF ADDITIONAL PIPE IS REQUIRED, USE BELL SECTION WITH GASKET AND SET BELL DOWN OVER EXISTING PIPE RISER. A GASKETED SELF CENTERING COLLAR MAY BE USED IN LIEU OF THE BELL SECTION.
3. CONCRETE RING TO BE CITY OF MIDLAND CLASS "C", 3600 PSI, UNLESS OTHERWISE NOTED.
4. USE FIBER REINFORCEMENT FOR ALL CONCRETE , WHETHER PAVEMENT OR THRUST BLOCKING.
5. 12" MINIMUM FOR CONCRETE RING IN AN ARTERIAL ROADWAY.
6. FLOWABLE FILL 2-SACK (2 SACK = 188 LBS/CY, PORTLAND CEMENT.) REQUIRED BENEATH ALL CONCRETE RINGS.
7. FLOWABLE FILL 2-SACK (2 SACK = 188 LBS/CY, PORTLAND CEMENT.) REQUIRED FOR ALL OVER EXCAVATION BACKFILL.
8. MATERIALS AND CONSTRUCTION METHODS TO CONFORM TO CITY OF MIDLAND STANDARDS AND SPECIFICATIONS.
9. CONSTRUCT AS SHOWN UNLESS OTHERWISE APPROVED IN WRITING BY THE CITY ENGINEER.

MIDLAND Engineering Services | DRAWN: DPM | CHECKED: JCF | APPROVED: MCC | EFFECTIVE DATE: 10/01/2018 | SCALE: NTS | DETAIL: 608(B)

TYPICAL VALVE AND VALVE BOX DETAILS

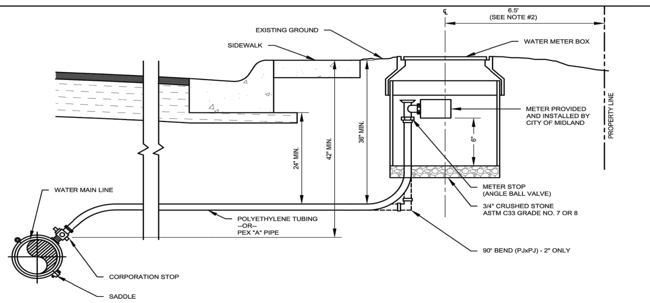

NOTES:

1. ALL WATER SERVICES TO BE 1" OR 2" DIAMETER.
2. THE DISTANCE FROM PROPERTY LINE SHOWN IS FOR 5' SIDEWALK AT THE PROPERTY LINE. WHEN 5' SIDEWALK IS PLACED AT THE BACK OF CURB, PLACE METER BOXES A MINIMUM OF 6.5' FROM THE BACK OF CURB.
3. TWO ADJACENT SERVICE LATERALS MAY BE PLACED IN THE SAME TRENCH. EACH TAP MUST BE SEPARATE AND HAVE BOTH A CORPORATION STOP AND A METER STOP. ("BULLHEAD TAPS ARE NOT PERMITTED".)
4. MATERIALS AND CONSTRUCTION METHODS TO CONFORM TO CITY OF MIDLAND STANDARDS AND SPECIFICATIONS.
5. CONSTRUCT AS SHOWN UNLESS OTHERWISE APPROVED IN WRITING BY THE CITY ENGINEER.

MIDLAND Engineering Services | DRAWN: DPM | CHECKED: JCF | APPROVED: MCC | EFFECTIVE DATE: 10/01/2018 | SCALE: NTS | DETAIL: 604(A)

1" AND 2" WATER METER AND SERVICE CONNECTION

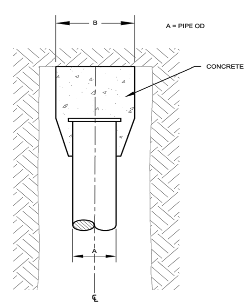

CAP BLOCKING

PIPE OD A	BLOCKING DIMENSIONS B	*C
4"	1'-0"	1'-0"
6"	1'-7"	1'-0"
8"	2'-2"	2'-2"
10"	2'-8"	2'-8"
12"	3'-2"	3'-2"
14"	3'-8"	3'-8"
16"	4'-3"	4'-3"

*C - VERTICAL DEPTH OF CONCRETE BEARING ON UNDISTURBED EARTH

NOTES:

1. CAP ALL WATER MAIN STUB OUTS.
2. FORM ALL CONCRETE THRUST BLOCKING . DO NOT PLACE UN-FORMED THRUST BLOCKING.
3. ALL THRUST BLOCKING TO BE CLASS "A" CONCRETE, 3000 PSI, AND TO BE PLACED AGAINST UNDISTURBED EARTH. USE FIBER REINFORCEMENT THROUGHOUT.
4. FITTINGS TO BE POLY WRAPPED BEFORE BLOCKING IS PLACED.
5. THRUST BLOCKING DESIGN TO BE PROVIDED IN CONSTRUCTION DRAWINGS FOR PIPES LARGER THAN 16" DIAMETER.
6. MATERIALS AND CONSTRUCTION METHODS TO CONFORM TO CITY OF MIDLAND STANDARDS AND SPECIFICATIONS.
7. CONSTRUCT AS SHOWN UNLESS OTHERWISE APPROVED IN WRITING BY THE CITY ENGINEER.

MIDLAND Engineering Services | DRAWN: DPM | CHECKED: JCF | APPROVED: MCC | EFFECTIVE DATE: 10/01/2018 | SCALE: NTS | DETAIL: 617

BLOCKING FOR CAP

APPROVED COMPONENT LIST

1" WATER METER SERVICE	2" WATER METER SERVICE
SADDLE OPTION 1: DUCTILE IRON W/DUAL BAND CC THREAD STEEL STRAP 1. FORD FCD202 SADDLE 2. MUELLER DR 2 S SERIES 3. A.Y. MCDONALD SERIES 4855A 4. OR APPROVED EQUAL	SADDLE OPTION 1: DUCTILE IRON W/DUAL BAND CC THREAD STEEL STRAP 1. FORD FCD202 SADDLE 2. MUELLER DR 2 S SERIES 3. A.Y. MCDONALD SERIES 4855A 4. OR APPROVED EQUAL
SADDLE OPTION 2: BRASS W/DUAL BAND CC THREAD STEEL STRAP 1. FORD 202BSD SADDLE 2. MUELLER BR 2 S SERIES 3. A.Y. MCDONALD SERIES 3855 4. OR APPROVED EQUAL	SADDLE OPTION 2: BRASS W/DUAL BAND CC THREAD STEEL STRAP 1. FORD 202BSD SADDLE 2. MUELLER BR 2 S SERIES 3. A.Y. MCDONALD SERIES 3855 4. OR APPROVED EQUAL
CORPORATION STOP 1. FORD FB1000-4-G-NL 2. MUELLER B-25008N 3. A.Y. MCDONALD SERIES 74701B-22 1 4. OR APPROVED EQUAL	CORPORATION STOP 1. FORD FB1000-7-G-NL 2. MUELLER B-25008N 3. A.Y. MCDONALD SERIES 74701B-22 2 4. OR APPROVED EQUAL
CURB STOP METER VALVE 1. FORD BA43-444W-G-NL 2. MUELLER B-25172N 3. A.Y. MCDONALD SERIES 74602B-22 1 4. OR APPROVED EQUAL	CURB STOP METER VALVE 1. FORD BFA43-777W-G-NL 2. MUELLER B-25172N 3. A.Y. MCDONALD SERIES 74602B-22 2 4. OR APPROVED EQUAL
WATER METER BOX 1. EAST JORDAN 32197099A02 2. OR APPROVED EQUAL	WATER METER BOX 1. EAST JORDAN 32244000A01 2. OR APPROVED EQUAL
SERVICE LINE PIPE 1. ASTM D-2737 POLYETHYLENE TUBING 2. MUNICI PEX 'A' PIPE 3. OR APPROVED EQUAL	SERVICE LINE PIPE 1. ASTM D-2737 POLYETHYLENE TUBING 2. MUNICI PEX 'A' PIPE 3. OR APPROVED EQUAL

NOTES:

1. ALL COMPONENTS OF ANY WATER METER SERVICE LINE MUST COME FROM THE SAME BRAND WHENEVER POSSIBLE.
2. PLASTIC WRAP ALL SADDLES.
3. MATERIALS AND CONSTRUCTION METHODS TO CONFORM TO CITY OF MIDLAND STANDARDS AND SPECIFICATIONS.
4. CONSTRUCT AS SHOWN UNLESS OTHERWISE APPROVED IN WRITING BY THE CITY ENGINEER.

MIDLAND Engineering Services | DRAWN: DPM | CHECKED: JCF | APPROVED: MCC | EFFECTIVE DATE: 10/01/2018 | SCALE: NTS | DETAIL: 604(B)

1" AND 2" WATER METER AND SERVICE CONNECTION

SHEET C310 OF 19

PRELIMINARY REVIEW:

THESE PLANS ARE RELEASED UNDER THE SEAL OF ANDREW L. MELLEN, P.E. #106572 AND MAVERICK ENGINEERING (FIRM # F-15089) ON THIS DAY 05/14/2019, FOR THE PURPOSES OF INTERIM/PRELIMINARY REVIEW. THEY SHALL NOT BE USED FOR THE PURPOSES OF CONSTRUCTION.

WATER DETAILS

FIRE STATION 11

LOT 01, BLOCK 01, LLANO COUNTRY ADDITION,
AN ADDITION TO THE CITY OF MIDLAND,
MIDLAND COUNTY, TEXAS.

DRAWN BY: CLB
CHECKED BY: ALM
APPROVED BY: ALM
DATE: 05/14/2019
JOB: 180218

Δ	REVISIONS	BY	APPR.	DATE

MAVERICK ENGINEERING
1909 West Wall Street, Suite "K"
Midland, Texas 79701 FIRM: F-15089
Tel: (432) 262-0999 Fax: (432) 262-0989
www.Maverick-Eng.com

4.1358

© COPYRIGHT 2018 ALL RIGHTS RESERVED

F:\2018\180218-MARTINEZ ARCHITECTS-FIRE STATION 11 CIVILS\DRAWINGS\CIVIL CONSTRUCTION PLANS\180218 C311 WATER DETAILS.DWG

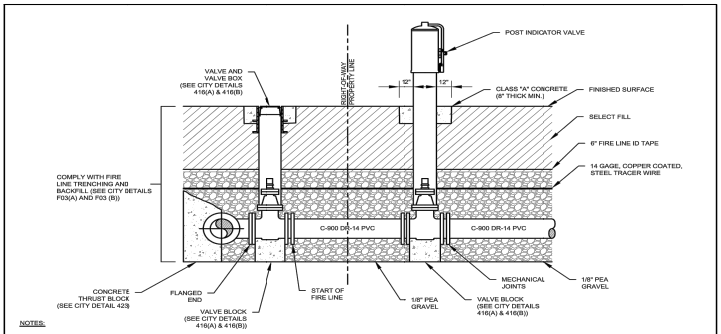

NOTES:

1. ALL VALVE BOXES TO BE SET IN CONCRETE COLLARS AND BE FLUSH WITH THE FINAL SURFACE GRADE.
2. A TEE FITTING IS REQUIRED FOR A CONNECTION TO A NEW WATER MAIN, AND A TAPPING SLEEVE IS REQUIRED FOR A CONNECTION TO AN EXISTING WATER MAIN.
3. MATERIALS AND CONSTRUCTION METHODS TO CONFORM TO CITY OF MIDLAND STANDARDS AND SPECIFICATIONS.
4. CONSTRUCT AS SHOWN UNLESS OTHERWISE APPROVED IN WRITING BY BOTH THE ENGINEERING SERVICES REPRESENTATIVE AND THE FIRE CODE OFFICIAL.

MIDLAND Engineering Services	DRAWN: DPM CHECKED: JCF APPROVED: MCC	EFFECTIVE DATE: __/__/__	SCALE: NTS
FIRE SERVICE LINE			DETAIL: F01

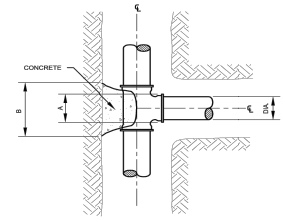

TEE

"T" BLOCKING
DESIGN 180 PSI LINE PRESSURE
SOIL BEARING CAP 2KSF

"T" RUN DIA.	STEM DIA.	BLOCKING DIMENSIONS		
		A	B	*C
TEE				
4"	ALL	1'1"	1'-0"	1'-0"
6"	ALL	1'-2"	1'-7"	1'-0"
8"	ALL	1'-4"	2'-2"	2'-2"
10"	ALL	1'-8"	2'-8"	2'-8"
1'-0"	THRU 6"	1'-10"	1'-10"	1'-8"
1'-0"	OVER 6"	1'-10"	3'-2"	3'-2"
1'-2"	THRU 8"	2'-2"	2'-2"	1'-11"
1'-2"	OVER 8"	2'-2"	3'-8"	3'-8"
1'-4"	THRU 8"	2'-4"	2'-4"	2'-2"
1'-4"	OVER 8"	2'-4"	4'-3"	4'-3"

*C - VERTICAL DEPTH OF CONCRETE BEARING ON UNDISTURBED EARTH

NOTE:

1. FORM ALL CONCRETE THRUST BLOCKING. DO NOT PLACE UN-FORMED THRUST BLOCKING.
2. BLOCKING FOR TEES LARGER THAN 16" RUN TO BE SHOWN ON THE PLANS.
3. ALL THRUST BLOCKING TO BE CLASS "A" CONCRETE, 3000 PSI, AND TO BE PLACED AGAINST UNDISTURBED EARTH. USE FIBER REINFORCEMENT THROUGHOUT.
4. FITTING TO BE POLY WRAPPED BEFORE BLOCKING IS PLACED.
5. MATERIALS AND CONSTRUCTION METHODS TO CONFORM TO CITY OF MIDLAND STANDARDS AND SPECIFICATIONS.
6. CONSTRUCT AS SHOWN UNLESS OTHERWISE APPROVED IN WRITING BY THE CITY ENGINEER.

MIDLAND Engineering Services	DRAWN: DPM CHECKED: JCF APPROVED: MCC	EFFECTIVE DATE: 10/01/2018	SCALE: NTS
BLOCKING FOR TEE			DETAIL: 615

MIDLAND Engineering Services	DRAWN: DPM CHECKED: JCF APPROVED: MCC	EFFECTIVE DATE: 10/01/2018	SCALE: NTS
TRENCHING AND BEDDING			DETAIL: 310(A)

TRENCH BACKFILL NOTES:

1. APPLIES TO ALL PIPE TYPES. (DUCTILE IRON, PVC, ETC.)
2. USE SELECT FILL FOR ALL BACKFILL MATERIAL.
3. NATIVE MATERIAL TO BE EXISTING EXCAVATED SOIL FROM TRENCH WITH ALL MATERIAL BROKEN DOWN ≤ 2".
4. MOISTURE CONDITION ALL BACKFILL MATERIAL PRIOR TO PLACING IN TRENCH.
5. PLACE TRENCH BACKFILL MATERIAL IN MAXIMUM 12" LOOSE LIFTS AND COMPACT TO MAXIMUM 9" COMPACTED LIFTS.
6. REFER TO CITY DETAILS 311 AND 312 FOR TRENCH PAVEMENT REPLACEMENT REQUIREMENTS.
7. PLACE LAYERS B, C, AND E FOUND ON CITY DETAIL 310(B) AS SEPARATE LAYERS.
8. MATERIALS AND CONSTRUCTION METHODS TO CONFORM TO CITY OF MIDLAND STANDARDS AND SPECIFICATIONS.
9. CONSTRUCT AS SHOWN UNLESS OTHERWISE APPROVED IN WRITING BY THE CITY ENGINEER.

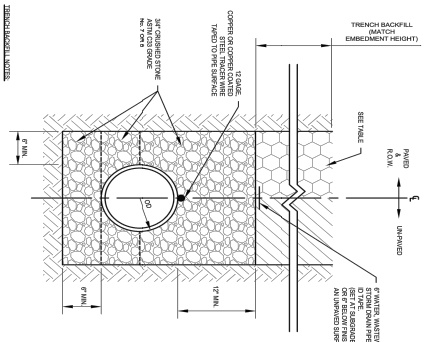

MIDLAND Engineering Services	DRAWN: DPM CHECKED: JCF APPROVED: MCC	EFFECTIVE DATE: 10/01/2018	SCALE: NTS
TRENCHING AND BEDDING			DETAIL: 310(B)

TRENCH ZONES:

ZONE A: TRENCH BACKFILL
ZONE B: PIPE BACKFILL
ZONE C: HAUNCHING
ZONE D: PIPE EMBEDMENT
ZONE E: BEDDING

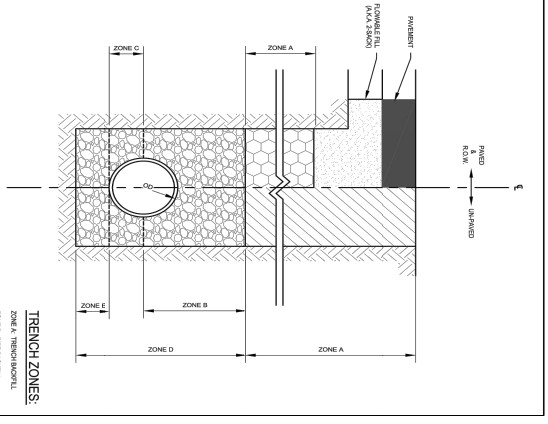

MIDLAND Engineering Services	DRAWN: DPM CHECKED: JCF APPROVED: MCC	EFFECTIVE DATE: 10/01/2018	SCALE: NTS
ASPHALT TRENCH PAVEMENT REPLACEMENT			DETAIL: 311

NOTES:

1. ASPHALT PAVEMENT THICKNESS TO BE A MINIMUM OF 3" OR MATCH THE EXISTING ASPHALT THICKNESS IF IT IS GREATER THAN 3" THICK.
2. PLACE ASPHALT PAVEMENT IN MAXIMUM 2" LIFTS, 95% MODIFIED COMPACTION.
3. PLACE ALL FLOWABLE FILL 2-SACK (2 SACK = 188 LBS/CY, PORTLAND CEMENT) AS A SINGLE CONTINUOUS POUR.
4. EXTEND BOTH ASPHALT AND FLOWABLE FILL 12" BEYOND THE EDGE OF THE TRENCH ON BOTH SIDES.
5. SEE DETAILS 310(A) AND 310(B) REGARDING TRENCH BACKFILL REQUIREMENTS BENEATH THE FLOWABLE FILL.
6. MATERIALS AND CONSTRUCTION METHODS TO CONFORM TO CITY OF MIDLAND STANDARDS AND SPECIFICATIONS.
7. CONSTRUCT AS SHOWN UNLESS OTHERWISE APPROVED IN WRITING BY THE CITY ENGINEER.

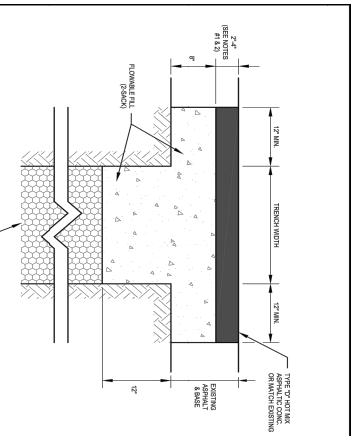

MIDLAND Engineering Services	DRAWN: DPM CHECKED: JCF APPROVED: MCC	EFFECTIVE DATE: __/__/__	SCALE: NTS
FIRE LINE TRENCHING AND BEDDING			DETAIL: F03(A)

NOTES:

1. APPLIES TO ALL PIPE TYPES. (DUCTILE IRON, PVC, ETC.)
2. USE SELECT FILL FOR ALL BACKFILL MATERIAL.
3. MOISTURE CONDITION ALL BACKFILL MATERIAL PRIOR TO PLACING IN TRENCH.
4. PLACE BACKFILL MATERIAL IN MAXIMUM 12" LOOSE LIFTS AND COMPACT TO MAXIMUM 9" COMPACTED LIFTS.
5. REFER TO CITY DETAILS 427 AND 428 FOR TRENCH PAVEMENT REPLACEMENT REQUIREMENTS.
6. MATERIALS AND CONSTRUCTION METHODS TO CONFORM TO CITY OF MIDLAND STANDARDS AND SPECIFICATIONS.
7. CONSTRUCT AS SHOWN UNLESS OTHERWISE APPROVED IN WRITING BY BOTH THE ENGINEERING SERVICES REPRESENTATIVE AND THE FIRE CODE OFFICIAL.

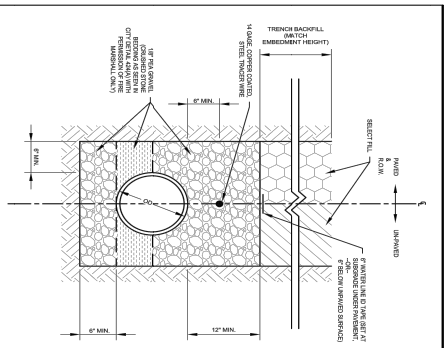

MIDLAND Engineering Services	DRAWN: DPM CHECKED: JCF APPROVED: MCC	EFFECTIVE DATE: __/__/__	SCALE: NTS
FIRE LINE TRENCHING AND BEDDING			DETAIL: F03(B)

TRENCH ZONES:

ZONE A: TRENCH BACKFILL
ZONE B: PIPE BACKFILL
ZONE C: HAUNCHING
ZONE D: PIPE EMBEDMENT
ZONE E: BEDDING

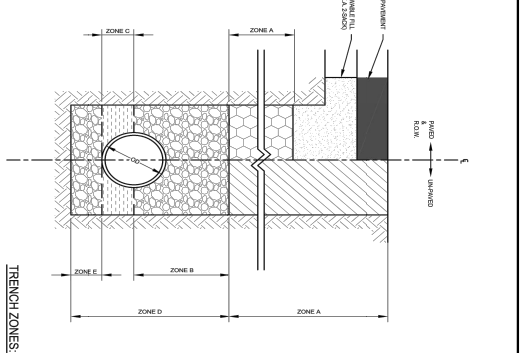

PRELIMINARY REVIEW:

THESE PLANS ARE RELEASED UNDER THE SEAL OF JOSEPH L. MILLER, P.E. #98972 FOR REVIEW PURPOSES ONLY AND NOT FOR CONSTRUCTION, BIDDING OR PERMIT PURPOSES. THEY WERE PREPARED BY ME OR UNDER MY SUPERVISION AND THAT I AM AUTHORIZED UNDER THE LAWS OF THE STATE OF TEXAS TO RELEASE THE DOCUMENTS FOR THE PURPOSES STATED. THIS SHALL NOT BE USED FOR CONSTRUCTION, BIDDING OR PERMIT PURPOSES.

SHEET C311 OF 19

WATER DETAILS

FIRE STATION 11

LOT 01, BLOCK 01, LLANO COUNTRY ADDITION,
AN ADDITION TO THE CITY OF MIDLAND,
MIDLAND COUNTY, TEXAS.

DRAWN BY:	CLB
CHECKED BY:	ALM
APPROVED BY:	ALM
DATE:	05/14/2019
JOB:	180218

Δ	REVISIONS	BY	APPR.	DATE

MAVERICK ENGINEERING
1909 West Wall Street, Suite "K"
Midland, Texas 79701 FIRM: F-15089
Tel: (432) 262-0999 Fax: (432) 262-0989
www.Maverick-Eng.com

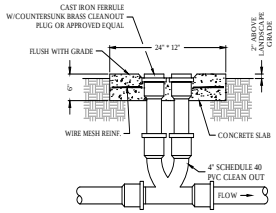

1 TWO WAY CLEAN OUT DETAIL
N.T.S.

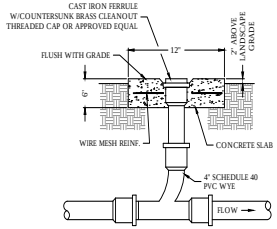

2 ONE WAY CLEAN OUT DETAIL
N.T.S.

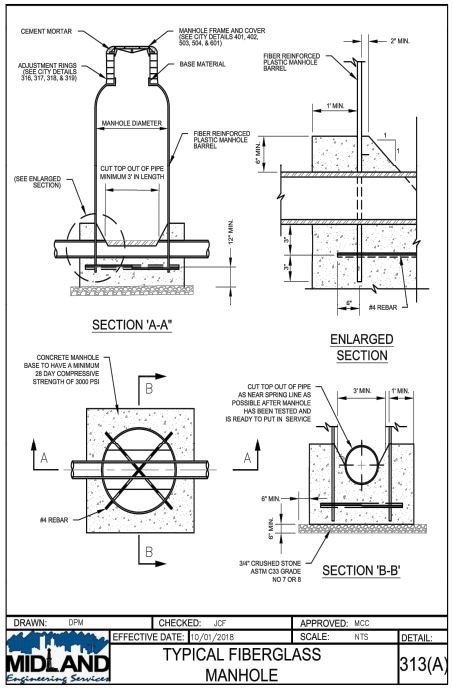

DRAWN: DPM	CHECKED: JCF	APPROVED: MCC	
	EFFECTIVE DATE: 10/01/2018	SCALE: NTS	DETAIL:
MIDLAND Engineering Services	TYPICAL FIBERGLASS MANHOLE		313(A)

NOTES:
1. 48" DIAMETER MANHOLES TO BE USED FOR PIPE DIAMETERS OF 24" OR SMALLER ONLY.
2. INSTALL DROPS AND INTERSECTING PIPES ONLY WHEN CALLED FOR IN CONSTRUCTION DRAWINGS.
3. SET MANHOLE FRAME IN SEALANT PER CITY OF MIDLAND STANDARD SPECIFICATIONS.
4. NEW MANHOLE TO HAVE SEAMLESS AND CONTINUOUS NECK, SHOULDER, AND BARREL.
5. ALL CONCRETE TO BE CLASS "A" CONCRETE.
6. MATERIALS AND CONSTRUCTION METHODS TO CONFORM TO CITY OF MIDLAND STANDARDS AND SPECIFICATIONS.
7. CONSTRUCT AS SHOWN UNLESS OTHERWISE APPROVED IN WRITING BY THE CITY ENGINEER.

DRAWN: DPM	CHECKED: JCF	APPROVED: MCC	
	EFFECTIVE DATE: 10/01/2018	SCALE: NTS	DETAIL:
MIDLAND Engineering Services	TYPICAL FIBERGLASS MANHOLE		313(B)

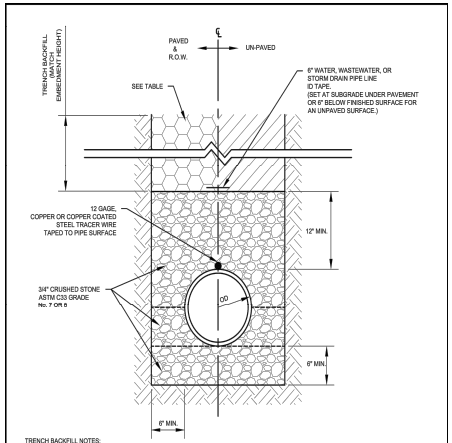

TRENCH BACKFILL NOTES:
1. APPLIES TO ALL PIPE TYPES. (DUCTILE IRON, PVC, ETC.)
2. UTILIZE SELECT FILL BACKFILL BENEATH ALL PAVED SURFACES. NATIVE MATERIAL BACKFILL CAN ONLY BE USER FOR UNPAVED TRENCH CONDITIONS IF BACKFILL MATERIAL IS ≤ 30LL AND ≤ 15 PI.
3. NATIVE MATERIAL TO BE EXISTING EXCAVATED SOIL FROM TRENCH WITH ALL MATERIAL BROKEN DOWN ≤ 2".
4. MOISTURE CONDITION ALL BACKFILL MATERIAL PRIOR TO PLACING IN TRENCH.
5. PLACE TRENCH BACKFILL MATERIAL IN MAXIMUM 12" LOOSE LIFTS AND COMPACT TO MAXIMUM 8" COMPACTED LIFTS.
6. REFER TO CITY DETAILS 311 AND 312 FOR TRENCH PAVEMENT REPLACEMENT REQUIREMENTS.
7. PLACE LAYERS B, C, AND E FOUND ON CITY DETAIL 310(B) AS SEPARATE LAYERS.
8. MATERIALS AND CONSTRUCTION METHODS TO CONFORM TO CITY OF MIDLAND STANDARDS AND SPECIFICATIONS.
9. CONSTRUCT AS SHOWN UNLESS OTHERWISE APPROVED IN WRITING BY THE CITY ENGINEER.

DRAWN: DPM	CHECKED: JCF	APPROVED: MCC	
	EFFECTIVE DATE: 10/01/2018	SCALE: NTS	DETAIL:
MIDLAND Engineering Services	TRENCHING AND BEDDING		310(A)

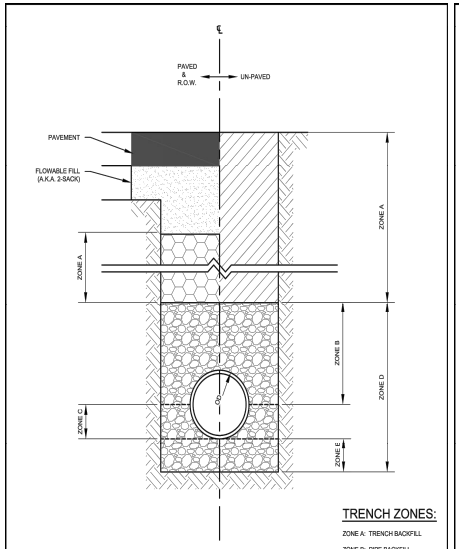

TRENCH ZONES:
ZONE A: TRENCH BACKFILL
ZONE B: PIPE BACKFILL
ZONE C: HAUNCHING
ZONE D: PIPE EMBEDMENT
ZONE E: BEDDING

DRAWN: DPM	CHECKED: JCF	APPROVED: MCC	
	EFFECTIVE DATE: 10/01/2018	SCALE: NTS	DETAIL:
MIDLAND Engineering Services	TRENCHING AND BEDDING		310(B)

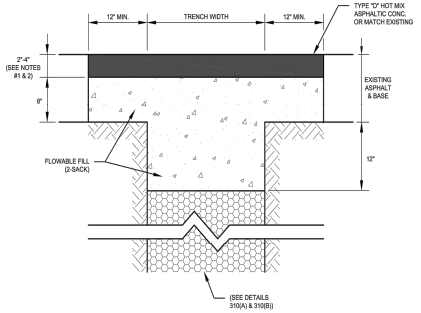

NOTES:
1. ASPHALT PAVEMENT THICKNESS TO BE A MINIMUM OF 2" OR MATCH THE EXISTING ASPHALT THICKNESS IF IT IS GREATER THAN 2" THICK.
2. PLACE ASPHALT PAVEMENT IN MAXIMUM 2" LIFTS, 95% MODIFIED COMPACTION.
3. PLACE ALL FLOWABLE FILL 2-SACK (2 SACK = 188 LBS/CY, PORTLAND CEMENT) AS A SINGLE CONTINUOUS POUR.
4. EXTEND BOTH ASPHALT AND FLOWABLE FILL 12" BEYOND THE EDGE OF THE TRENCH ON BOTH SIDES.
5. SEE DETAILS 310(A) AND 310(B) REGARDING TRENCH BACKFILL REQUIREMENTS BENEATH THE FLOWABLE FILL.
6. MATERIALS AND CONSTRUCTION METHODS TO CONFORM TO CITY OF MIDLAND STANDARDS AND SPECIFICATIONS.
7. CONSTRUCT AS SHOWN UNLESS OTHERWISE APPROVED IN WRITING BY THE CITY ENGINEER.

DRAWN: DPM	CHECKED: JCF	APPROVED: MCC	
	EFFECTIVE DATE: 10/01/2018	SCALE: NTS	DETAIL:
MIDLAND Engineering Services	ASPHALT TRENCH PAVEMENT REPLACEMENT		311

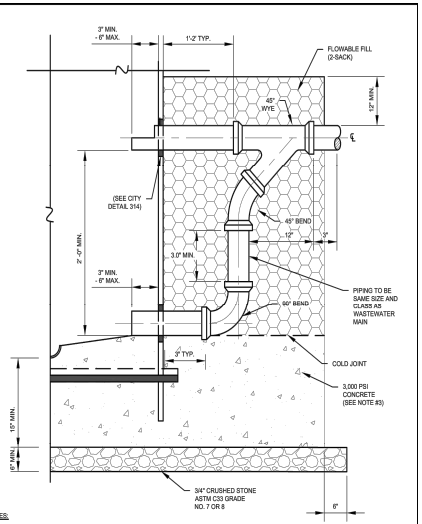

NOTES:
1. FLOWABLE FILL 2-SACK (2 SACK = 188 LBS/CY, PORTLAND CEMENT), REQUIRED FOR ALL OVER EXCAVATION BACKFILL.
2. INSTALL BEND AND WYE AS NEAR TO MANHOLE WALL AS FRACTICAL, USUALLY 3"-4" FROM THE BEND AT THE BOTTOM.
3. ALL CONCRETE TO BE CLASS "A" CONCRETE.
4. MATERIALS AND CONSTRUCTION METHODS TO CONFORM TO CITY OF MIDLAND STANDARDS AND SPECIFICATIONS.
5. CONSTRUCT AS SHOWN UNLESS OTHERWISE APPROVED IN WRITING BY THE CITY ENGINEER.

DRAWN: DPM	CHECKED: JCF	APPROVED: MCC	
	EFFECTIVE DATE: 10/01/2018	SCALE: NTS	DETAIL:
MIDLAND Engineering Services	EXTERNAL DROP STRUCTURE		501

MAVERICK ENGINEERING
1909 West Wall Street, Suite "K"
Midland, Texas 79701 TBPE: F-15089
Tel: (432) 262-0993 Fax: (432) 262-0989
www.Maverick-Engr.com

NO.	BY	DATE
1		

REVISIONS

DRAWN BY: CLB
CHECKED BY: AJM
APPROVED BY: AJM
DATE: 05/14/2019
JOB: 180218

SEWER DETAILS
FIRE STATION 11
LOT 01, BLOCK 01, LLANO COUNTRY ADDITION,
AN ADDITION TO THE CITY OF MIDLAND,
MIDLAND COUNTY, TEXAS.

PRELIMINARY REVIEW:
THESE PLANS ARE RELEASED UNDER THE SEAL OF ANDREW L. MULLIN, P.E. #108172 AND MAVERICK ENGINEERING (FIRM # F-15089) ON THIS DAY 05/14/2019, FOR THE PURPOSES OF INTERIM/PRELIMINARY REVIEW. THEY SHALL NOT BE USED FOR THE PURPOSES OF CONSTRUCTION.

SHEET C320 OF 19

F:\2018\180218-MARTINEZ_ARCHITECTS-FIRE STATION 11\CIVIL\DRAWINGS\CIVIL CONSTRUCTION PLANS\180218 C320 SEWER DETAILS.DWG
© COPYRIGHT 2018 ALL RIGHTS RESERVED

4.1359

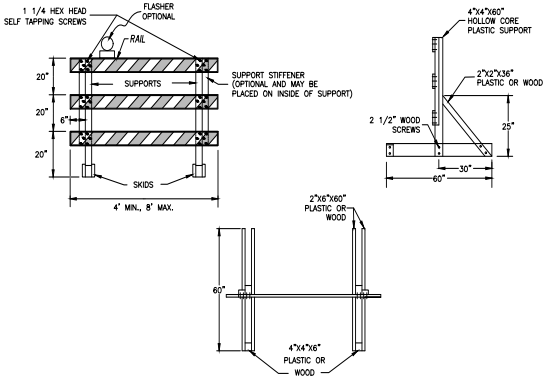

WOOD/PLASTIC TYPE III BARRICADE OPTION

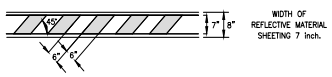

TYPICAL CHEVRON STRIPING DETAIL FOR BARRICADE RAIL

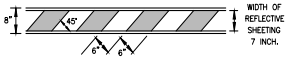

TYPICAL PANEL DETAIL
FOR SKID OR POST TYPE BARRICADES

TYPICAL STRIPING DETAIL FOR BARRICADE RAIL

TYPE I BARRICADE

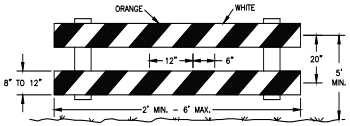

TYPE II BARRICADE

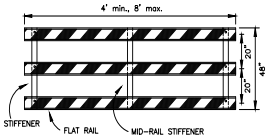

STIFFNER MAY BE INSIDE OR OUTSIDE OF SUPPORT.

* FOR DIMENSIONS OF COMPONENTS REFER TO TXDOT APPROVED PRODUCTS LIST.

TYPE III BARRICADE (TXDOT)

GENERAL NOTES FOR TYPE III BARRICADES

TYPE III BARRICADES ARE TO BE USED AT EACH END OF CONSTRUCTION PROJECT CLOSED TO ALL TRAFFIC.

BARRICADES EXTENDING ACROSS A ROADWAY SHOULD NOT HAVE STRIPES THAT SLOPE DOWNWARD IN THE DIRECTION TOWARD WHICH TRAFFIC MUST TURN IN DETOURING, WHEN BOTH RIGHT AND LEFT TURNS ARE PROVIDED FOR. THE CHEVRON STRIPING MAY SLOPE DOWNWARD IN BOTH DIRECTIONS FROM THE CENTER OF THE BARRICADE STRIPING OR RAILS. FOR THE RIGHT SIDE OF THE ROADWAY, STRIPING SHOULD SLOPE DOWNWARD TO THE LEFT.

FOR THE LEFT SIDE OF THE ROADWAY, STRIPING SHOULD SLOPE TO THE RIGHT.

IDENTIFICATION MARKINGS MAY BE SHOWN ONLY ON BACK SIDE 1". BARRICADES SHALL NOT BE PLACED PARALLEL TO TRAFFIC UNLESS AN ADEQUATE CLEAR ZONE IS PROVIDED. BARRICADES SHALL BE MADE USING PRE-QUALIFIED MATERIALS.

BARRICADES SHALL NOT BE USED AS A SIGN SUPPORT.

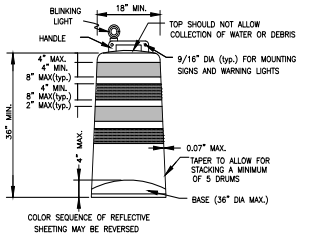

DRUM

CONTRACTOR SHALL PROVIDE, ON REQUEST FROM PROJECT ENGINEER, A LETTER FROM DRUM MANUFACTURER CERTIFYING THE PLASTIC DRUM MODEL NUMBER, THE YEAR AND MONTH OF CONSTRUCTION AND THAT IT MEETS THE SPECIFICATIONS ON THIS STANDARD

WHITE RETROREFLECTIVE TYPE C SHEETING ALTERNATING WITH ORANGE TYPE C RETROREFLECTIVE SHEETING. STRIPE PATTERN MAY BE REVERSED. ALL DRUMS USED IN SUCCESSION SHALL HAVE SAME STRIPE PATTERN.

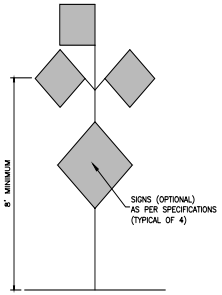

HIGH LEVEL WARNING DEVICE

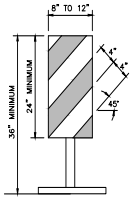

VERTICAL PANEL

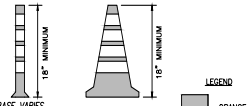

TUBULAR CONES

A - 18" FOR LOWER SPEEDS AND DAY TIME USE (< 40 mph)

B - 28" FOR HIGHER SPEEDS AND NIGHT TIME USE (> 45 mph)

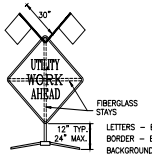

SHORT TERM STATIONARY/SHORT DURATION PORTABLE SIGN SUPPORTS

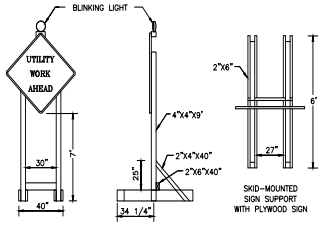

LONG/INTERMEDIATE TERM STATIONARY PORTABLE SIGN SUPPORTS

R4-1
24"x 30"
LETTERS - BLACK
BORDER - BLACK
BACKGROUND - WHITE REFLECTIVE

R4-2
24"x 30"
LETTERS - BLACK
BORDER - BLACK
BACKGROUND - WHITE REFLECTIVE

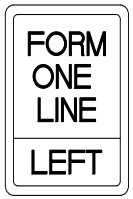

R10-14L
48"x 60"
LETTERS - BLACK
BORDER - BLACK
BACKGROUND - WHITE REFLECTIVE

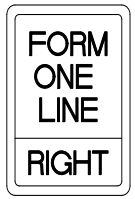

R10-14R
48"x 60"
LETTERS - BLACK
BORDER - BLACK
BACKGROUND - WHITE REFLECTIVE

GENERAL NOTES:

1. TRAFFIC CONES MAY BE USED TO CONTROL TRAFFIC IN PROVIDING TEMPORARY DETOURS THROUGH THE PROJECT.
2. THE LOCATION OF BARRICADES AND THE TYPE OF SIGNS INDICATED ON THE PLANS ARE TO BE ERECTED JUST PRIOR TO BEGINNING OF CONSTRUCTION AND MAINTAINED UNTIL COMPLETION OF THE PROJECT.
3. ALL CONSTRUCTION SIGNS SHALL BE PROMPLTY REMOVED, COVERED, OR TURNED TO FACE AWAY FROM THE ROADWAY WHENEVER NOT IN USE.
4. OTHER SIGNS AND BARRICADES ARE TO BE ERECTED WHEN NECESSITATED BY THE EXECUTION OF THE CONSTRUCTION OF THE PROJECT TO PROVIDE FOR THE ACCESSIBILITY AND SAFETY OF THE PUBLIC.
5. ALL SIGNS THAT ARE TO CONVEY THEIR MESSAGE DURING THE HOURS OF DARKNESS SHALL BE REFLECTORIZED OR ILLUMINATED. SIGNS FOR DAYTIME USE ONLY MAY BE NONREFLECTORIZED BUT A FLOURESCENT BACKGROUND MATERIAL WHERE INCREASED DAYTIME VISIBILITY IS DESIRED.
6. FLASHERS (BATTERY OPERATED) SHALL BE FASTENED TO THE TOP CORNERS OF THE BARRICADES, AND SHALL BE YELLOW IN COLOR AND SHALL BE BRIGHT ENOUGH TO BE CONSPICUOUSLY VISIBLE DURING THE HOURS OF DARKENESS AT ALL DISTANCES UP TO 800' FROM THE UNIT.
7. ALL SIGNS SHALL BE CLEAN AND IN GOOD STATE OF REPAIR AT ALL TIMES ON THIS PROJECT.
8. ALL BARRICADE LAYOUTS MUST BE IN COMPLIANCE WITH THE LATEST EDITION OF THE TEXAS MANUAL ON UNIFORM CONTROL DEVICES FOR STREETS AND HIGHWAYS.

SIGN LEGEND

(1) ROAD CONSTRUCTION 500 FT. AHEAD CW 20-1	(2) FORM ONE LINE (LEFT) (RIGHT) R 20-2L OR R	(3) 18" 20 M.P.H. 18" W 13-1	(4) DETOUR TYPE "C"
(5) 30" 30" W1-4R "L"	(6) BARRICADE 2 @ 12'	(7) BARRICADE 2 @ 12'	(8) 24" 24" R 3-2
(9) STREET CLOSED TO THRU TRAFFIC	(10) ROAD CONSTRUCTION AHEAD	(11) END CONSTRUCTION 24" 60" G 20-2	(12) ROAD CLOSED AHEAD 48" 48" CW 20-30

NOTES:

CITY WILL PAINT 2-4" SOLID YELLOW LINES ON EXISTING PAVEMENT ONLY. WHEN TRAFFIC IS ROUTED TO NEW PAVEMENT, CHANNELIZATION WILL BE ACCOMPLISHED BY CONTRACTOR, FURNISHING AND ERECTING VERTICAL PANELS. PAYMENT WILL BE INCLUDED IN LUMP SUM FOR ALL BARRICADES.

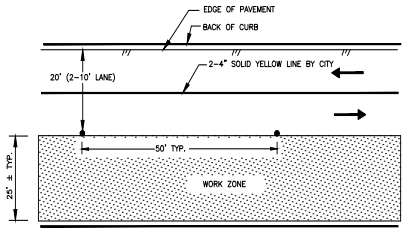

DETAIL "A"

MAVERICK ENGINEERING
1909 West Wall Street, Suite "K"
Midland, Texas 79701 FIRM: F-15089
Tel: (432) 262-0993 Fax: (432) 262-0989
www.Maverick-Engr.com

NO.	BY	APPR.	DATE

REVISIONS

DRAWN BY: CLB
CHECKED BY: ALM
APPROVED BY: ALM
DATE: 05/14/2019
JOB: 180218

BARRICADE DETAILS
FIRE STATION 11
LOT 01, BLOCK 01, LLANO COUNTRY ADDITION, AN ADDITION TO THE CITY OF MIDLAND, MIDLAND COUNTY, TEXAS.

PRELIMINARY REVIEW:

THESE PLANS ARE RELEASED UNDER THE SEAL OF ANDREW L. MELLIN, P.E. #108172 AND MAVERICK ENGINEERING (FIRM # F-15089) ON THIS DAY 05/14/2019, FOR THE PURPOSES OF INTERIM/PRELIMINARY REVIEW. THEY SHALL NOT BE USED FOR THE PURPOSES OF CONSTRUCTION.

SHEET C500 OF 19

4.1360

F:\2018\180218-MARTINEZ ARCHITECTS-FIRE STATION 11 CUP\3-DRAWINGS\CIVIL CONSTRUCTION PLANS 180218 C500 BARRICADE DETAILS.DWG
© COPYRIGHT 2018 ALL RIGHTS RESERVED

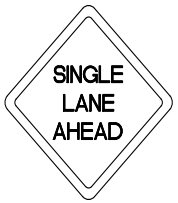

CW20-6D
48" x 48"

LETTERS – BLACK
BORDER – BLACK
BACKGROUND – ORANGE REFLECTIVE

CW20-5DL
48" x 48"

LETTERS – BLACK
BORDER – BLACK
BACKGROUND – ORANGE REFLECTIVE

CW20-7D
48" x 48"

LETTERS – BLACK
BORDER – BLACK
BACKGROUND – ORANGE REFLECTIVE

CW20-5DR
48" x 48"

LETTERS – BLACK
BORDER – BLACK
BACKGROUND – ORANGE REFLECTIVE

CW20-1D OR CW21-4A
48"x 48"

M4-9R
30"x 24"

M4-9S
30"x 24"

M4-8
24"x 12"

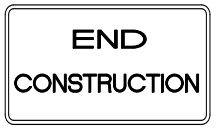

G20-2
60"x 24"

M4-10R
48"x 18"

NOTE:
LETTERS–BLACK
BORDER–BLACK
BACKGROUND–ORANGE REFLECTIVE

R 11-4
60"x 30"

R 11-2
48"x 30"

NOTE:
LETTERS–BLACK
BORDER–BLACK
BACKGROUND–WHITE REFLECTIVE

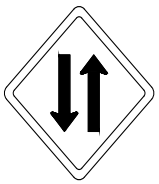

W6-3

SYMBOL, BORDER–BLACK
BACKGROUND–ORANGE REFLECTIVE

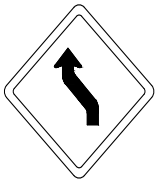

W1-4L

SYMBOL, BORDER–BLACK
BACKGROUND–ORANGE REFLECTIVE

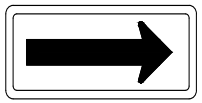

CW1-6

SYMBOL, BORDER–BLACK
BACKGROUND–ORANGE REFLECTIVE

W1-4R

SYMBOL, BORDER–BLACK
BACKGROUND–ORANGE REFLECTIVE

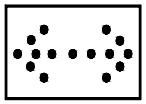

NOTE:
–ARROW PANELS SHALL BE EQUIPPED WITH AUTOMATIC DIMMING DEVICES.
–USE TYPE 'B' 30"X60"

TYPICAL FLASHING ARROW PANEL

R3-1a

R3-2a

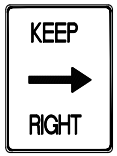

R4-7a

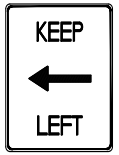

R4-8a

WHITE BACKGROUND WITH BLACK ARROW,
RED CIRCLE AND DIAGONAL

R3-1

R3-2

R3-7L

R3-7R

NOTE:
1– THESE SIGNS FOR USE ON STAND No. CSS-S3 (TYP.)
2– WHITE BACKGROUND, BORDER & LETTERS BLACK FOR SIGNS R3-2a, R3-1a, R4-8a, R4-7a, R3-7L, R3-7R.

NOTES:

1. TRAFFIC CONES MAY BE USED TO CONTROL TRAFFIC IN PROVIDING TEMPORARY DETOURS THROUGH THE PROJECT.
2. THE LOCATION OF BARRICADES AND THE TYPE OF SIGNS INDICATED ON THE PLANS ARE TO BE ERECTED JUST PRIOR TO BEGINNING OF CONSTRUCTION AND MAINTAINED UNTIL COMPLETION OF THE PROJECT.
3. ALL CONSTRUCTION SIGNS SHALL BE PROMPTLY REMOVED, COVERED, OR TURNED TO FACE AWAY FROM THE ROADWAY WHENEVER NOT IN USE.
4. OTHER SIGNS AND BARRICADES ARE TO BE ERECTED WHEN NECESSITATED BY THE EXECUTION OF THE CONSTRUCTION OF THE PROJECT TO PROVIDE FOR THE ACCESSIBILITY AND SAFETY OF THE PUBLIC.
5. ALL SIGNS THAT ARE TO CONVEY THEIR MESSAGE DURING THE HOURS OF DARKNESS SHALL BE REFLECTORIZED OR ILLUMINATED. SIGNS FOR DAYTIME USE ONLY MAY BE NON-REFLECTORIZED BUT A FLUORESCENT BACKGROUND MATERIAL SHOULD BE UTILIZED WHERE INCREASED DAYTIME VISIBILITY IS DESIRED.
6. FLASHERS (BATTERY OPERATED) SHALL BE FASTENED TO THE TOP CORNERS OF THE BARRICADES, AND SHALL BE YELLOW IN COLOR AND SHALL BE BRIGHT ENOUGH TO BE CONSPICUOUSLY VISIBLE DURING THE HOURS OF DARKNESS AT ALL DISTANCES UP TO 800' FROM THE UNIT.
7. ALL SIGNS SHALL BE CLEAN AND IN GOOD STATE OF REPAIR AT ALL TIMES ON THIS PROJECT.
8. FOR ADDITIONAL SIGNS, SEE LATEST EDITION OF THE TEXAS MANUAL ON UNIFORM CONTROL DEVICES FOR STREETS AND HIGHWAYS.
9. CONTRACTOR SHALL SUBMIT TRAFFIC CONTROL PLAN TO THE TxDOT AND CITY OF MIDLAND FOR APPROVAL.

MAVERICK ENGINEERING
1909 West Wall Street, Suite "K"
Midland, Texas 79701 FIRM: F-15089
Tel: (432) 262-9999 Fax: (432) 262-9989
www.Maverick-Engr.com

	BY	APPR.	DATE
Δ			
REVISIONS			

DRAWN BY: CLB
CHECKED BY: ALM
APPROVED BY: ALM
DATE: 05/14/2019
JOB: 180218

SIGN DETAILS
FIRE STATION 11
LOT 01, BLOCK 01, LLANO COUNTRY ADDITION,
AN ADDITION TO THE CITY OF MIDLAND,
MIDLAND COUNTY, TEXAS.

PRELIMINARY
REVIEW:

THESE PLANS ARE RELEASED UNDER THE SEAL OF ANDREW L. MILLER, P.E. #108172 AND MAVERICK ENGINEERING (FIRM # F-15089) ON THIS DAY 05/14/2019, FOR THE PURPOSES OF INTERIM/PRELIMINARY REVIEW. THEY SHALL NOT BE USED FOR THE PURPOSES OF CONSTRUCTION.

SHEET C501 OF 19

F:\2018\180218-MARTINEZ ARCHITECTS-FIRE STATION 11 CWE\3DRAWINGS\CIVIL CONSTRUCTION PLANS 180218 C501 SIGN DETAILS.DWG
© COPYRIGHT 2018 ALL RIGHTS RESERVED

4.1361

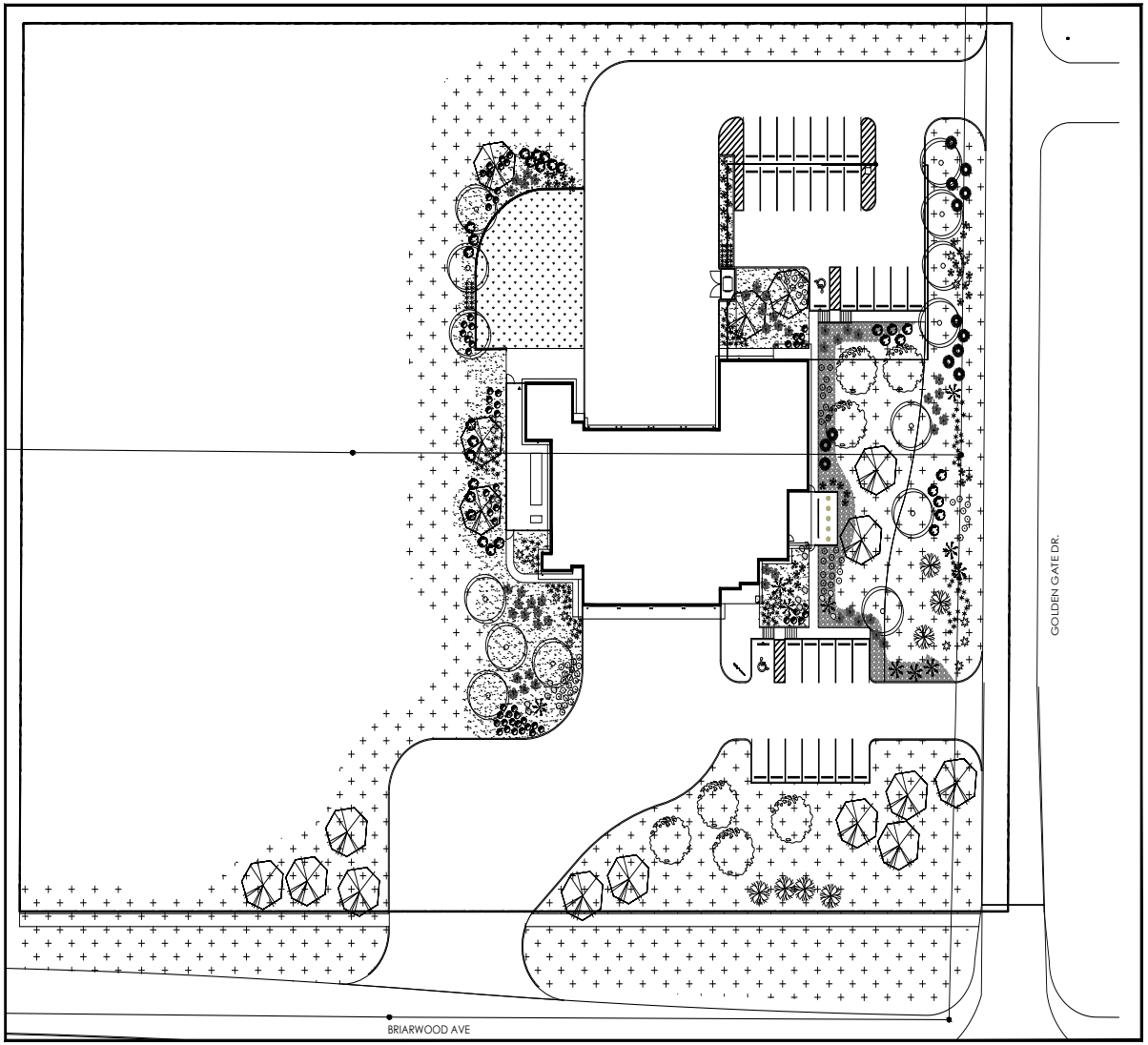

CITY OF MIDLAND LANDSCAPE ORDINANCE REQUIREMENTS

1. 33 TOTAL VEHICLE PARKING SPACES WITHIN THE PROPOSED PROJECT SITE. CITY OF MIDLAND REQUIREMENTS PROVIDE FOR 10 TREES FOR THE FIRST 150 PARKING SPACES, OR A RATIO OF 1 TREE PER 15 SPACES.

2. 941 LINEAR FEET OF FRONTAGE ALONG BRIARWOOD AND GOLDEN GATE. CITY OF MIDLAND REQUIREMENTS PROVIDE FOR 1 TREE PER 30 LINEAR FEET OF STREET FRONTAGE. WITH THE AMOUNT OF LINEAR FEET SHOWN ON THIS PROPERTY, THE CITY WILL REQUIRE A MINIMUM OF 32 TREES.

3. TOTAL REQUIRED TREES FOR THE SITE WILL BE A MINIMUM OF 35. LANDSCAPE PLAN ALLOWS FOR **52**.

4. ALL SHADE TREES WILL HAVE A MINIMUM CALIBER OF 3" WHEN MEASURED 12" ABOVE THE GROUND.

5. ALL ORNAMENTAL TREES, IF ANY, WILL HAVE A MINIMUM CALIBER OF 2" WHEN MEASURED 12" ABOVE THE GROUND.

6. ALL CONIFER TREES SHALL BE A MINIMUM OF 6' TALL WHEN MEASURED ABOVE THE GROUND.

7. THE SITE WILL FEATURE AN AUTOMATED UNDERGROUND IRRIGATION SYSTEM UTILIZING WATER EFFICIENT DRIP IRRIGATION.

8. THE SITE WILL FEATURE STONE GROUND COVER INSTALLED OVER A PERMEABLE GEOTEXTILE WEED BARRIER AND SHALL BE CONSIDERED XERIC IN NATURE.

9. THIS SITE WILL FEATURE WATER EFFICIENT PLANT TREE MATERIAL.

10. WHEN PROPERLY MAINTAINED, THIS SITE WILL NOT ALLOW FOR RUNOFF FROM THE LANDSCAPE ONTO THE ADJACENT ROADWAYS.

11. NO TREE OR SHRUB MATERIAL SHALL BE PLACED IN SUCH A MANNER AS TO CREATE A HAZARD TO VEHICULAR OR PEDESTRIAN TRAFFIC, INCLUDING LINE-OF-SITE TRIANGLES. ANY SHRUB OR TREE LOCATION THAT NEEDS TO BE ADJUSTED DUE TO VISIBILITY, WRITTEN CONSENT MUST BE GRANTED BY LANDSCAPE ARCHITECT PRIOR TO RELOCATING.

12. A MINIMUM OF ALL OF THE ADJACENT RIGHT OF WAY AS WELL AS AN ADDITIONAL TEN PERCENT OF THE LOT AREA SHALL BE UTILIZED FOR LANDSCAPING.

13. LANDSCAPE PLANTS ARE NOT ALLOWED TO BE PLANTED IN RIGHT OF WAY. HOWEVER, BARE SOIL IN RIGHT OF WAY SHALL BE TREATED WITH PERMEABLE WEED-BARRIER FABRIC AND DECOMPOSED GRANITE.

PROJECT DESCRIPTION:

BRIARWOOD & GOLDEN GATE
LOT 130, BLOCK 23, NORTH PART & SW 4, SECTION 23 BLK 40-T1S, MIDLAND TEXAS
LANDSCAPE ARCHITECT:
KDC ASSOCIATES
JONATHON L. PRUESSNER, RLA
432.686.8001

SITE DETAILS:

TOTAL LOT AREA: 217,795 SF
TOTAL AREA OF BUILDING FOOTPRINTS: 13,879 SF
TOTAL LOT AREA - BUILDING FOOTPRINTS: 203,916 SF
TOTAL AREA REQUIRED TO BE LANDSCAPED (LOT AREA - BLDG AREA *10%): 20,392 SF
TOTAL AREA OF LOT THAT WILL BE LANDSCAPED: 35,862 SF (17.6%)
TOTAL LENGTH OF STREET FRONTAGE: 941 LF
TOTAL NUMBER OF TREES REQUIRED PER STREET FRONTAGE: 32
TOTAL NUMBER OF TREES PROVIDED PER STREET FRONTAGE: 32
TOTAL NUMBER OF PARKING SPACES: 33
TOTAL NUMBER OF TREES REQUIRED PER PARKING SPACES: 3
TOTAL NUMBER OF TREES PROVIDED PER PARKING SPACES: 3

LANDSCAPE POINTS

AS PER THE CITY OF MIDLAND LANDSCAPE POINT SYSTEM, THIS SITE ACHIEVES A SCORE OF 51 POINTS, BASED UPON THE FOLLOWING:

- PERMEABLE WEED BARRIER INSTALLED....2 POINTS
- DRIP IRRIGATION SYSTEM IN ALL AREAS 15 FEET OR LESS....10 POINTS
- TREE QUANTITY EXCEEDS REQUIRED QUANTITY (PER TREE)....30 POINTS
- DROUGHT TOLERANT SOD IS PRIMARY VARIETY OF TURF GRASS....5 POINTS
- LANDSCAPE AREA IS CURBED OR SHAPED TO HOLD WATER....2 POINTS
- 50% OF ALL PLANT MATERIAL IS WATER EFFICIENT....2 POINTS

GENERAL NOTES AND CONDITIONS:

1. VERIFY EXISTING SITE INFORMATION, INCLUDING STRUCTURES, UTILITIES, PROPERTY LINES, LIMITS OF ROADWAYS, AND CURB/GUTTERS, THAT MAY EFFECT THE SCOPE OF WORK PRIOR TO BEGINNING SITE CONSTRUCITON.
2. EXISTING UTILITIES ARE INDICATED FOR INFORMATION ONLY AND NOT INTENDED TO SHOW EXACT LOCATION. THE OWNER'S REPRESENTATIVE IS NOT RESPONSIBLE FOR THE LOCATION OF UNDERGROUND UTILITIES OR STRUCTURES WHETHER OR NOT SHOWN OR DETAILED AND INSTALLED BY ANY OTHER CONTRACT. THE CONTRACTOR SHALL LOCATE ALL UTILITIES AND MAINTAIN THE LOCATION DURING ALL PHASES OF THE WORK. THE CONTRACTOR SHALL BE RESPONSIBLE FOR ANY DAMAGE TO UTILITIES OR STRUCTURES AND ANY INJURIES THEREFROM. RESTORATION OF ANY UTILITIES DAMAGED BY THE CONTRACTOR SHALL BE AT THE CONTRACTORS EXPENSE TO THE SATISFACTION OF THE OWNER.
3. THE CONTRACTOR SHALL TAKE ALL NECESSARY STEPS AS REQUIRED TO PROPERLY PROTECT AND MAINTAIN HIS WORK FOR THE DURATION OF THIS CONTRACT. EQUIPMENT SHALL BE REMOVED OR SECURELY AFFIXED TO SITE AT END OF WORK DAY. DAMAGE OR THEFT OF EQUIPMENT IS SOLELY THE RESPONSIBILITY OF THE CONTRACTOR, AND ANY INJURY OR OTHER LIABILITY ARISING FROM EQUIPMENT OR MATERIALS LEFT OR STORED ON SITE SHALL SOLELY BE THE RESPONSIBILITY OF THE CONTRACTOR.
4. PROVIDE WRITTEN NOTIFICATION OF ALL DISCREPANCIES BETWEEN EXISTING AND PROPOSED SITE IMPROVEMENTS.
5. ALL WORK SHALL COMPLY WITH ALL APPLICABLE CODES AND ORDINANCES OF THE CITY IN WHICH THE PROJECT IS LOCATED, AND THE STATE OF TEXAS.
6. ANYTHING MENTIONED IN THE TECHNICAL SPECIFICATIONS AND NOT SHOWN ON THE DRAWINGS, OR SHOWN ON THE DRAWINGS AND NOT MENTIONED IN THE TECHNICAL SPECIFICATIONS SHALL BE OF LIKE EFFECT AS IF SHOWN OR MENTIONED IN BOTH. IN CASE OF A DISCREPANCY BETWEEN THE DRAWINGS AND TECHNICAL SPECIFICATIONS, THE MATTER SHALL BE IMMEDIATELY SUBMITTED TO THE OWNERS REPRESENTATIVE. WITHOUT HIS DECISIONS, SAID DISCREPENCY SHALL NOT BE ADJUSTED BY THE CONTRACTOR, SAVE ONLY AT HIS OWN RISK AND EXPENSE.
7. CONTRACTOR SHALL STAKE OUT PLAN TO ITS FULL EXTENT AND SHALL OBTAIN THE APPROVAL OF THE LANDSCAPE ARCHITECT AND OWNER, MAKING MODIFICATIONS AS REQUIRED PRIOR TO PROCEEDING WITH THE WORK.
8. NOTES AND DETAILS ON SPECIFIED DRAWINGS TAKE PRECEDENCE OVER GENERAL NOTES AND TYPICAL DETAILS.
9. ALL FINISHED GRADES SHALL PROVIDE FOR NATURAL RUNOFF OF WATER WITHOUT LOW SPOTS OR POCKETS. UNLESS SPECIFICALLY DRAWN AND DETAILED, ALL FLOW SHALL BE AWAY FROM ALL STRUCTURES OR PLAYING FIELDS ON SITE, AND SHALL NOT CROSS SIDEWALKS OR OTHER PEDESTRIAN FLOW AREAS.
10. HOLD FINISHED GRADES FOR PLANTING LAWN AREAS 1.5" BELOW TOP OF ADJACENT PAVEMENT. ALL FINISHED GRADES FOR PLANTING BEDS SHALL BE HELD AT 3" BELOW TOP OF ADJACENT PAVEMENT.
11. GRADUALLY ROUND OFF TOPS AND TOES OF ALL PLANTED SLOPES TO PRODUCE A SMOOTH ARCHITECTURAL TRANSITION BETWEEN RELATIVELY LEVEL AREAS AND SLOPES, UNLESS SPECIFICALLY DETAILED IN THE LANDSCAPE GRADING DETAILS.
12. GRADES SHOWN ARE FINISHED GRADES. SUBGRADES NEEDED TO ATTAIN FILL OR TOPSOIL PLACEMENT ARE NOT REFLECTED.
13. IF USED IN THE PLAN, ALL RETAINING WALL TOPS ARE LEVEL UNLESS OTHERWISE INDICATED.
14. PLANS DO NOT INDICATE ALL SLEEVE LOCATIONS! SLEEVES AND CONDUITS SHALL BE INSTALLED 18" BELOW ANY PAVEMENT, AND UNDER ALL SIDEWALKS OR PAVEMENT AREAS WHICH ARE WIDER THAN 48 INCHES. INSTALLING SUCH SHALL BE THE RESPONSIBILITY OF THE GENERAL CONTRACTOR WHO SHALL COORDINATE HIS WORK WITH ALL TRADES WHO MAY NEED SLEEVE ACCESS. UNLESS OTHERWISE INDICATED, ALL SLEEVES SHALL BE 4" SCHEDULE 40 PVC, AND SHALL EXTEND A MINIMUM OF 12" BEYOND THE PAVEMENT. WHERE MAINLINES ARE 3" OR LARGER, SLEEVES SHALL BE 6" SCHEDULE 40 PVC. ENDS SHALL BE CLEARLY MARKED WITH FLAGGING TAPE, PIPE, SURVEY FLAGS, OR OTHER SEMI-PERMANENT MARK.
15. ALL EXISTING TREES AND VEGETATION SHOULD BE CONSIDERED AS REMAINING UNLESS OTHERWISE SPECIFICALLY SHOWN. DO NOT REMOVE ANY TREES WITHOUT SPECIFIC PERMISSION FROM THE LANDSCAPE ARCHITECT. ALL TREES SHALL BE PROTECTED BY A MINIMUM 3' TALL VINYL SNOW FENCE OR SIMILAR BARRIER. FENCING SHALL BE PLACED UNDER THE OUTERMOST EDGE OF THE CANOPY OF THE TREE. NO VEHICULAR TRAFFIC SHALL BE ALLOWED UNDER ANY TREE CANOPY FOR ANY REASON. NO SOLVENTS, THINNERS, PAINT, CONCRETE WASH, OR OTHER MATERIALS SHALL BE DISBURSED UNDER THE CANOPY OF ANY TREE.
16. UNLESS SPECIFICALLY INDICATED, THE CONTRACTOR SHALL BE RESPONSIBLE FOR THE PROTECTION, MAINTENANCE, AND RESTORATION OF ANY ELECTRICAL, IRRIGATION AND DRAINAGE SYSTEMS ON SITE.
17. CONTRACTOR SHALL TAKE ALL NECESSARY STEPS TO NOTIFY ALL UTILITY COMPANIES PRIOR TO ANY DIGGING, TRENCHING, OR EXCAVATION ON SITE. CONSTRUCTION MAY NOT BEGIN PRIOR TO PROPER AND ACCURATE MARKING OF UNDERGROUND UTILITIES AND SECURING OF ANY AND ALL APPLICABLE PERMITS.
18. THE ELEMENTS WITHIN THIS PROJECT FALL WITHIN THE AMERICANS WITH DISABILITIES ACT, AND AS SUCH, ALL SIDEWALKS, GRADES, AND BUILDING ELEMENTS MUST COMPLY.
19. HOLES, TRENCHES, PITS, OR OTHER ELEMENTS WHICH COULD CAUSE FALLS OR OTHER ACCIDENTS SHALL BE FULLY PROTECTED AND MARKED BY THE CONTRACTOR, WHO ASSUMES FULL LIABILITY FOR ANY INJURIES OR DAMAGES CAUSED BY CONSTRUCTION.
20. SPEED AND COORDINATION OF CONSTRUCTION ELEMENTS AND WORK TRADES IS ESSENTIAL FOR THIS PROJECTAND CONTRACTOR SHALL USE ALL NECESSARY METHODS TO IMPLEMENT BOTH.

01 Landscape Plan

SCALE: 1" = 30'-0"

0 15 30 60

PROFESSIONAL SEAL

LOGO / CONTACT

KDCA ssociates
25 Years
-Established 1994-
Environmental Design + Planning Solutions
www.kdcassociates.com 4400 N. Big Spring, Ste 205, Midland, Texas 79705 432.686.8001

DESIGN TEAM

Architectural
Martinez Architects

Civil Engineer
Maverick Engineering

Structural
Matrix Structural Engineers

M/E/P/T
DBR

Landscape Architect
KDC Associates

FIRE STATION #11
CITY OF MIDLAND
BRIARWOOD AVE. & GOLDEN GATE DR.
MIDLAND TEXAS 79701

ISSUE

100% DESIGN DEVELOPMENT
22-MAY-2019

75% CONSTRUCTION DOCUMENT
26-JUN-2019

100% ISSUE FOR PERMIT
30-JUL-2019

100% ISSUE FOR APPROVAL TO BID
16-JAN-2020

4.1362

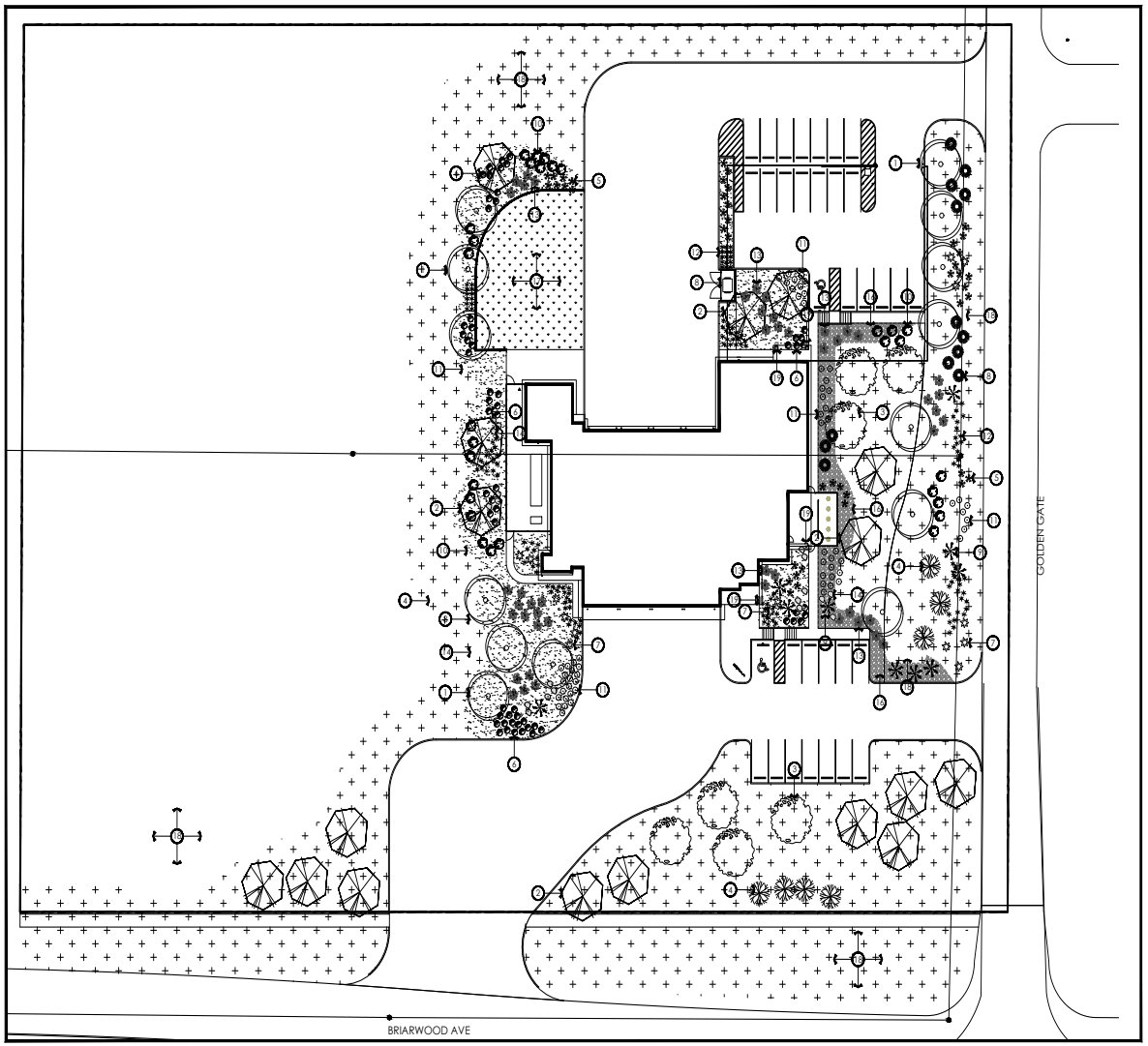

PLANTING MATERIALS :

1. PISTACIA CHINENSIS - CHINESE PISTACHE; (14); 4" CALIPER; SINGLE TRUNK WITH SIMILAR CANOPY SIZE, HEIGHT, AND SHAPE. 100 GALLON CONTAINER GROWN ONLY. PLACE AS SHOWN WITH A MIN. 10'-0" FROM EDGE OF PAVEMENT. PRUNE TO DISCRETION OF LANDSCAPE ARCHITECT ON SITE. — TYPICAL PLAN SYMBOL:
2. ULMUS CRASSIFOLIA - CEDAR ELM; (17); 4" CALIPER; SINGLE TRUNK WITH SIMILAR CANOPY SIZE; HEIGHT AND SHAPE. 100 GALLON CONTAINER GROWN ONLY. PLACE IN FIELD WHERE STAKED BY LANDSCAPE ARCHITECT. — TYPICAL PLAN SYMBOL:
3. QUERCUS RUBRA; RED OAK; (6); 4" CALIPER; MULTI-TRUNK WITH SIMILAR CANOPY SIZE, HEIGHT AND SHAPE. 100 GALLON CONTAINER GROWN. PLACE AS SHOWN. PRUNE TO DISCRETION OF LANDSCAPE ARCHITECT. — TYPICAL PLAN SYMBOL:
4. VITEX AGNUS CASTUS - VITEX; (7); 3" CALIPER; MULTI-TRUNK WITH SIMILAR CANOPY SIZE, HEIGHT, AND SHAPE. 95 GALLON CONTAINER GROWN ONLY. PLACE AS SHOWN WITH A MIN. 10'-0" FROM EDGE OF PAVEMENT. PRUNE TO DISCRETION OF LANDSCAPE ARCHITECT ON SITE. — TYPICAL PLAN SYMBOL:
5. HESPERALOE PARVIFLORA- RED YUCCA; (43); 5 GALLON CONTAINER GROWN; 12" TALL X 12" WIDE . — TYPICAL PLAN SYMBOL:
6. EUPHORBIA RIGIDA - GOPHER PLANT (60); 5 GALLON CONTAINER GROWN; 12" TALL X 12" WIDE . — TYPICAL PLAN SYMBOL:
7. YUCCA ROSTRATA - BEAKED YUCCA; (15); 4' MIN. HEIGHT, 4" MIN TRUNK; CONTAINER GROWN ONLY. — TYPICAL PLAN SYMBOL:
8. DASYLIRION WHEELERI 'TEXANA' - SOTOL; (13); 5 GALLON, CONTAINER GROWN ONLY MIN. 20" TALL X 18" WIDE; VERY FULL — TYPICAL PLAN SYMBOL:
9. FOUQUERIA SPLENDENS - OCOTILLO; (10); MIN 6' TALL, 5 CANE MIN. CONTAINER NURSERY GROWN STOCK ONLY. — TYPICAL PLAN SYMBOL:
10. LEUCOPHYLLUM FRUTESCENS 'SILVERADO' - SILVERADO SAGE; (29); 5 GALLON CONTAINER GROWN; 15" TALL X 12" WIDE . — TYPICAL PLAN SYMBOL:
11. STIPA TENNUISSIMA - MEXICAN FEATHER GRASS; (62) 1 GALLON CONTAINER GROWN; MIN. 12" WIDE X 18" TALL; VERY FULL. — TYPICAL PLAN SYMBOL:
12. BOUTELOUA GRACILIMUS 'BLONDE AMBITION' - BLONDE AMBITION GRAMMA GRASS; (137) 1 GALLON; CONTAINER GROWN; 12" WIDE X 12" TALL — TYPICAL PLAN SYMBOL:
13. CAESALPINIA PULCHERRIMA - RED BIRD OF PARADISE; (45) 15 GALLON CONTAINER GROWN. MIN. 24" TALL X 24" WIDE; VERY FULL — TYPICAL PLAN SYMBOL:
14. LIMESTONE/CALICHE BOULDER; (19); MIN. 2' X 18" X 4'. BURY 1/3 BODY DEPTH. INDIGENOUS STONE FROM SITE WILL BE ACCEPTABLE, OTHERWISE PROVIDE PHOTOGRAPHS FOR APPROVAL. — TYPICAL PLAN SYMBOL:
15. 1/2" SCREENED DECOMPOSED GRANITE AREA; (15,879 SQ.FT. VERIFY) INSTALL OVER PERMEABLE GEOTEXTILE MIN. 3" DEEP. PROVIDE SUBMITTALS AND REFER TO SPECIFICATIONS. ALL BED AREAS UNLESS OTHERWISE NOTED. — TYPICAL PLAN SYMBOL:
16. 2" SCREENED DECOMPOSED GRANITE AREA; (2,375 SQ.FT. VERIFY) INSTALL OVER PERMEABLE GEOTEXTILE MIN. 3" DEEP. PROVIDE SUBMITTALS AND REFER TO SPECIFICATIONS. ALL BED AREAS UNLESS OTHERWISE NOTED. — TYPICAL PLAN SYMBOL:
17. BERMUDA SOD TURF; (3,722 SQ.FT. VERIFY) PROVIDE SUBMITTALS AND REFER TO SPECIFICATIONS. — TYPICAL PLAN SYMBOL:
18. HYDROSEEDED AREA; (72,072 SQ. FT. VERIFY) SEE HYDROSEED PLAN FOR MIXES; PROVIDE SUBMITTALS AND REFER TO SPECIFICATIONS. — TYPICAL PLAN SYMBOL:
19. 3-6" RIVER ROCK AT BASE OF DOWNSPOUTS (INSTALL AREA THAT IS MIN. 24" X 24" WITH GEOTEXTILE FABRIC UNDER ROCK). FABRIC SHALL NOT BE VISIBLE. INSTALL AT BASE OF ALL DOWNSPOUTS IN PLANTING AREAS.
20. 6" WIDE CONCRETE BED BORDER (125 LINEAR FT. VERIFY)

GENERAL PLANTING NOTES:

A. SEE L-2.0 FOR IRRIGATION PLANS. NO SUBSTITUTIONS OR DEVIATIONS FROM THESE PLANS SHALL BE ALLOWED OR ACCEPTED WITHOUT WRITTEN CONSENT FROM THE LANDSCAPE ARCHITECT.

B. ALL PLANTING HOLES FOR SHRUBS SHALL BE DUG TO A MINIMUM DIMENSION OF 36" WIDE X 18" DEEP. MECHANICAL EXCAVATION OF THESE HOLES MAY BE NECESSARY.

C. ALL PLANTING HOLES FOR TREES SHALL BE DUG TO A MINIMUM DIMENSION OF 60" WIDE X 36" DEEP. MECHANICAL EXCAVATION OF THESE HOLES MAY BE NECESSARY.

D. TREE PLACEMENT WILL BE STAKED PRIOR TO INSTALLATION. NO TREES MAY BE PLANTED DIRECTLY ABOVE THE CITY WATER OR SEWER LINES. ADJUSTMENT SHALL BE MADE IN THE FIELD AS NECESSARY TO AVOID PLACEMENT ISSUES.

E. PLANTING SOIL SHALL ONLY BE REQUIRED FOR THE PLANTING WELL OF EACH TREE OR SHRUB.

CRITICAL NOTES:

1. PRIOR TO INSTALLATION, LANDSCAPE CONTRACTOR SHALL HAVE ALL PLANT AND TREE MATERIAL REVIEWED IN A LOCAL NURSERY/HOLDING AREA. LANDSCAPE ARCHITECT HAS THE RIGHT TO REJECT ANY/ALL PLANT, TREE, STONE, OR OTHER CONSTRUCTION MATERIALS IF HE FEELS THAT THEY DO NOT MEET THE INTENDED QUALITY OF THE PROJECT. IN SUCH CASE, ALL ASSOCIATED COST WITH ACQUIRING, SHIPPING, AND INSTALLING NEW MATERIAL SHALL SOLELY BE AT THE COST OF THE LANDSCAPE CONTRACTOR. THIS PRACTICE MAY BE REPEATED AS MANY TIMES AS NECESSARY IN ORDER TO ACHIEVE THE DESIRED QUALITY. THEREFORE, IT IS CRITICAL THAT THE LANDSCAPE CONTRACTOR PURCHASE AND PROVIDE HIGH-QUALITY MATERIAL UPON SUCCESSFUL BIDDING AND AWARD OF THE PROJECT.

2. PRIOR TO ANY DIGGING, CONTRACTOR SHALL CONTACT AND COORDINATE WITH 1-800-DIG-TESS, www.DIGTESS.COM, IN ORDER TO VERIFY EXISTENCE AND DETERMINE EXACT LOCATION OF ANY AND ALL KNOWN UNDERGROUND UTILITIES. CONTRACTOR SHALL NOT DIG PRIOR TO DIGTESS SITE RESULTS AND MARKINGS. ALL UNDERGROUND UTILITIES SHOWN IN THESE LANDSCAPE AND IRRIGATION PLAN SETS ARE TO BE CONSIDERED DIAGRAMMATIC AND GENERAL IN LOCATION PRIOR TO EXACT DETERMINATION BY DIGTESS AND OTHERS.

3. ALL QUANTITIES SHOWN ON THESE SEALED PLANS SHOULD BE FIELD VERIFIED BY THE CONTRACTOR PRIOR TO BIDDING. WHERE DISCREPANCIES ARISE, CONTRACTOR TO CONTACT THE LANDSCAPE ARCHITECT IMMEDIATELY FOR FURTHER DETERMINATION ON QUANTITIES TO BE PLACED IN THE FIELD.

4. ALL ELEMENTS OF THE LANDSCAPE PLANS SHALL MEET OR EXCEED TEXAS ACCESSIBILITY STANDARDS AS WELL AS STANDARDS SET FORTH BY THE AMERICANS WITH DISABILITIES ACT. THE CONTRACTOR SHALL FIELD VERIFY THAT ALL SLOPES, DISTANCES, OR OTHER MEASUREMENTS AND STANDARDS MEET STATE AND FEDERAL ACCESSIBILITY REQUIREMENTS. WHEN IT IS DETERMINED IN THE FIELD THAT CONDITIONS HAVE INFLUENCED THE CAPACITY OF THE DESIGN TO MEET THESE STANDARDS, THE CONTRACTOR SHALL IMMEDIATELY CONTACT THE LANDSCAPE ARCHITECT SO THAT A VIABLE SOLUTION CAN BE AGREED UPON. FAILURE TO DO SO MAY RESULT IN THE PROJECT NOT BEING ACCEPTED.

LANDSCAPE-BASE BID

01 Landscape Plan
SCALE: 1" = 30'-0"

0 15 30 60

4.1363

PROFESSIONAL SEAL

LOGO / CONTACT

KDCA associates
25 Years
-Established 1994-
Environmental Design + Planning Solutions
www.kdcassociates.com 4400 N. Big Spring, Ste. 203, Midland, Texas 79705 432.686.8020

DESIGN TEAM

Architectural
Martinez Architects

Civil Engineer
Maverick Engineering

Structural
Matrix Structural Engineers

M/E/P/T
DBR

Landscape Architect
KDC Associates

FIRE STATION #11
CITY OF MIDLAND
BRIARWOOD AVE. & GOLDEN GATE DR.
MIDLAND TEXAS 79701

ISSUE
100% DESIGN DEVELOPMENT 22-MAY-2019
75% CONSTRUCTION DOCUMENT 26-JUN-2019
100% ISSUE FOR PERMIT 30-JUL-2019
100% ISSUE FOR APPROVAL TO BID 16-JAN-2020

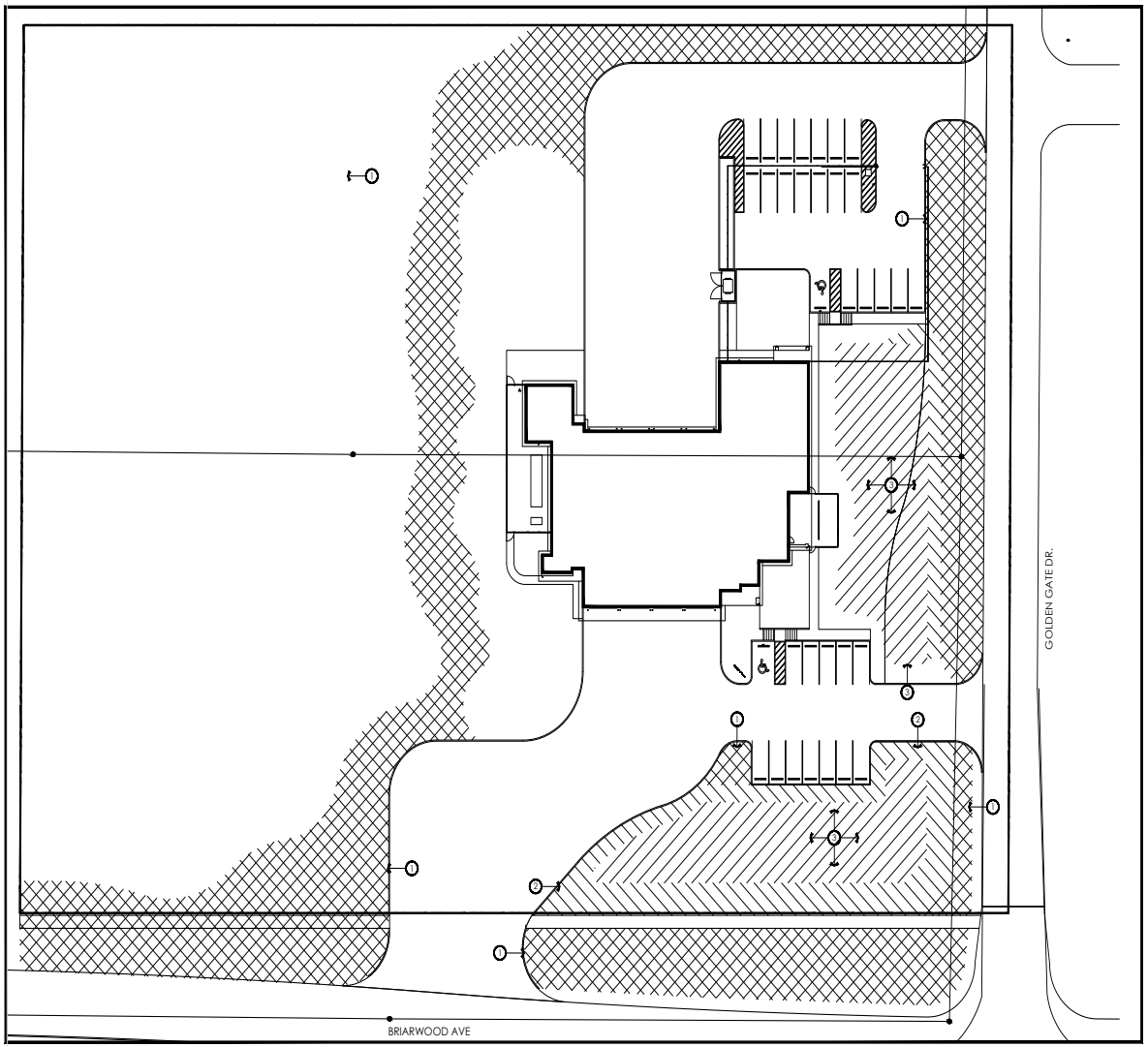

SEED MIXES:

1. 52,450 SF 50-50 MIX OF HYDROSEEDED CALICHE MIX & NATIVE TEXAS MIX; APPLY AT 15 LBS PER ACRE; TOTAL NEEDED: 18 LBS. 9 LBS OF EACH MIX.

2. 7,050 SF HYDROSEEDED DAM SLOPE MIX; APPLY AT 20 LBS PER ACRE; TOTAL NEEDED: 4 LBS

3. 12,600 SF HYDROSEEDED RIPARIAN RECOVERY MIX; APPLY AT 10 LBS PER ACRE; TOTAL NEEDED: 3 LBS

ALL SEED TO BE SUPPLIED BY:
NATIVE AMERICAN SEED
JUNCTION, TX
1.800.728.4043

ALL SEED TO BE MIN. 80% PURE LIVE SEED.

CONTRACTOR TO APPLY SEED PER SPECIFICATIONS AND METHODS DICTATED BY NATIVE AMERICAN SEED.

SEED NOTES:

1. ALL AREAS RECEIVING HYDROSEED SHALL BE BROKEN UP AND TILLED BY THE CONTRACTOR TO A MINIMUM DEPTH OF 4" TO LOOSEN UP COMPACTED SOILS.
2. ALL AREAS RECEIVING HYDROSEEDED SHALL BE TOP DRESSED WITH GOOD TOP SOIL SUITABLE FOR PLANTING. ALL DEBRIS AND ROCKS LARGER THAN 1/4" SHALL BE RAKED OUT AND REMOVED FROM SOIL.
3. FOR A MINIMUM OF ONE WEEK PRIOR TO HYDROSEEDING, THE CONTRACTOR SHALL USE WATER TO MOISTEN THE SOILS WHERE HYDROSEEDING WILL OCCUR.
4. PRIOR TO HYDROSEEDING, THE CONTRACTOR SHALL MOW AND REMOVE ANY VEGETATION IN THE AREAS TO RECEIVE HYDROSEEDING SO THAT SEED WILL CONTACT AND BE INSTALLED ON THE LOOSENED SOIL.
5. WITHIN TWO CALENDAR DAYS OF HYDROSEED BEING INSTALLED, CONTRACTOR SHALL FERTILIZE ALL SEEDED AREAS WITH A NEW LAWN STARTER FERTILIZER AT THE APPLICATION RATE SPECIFIED BY MANUFACTURER.

01 Hydroseed Plan
SCALE: 1" = 30'-0"

0 15 30 60

PROFESSIONAL SEAL

LOGO / CONTACT

KDCA ssociates
25 Years
-Established 1994-
Environmental Design + Planning Solutions
www.kdcassociates.com 4401 N. Big Spring, Ste. 203, Midland, Texas 79705 432.684.8020

DESIGN TEAM

Architectural
Martinez Architects

Civil Engineer
Maverick Engineering

Structural
Matrix Structural Engineers

M/E/P/T
DBR

Landscape Architect
KDC Associates

FIRE STATION #11
CITY OF MIDLAND
BRIARWOOD AVE. & GOLDEN GATE DR.
MIDLAND TEXAS 79701

ISSUE

100% DESIGN DEVELOPMENT
22-MAY-2019

75% CONSTRUCTION DOCUMENT
26-JUN-2019

100% ISSUE FOR PERMIT
30-JUL-2019

100% ISSUE FOR APPROVAL TO BID
16-JAN-2020

4.1364

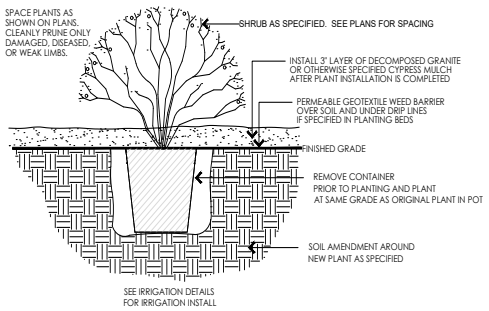

a Shrub Installation
Scale: NTS

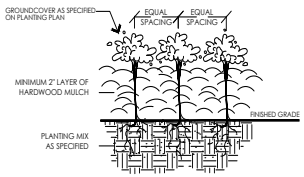

b Groundcover Installation
Scale: NTS

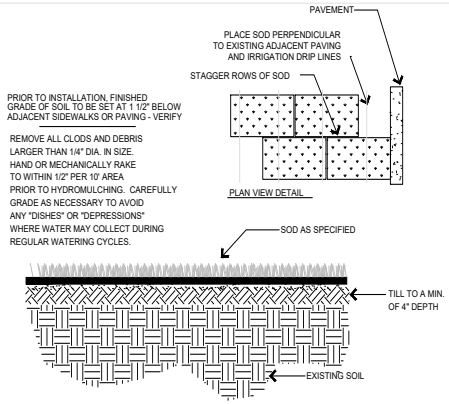

c Sod Installation
Scale: NTS

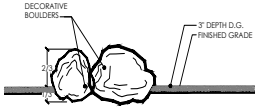

d Boulder Installation
Scale: NTS

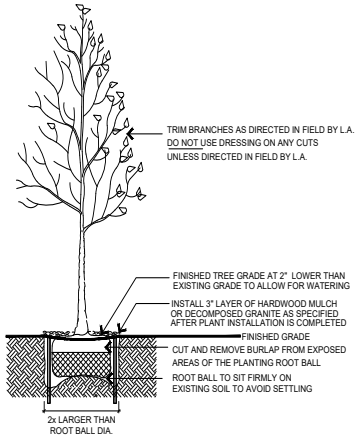

e Tree Installation
Scale: NTS

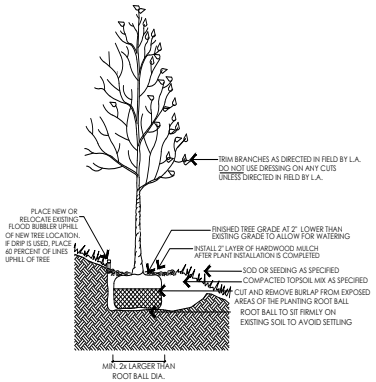

f Tree On Slope Installation
Scale: NTS

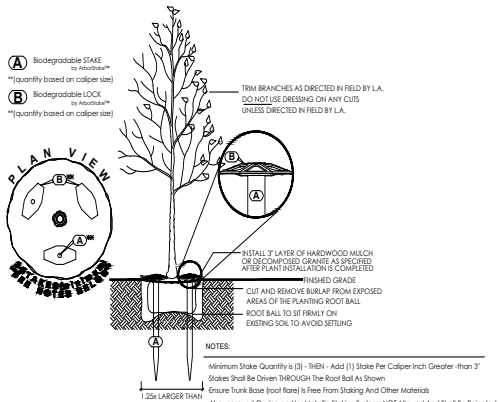

g Tree Staking
Scale: NTS

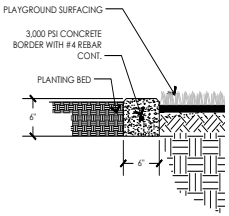

h Concrete Border
Scale: NTS

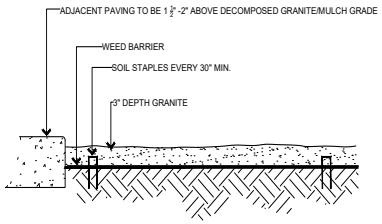

i Decomposed Granite Installation
Scale: NTS

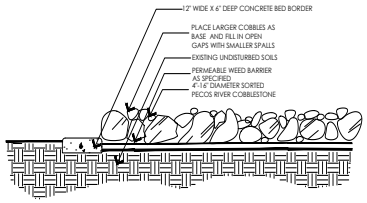

j Large Rock Installation
Scale: NTS

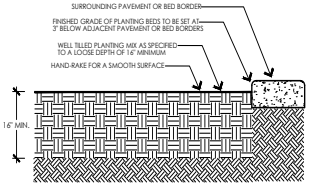

k Planting Bed Prep
Scale: NTS

4.1365

PROFESSIONAL SEAL

LOGO / CONTACT

KDCA ssociates
25 Years
-Established 1994-
Environmental Design + Planning Solutions
www.kdcassociates.com 4401 N. Big Spring, Ste. 203, Midland, Texas 79705 432.686.8020

DESIGN TEAM

Architectural
Martinez Architects

Civil Engineer
Maverick Engineering

Structural
Matrix Structural Engineers

M/E/P/T
DBR

Landscape Architect
KDC Associates

FIRE STATION #11
CITY OF MIDLAND
BRIARWOOD AVE. & GOLDEN GATE DR.
MIDLAND TEXAS 79701

ISSUE

100% DESIGN DEVELOPMENT
22-MAY-2019

75% CONSTRUCTION DOCUMENT
26-JUN-2019

100% ISSUE FOR PERMIT
30-JUL-2019

100% ISSUE FOR APPROVAL TO BID
16-JAN-2020

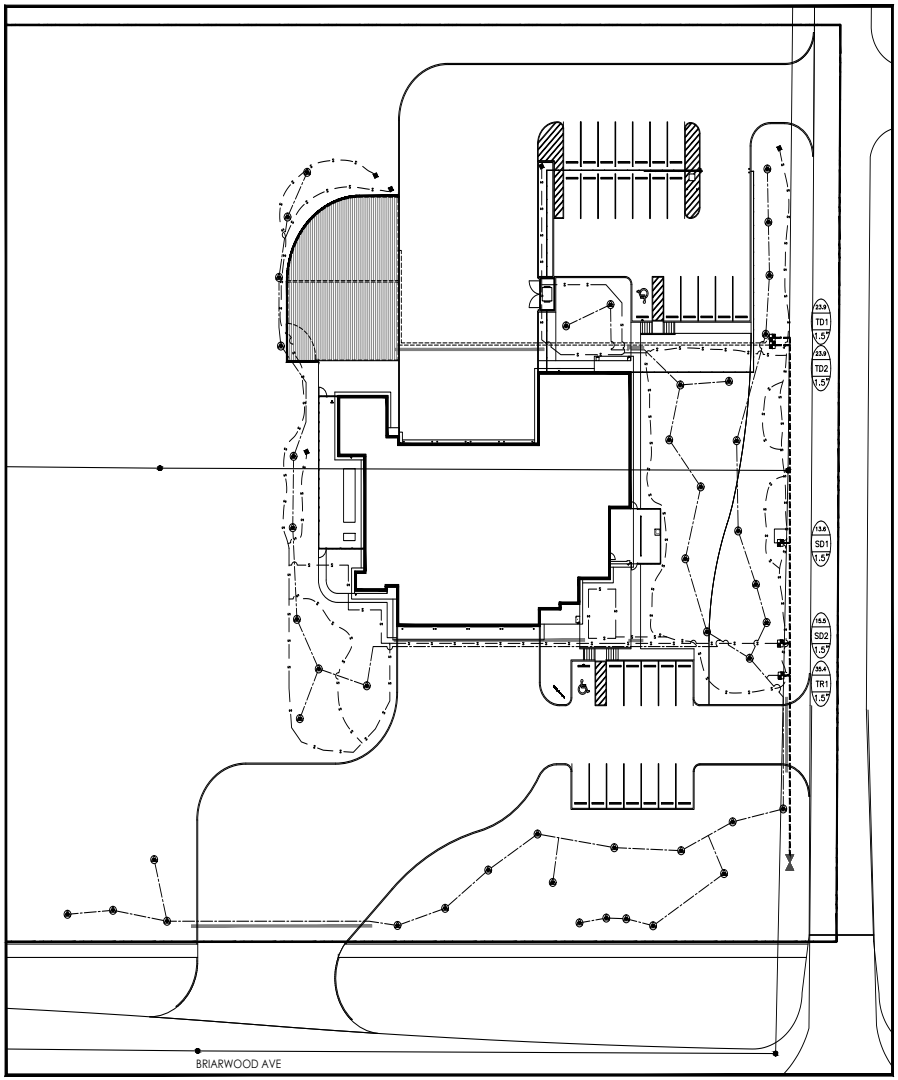

01 Irrigation Plan

SCALE: 1" = 30'-0"

0 15 30 60

IRRIGATION KEY

SYMBOL	DESCRIPTION	SPECIFIED TYPE	REMARKS
	DRIP RING	TREE DRIP RING; NETAFIM TECHLINE	(45) .9 GPH EMITTERS
	DRIP VALVE ASSEMBLY	RAINBIRD XCZ DRIP SCRUBBER VALVE ASSEMBLY W/ SCREEN FILTER AND PRESSURE REGULATOR	INSTALL PER MANUFACTURER'S SPECIFICATIONS; XCZ-150-LCDR
	XERIBUG EMITTERS (NOT SHOWN)	RAINBIRD XERIBUG EMITERS	SEE EMITTER SCHEDULE; INSTALL # SHOWN DIRECTLY INTO 1" DRIP LINE
	DRIP DISTRIBUTION TUBING	RAINBIRD XQ 1/4" DRIP TUBE	INSTALL BETWEEN EMITTER AND PLANT; MAX. RUN OF 8'
	BACKFLOW DEVICE	1-1/2" FEBCO 825 Y SERIES RPZ	INSTALL IN HOTBOX ON CONCRETE PEDESTAL
	PVC SLEEVE	2X DIAMETER OF PIPE	EXTEND BEYOND PAVEMENT
	SHRUB DRIP LINE	1" LANDSCAPE PRODUCTS DRIP LINE	LP1200 1" DRIP LINE BY LANDSCAPE PRODUCTS; INSTALL NO MORE THAN 8' FROM PLANT
	TURF DRIP AREA	NETAFIM TECHLINE	.9 GPH EMITTERS SPACED 12" X 12" ROW SPACING
	NEW 2" MAINLINE	PVC CL 200 SDR 21	2" CLASS 200 PVC MAINLINE
	TREE DRIP HEADER	CLASS 200 PVC SIZED AS SHOWN	PRIME ALL JOINTS. JOINTS 2" AND OVER SHOULD BE SANDED.
	TURF DRIP HEADER	CLASS 200 PVC SIZED AS SHOWN	PRIME ALL JOINTS. JOINTS 2" AND OVER SHOULD BE SANDED.
	FLUSH CAP	END LINE FLUSH CAP	INSTALL AT END OF EACH DRIP LINE
C	AUTOMATIC CONTROLLER	RAINBIRD ESP-ME	CONFIRM LOCATION W/ OWNER; INSTALL IN MECH. YARD

60.6 — GPM OF ZONE
20 — VALVE NUMBER
2" — VALVE SIZE
VALVE ID TAG

EMITTER SCHEDULE

PLANT	EMITTER GPH	# OF EMITTERS
RED YUCCA	.5 GPH	2
GOPHER PLANT	.5 GPH	2
BEAKED YUCCA	.5 GPH	1
SOTOL	.5 GPH	2
OCOTILLO	.5 GPH	1
SILVERADO SAGE	2 GPH	5
MEXICAN FEATHER GRASS	1 GPH	3
BLONDE AMBITION GRAMMA	1 GPH	3
RED BIRD OF PARADISE	2 GPH	5

IRRIGATION NOTES:

1. IT IS THE CONTRACTOR'S RESPONSIBILITY TO REVIEW PLANS, SPECIFICATIONS AND THE CONSTRUCTION SITE TO BECOME FAMILIAR WITH THE PROJECT. CONTRACTOR IS TO CONTACT APPROPRIATE AUTHORITIES FOR LOCATING ALL UTILITIES PRIOR TO CONSTRUCTION. NOTIFY ONE-CALL AT 811 OR AT THE WEB SITE WWW.DIGTESS.ORG. PLANS AND SPECIFICATION WILL BE STRICTLY ADHERED TO. DURING INSTALLATION ROUTINE INSPECTION FOR COMPLIANCE WILL TAKE PLACE. NONCONFORMING WORK WILL BE REMOVED AND CORRECTED TO THE OWNER'S SATISFACTION.

2. IT IS SOLELY THE RESPONSIBILITY OF THE CONTRACTOR TO COMPLY WITH CITY, STATE AND LOCAL ORDINANCES, RULES, CODES AND PERMITTING PERTAINING TO THIS WORK. AS PER TCEQ REQUIREMENTS, A LICENSED IRRIGATOR OR AN IRRIGATION TECHNICIAN MUST BE ON-SITE DURING THE INSTALLATION OF THE IRRIGATION SYSTEM. LICENSED IRRIGATOR(S) WILL SUPERVISE AN IRRIGATION TECHNICIAN WHEN CONNECTING AN IRRIGATION SYSTEM TO A WATER SUPPLY OR INSTALLING, MAINTAINING, ALTERING, REPAIRING, OR SERVICING AN IRRIGATION SYSTEM, AND/OR SUPERVISE AN INSTALLER CONNECTING AN IRRIGATION SYSTEM TO A WATER SUPPLY.

3. VERIFY STATIC PRESSURE TO BE SUFFICIENT FOR SYSTEM PERFORMANCE. NOTIFY IRRIGATION DESIGNER IF PRESSURE IS LESS THAN REQUIRED BY THE DESIGN.

4. POINT OF CONNECTION WILL BE WATER METER AS SHOWN. VOLUME AND PRESSURE NOT AVAILABLE AT TIME OF DESIGN. VERIFY AND COORDINATE AS REQUIRED TO PROVIDE A FULLY AND PROPERLY FUNCTIONING SYSTEM.

5. IRRIGATION DRAWING IS A SCHEMATIC REPRESENTATION. ALL MAINLINE TIE-IN LOCATIONS AND LATERAL PIPING TO BE LOCATED IN PLANTING AREAS. WHERE PIPE MUST PASS BENEATH FLATWORK AND ROADWAYS, SLEEVES ARE TO BE PROVIDED AND STUBBED-UP AS DETAILED. ANY PIPE, HEADS, COMPONENTS, ETC SHOWN IN ASPHALT OR CONCRETE ARE SHOWN FOR CLARITY ONLY.

6. DRIP ZONE VALVES TO BE PRECEDED BY A LINE SIZED SPEARS SCHEDULE 80 ISOLATION VALVE. ALL ZONE VALVES TO BE INSTALLED IN RECTANGULAR VALVE BOXES AS NOTED. IT IS DESIRABLE TO INSTALL MULTIPLE VALVES IN A SINGLE VALVE BOX OF ADEQUATE SIZE ALLOWING FOR FUTURE ACCESS. A VALVE TAG WILL BE SECURED TO THE VALVE BOX LID, CHRISTY ID TAG OR EQUAL.

7. CONTROLLER IS A NEW RAINBIRD ESP-LXME CONTROLLER INSTALLED WALL OF MECHANICAL YARD. ALL LOW VOLTAGE WIRING TO BE SIZED AS NEEDED UF DIRECT BURY WIRE. WIRE CONNECTIONS TO BE MADE WITH DBYR 600V WATER PROOF CONNECTORS AT ALL SPLICES. PROVIDE A WIRE LOOP IN VALVE BOXES THAT WILL EXTEND A MINIMUM OF 36" ABOVE GRADE FOR ALL CONNECTIONS AND FUTURE CONNECTIONS. SEAL ALL LOOSE WIRE ENDS WITH SPECIFIED CONNECTORS. DBYR CONNECTORS ARE INTENDED FOR ONE TIME USE ONLY. SHOULD IT BE NECESSARY TO DISCONNECT A SPLICE, DISCARD CONNECTOR AND REPLACE WITH A NEW CONNECTOR. INSTALL WIRING BENEATH PIPE IN TRENCHES. TAPE WIRE TO THE UNDERSIDE OF THE MAINLINE ON 15' INTERVALS. WHERE WIRE MUST BE INSTALLED SEPARATE FROM THE MAINLINE INSTALL IN A 1" SCH 40 GRAY ELECTRICAL CONDUIT. FIELD SPLICES ARE DISCOURAGED OTHER THAN AT VALVES BUT WHERE THEY ARE UNAVOIDABLE AND PRE-APPROVED, INSTALL IN A 10" ROUND SPLICE BOX WITH A 36" ABOVE GRADE EXPANSION LOOP.

8. ALL MAINLINE PIPE DOWNSTREAM OF MAINLINE CONNECTIONS (EXCEPT WHERE NOTED ON THESE PLANS) AND LATERAL PIPE TO BE WHITE CLASS 200 PVC. ALL PIPE 3" AND SMALLER WILL BE SOLVENT WELD PIPE. SOLVENT WELD PVC PIPE AND FITTINGS PER MANUFACTURERS RECOMMENDATIONS. ALL PIPE AND FITTINGS TO BE PRIMED WITH PURPLE PRIMER WITHOUT EXCEPTION. FLOW VELOCITIES WILL GENERALLY DETERMINE PIPE SIZES. IN NO EVENT WILL THE FLOW VELOCITIES BE GREATER THAT 5 FPS. THE 5 FPS RULE IS SUPERSEDED BY ACTUAL PRESSURE LOSS CALCULATIONS. PRESSURE LOSS IN ANY ZONE WILL NOT BE GREATER THAN 10% OF THE RECOMMENDED OPERATING PRESSURE OF THE EMISSION DEVICE. PIPE SIZES WILL BE INCREASED TO COMPLY WITH THIS SPECIFICATION.

9. ALL SOLVENT WELD FITTINGS TO BE SCHEDULE 40, THREADED FITTINGS TO BE SCHEDULE 80. WHERE METAL FITTINGS OCCUR, ONLY SCHEDULE 80 MALE PVC THREADED INTO METAL FEMALE PIPE FITTINGS AND/OR GLASS-FILLED NYLON VALVES WILL BE ACCEPTED. CLOSE BY CLOSE SOLVENT WELDING OF FITTINGS WILL NOT BE ALLOWED. ALL FITTINGS WILL BE JOINED BY SUFFICIENT PIPE LENGTHS ALLOWING FUTURE REPAIRS AND/OR MODIFICATIONS.

10. SOLVENT WELD PIPE CONNECTION WILL BE MADE WITH APPROVED GLUE & PRIMER ONLY. PRIMER WITH PIGMENTATION WILL BE USED ON ALL SOLVENT WELD CONNECTIONS. WELD-ON P68 OR P70 PURPLE PRIMER. GLUE WILL BE WELD-ON 710 FOR PIPE UP TO 2". WELD-ON 705 OR 795 FOR PIPE UP TO 4". APPLY CEMENT TO PIPE SPIGOT FIRST, THEN TO FITTING TO AVOID EXCESS CEMENT BUILDUP INTERIOR TO FITTING AND PIPE. TWIST PIPE ¼ TURN, HOLD IN PLACE FOR 30 SECONDS AND WIPE EXCESS CEMENT FROM EXTERIOR SURFACES. GLUE AND CLEANER WILL BE SUBMITTAL ITEMS. SOLVENT WELDING OF PIPE IN WET CONDITIONS AND/OR IF THE OUTSIDE AMBIENT AIR TEMPERATURE FALLS BELOW THE MANUFACTURERS RECOMMENDED THRESHOLD, SHALL NOT OCCUR UNLESS DIRECTED BY THE IRRIGATION DESIGNER. FOR PROPER SOLVENT WELDING OF PIPE AND FITTINGS, CEMENT APPLICATOR MUST BE NO LESS THAN HALF THE SIZE OF THE PIPE.

11. MAINLINE PIPING WILL BE FLUSHED PRIOR TO INSTALLING CONTROL VALVES. LATERAL PIPING WILL BE FLUSHED PRIOR TO INSTALLING NOZZLES. DRIP IRRIGATION WILL BE THOROUGHLY FLUSHED PRIOR TO INSTALLING FLUSH AND AIR RELIEF VALVES. WITH WATER RUNNING BEGIN CLOSEST TO THE ZONE VALVE INSTALLING NOZZLES OR DRIP FLUSH AND AIR VALVES. THE MOST DISTANT DEVICE ON THE ZONE WILL BE THE LAST DEVICE INSTALLED.

12. SEE DETAILS FOR REQUIRED PIPE AND VALVE DEPTHS. PIPE AND WIRING WILL BE INITIALLY COVERED WITH A 6" MINIMUM OF FINE MATERIAL FROM EXCAVATIONS. IMPORT FILL MATERIAL IF EXCAVATIONS ARE NOT SUITABLE FOR COVERING AND BACKFILLING OF ALL TRENCHES. ROCKS OR OTHER OBJECTS GREATER THAN 3/4" IN DIAMETER WILL NOT BE ALLOWED IN CONTACT WITH PIPE OR WIRING.

13. THE INTENT OF DRAWINGS IS TO PROVIDE 100% PLUS COVERAGE FOR ALL PLANT MATERIALS. SPRINKLER HEAD LOCATIONS MAY REQUIRE MODIFICATION DUE TO CHANGES IN THE SITE, DESIGN DEFICIENCIES, OR OTHER CHANGES UNFORESEEN AT THE TIME OF DESIGN. FINAL HEAD PLACEMENT AND COVERAGE WILL BE APPROVED BY THE IRRIGATION DESIGNER. CONTRACTOR IS RESPONSIBLE FOR ACHIEVING 100% COVERAGE OF THE IRRIGATION SYSTEM AS SHOWN ON THE FOLLOWING SHEETS. IF ALTERATIONS OR MODIFICATIONS ARE REQUIRED TO ACHIEVE 100% COVERAGE, IT SHALL BE BROUGHT TO THE ATTENTION OF, AND THE NEW LAYOUT STAKED, THE OWNER'S REPRESENTATIVE AND/OR THE IRRIGATION DESIGNER FOR APPROVAL.

14. A FINAL SCALED AS-BUILT DRAWING WILL BE FURNISHED BY THE CONTRACTOR UPON COMPLETION OF THE PROJECT AND PRIOR TO FINAL PAYMENT. ACCURATE RED LINE AS BUILDS WILL BE MAINTAINED IN THE CONSTRUCTION OFFICE UPDATED NO LESS THAN EVERY SEVEN DAYS. ITEMS TO DOCUMENT INCLUDE MAINLINE, WIRE PATH DRAWN SCHEMATICALLY, VALVES, ISOLATION VALVES, SPLICE BOXES AND ANY EQUIPMENT INCORPORATED INTO THE WORK THAT MAY NEED TO BE LOCATED AT A FUTURE TIME. EACH ITEM WILL HAVE TWO MEASUREMENTS FROM FIXED OBJECTS. OBJECTS WILL BE PERMANENT FEATURES AND WILL OCCUR AT DIFFERING ANGLES FROM THE DEVICE.

16. SUBMITTALS WILL BE REQUIRED FOR PRE-APPROVAL OF ALL MATERIALS TO BE INCORPORATED INTO THE IRRIGATION SYSTEM. IN THE EVENT THAT MORE THAN ONE PRODUCT MAY BE USED (I.E. PIPE AND FITTINGS), SUBMIT EACH FOR APPROVAL. MATERIALS NOT SUBMITTED WILL BE REMOVED FROM THE SITE AT THE COST OF THE CONTRACTOR AND AT NO COST TO THE OWNER.

17. THE UNDERGROUND IRRIGATION SYSTEM SHALL BE GUARANTEED AGAINST DEFECTS IN MATERIALS AND WORKMANSHIP FOR ONE YEAR FOLLOWING FINAL ACCEPTANCE OF THE WORK.

TURF DRIP VALVE SCHEDULE

NUMBER	MODEL	SIZE	GPM
TD1	TURF DRIP	1.5"	23.9
TD2	TURF DRIP	1.5"	23.9

SHRUB DRIP VALVE SCHEDULE

NUMBER	MODEL	SIZE	GPM
SD1	SHRUB DRIP	1.5"	13.6
SD2	SHRUB DRIP	1.5"	15.5

TREE DRIP VALVE SCHEDULE

NUMBER	MODEL	SIZE	GPM
TR1	TREE DRIP	1.5"	35.4

4.1366

PROFESSIONAL SEAL

LOGO / CONTACT

KDCA ssociates
25 Years
-Established 1994-
Environmental Design + Planning Solutions
www.kdcassociates.com 4400 N. Big Spring, Ste. 203, Midland, Texas 79705 432.686.8020

DESIGN TEAM

Architectural
Martinez Architects

Civil Engineer
Maverick Engineering

Structural
Matrix Structural Engineers

M/E/P/T
DBR

Landscape Architect
KDC Associates

FIRE STATION #11
CITY OF MIDLAND
BRIARWOOD AVE. & GOLDEN GATE DR.
MIDLAND TEXAS 79701

ISSUE

100% DESIGN DEVELOPMENT
22-MAY-2019

75% CONSTRUCTION DOCUMENT
26-JUN-2019

100% ISSUE FOR PERMIT
30-JUL-2019

100% ISSUE FOR APPROVAL TO BID
16-JAN-2020

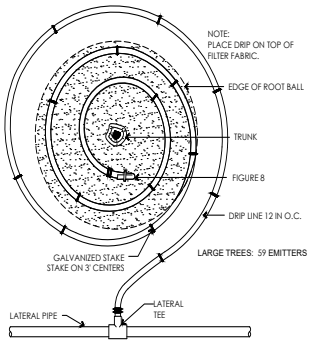

a Tree Drip Ring

Scale: NTS

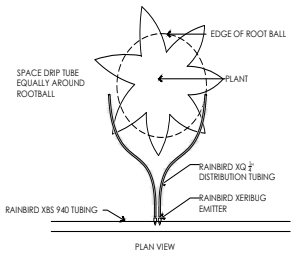

b Shrub Drip

Scale: NTS

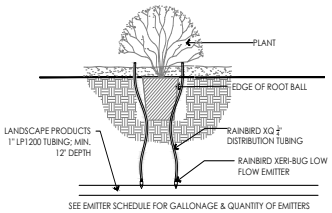

c Shrub Drip

Scale: NTS

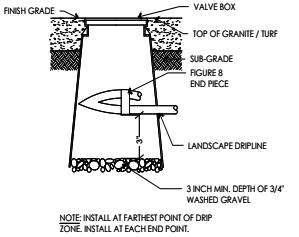

d Drip Flush

Scale: NTS

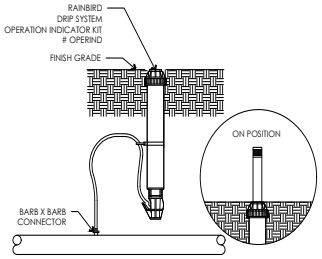

e Drip Zone Indicator

Scale: NTS

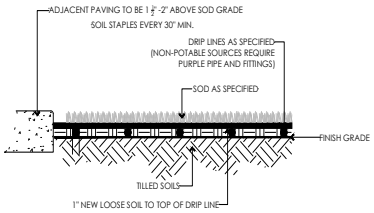

f Turf Drip Installation

Scale: NTS

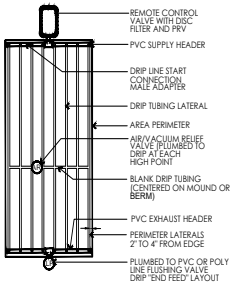

g Turf Drip Layout

Scale: NTS

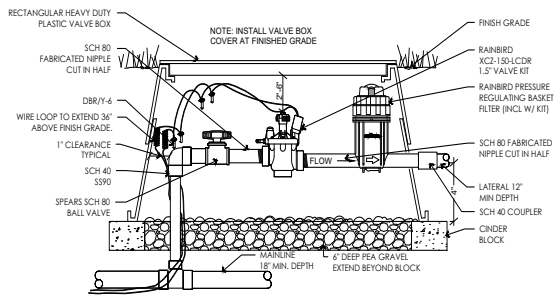

h Drip Valve Installation

Scale: NTS

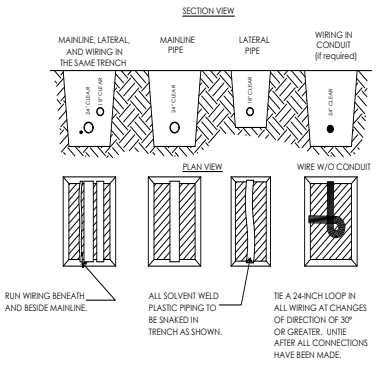

i Trenching Details/Pipe Depths

Scale: NTS

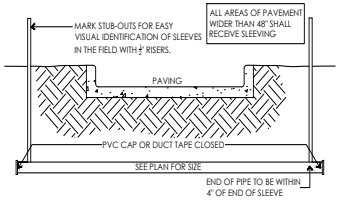

j Pipe Sleeving

Scale: NTS

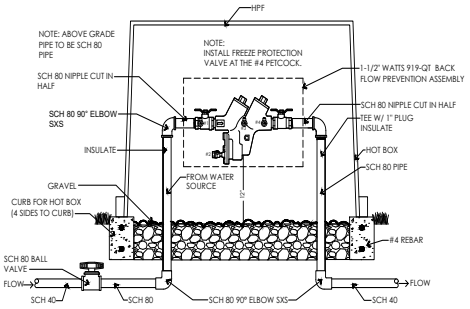

k Backflow

Scale: NTS

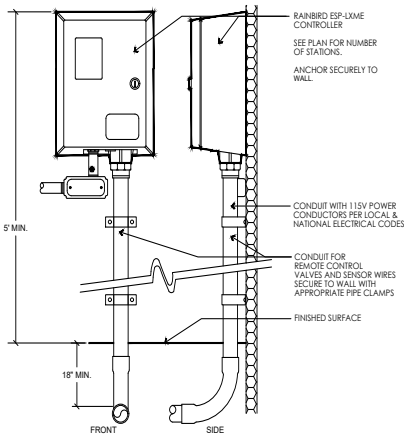

l Automatic Controller

Scale: NTS

4.1367

PROFESSIONAL SEAL

LOGO / CONTACT

KDCA associates
25 Years
-Established 1994-
Environmental Design + Planning Solutions
www.kdcassociates.com 4303 N. Big Spring, Ste. 203, Midland, Texas 79705 432.684.8020

DESIGN TEAM

Architectural
Martinez Architects

Civil Engineer
Maverick Engineering

Structural
Matrix Structural Engineers

M/E/P/T
DBR

Landscape Architect
KDC Associates

FIRE STATION #11
CITY OF MIDLAND
BRIARWOOD AVE. & GOLDEN GATE DR.
MIDLAND TEXAS 79701

ISSUE

100% DESIGN DEVELOPMENT 22-MAY-2019
75% CONSTRUCTION DOCUMENT 26-JUN-2019
100% ISSUE FOR PERMIT 30-JUL-2019
100% ISSUE FOR APPROVAL TO BID 16-JAN-2020

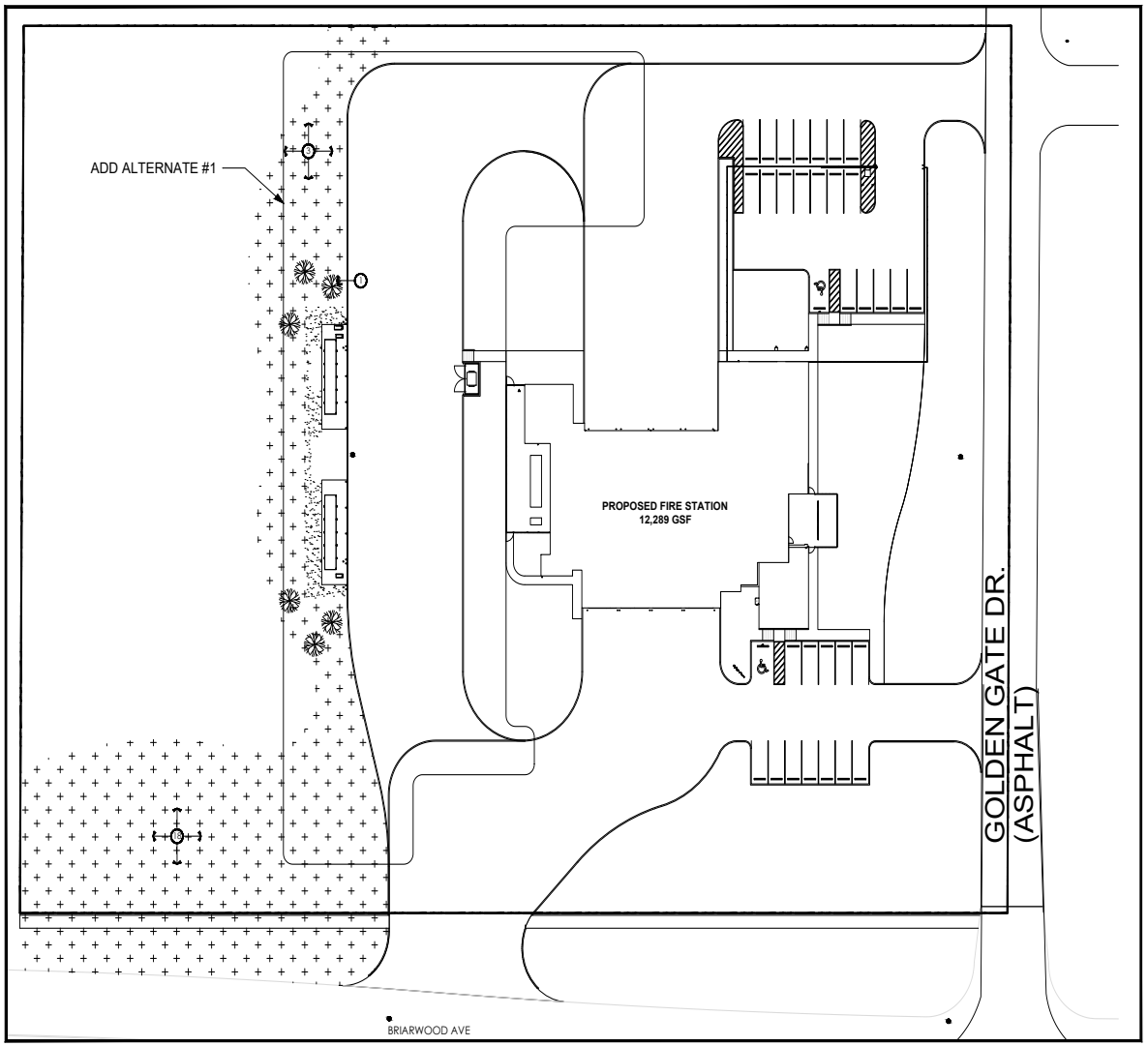

PLANTING MATERIALS :

1. VITEX AGNUS CASTUS - VITEX; (7); 3" CALIPER; MULTI-TRUNK WITH SIMILAR CANOPY SIZE, HEIGHT, AND SHAPE. 95 GALLON CONTAINER GROWN ONLY. PLACE AS SHOWN WITH A MIN. 10'-0" FROM EDGE OF PAVEMENT. PRUNE TO DISCRETION OF LANDSCAPE ARCHITECT ON SITE. TYPICAL PLAN SYMBOL:

2. 1/2" SCREENED DECOMPOSED GRANITE AREA; (1,175 SQ.FT. VERIFY) INSTALL OVER PERMEABLE GEOTEXTILE MIN. 3" DEEP. PROVIDE SUBMITTALS AND REFER TO SPECIFICATIONS. ALL BED AREAS UNLESS OTHERWISE NOTED. TYPICAL PLAN SYMBOL:

3. HYDROSEEDED AREA; (31,596 SQ. FT. VERIFY) SEE HYDROSEED PLAN FOR MIXES; PROVIDE SUBMITTALS AND REFER TO SPECIFICATIONS. TYPICAL PLAN SYMBOL:

GENERAL PLANTING NOTES:

A. SEE L-2.0 FOR IRRIGATION PLANS. NO SUBSTITUTIONS OR DEVIATIONS FROM THESE PLANS SHALL BE ALLOWED OR ACCEPTED WITHOUT WRITTEN CONSENT FROM THE LANDSCAPE ARCHITECT.

B. ALL PLANTING HOLES FOR SHRUBS SHALL BE DUG TO A MINIMUM DIMENSION OF 36" WIDE X 18" DEEP. MECHANICAL EXCAVATION OF THESE HOLES MAY BE NECESSARY.

C. ALL PLANTING HOLES FOR TREES SHALL BE DUG TO A MINIMUM DIMENSION OF 60" WIDE X 36" DEEP. MECHANICAL EXCAVATION OF THESE HOLES MAY BE NECESSARY.

D. TREE PLACEMENT WILL BE STAKED PRIOR TO INSTALLATION. NO TREES MAY BE PLANTED DIRECTLY ABOVE THE CITY WATER OR SEWER LINES. ADJUSTMENT SHALL BE MADE IN THE FIELD AS NECESSARY TO AVOID PLACEMENT ISSUES.

E. PLANTING SOIL SHALL ONLY BE REQUIRED FOR THE PLANTING WELL OF EACH TREE OR SHRUB.

CRITICAL NOTES:

1. PRIOR TO INSTALLATION, LANDSCAPE CONTRACTOR SHALL HAVE ALL PLANT AND TREE MATERIAL REVIEWED IN A LOCAL NURSERY/HOLDING AREA. LANDSCAPE ARCHITECT HAS THE RIGHT TO REJECT ANY/ALL PLANT, TREE, STONE, OR OTHER CONSTRUCTION MATERIALS IF HE FEELS THAT THEY DO NOT MEET THE INTENDED QUALITY OF THE PROJECT. IN SUCH CASE, ALL ASSOCIATED COST WITH ACQUIRING, SHIPPING, AND INSTALLING NEW MATERIAL SHALL SOLELY BE AT THE COST OF THE LANDSCAPE CONTRACTOR. THIS PRACTICE MAY BE REPEATED AS MANY TIMES AS NECESSARY IN ORDER TO ACHIEVE THE DESIRED QUALITY. THEREFORE, IT IS CRITICAL THAT THE LANDSCAPE CONTRACTOR PURCHASE AND PROVIDE HIGH-QUALITY MATERIAL UPON SUCCESSFUL BIDDING AND AWARD OF THE PROJECT.

2. PRIOR TO ANY DIGGING, CONTRACTOR SHALL CONTACT AND COORDINATE WITH 1-800-DIG-TESS, www.DIGTESS.COM, IN ORDER TO VERIFY EXISTENCE AND DETERMINE EXACT LOCATION OF ANY AND ALL KNOWN UNDERGROUND UTILITIES. CONTRACTOR SHALL NOT DIG PRIOR TO DIGTESS SITE RESULTS AND MARKINGS. ALL UNDERGROUND UTILITIES SHOWN IN THESE LANDSCAPE AND IRRIGATION PLAN SETS ARE TO BE CONSIDERED DIAGRAMMATIC AND GENERAL IN LOCATION PRIOR TO EXACT DETERMINATION BY DIGTESS AND OTHERS.

3. ALL QUANTITIES SHOWN ON THESE SEALED PLANS SHOULD BE FIELD VERIFIED BY THE CONTRACTOR PRIOR TO BIDDING. WHERE DISCREPANCIES ARISE, CONTRACTOR TO CONTACT THE LANDSCAPE ARCHITECT IMMEDIATELY FOR FURTHER DETERMINATION ON QUANTITIES TO BE PLACED IN THE FIELD.

4. ALL ELEMENTS OF THE LANDSCAPE PLANS SHALL MEET OR EXCEED TEXAS ACCESSIBILITY STANDARDS AS WELL AS STANDARDS SET FORTH BY THE AMERICANS WITH DISABILITIES ACT. THE CONTRACTOR SHALL FIELD VERIFY THAT ALL SLOPES, DISTANCES, OR OTHER MEASUREMENTS AND STANDARDS MEET STATE AND FEDERAL ACCESSIBILITY REQUIREMENTS. WHEN IT IS DETERMINED IN THE FIELD THAT CONDITIONS HAVE INFLUENCED THE CAPACITY OF THE DESIGN TO MEET THESE STANDARDS, THE CONTRACTOR SHALL IMMEDIATELY CONTACT THE LANDSCAPE ARCHITECT SO THAT A VIABLE SOLUTION CAN BE AGREED UPON. FAILURE TO DO SO MAY RESULT IN THE PROJECT NOT BEING ACCEPTED.

LANDSCAPE-ADD ALT 1

01 Landscape Plan
SCALE: 1" = 30'-0"

0 15 30 60

4.1368

PROFESSIONAL SEAL

LOGO / CONTACT

KDCA ssociates
25 Years
-Established 1994-
Environmental Design + Planning Solutions
www.kdcassociates.com 4400 N. Big Spring, Ste. 203, Midland, Texas 79705 432.686.8020

DESIGN TEAM

Architectural
Martinez Architects

Civil Engineer
Maverick Engineering

Structural
Matrix Structural Engineers

M/E/P/T
DBR

Landscape Architect
KDC Associates

FIRE STATION #11
CITY OF MIDLAND
BRIARWOOD AVE. & GOLDEN GATE DR.
MIDLAND TEXAS 79701

ISSUE
100% DESIGN DEVELOPMENT 22-MAY-2019
75% CONSTRUCTION DOCUMENT 26-JUN-2019
100% ISSUE FOR PERMIT 30-JUL-2019
100% ISSUE FOR APPROVAL TO BID 16-JAN-2020

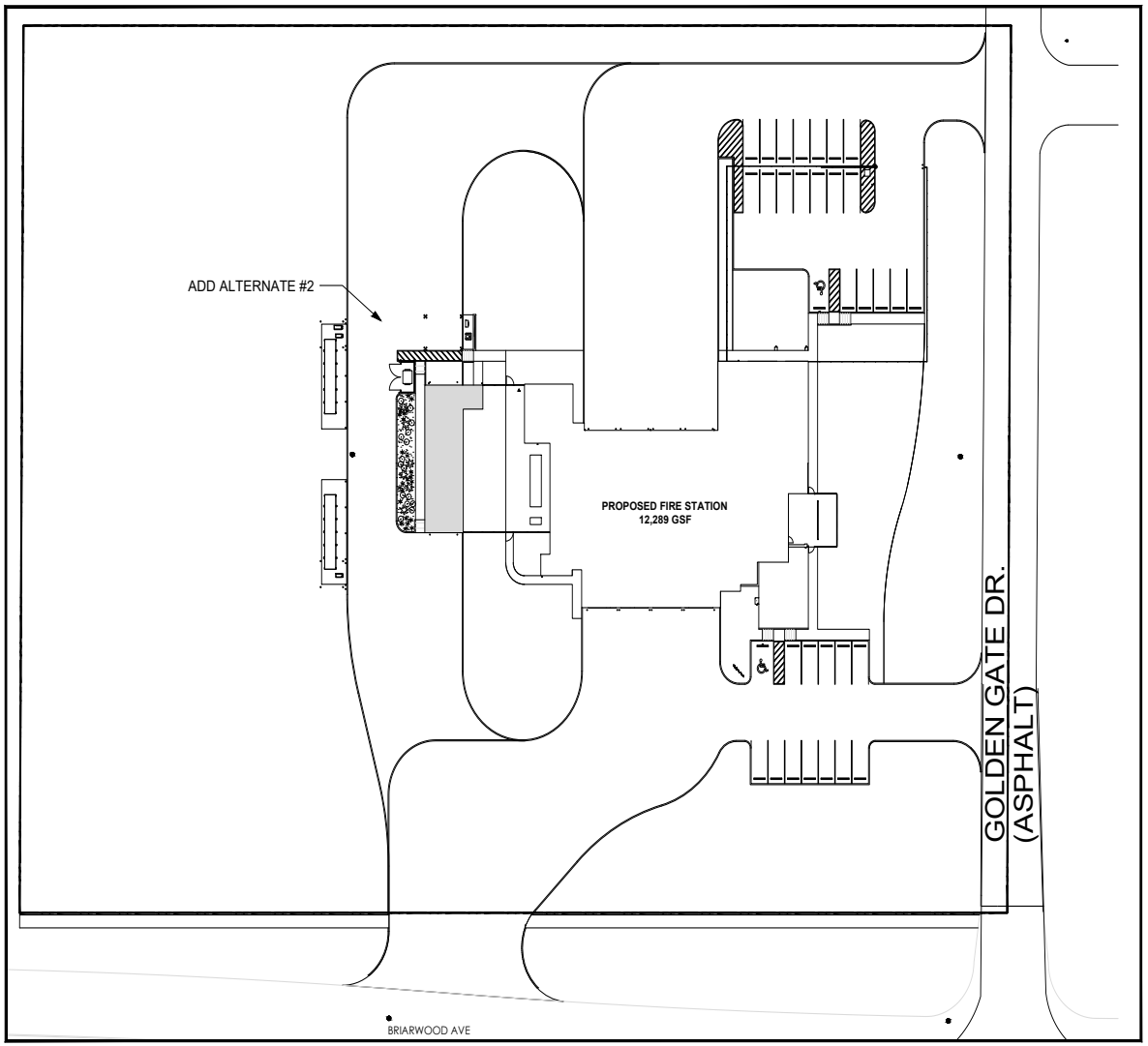

PLANTING MATERIALS :

1. YUCCA ROSTRATA - BEAKED YUCCA; (6); 4' MIN. HEIGHT, 4' MIN TRUNK; CONTAINER GROWN ONLY. — TYPICAL PLAN SYMBOL:
2. STIPA TENNUISSIMA - MEXICAN FEATHER GRASS; (15) 1 GALLON CONTAINER GROWN; MIN. 12" WIDE X 18" TALL: VERY FULL. — TYPICAL PLAN SYMBOL:
3. BOUTELOUA GRACILIMUS 'BLONDE AMBITION' - BLONDE AMBITION GRAMMA GRASS; (23) 1 GALLON; CONTAINER GROWN; 12" WIDE X 12" TALL — TYPICAL PLAN SYMBOL:
4. 1/2" SCREENED DECOMPOSED GRANITE AREA; (600 SQ.FT. VERIFY) INSTALL OVER PERMEABLE GEOTEXTILE MIN. 3" DEEP. PROVIDE SUBMITTALS AND REFER TO SPECIFICATIONS. ALL BED AREAS UNLESS OTHERWISE NOTED. — TYPICAL PLAN SYMBOL:

GENERAL PLANTING NOTES:

A. SEE L-2.0 FOR IRRIGATION PLANS. NO SUBSTITUTIONS OR DEVIATIONS FROM THESE PLANS SHALL BE ALLOWED OR ACCEPTED WITHOUT WRITTEN CONSENT FROM THE LANDSCAPE ARCHITECT.

B. ALL PLANTING HOLES FOR SHRUBS SHALL BE DUG TO A MINIMUM DIMENSION OF 36" WIDE X 18" DEEP. MECHANICAL EXCAVATION OF THESE HOLES MAY BE NECESSARY.

C. ALL PLANTING HOLES FOR TREES SHALL BE DUG TO A MINIMUM DIMENSION OF 60" WIDE X 36" DEEP. MECHANICAL EXCAVATION OF THESE HOLES MAY BE NECESSARY.

D. TREE PLACEMENT WILL BE STAKED PRIOR TO INSTALLATION. NO TREES MAY BE PLANTED DIRECTLY ABOVE THE CITY WATER OR SEWER LINES. ADJUSTMENT SHALL BE MADE IN THE FIELD AS NECESSARY TO AVOID PLACEMENT ISSUES.

E. PLANTING SOIL SHALL ONLY BE REQUIRED FOR THE PLANTING WELL OF EACH TREE OR SHRUB.

CRITICAL NOTES:

1. PRIOR TO INSTALLATION, LANDSCAPE CONTRACTOR SHALL HAVE ALL PLANT AND TREE MATERIAL REVIEWED IN A LOCAL NURSERY/HOLDING AREA. LANDSCAPE ARCHITECT HAS THE RIGHT TO REJECT ANY/ALL PLANT, TREE, STONE, OR OTHER CONSTRUCTION MATERIALS IF HE FEELS THAT THEY DO NOT MEET THE INTENDED QUALITY OF THE PROJECT. IN SUCH CASE, ALL ASSOCIATED COST WITH ACQUIRING, SHIPPING, AND INSTALLING NEW MATERIAL SHALL SOLELY BE AT THE COST OF THE LANDSCAPE CONTRACTOR. THIS PRACTICE MAY BE REPEATED AS MANY TIMES AS NECESSARY IN ORDER TO ACHIEVE THE DESIRED QUALITY. THEREFORE, IT IS CRITICAL THAT THE LANDSCAPE CONTRACTOR PURCHASE AND PROVIDE HIGH-QUALITY MATERIAL UPON SUCCESSFUL BIDDING AND AWARD OF THE PROJECT.

2. PRIOR TO ANY DIGGING, CONTRACTOR SHALL CONTACT AND COORDINATE WITH 1-800-DIG-TESS, www.DIGTESS.COM, IN ORDER TO VERIFY EXISTENCE AND DETERMINE EXACT LOCATION OF ANY AND ALL KNOWN UNDERGROUND UTILITIES. CONTRACTOR SHALL NOT DIG PRIOR TO DIGTESS SITE RESULTS AND MARKINGS. ALL UNDERGROUND UTILITIES SHOWN IN THESE LANDSCAPE AND IRRIGATION PLAN SETS ARE TO BE CONSIDERED DIAGRAMMATIC AND GENERAL IN LOCATION PRIOR TO EXACT DETERMINATION BY DIGTESS AND OTHERS.

3. ALL QUANTITIES SHOWN ON THESE SEALED PLANS SHOULD BE FIELD VERIFIED BY THE CONTRACTOR PRIOR TO BIDDING. WHERE DISCREPANCIES ARISE, CONTRACTOR TO CONTACT THE LANDSCAPE ARCHITECT IMMEDIATELY FOR FURTHER DETERMINATION ON QUANTITIES TO BE PLACED IN THE FIELD.

4. ALL ELEMENTS OF THE LANDSCAPE PLANS SHALL MEET OR EXCEED TEXAS ACCESSIBILITY STANDARDS AS WELL AS STANDARDS SET FORTH BY THE AMERICANS WITH DISABILITIES ACT. THE CONTRACTOR SHALL FIELD VERIFY THAT ALL SLOPES, DISTANCES, OR OTHER MEASUREMENTS AND STANDARDS MEET STATE AND FEDERAL ACCESSIBILITY REQUIREMENTS. WHEN IT IS DETERMINED IN THE FIELD THAT CONDITIONS HAVE INFLUENCED THE CAPACITY OF THE DESIGN TO MEET THESE STANDARDS, THE CONTRACTOR SHALL IMMEDIATELY CONTACT THE LANDSCAPE ARCHITECT SO THAT A VIABLE SOLUTION CAN BE AGREED UPON. FAILURE TO DO SO MAY RESULT IN THE PROJECT NOT BEING ACCEPTED.

LANDSCAPE-ADD ALT 2

01 Landscape Plan
SCALE: 1" = 30'-0"

0 15 30 60

4.1369

PROFESSIONAL SEAL

LOGO / CONTACT

KDCA associates
25 Years
-Established 1994-
Environmental Design + Planning Solutions
www.kdcassociates.com 4400 N. Big Spring, Ste. 203, Midland, Texas 79705 432.686.8020

DESIGN TEAM

Architectural
Martinez Architects

Civil Engineer
Maverick Engineering

Structural
Matrix Structural Engineers

M/E/P/T
DBR

Landscape Architect
KDC Associates

FIRE STATION #11
CITY OF MIDLAND
BRIARWOOD AVE. & GOLDEN GATE DR.
MIDLAND TEXAS 79701

ISSUE

100% DESIGN DEVELOPMENT 22-MAY-2019
75% CONSTRUCTION DOCUMENT 26-JUN-2019
100% ISSUE FOR PERMIT 30-JUL-2019
100% ISSUE FOR APPROVAL TO BID 16-JAN-2020

PROPERTY DATA

OWNER:	CITY OF MIDLAND	PARKING SPACES PER CODE:	12
		PARKING SPACES PROVIDED:	33
PROPERTY INFORMATION:			
ADDRESS:	6600 BRIARWOOD AVENUE MIDLAND, TX 79707	NO. OF STORIES:	1
		BUILDING HEIGHT:	
LEGAL DESCRIPTION:	LOT 1, BLOCK 1, LLANO COUNTRY	FIRE STATION:	28'
		WASH BAY:	23'
ACREAGE:	5.00 ACRES		

FIRE STATION
BUILDING AREA: 12,289 GSF.
LEVEL 1: 12,289 GSF
MEZZANINE: 961 GSF
BUILDING PERIMETER: 591'

WASH BAY
BUILDING AREA: 1,527 GSF.
BUILDING PERIMETER: 199'

SITE PLAN LEGEND

PROPERTY BOUNDARIES

EASEMENT

PROPOSED FENCE LINE

SITE PLAN KEYED NOTES

1. WOOD PLANK SCREEN WALL-RE: XXX/A103 & STRUCT.
2. HANDICAP-ACCESSIBLE CURB RAMP - RE: 3/A102
3. PAINT ACCESSIBILITY LOGO - RE: DETAIL 1/A102
4. CONCRETE WHEEL STOP RE: 2/A102
5. WHITE PAINTED PARKING LOT STRIPES (4" X 20' LONG @ PARKING STALLS, SPACED 9'-0" O.C.& 4" STRIPES SPACED 36" O.C. @ DIAGONALLY STRIPED) AREAS INDICATED ON PLAN
6. A.D.A. APPROVED HANDICAP RESERVED PARKING SIGN - PROVIDE 1 SIGN BELOW ALL HC SPACES STATING: "$500 - $750 FINE WITHOUT VEHICLE PERMIT". ALL VAN ACCESSIBLE STALLS SHALL BE PROVIDED WITH ADDITIONAL SIGNAGE STATING: "VAN ACCESSIBLE" - RE: 8/A905
7. CONCRETE-FILLED STEEL PIPE BOLLARDS - RE: 6/A102
8. 30' FLAG POLE - RE: 4/A102. PROVIDE FLAG POLE LIGHTING PER ELEC. DWGS.
9. MECHANICAL UNITS
10. RADIO TOWER
11. CHAIN LINK FENCE
12. LANDSCAPE / IRRIGATION AREA - RE: LANDSCAPE DWGS.

SITE PLAN KEYED NOTES

13. 6' SIDEWALK
14. MAILBOX
15. CONCRETE PAVING (RE: CIVIL DRAWINGS). RE: JOINT DETAILS 9 THRU 12 ON SHEET A102

GENERAL NOTES

1. PAINT/MARK FIRE LANE AS REQUIRED (RE: PLAN AND NOTES ON SHEET G003 FOR EXTENT AND REQUIREMENTS OF MARKINGS).
2. INSTALL 6" CONCRETE CURBS AT ALL DRIVES, PARKING, ETC. AT VEHICULAR TRAFFIC AREAS, TYP. (RE: 9/A103)
3. DIMENSIONS TO BACK OF CURB. RE: CIVIL FOR ADDITIONAL SITE WORK DIMENSIONS.
4. 2% MAX. CROSS SLOPE @ ALL CROSSWALKS, ACCESSIBLE ROUTES OF TRAVEL AROUND SITE & AT ALL PASSENGER LOADING/UNLOADING AREAS
5. G.C. TO SUBMIT SIDEWALK JT. LAYOUT FOR ARCHITECT'S APPROVAL. EXPANSION JTS. @ 20'-0" O.C. MAX. SIDEWALKS 4-1/2" CONC. ON 2" SANDBED W/ 6X6 #6 WWF. (RE: CIVIL)
6. CONTRACTOR TO PRELIMINARILY LAY-OUT BUILDING, ONCE LAID OUT, REVIEW WITH ARCHITECT BEFORE PROCEEDING. COORD. ALL DIMENSIONS & REVIEW ANY DISCREPANCIES BEFORE STARTING WORK
7. MAX. DROP AT ALL EXTERIOR DOORS INCLUDING THRESHOLD SHALL BE BETWEEN 1/4" TO 1/2" MAX. (TYP)
8. PAINT ALL OUTDOOR CONDENSER WATER PIPING/VALVES
9. G.C. TO COORDINATE & ENSURE ALL REQ'D. UTILITIES ARE PROVIDED & FUNCTIONING PRIOR TO CONNECTION. G.C. SHALL BE SOLELY RESPONSIBLE FOR FILING ALL DOCUMENTS & NOTIFICATION OF ALL AGENCIES NECESSARY FOR CONNECTION AND/OR INSTALLATION OF SAID SERVICES
10. CONTRACTOR SHALL USE LINE LOCATOR SERVICE BEFORE BEGINNING TRENCHING OR DIGGING WHEN U.G. UTILITIES ARE SUSPECTED. CONTRACTOR SHALL REPAIR ALL UTILITIES DAMAGED
11. RE: SOIL REPORT FOR ALL FILL REQUIREMENTS
12. RE: CIVIL FOR EROSION CONTROL
13. RE: LANDSCAPING / IRRIGATION DRAWINGS FOR LANDSCAPE REQUIREMENTS.
14. G.C. TO COORDINATE OFFSITE UTILITIES INCLUDING:
    - 14.1 DOMESTIC WATER LINE - RE: CIVIL AND PLUMBING
    - 14.2 FIRE WATER LINE - RE:CIVIL AND PLUMBING
    - 14.3 SANITARY SEWER - RE: CIVIL AND PLUMBING
    - 14.4 ELECTRICAL - RE: ELECTRICAL
    - 14.5 NATURAL GAS - RE: PLUMBING
15. G.C. SHALL BE RESPONSIBLE TO COORDINATE CLEARING PLAN APPROVAL WITH OWNER AND ARCHITECT PRIOR TO CONSTRUCTION COORDINATE WITH OWNER AND ARCHITECT FOR TREES TO REMAIN/ AREA TO REMAIN UNDISTURBED PRIOR TO CONSTRUCTION
16.

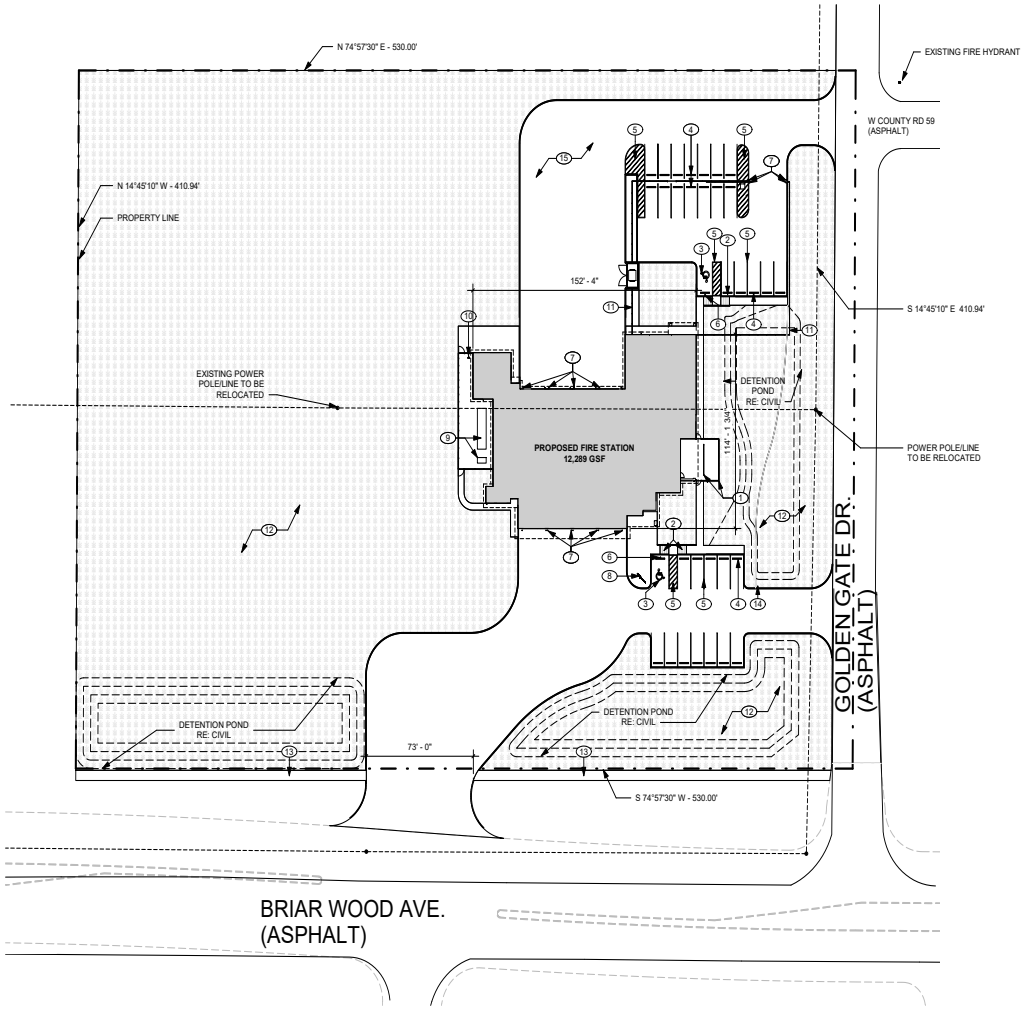

TRUE NORTH | PROJECT NORTH

01 SITE PLAN - BASE BID
SCALE: 1" = 40'-0"

4.1370

PROFESSIONAL SEAL

REGISTERED ARCHITECT JUSTIN E. MYERS 24640 STATE OF TEXAS

LOGO/CONTACT

martinez ARCHITECTS

Martinez Architect, LP
900 Rockmead, Suite 250
Houston, Texas 77339
281.346.7371

DESIGN TEAM

Architectural
Martinez Architects

Civil Engineer
Maverick Engineering

Structural
Matrix Structural engineers

M/E/P/T
DBR

Landscape Architect
KDC Associates

FIRE STATION #11

CITY OF MIDLAND
6600 BRIARWOOD AVE
MIDLAND, TX 79707

PROJECT No: **MA 18017**
DATE: **16-JAN-2020**

ISSUE

100% DESIGN DEVELOPMENT 22-MAY-2019
75% CONSTRUCTION DOCUMENT 26-JUN-2019
100% ISSUE FOR PERMIT 30-JUL-2019
100% ISSUE FOR APPROVAL TO BID 16-JAN-2020

ARCHITECTURE
SITE PLAN - BASE BID

A101

PROPERTY DATA

OWNER:	CITY OF MIDLAND	PARKING SPACES PER CODE:	12
		PARKING SPACES PROVIDED:	33
PROPERTY INFORMATION:			
ADDRESS:	6600 BRIARWOOD AVENUE MIDLAND, TX 79707	NO. OF STORIES:	1
		BUILDING HEIGHT:	
LEGAL DESCRIPTION:	LOT 1, BLOCK 1, LLANO COUNTRY	FIRE STATION:	28'
		WASH BAY:	23'
ACREAGE:	5.00 ACRES		

FIRE STATION
BUILDING AREA: 12,289 GSF.
LEVEL 1: 12,289 GSF
MEZZANINE: 961 GSF
BUILDING PERIMETER: 591'

WASH BAY
BUILDING AREA: 1,527 GSF.
BUILDING PERIMETER: 199'

SITE PLAN LEGEND

PROPERTY BOUNDARIES
EASEMENT
PROPOSED FENCE LINE

GENERAL NOTES

1. PAINT/MARK FIRE LANE AS REQUIRED (RE: PLAN AND NOTES ON SHEET G003 FOR EXTENT AND REQUIREMENTS OF MARKINGS).
2. INSTALL 6" CONCRETE CURBS AT ALL DRIVES, PARKING, ETC. AT VEHICULAR TRAFFIC AREAS, TYP. (RE: 9/A103)
3. DIMENSIONS TO BACK OF CURB. RE: CIVIL FOR ADDITIONAL SITE WORK DIMENSIONS.
4. 2% MAX. CROSS SLOPE @ ALL CROSSWALKS, ACCESSIBLE ROUTES OF TRAVEL AROUND SITE & AT ALL PASSENGER LOADING/UNLOADING AREAS
5. G.C. TO SUBMIT SIDEWALK JT. LAYOUT FOR ARCHITECT'S APPROVAL. EXPANSION JTS. @ 20'-0" O.C. MAX. SIDEWALKS 4-1/2" CONC. ON 2" SANDBED W/ 6X6 #6 WWF. (RE: CIVIL)
6. CONTRACTOR TO PRELIMINARILY LAY-OUT BUILDING. ONCE LAID OUT, REVIEW WITH ARCHITECT BEFORE PROCEEDING. COORD. ALL DIMENSIONS & REVIEW ANY DISCREPANCIES BEFORE STARTING WORK
7. MAX. DROP AT ALL EXTERIOR DOORS INCLUDING THRESHOLD SHALL BE BETWEEN 1/4" TO 1/2" MAX. (TYP)
8. PAINT ALL OUTDOOR CONDENSER WATER PIPING/VALVES
9. G.C. TO COORDINATE & ENSURE ALL REQ'D. UTILITIES ARE PROVIDED & FUNCTIONING PRIOR TO CONNECTION. G.C. SHALL BE SOLELY RESPONSIBLE FOR FILING ALL DOCUMENTS & NOTIFICATION OF ALL AGENCIES NECESSARY FOR CONNECTION AND/OR INSTALLATION OF SAID SERVICES
10. CONTRACTOR SHALL USE LINE LOCATOR SERVICE BEFORE BEGINNING TRENCHING OR DIGGING WHEN U.G. UTILITIES ARE SUSPECTED. CONTRACTOR SHALL REPAIR ALL UTILITIES DAMAGED
11. RE: SOIL REPORT FOR ALL FILL REQUIREMENTS
12. RE: CIVIL FOR EROSION CONTROL
13. RE: LANDSCAPING / IRRIGATION DRAWINGS FOR LANDSCAPE REQUIREMENTS.
14. G.C. TO COORDINATE OFFSITE UTILITIES INCLUDING:
    - 14.1 DOMESTIC WATER LINE - RE: CIVIL AND PLUMBING
    - 14.2 FIRE WATER LINE - RE:CIVIL AND PLUMBING
    - 14.3 SANITARY SEWER - RE: CIVIL AND PLUMBING
    - 14.4 ELECTRICAL - RE: ELECTRICAL
    - 14.5 NATURAL GAS - RE: PLUMBING
15. G.C. SHALL BE RESPONSIBLE TO COORDINATE CLEARING PLAN APPROVAL WITH OWNER AND ARCHITECT PRIOR TO CONSTRUCTION
16. COORDINATE WITH OWNER AND ARCHITECT FOR TREES TO REMAIN/ AREA TO REMAIN UNDISTURBED PRIOR TO CONSTRUCTION

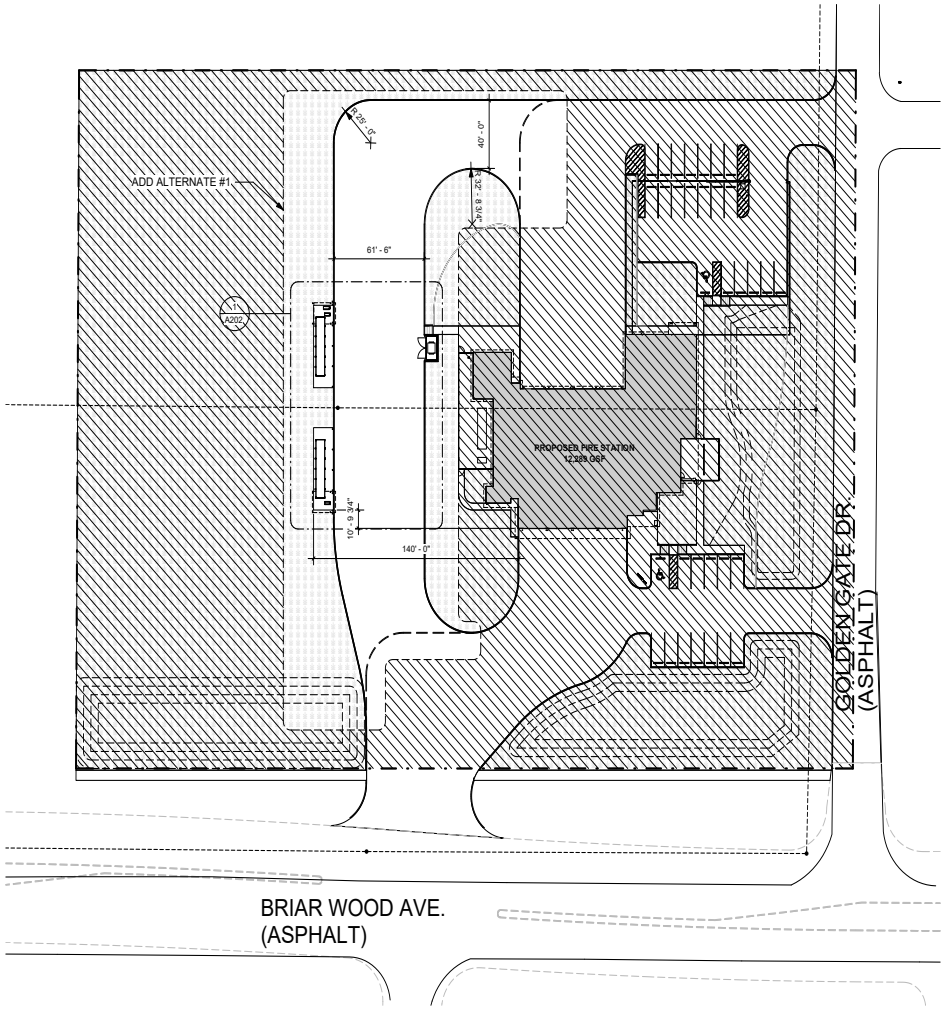

1 SITE PLAN - ALTERNATE 1
SCALE: 1" = 40'-0"

TRUE NORTH N
PROJECT NORTH N

4.1371

PROFESSIONAL SEAL

REGISTERED ARCHITECT JUSTIN E. MARTINEZ 24640 STATE OF TEXAS

LOGO/CONTACT

martinez ARCHITECTS

Martinez Architect, LP
900 Rockmead, Suite 250
Houston, Texas 77339
281.346.7371

DESIGN TEAM

Architectural
Martinez Architects

Civil Engineer
Maverick Engineering

Structural
Matrix Structural engineers

M/E/P/T
DBR

Landscape Architect
KDC Associates

FIRE STATION #11

CITY OF MIDLAND
6600 BRIARWOOD AVE
MIDLAND, TX 79707

PROJECT No: **MA 18017**
DATE: **16-JAN-2020**

ISSUE

100% DESIGN DEVELOPMENT 22-MAY-2019
75% CONSTRUCTION DOCUMENT 26-JUN-2019
100% ISSUE FOR PERMIT 30-JUL-2019
100% ISSUE FOR APPROVAL TO BID 16-JAN-2020

ARCHITECTURE SITE PLAN - ALTERNATE #1

A101.1

PROPERTY DATA

OWNER:	CITY OF MIDLAND	PARKING SPACES PER CODE:	12
		PARKING SPACES PROVIDED:	33
PROPERTY INFORMATION:			
ADDRESS:	6600 BRIARWOOD AVENUE MIDLAND, TX 79707	NO. OF STORIES:	1
		BUILDING HEIGHT:	
LEGAL DESCRIPTION:	LOT 1, BLOCK 1, LLANO COUNTRY	FIRE STATION:	28'
		WASH BAY:	23'
ACREAGE:	5.00 ACRES		

FIRE STATION
BUILDING AREA: 12,289 GSF.
LEVEL 1: 12,289 GSF
MEZZANINE: 961 GSF
BUILDING PERIMETER: 591'

WASH BAY
BUILDING AREA: 1,527 GSF.
BUILDING PERIMETER: 199'

SITE PLAN LEGEND

PROPERTY BOUNDARIES

EASEMENT

PROPOSED FENCE LINE

GENERAL NOTES

1. PAINT/MARK FIRE LANE AS REQUIRED (RE: PLAN AND NOTES ON SHEET G003 FOR EXTENT AND REQUIREMENTS OF MARKINGS).
2. INSTALL 6" CONCRETE CURBS AT ALL DRIVES, PARKING, ETC. AT VEHICULAR TRAFFIC AREAS, TYP. (RE: 9/A103)
3. DIMENSIONS TO BACK OF CURB. RE: CIVIL FOR ADDITIONAL SITE WORK DIMENSIONS.
4. 2% MAX. CROSS SLOPE @ ALL CROSSWALKS, ACCESSIBLE ROUTES OF TRAVEL AROUND SITE & AT ALL PASSENGER LOADING/UNLOADING AREAS
5. G.C. TO SUBMIT SIDEWALK J.T. LAYOUT FOR ARCHITECT'S APPROVAL. EXPANSION JTS. @ 20'-0" O.C. MAX. SIDEWALKS 4-1/2" CONC. ON 2" SANDBED W/ 6X6 #6 WWF. (RE: CIVIL)
6. CONTRACTOR TO PRELIMINARILY LAY-OUT BUILDING. ONCE LAID OUT, REVIEW WITH ARCHITECT BEFORE PROCEEDING. COORD. ALL DIMENSIONS & REVIEW ANY DISCREPANCIES BEFORE STARTING WORK
7. MAX. DROP AT ALL EXTERIOR DOORS INCLUDING THRESHOLD SHALL BE BETWEEN 1/4" TO 1/2" MAX. (TYP)
8. PAINT ALL OUTDOOR CONDENSER WATER PIPING/VALVES
9. G.C. TO COORDINATE & ENSURE ALL REQ'D. UTILITIES ARE PROVIDED & FUNCTIONING PRIOR TO CONNECTION. G.C. SHALL BE SOLELY RESPONSIBLE FOR FILING ALL DOCUMENTS & NOTIFICATION OF ALL AGENCIES NECESSARY FOR CONNECTION AND/OR INSTALLATION OF SAID SERVICES
10. CONTRACTOR SHALL USE LINE LOCATOR SERVICE BEFORE BEGINNING TRENCHING OR DIGGING WHEN U.G. UTILITIES ARE SUSPECTED. CONTRACTOR SHALL REPAIR ALL UTILITIES DAMAGED
11. RE: SOIL REPORT FOR ALL FILL REQUIREMENTS
12. RE: CIVIL FOR EROSION CONTROL
13. RE: LANDSCAPING / IRRIGATION DRAWINGS FOR LANDSCAPE REQUIREMENTS.
14. G.C. TO COORDINATE OFFSITE UTILITIES INCLUDING:
    - 14.1 DOMESTIC WATER LINE - RE: CIVIL AND PLUMBING
    - 14.2 FIRE WATER LINE - RE:CIVIL AND PLUMBING
    - 14.3 SANITARY SEWER - RE: CIVIL AND PLUMBING
    - 14.4 ELECTRICAL - RE: ELECTRICAL
    - 14.5 NATURAL GAS - RE: PLUMBING
15. G.C. SHALL BE RESPONSIBLE TO COORDINATE CLEARING PLAN APPROVAL WITH OWNER AND ARCHITECT PRIOR TO CONSTRUCTION
16. COORDINATE WITH OWNER AND ARCHITECT FOR TREES TO REMAIN/ AREA TO REMAIN UNDISTURBED PRIOR TO CONSTRUCTION

NOTE

1. TRASH ENCLOSURE IS INCUDED IN BASE BID BUT IS RELOCATED IN ADD ALTERNATE #2

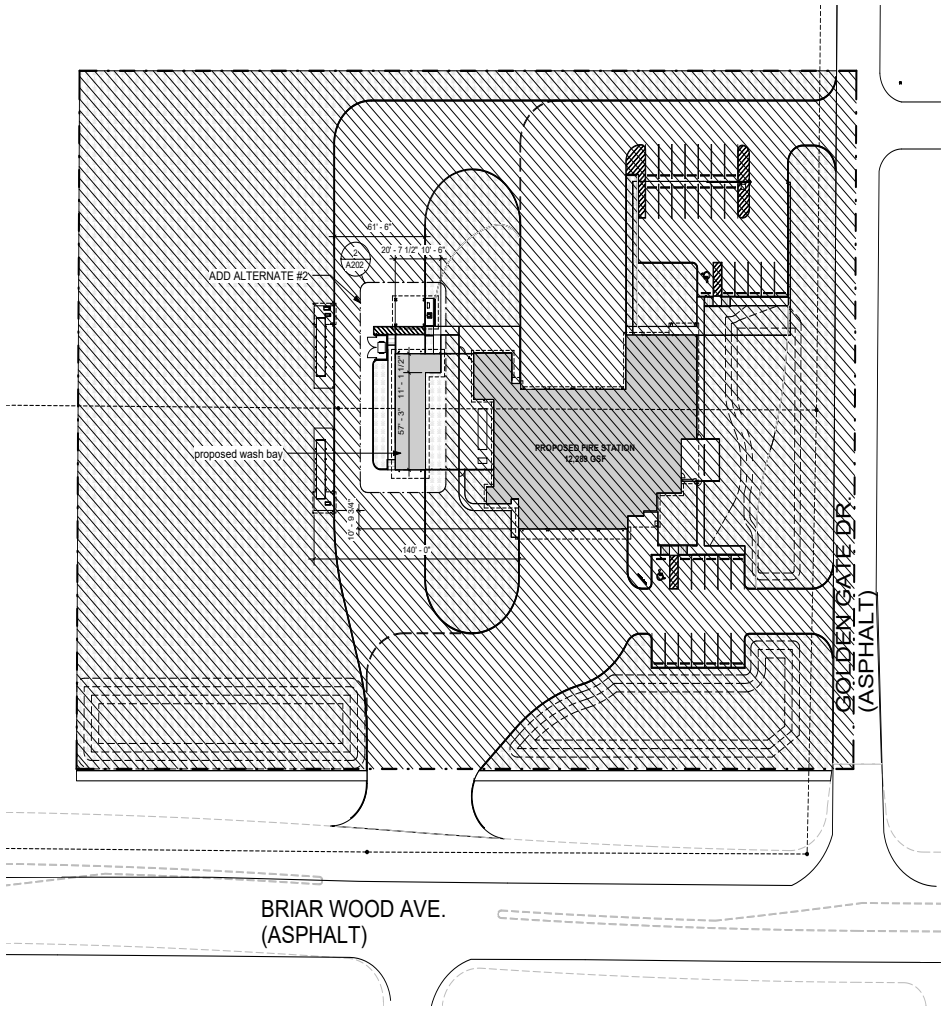

1 SITE PLAN - ALTERNATE 2
SCALE: 1" = 40'-0"

TRUE NORTH N

PROJECT NORTH N

PROFESSIONAL SEAL

REGISTERED ARCHITECT JUSTIN E. MYERS 24640 STATE OF TEXAS

LOGO/CONTACT

martinez ARCHITECTS

Martinez Architect, LP
900 Rockmead, Suite 250
Houston, Texas 77339
281.346.7371

DESIGN TEAM

Architectural
Martinez Architects

Civil Engineer
Maverick Engineering

Structural
Matrix Structural engineers

M/E/P/T
DBR

Landscape Architect
KDC Associates

FIRE STATION #11

CITY OF MIDLAND
6600 BRIARWOOD AVE
MIDLAND, TX 79707

PROJECT No: **MA 18017**
DATE: **16-JAN-2020**

ISSUE

100% DESIGN DEVELOPMENT 22-MAY-2019
75% CONSTRUCTION DOCUMENT 26-JUN-2019
100% ISSUE FOR PERMIT 30-JUL-2019
100% ISSUE FOR APPROVAL TO BID 16-JAN-2020

ARCHITECTURE
SITE PLAN - ALTERNATE #2

A101.2

4.1372

NOTES:
1. PROVIDE BRACING AND SUPPORT AS NECESSARY TO MAINTAIN HORIZONTAL ALIGNMENT THROUGH POURING OPERATIONS

2. SUBMIT PROPOSED JT. LAYOUT FOR ARCHITECT'S APPROVAL.

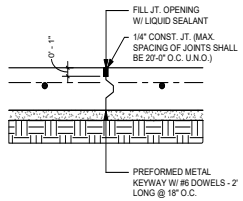

12 CONSTRUCTION JOINT
SCALE: 1 1/2" = 1'-0"

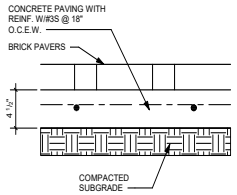

8 BRICK PAVERS
SCALE: N.T.S.

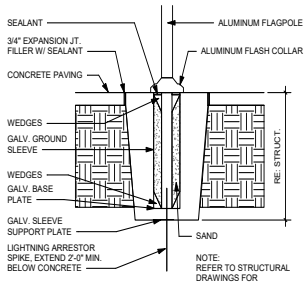

4 FLAG POLE
SCALE: N.T.S.

NOTES:
1. RE: CIVIL PAVING NOTES
2. PERFORM SAWCUTS WITHIN 8 TO 12 HOURS OF PLACING CONC.

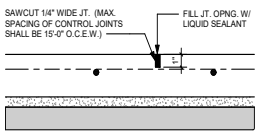

11 CONTROL JOINT
SCALE: 1 1/2" = 1'-0"

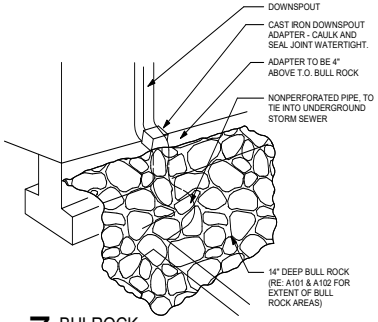

7 BULROCK
SCALE: N/A

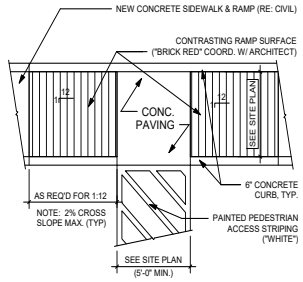

3 HANDICAP RAMP
SCALE: N.T.S.

NOTES:
1. RE: CIVIL DETAILS FOR ADDITOINAL INFORMATION

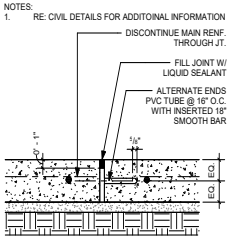

10 EXPANSION JOINT
SCALE: 1 1/2" = 1'-0"

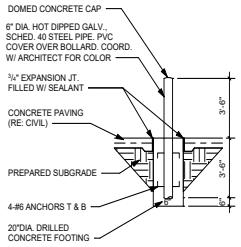

6 PIPE BOLLARD
SCALE: N.T.S.

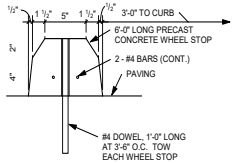

2 WHEEL STOP
SCALE: N.T.S.

NOTES:
1. CONC. CURB TO HAVE MEDIUM BRUSH MORTAR FINISH EXCEPT WHEN POURED BY MACHINE. (RE: PLAN FOR CURB LOCATIONS)
2. CONC. SHALL BE TYP. 5" (RE: PLAN FOR LOCATION)

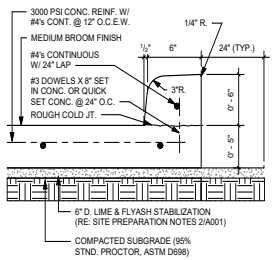

13 CURB DETAIL
SCALE: 1 1/2" = 1'-0"

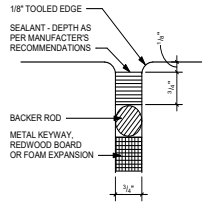

9 PAVING JOINT
SCALE: 1 1/2" = 1'-0"

NOTE:

PROVIDE 1" DEEP x1/4" WIDE TOOLED JTS. REFER TO CIVIL FOR ADDITIONAL INFORMATION

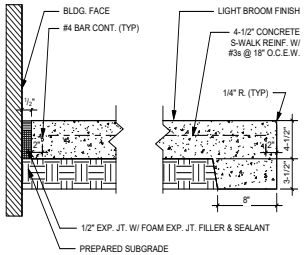

5 TYPICAL SIDEWALK
SCALE: N.T.S.

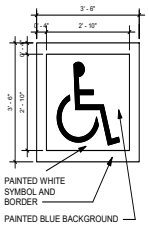

NOTE: SYMBOL SHALL BE CENTERED ON WIDTH OF PARKING SPACE AND AT DRIVE EDGE OF SPACE.

1 H.C. MARKING
SCALE: N.T.S.

PROFESSIONAL SEAL

REGISTERED ARCHITECT JUSTIN E. MYERS 24640 STATE OF TEXAS

LOGO/CONTACT

martinez ARCHITECTS

Martinez Architect, LP
900 Rockmead, Suite 250
Houston, Texas 77339
281.346.7371

DESIGN TEAM

Architectural
Martinez Architects

Civil Engineer
Maverick Engineering

Structural
Matrix Structural engineers

M/E/P/T
DBR

Landscape Architect
KDC Associates

FIRE STATION #11

CITY OF MIDLAND
6600 BRIARWOOD AVE
MIDLAND, TX 79707

PROJECT No: **MA 18017**
DATE: **16-JAN-2020**

ISSUE

100% DESIGN DEVELOPMENT 22-MAY-2019
75% CONSTRUCTION DOCUMENT 26-JUN-2019
100% ISSUE FOR PERMIT 30-JUL-2019
100% ISSUE FOR APPROVAL TO BID 16-JAN-2020

SITE DETAILS

A102

4.1373

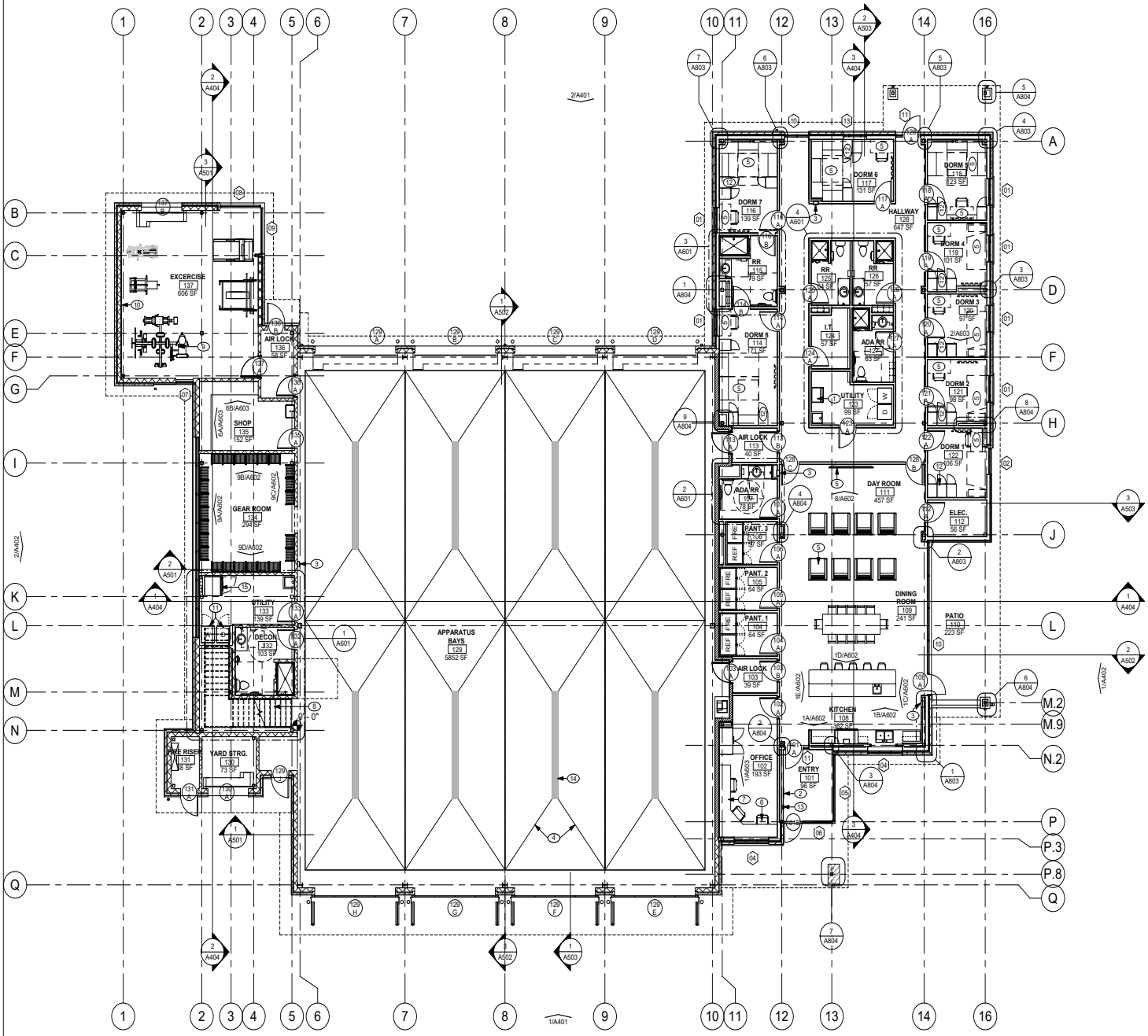

01 LEVEL 1
SCALE: 1/8" = 1'-0"

TRUE NORTH
PROJECT NORTH

GENERAL NOTES

A. SEE SHEET A204 FOR PARTITION TYPES.
B. BRACE ALL STUD WALLS BACK TO STRUCTURE AS REQ'D. STUD MANUFACTURER SHALL GAUGE ALL STUDS PER APPLICATION. SUBMIT ENGINEERED SHOP DRAWINGS FOR APPROVAL.
C. EXTEND & SEAL ALL FIRE RATED WALLS TO DECK. ENSURE AIR-TIGHT SEAL @ ALL EXTERIOR WALLS.
D. COMPLETELY FILL ALL EXTERIOR WALLS WITH INSULATION.
E. CONTRACTOR TO PROVIDE & INSTALL FIRE DEPARTMENT ACCESS BOX. COORDINATE BOX REQUIREMENTS AND MOUNTING LOCATION WITH FIRE MARSHAL PRIOR TO INSTALLATION. APPLICATION & APPROVAL REQ'D.
F. PROVIDE GROMMETS AT ALL CASEWORK KNEE SPACES.
G. ALL MATERIALS TESTING BY ALLOWANCE.
H. TESTING AND BALANCING OF MECHANICAL SYSTEMS SHALL BE PART OF BASE BID.
I. ALL BASE CABINET FILE DRAWERS TO BE CONSTRUCTED WITH PROPER WIDTH/DEPTH SO AS TO HOUSE FILING SYSTEM WITH SIDE RAILS TO ACCEPT HANGING FILE SYSTEM. SUBMIT DRAWER MOCKUP FOR ARCHITECT'S REVIEW AND APPROVAL PRIOR TO CONSTRUCTION/ INSTALLATION.
J. SUBSTITUTE DUROCK CEMENT BOARD FOR GYPSUM BOARD @ ALL CERAMIC WALL TILE LOCATIONS.
K. 60" H. PLASTIC CORNER GUARDS TO BE PROVIDED AT ALL GYP. BD. CORNERS EXCEPT THOSE AT COLUMN FURROUTS.
L. CONTRACTOR SHALL COORDINATE THE LOCATION OF ALL ELECTRICAL DEVICES & PLUMBING WITH MILLWORK, LOCKERS, ETC. ALL ELECTRICAL DEVICES & PLUMBING NOT COORDINATED WITH MILLWORK, LOCKERS, ETC. SHALL BE RELOCATED BY THE CONTRACTOR.
M. REFER TO SHEET G001 FOR TYPICAL CLEARANCES AT DOORS. ALL DOORS SHALL MEET THE REQUIREMENTS OF THIS DRAWING. IF A DOOR IS FOUND THAT DOES NOT MEET THESE REQUIREMENTS, CONTACT THE ARCHITECT PRIOR TO CONSTRUCTION.
N. PROVIDE WOOD BLOCKING IN WALLS AS REQUIRED AT ALL HANDRAILS, MILLWORK, EQUIPMENT, ETC. - VERIFY LOCATION OF ALL OWNER PROVIDED EQUIPMENT THAT WILL REQUIRE BLOCKING.
O. SLOPE AT FLOOR DRAINS SHALL NOT EXCEED 1:48 SLOPE IN AREAS OF ACCESSIBLE PATH OF TRAVEL.

WALL LEGEND

1-HR FIRE RATED WALL TO DECK - SEALED: RE TO G002

FLOOR PLAN KEYED NOTES

1 ICE MACHINE BY OWNER G.C. TO INSTALL
2 DEDICATION PLAQUE - RE 6/A905
3 FIRE EXTINGUISHER IN CABINET AT DRYWALL LOCATIONS, AND SURFACE MOUNTED AT CMU LOCATIONS
4 SLOPED CONC. FLOOR RE: STRUCT
5 FURNISHINGS (O.F.C.I.)
6 CHAIR
7 BUILT-IN-DESK
8 METAL STAIR
9 EXERCISE EQUIPMENT (O.F.C.I.)
10 4' HIGH X FULL LENGTH WALL MIRROR @ 30" A.F.F.
11 COMMERCIAL WASHER/ DRYER BY OWNER G.C. INSTALL
12 1-TIER P-LAM STORAGE LOCKERS
13 CALLBOX
14 TRENCH DRAIN (RE: PLUMBING)
15 65 LB UNIMAC EXTRACTOR

PROFESSIONAL SEAL

REGISTERED ARCHITECT JUSTIN E. MYERS 24640 STATE OF TEXAS

LOGO/CONTACT

martinez ARCHITECTS

Martinez Architect, LP
900 Rockmead, Suite 250
Houston, Texas 77339
281.346.7371

DESIGN TEAM

Architectural
Martinez Architects

Civil Engineer
Maverick Engineering

Structural
Matrix Structural engineers

M/E/P/T
DBR

Landscape Architect
KDC Associates

FIRE STATION #11

CITY OF MIDLAND
6600 BRIARWOOD AVE
MIDLAND, TX 79707

PROJECT No: **MA 18017**
DATE: **16-JAN-2020**

ISSUE
100% DESIGN DEVELOPMENT 22-MAY-2019
75% CONSTRUCTION DOCUMENT 26-JUN-2019
100% ISSUE FOR PERMIT 30-JUL-2019
100% ISSUE FOR APPROVAL TO BID 16-JAN-2020

LEVEL 1 - FIRE STATION

A201

4.1374

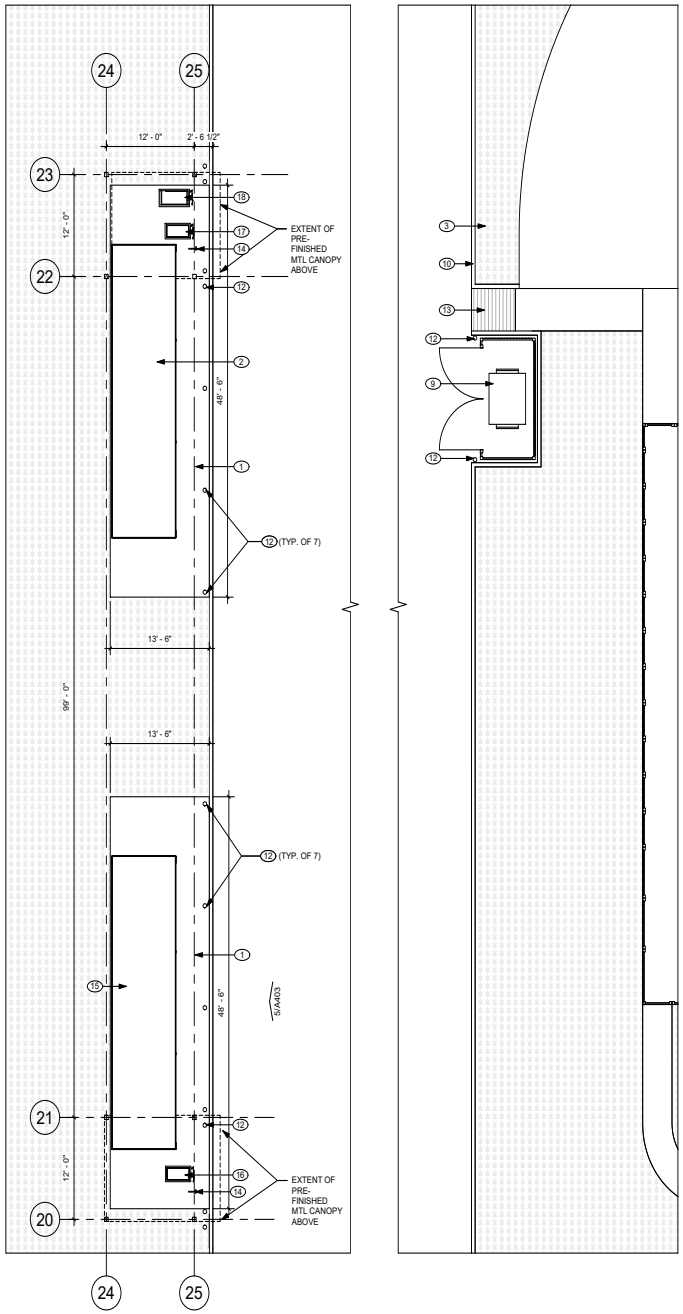

1 SITE, DIMENSIONED & FINISH PLAN - ADD ALTERNATE #1
SCALE: 1/8" = 1'-0"

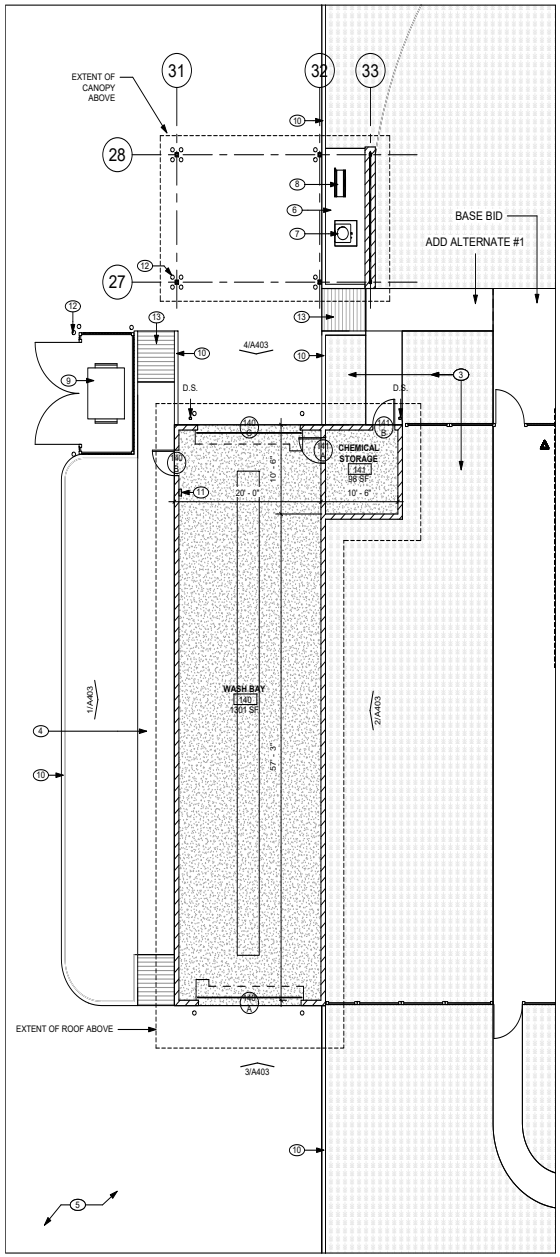

2 SITE, DIMENSIONED & FINISH PLAN - ADD ALTERNATE #2
SCALE: 1/8" = 1'-0"

GENERAL NOTES

A. SEE SHEET A204 FOR PARTITION TYPES.
B. BRACE ALL STUD WALLS BACK TO STRUCTURE AS REQ'D. STUD MANUFACTURER SHALL GAUGE ALL STUDS PER APPLICATION. SUBMIT ENGINEERED SHOP DRAWINGS FOR APPROVAL.
C. EXTEND & SEAL ALL FIRE RATED WALLS TO DECK. ENSURE AIR-TIGHT SEAL @ ALL EXTERIOR WALLS.
D. COMPLETELY FILL ALL EXTERIOR WALLS WITH INSULATION.
E. CONTRACTOR TO PROVIDE & INSTALL FIRE DEPARTMENT ACCESS BOX. COORDINATE BOX REQUIREMENTS AND MOUNTING LOCATION WITH FIRE MARSHAL PRIOR TO INSTALLATION. APPLICATION & APPROVAL REQ'D.
F. PROVIDE GROMMETS AT ALL CASEWORK KNEE SPACES.
G. ALL MATERIALS TESTING BY ALLOWANCE.
H. TESTING AND BALANCING OF MECHANICAL SYSTEMS SHALL BE PART OF BASE BID.
I. ALL BASE CABINET FILE DRAWERS TO BE CONSTRUCTED WITH PROPER WIDTH/DEPTH SO AS TO HOUSE FILING SYSTEM WITH SIDE RAILS TO ACCEPT HANGING FILE SYSTEM. SUBMIT DRAWER MOCKUP FOR ARCHITECT'S REVIEW AND APPROVAL PRIOR TO CONSTRUCTION/ INSTALLATION.
J. SUBSTITUTE DUROCK CEMENT BOARD FOR GYPSUM BOARD @ ALL CERAMIC WALL TILE LOCATIONS.
K. 60° H. PLASTIC CORNER GUARDS TO BE PROVIDED AT ALL GYP. BD. CORNERS EXCEPT THOSE AT COLUMN FURROUTS.
L. CONTRACTOR SHALL COORDINATE THE LOCATION OF ALL ELECTRICAL DEVICES & PLUMBING WITH MILLWORK, LOCKERS, ETC. ALL ELECTRICAL DEVICES & PLUMBING NOT COORDINATED WITH MILLWORK, LOCKERS, ETC. SHALL BE RELOCATED BY THE CONTRACTOR.
M. REFER TO SHEET G001 FOR TYPICAL CLEARANCES AT DOORS. ALL DOORS SHALL MEET THE REQUIREMENTS OF THIS DRAWING. IF A DOOR IS FOUND THAT DOES NOT MEET THESE REQUIREMENTS, CONTACT THE ARCHITECT PRIOR TO CONSTRUCTION.
N. PROVIDE WOOD BLOCKING IN WALLS AS REQUIRED AT ALL HANDRAILS, MILLWORK, EQUIPMENT, ETC. - VERIFY LOCATION OF ALL OWNER PROVIDED EQUIPMENT THAT WILL REQUIRE BLOCKING.
O. SLOPE AT FLOOR DRAINS SHALL NOT EXCEED 1:48 SLOPE IN AREAS OF ACCESSIBLE PATH OF TRAVEL.

NOTES:
A. TILE FLOOR FINISHES TO BE INSTALLED TO ROOM EXTENT (UNDER MILLWORK)

FLOOR PLAN KEYED NOTES

1 CONCRETE PAVEMENT
2 20,000 GALLON ABOVE-GROUND DIESEL TANK
3 LANDSCAPE / IRRIGATION AREA - RE: LANDSCAPE DWGS.
4 CONCRETE SIDEWALK - RE: 5/A102 & CIVIL DRAWINGS
5 CONCRETE PAVING (RE: CIVIL DRAWINGS). RE: JOINT DETAILS 9 THRU 12 ON SHEET A102
6 CONCRETE PAD FOR WASH BAY EQUIPMENT
7 COMMERCIAL VACUUM
8 TIRE PRESSURE
9 TRASH RECEPTACLES BY OWNER
10 CONCRETE CURBE. RE: 13/A102
11 FIRE EXTINGUISHER IN CABINET AT DRYWALL LOCATIONS, AND SURFACE MOUNTED AT CMU LOCATIONS
12 CONCRETE-FILLED STEEL PIPE BOLLARDS - RE: 6/A102
13 HANDICAP-ACCESSIBLE CURB RAMP - RE: 3/A102
14 ACCESS CONTROL PEDESTAL
15 20,000 GALLON ABOVE-GROUND GASONLINE TANK
16 GASOLINE DISPENSER
17 DIESEL DISPENSER
18 DEF DISPENSER

FLOOR FINISH LEGEND

LVT-01
RUBBER ATHLETIC FLOORING
PORCELAIN TILE - 1
PORCELAIN TILE (FT-2)
SEALED CONCRETE (SC-1)
ABRASION & SLIP RESISTANT CONCRETE

PROFESSIONAL SEAL
REGISTERED ARCHITECT JUSTIN E. MYERS 24640 STATE OF TEXAS

LOGO/CONTACT

martinez ARCHITECTS
Martinez Architect, LP
900 Rockmead, Suite 250
Houston, Texas 77339
281.346.7371

DESIGN TEAM

Architectural
Martinez Architects
Civil Engineer
Maverick Engineering
Structural
Matrix Structural engineers
M/E/P/T
DBR
Landscape Architect
KDC Associates

FIRE STATION #11
CITY OF MIDLAND
6600 BRIARWOOD AVE
MIDLAND, TX 79707

PROJECT No: **MA 18017**
DATE: **16-JAN-2020**

ISSUE
100% DESIGN DEVELOPMENT 22-MAY-2019
75% CONSTRUCTION DOCUMENT 26-JUN-2019
100% ISSUE FOR PERMIT 30-JUL-2019
100% ISSUE FOR APPROVAL TO BID 16-JAN-2020

LEVEL 1 - ADD ALTERNATES #1&2

A202

4.1375

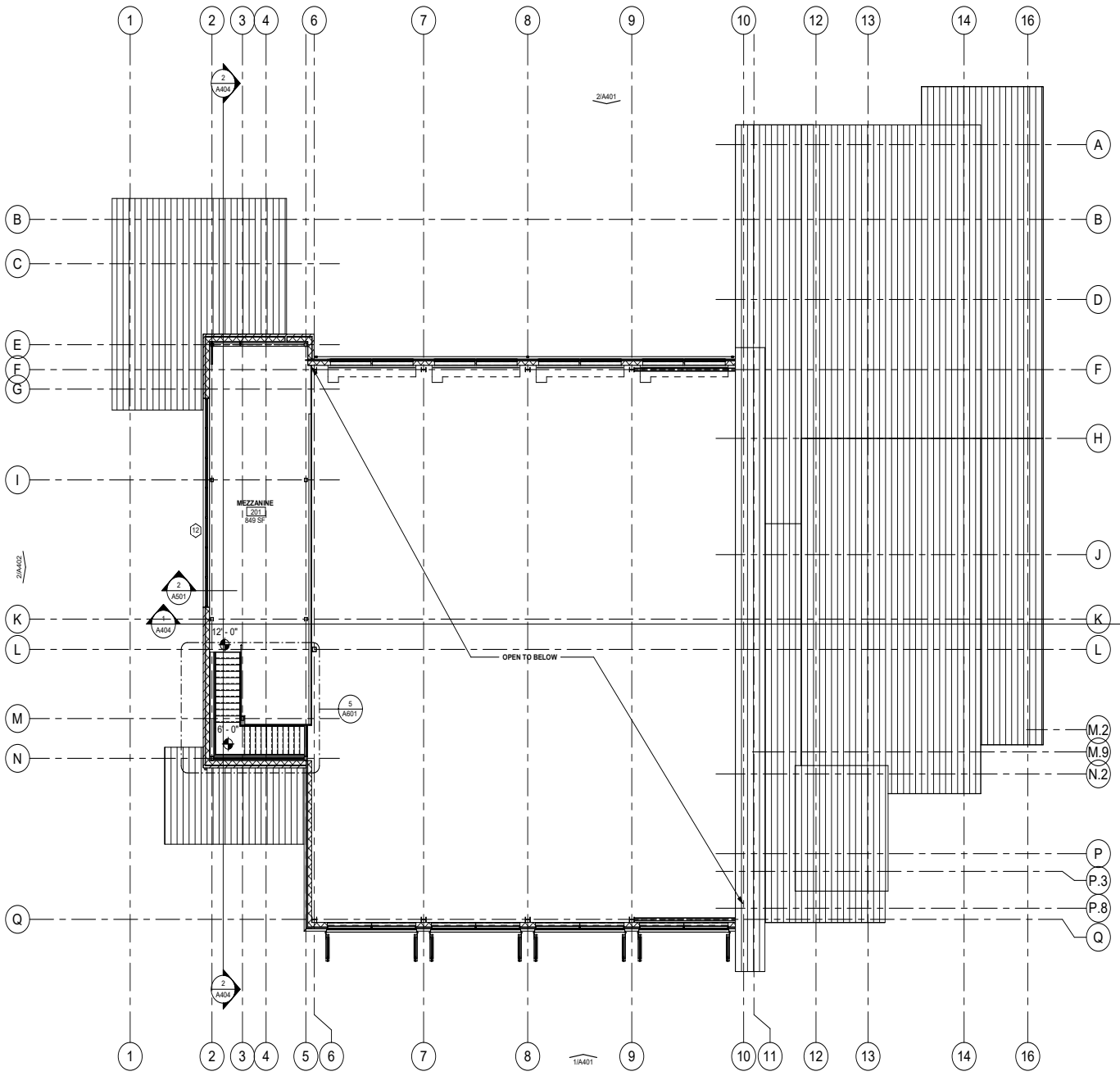

1 MEZZANINE
SCALE: 1/8" = 1'-0"

TRUE NORTH
PROJECT NORTH
N

GENERAL NOTES

A. SEE SHEET A204 FOR PARTITION TYPES.
B. BRACE ALL STUD WALLS BACK TO STRUCTURE AS REQ'D. STUD MANUFACTURER SHALL GAUGE ALL STUDS PER APPLICATION. SUBMIT ENGINEERED SHOP DRAWINGS FOR APPROVAL.
C. EXTEND & SEAL ALL FIRE RATED WALLS TO DECK. ENSURE AIR-TIGHT SEAL @ ALL EXTERIOR WALLS.
D. COMPLETELY FILL ALL EXTERIOR WALLS WITH INSULATION.
E. CONTRACTOR TO PROVIDE & INSTALL FIRE DEPARTMENT ACCESS BOX. COORDINATE BOX REQUIREMENTS AND MOUNTING LOCATION WITH FIRE MARSHAL PRIOR TO INSTALLATION. APPLICATION & APPROVAL REQ'D.
F. PROVIDE GROMMETS AT ALL CASEWORK KNEE SPACES.
G. ALL MATERIALS TESTING BY ALLOWANCE.
H. TESTING AND BALANCING OF MECHANICAL SYSTEMS SHALL BE PART OF BASE BID.
I. ALL BASE CABINET FILE DRAWERS TO BE CONSTRUCTED WITH PROPER WIDTH/DEPTH SO AS TO HOUSE FILING SYSTEM WITH SIDE RAILS TO ACCEPT HANGING FILE SYSTEM. SUBMIT DRAWER MOCKUP FOR ARCHITECT'S REVIEW AND APPROVAL PRIOR TO CONSTRUCTION/ INSTALLATION.
J. SUBSTITUTE DUROCK CEMENT BOARD FOR GYPSUM BOARD @ ALL CERAMIC WALL TILE LOCATIONS.
K. 60" H. PLASTIC CORNER GUARDS TO BE PROVIDED AT ALL GYP. BD. CORNERS EXCEPT THOSE AT COLUMN FURROUTS.
L. CONTRACTOR SHALL COORDINATE THE LOCATION OF ALL ELECTRICAL DEVICES & PLUMBING WITH MILLWORK, LOCKERS, ETC. ALL ELECTRICAL DEVICES & PLUMBING NOT COORDINATED WITH MILLWORK, LOCKERS, ETC. SHALL BE RELOCATED BY THE CONTRACTOR.
M. REFER TO SHEET G001 FOR TYPICAL CLEARANCES AT DOORS. ALL DOORS SHALL MEET THE REQUIREMENTS OF THIS DRAWING. IF A DOOR IS FOUND THAT DOES NOT MEET THESE REQUIREMENTS, CONTACT THE ARCHITECT PRIOR TO CONSTRUCTION.
N. PROVIDE WOOD BLOCKING IN WALLS AS REQUIRED AT ALL HANDRAILS, MILLWORK, EQUIPMENT, ETC. - VERIFY LOCATION OF ALL OWNER PROVIDED EQUIPMENT THAT WILL REQUIRE BLOCKING.
O. SLOPE AT FLOOR DRAINS SHALL NOT EXCEED 1:48 SLOPE IN AREAS OF ACCESSIBLE PATH OF TRAVEL.

WALL LEGEND

1-HR FIRE RATED WALL TO DECK - SEALED: RE TO G002

KEYED NOTES

1. DEDICATION PLAQUE - RE 6/A905
2. FIRE EXTINGUISHER IN CABINET AT DRYWALL LOCATIONS, AND SURFACE MOUNTED AT METAL LINER PANELS LOCATIONS
3. TRENCH DRAIN (RE: PLUMBING)
4. NOT USED
5. 1-TIER P-LAM STORAGE LOCKERS.
6. EXTRA LENGTH MURPHY BED (O.F.C.I.). CONTRACTOR TO VERIFY SIZE REQUIREMENTS OF BED w/ OWNER PRIOR TO INSTALLATION. CONTRACTOR SHALL ENSURE THAT BED INSTALLATION PROVIDES FLUSH TRANSITION BETWEEN BED AND ADJACENT WALL WHEN BED IS IN FOLDED POSITION.
7. FURNISHINGS (O.F.C.I.)
8. EXERCISE EQUIPMENT (O.F.C.I.)
9. SOLENOID GAS SHUT-OFF VALVE - RE: PLUMBING
10. PROVIDE BLOCKING FOR OWNER-FURNISHED T.V. (COORD. MOUNTING HGT. WITH ARCHITECT PRIOR TO INSTALLATION)
11. PROVIDE REVERSE OSMOSIS SUPPLY BENEATH SINK
12. 65 LB UNIMAC EXTRACTOR
13. CALLBOX
14. LINE OF ROOF ABOVE
15. ICE MACHINE BY OWNER G.C. TO INSTALL
16. METAL STAIR
17. SLOPED CONC. FLOOR RE: STRUCT
18. WALL MOUNTED GEAR GRID LOCKERS
19. VENDING MACHINES BY OWNER G.C. TO INSTALL
20. 4' HIGH X FULL LENGTH WALL MIRROR @ 30" A.F.F.
21. SHOWER / EYEWASH RE: PLUMB.
22. COMMERCIAL WASHER/ DRYER BY OWNER G.C. INSTALL
23. MIGHTY LINE 4"
24. NATURAL GAS BBQ PIT (O.F.C.I.) PROVIDE NATURAL GAS LINE HOOK-UP
25. VINYL STRIP CURTAIN - RE:SPEC

PROFESSIONAL SEAL

REGISTERED ARCHITECT JUSTIN E. MARTINEZ 24640 STATE OF TEXAS

LOGO/CONTACT

martinez ARCHITECTS

Martinez Architect, LP
900 Rockmead, Suite 250
Houston, Texas 77339
281.346.7371

DESIGN TEAM

Architectural
Martinez Architects

Civil Engineer
Maverick Engineering

Structural
Matrix Structural engineers

M/E/P/T
DBR

Landscape Architect
KDC Associates

FIRE STATION #11

CITY OF MIDLAND
6600 BRIARWOOD AVE
MIDLAND, TX 79707

PROJECT No: **MA 18017**
DATE: **16-JAN-2020**

ISSUE

100% DESIGN DEVELOPMENT 22-MAY-2019
75% CONSTRUCTION DOCUMENT 26-JUN-2019
100% ISSUE FOR PERMIT 30-JUL-2019
100% ISSUE FOR APPROVAL TO BID 16-JAN-2020

MEZZANINE PLAN

A203

4.1376

GENERAL NOTES

A. FURNITURE AND EQUIPMENT NOT SHOWN FOR CLARITY. RE: A201
B. DIMENSIONS ARE TO FACE STUDS..
C. COLUMN LINES ARE DIMENSIONED:
- TO CENTER LINE OF WEB WHEN ON AXIS WITH GRID LINE
- TO FACE OF FLANGE WHEN WEB IN PERPENDICULAR TO GRID LINE
- TO CENTER OF TUBE COLUMNS
- TO CENTER OF PIPE COLUMNS

D. PRE-ENGINEERED METAL BUILDING MANUFACTURER SHALL CONFORM TO DIMENSION AS SHOWN ON ARCHITECTURAL AND STRUCTURAL CONSTRUCTION DOCUMENTS

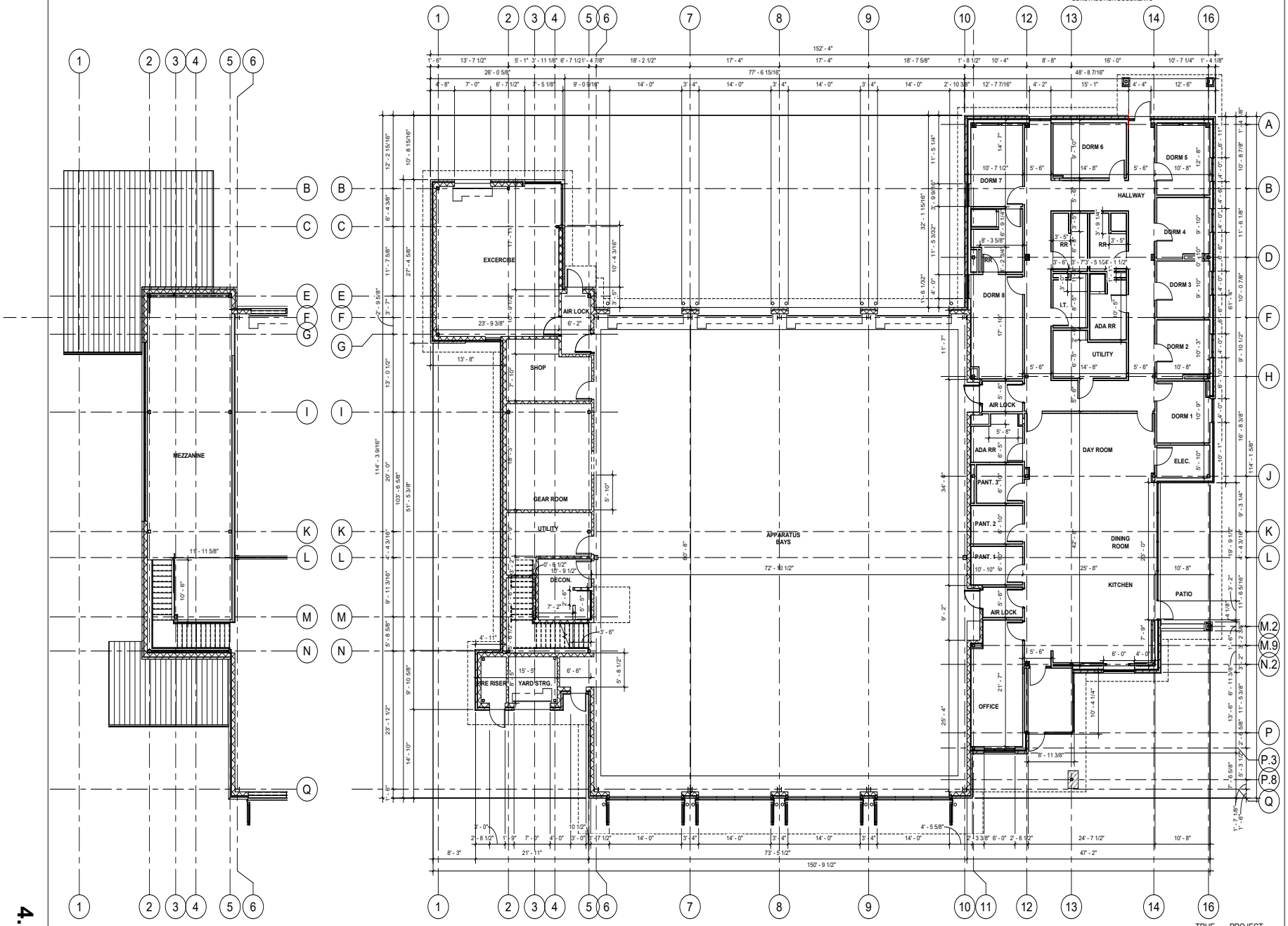

1 MEZZANINE - DIMENSIONED FLOOR PLAN
SCALE: 1/8" = 1'-0"

2 LEVEL 1 - DIMENSIONED FLOOR PLAN
SCALE: 1/8" = 1'-0"

TRUE NORTH

PROJECT NORTH

PROFESSIONAL SEAL

REGISTERED ARCHITECT
JUSTIN E. MYERS
24640
STATE OF TEXAS

LOGO/CONTACT

martinez ARCHITECTS

Martinez Architect, LP
900 Rockmead, Suite 250
Houston, Texas 77339
281.346.7371

DESIGN TEAM

Architectural
Martinez Architects

Civil Engineer
Maverick Engineering

Structural
Matrix Structural engineers

M/E/P/T
DBR

Landscape Architect
KDC Associates

FIRE STATION #11

CITY OF MIDLAND
6600 BRIARWOOD AVE
MIDLAND, TX 79707

PROJECT No: MA 18017
DATE: 16-JAN-2020

ISSUE

100% DESIGN DEVELOPMENT 22-MAY-2019
75% CONSTRUCTION DOCUMENT 26-JUN-2019
100% ISSUE FOR PERMIT 30-JUL-2019
100% ISSUE FOR APPROVAL TO BID 16-JAN-2020

DIMENSIONED FLOOR PLAN

A204

4.1377

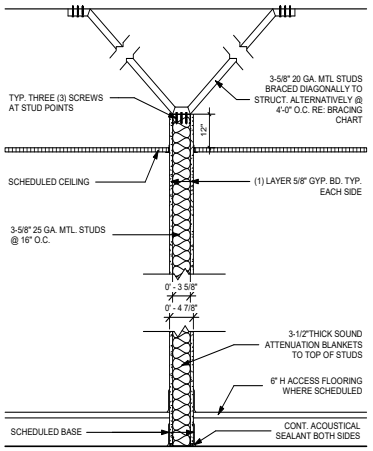

A

TYPE	FIRE RAT'G	DESCRIPTION
A	NONE	(AS SHOWN)
A1	NONE	NO SOUND INSULATION
A2	NONE	SAME AS 'A', w/ 2 1/2" STUDS AND GYP ON ONE SIDE ONLY
A3	NONE	SAME AS 'B', W/ GYP ON ONE SIDE ONLY

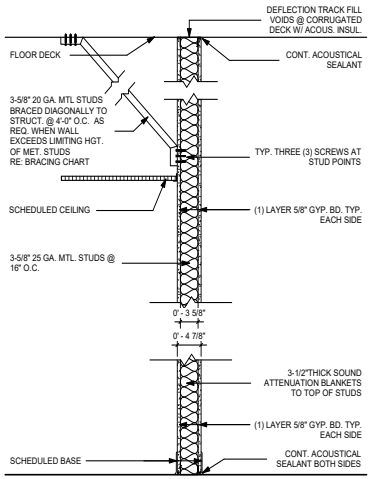

B

TYPE	FIRE RAT'G	DESCRIPTION
B	NONE	AS SHOWN
B.1	60 MIN.	SAME AS 'B', w/ 1 HOUR RATING
B.2	60 MIN.	SAME AS 'B1', w/ 6" STUDS
B.3	NONE	SAME AS 'B', w/ 2 1/2" STUDS AND GYP ON ONE SIDE ONLY
B.4	NONE	SAME AS 'B', w/ GYP ON ONE SIDE ONLY

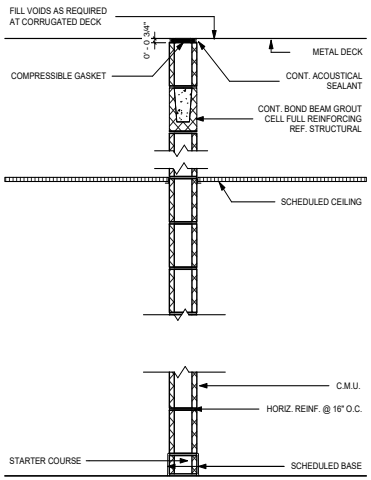

K

TYPE	FIRE RAT'G	DESCRIPTION	STC RAT'G
K	2-HR	8" CMU TO DECK (AS SHOWN)	
K1	2-HR	SAME AS "K" w/ 5/8" GYP. BD. OVER 7/8" FURRING CHANNELS ONE SIDE	
K2	NONE	6" CMU TO DECK	
K3	NONE	6" CMU w/ 5/8" GYP. BD. OVER 7/8" FURRING CHANNELS ONE SIDE	
K4	2-HR	SAME AS SHOWN	

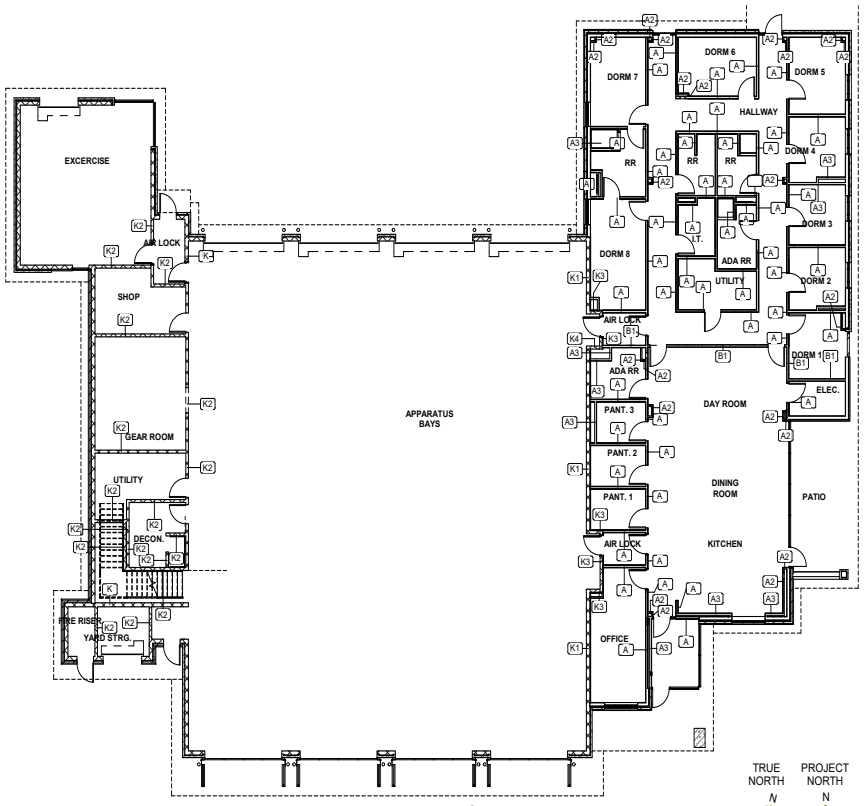

1 PARTITION TYPE PLAN
SCALE: 3/32" = 1'-0"

4.1378

PROFESSIONAL SEAL

REGISTERED ARCHITECT JUSTIN E. MARTINEZ 24640 STATE OF TEXAS

LOGO/CONTACT

martinez ARCHITECTS

Martinez Architect, LP
900 Rockmead, Suite 250
Houston, Texas 77339
281.346.7371

DESIGN TEAM

Architectural
Martinez Architects

Civil Engineer
Maverick Engineering

Structural
Matrix Structural engineers

MEP/FP/T
DBR

Landscape Architect
KDC Associates

FIRE STATION #11

CITY OF MIDLAND
6600 BRIARWOOD AVE
MIDLAND, TX 79707

PROJECT No: MA 18017
DATE: 16-JAN-2020

ISSUE

100% DESIGN DEVELOPMENT
22-MAY-2019

75% CONSTRUCTION DOCUMENT
26-JUN-2019

100% ISSUE FOR PERMIT
30-JUL-2019

100% ISSUE FOR APPROVAL TO BID
16-JAN-2020

PARTITION TYPES

A205

GENERAL NOTES

A. ROOFING MANUFACTURER TO SUBMIT DETAILED SHOP DRAWINGS SHOWING ALL ROOF EDGE AND CONNECTION DETAILS FOR ARCHITECT'S APPROVAL.
B. COLORS OF ALL EXTERIOR METAL TO BE SELECTED BY ARCHITECT FROM MANUFACTURER'S FULL RANGE.
C. RE: MEP DWGS. FOR ALL ROOF PENETRATIONS.
D. ROOFING MANUFACTURER / INSTALLER SHALL SUBMIT WEATHER-TIGHTNESS WARRANTY TO ARCHITECT FOR APPROVAL AS SPECIFIED.
E. ROOFING DETAILS INDICATE "SIKA SARNAFIL" PVC MEMBRANE ROOFING MATERIALS AS BASIS OF DESIGN. CONTRACTOR SHALL PROVIDE SPECIFIC ITEMS OR APPROVED EQUALS.
F. ALL DOWNSPOUTS SHALL TIE INTO UNDERGROUND STORM SEWER. PROVIDE CAST IRON BOOTS. RE: CIVIL.
G. APPROVED MANUFACTURER TO PROVIDE PRE-FINISHED METAL CANOPIES AND SUNSHADE DEVICES.
H. CONTRACTOR SHALL VERIFY AND COORDINATE ALL REQUIRED ROOF PENETRATIONS FOR ITEMS INDICATED ON M/E/P DRAWINGS THAT WILL PENETRATE ROOF.
I. REFER TO AND COMPLY WITH ARCHITECTURAL SHEET METAL MANUAL, LATEST EDITION, SMACNA.
J. GUTTERS AND DOWNSPOUTS SHALL BE PRE-FINISHED METAL.
K. REFER TO WALL SECTIONS FOR ROOF DETAILS

DS - DOWNSPOUT LOCATION

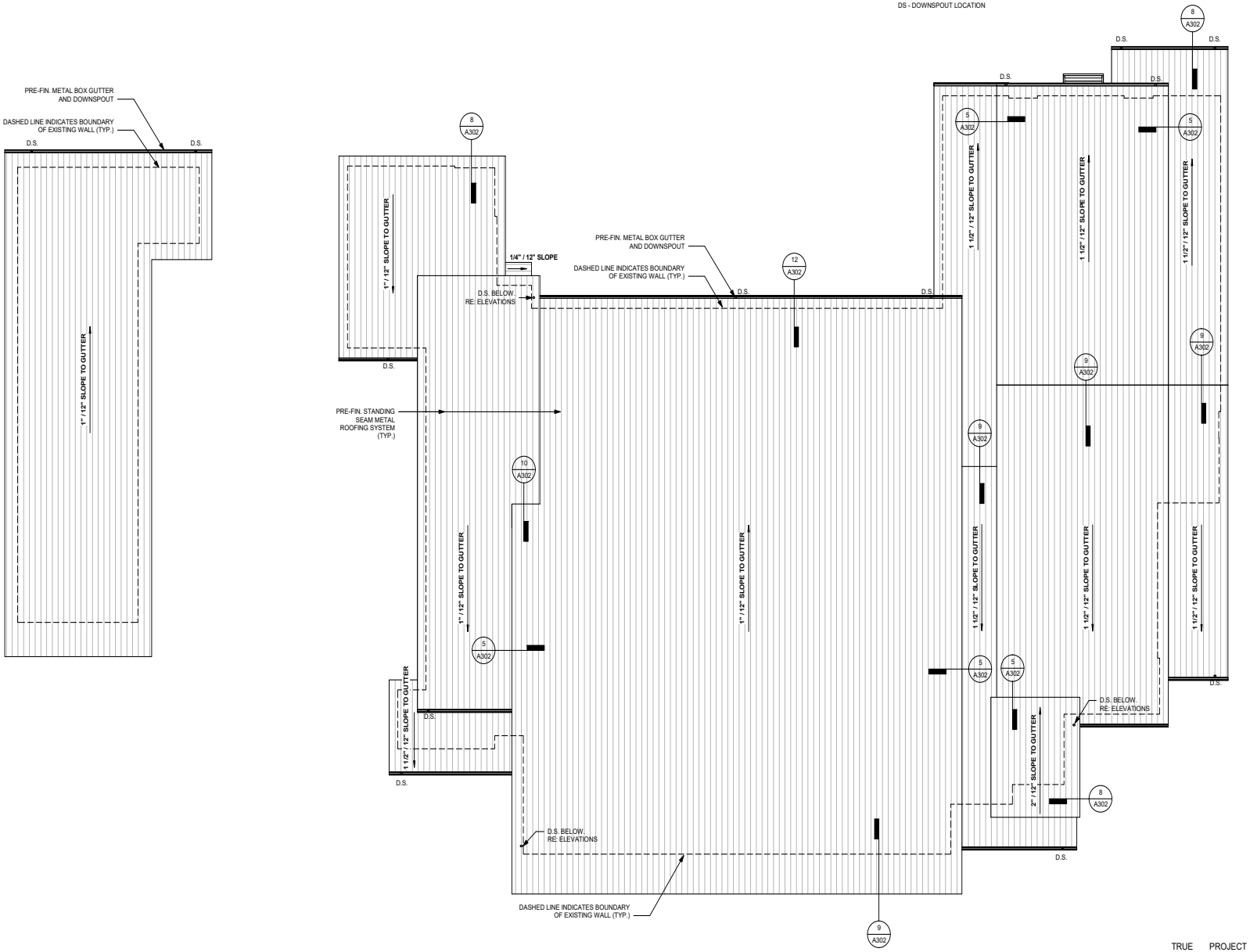

2 WASH BAY ROOF PLAN - ADD ALTERNATE #2
SCALE: 1/8" = 1'-0"

1 ROOF PLAN - BASE BID
SCALE: 1/8" = 1'-0"

TRUE NORTH
PROJECT NORTH

4.1379

PROFESSIONAL SEAL

REGISTERED ARCHITECT
JUSTIN E. MYERS
24640
STATE OF TEXAS

LOGO/CONTACT

martinez ARCHITECTS
Martinez Architect, LP
900 Rockmead, Suite 250
Houston, Texas 77339
281.346.7371

DESIGN TEAM

Architectural
Martinez Architects

Civil Engineer
Maverick Engineering

Structural
Matrix Structural engineers

M/E/P/T
DBR

Landscape Architect
KDC Associates

FIRE STATION #11

CITY OF MIDLAND
6600 BRIARWOOD AVE
MIDLAND, TX 79707

PROJECT No: MA 18017
DATE: 16-JAN-2020

ISSUE

100% DESIGN DEVELOPMENT
22-MAY-2019

75% CONSTRUCTION DOCUMENT
26-JUN-2019

100% ISSUE FOR PERMIT
30-JUL-2019

100% ISSUE FOR APPROVAL TO BID
16-JAN-2020

ROOF PLAN

A301

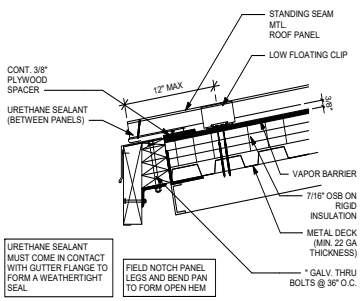

12 EAVE
SCALE: N/A

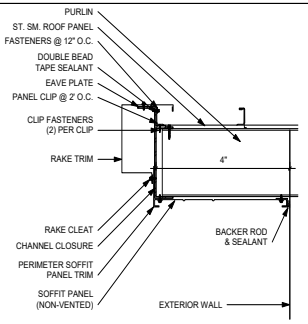

8 RAKE
SCALE: N/A

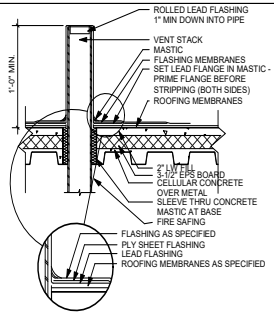

4 TYP ROOF PENETRATIONS
SCALE: N/A

GENERAL NOTES

1. ROOFING MANUF. / CONTRACTOR SHALL PROVIDE AND SUBMIT WEATHER-TIGHTNESS WARRANTY TO OWNER FOR APPROVAL AS SPECIFIED.
2. ROOFING MANUF. TO SUBMIT DETAILED SHOP DRAWINGS SHOWING ALL ROOF EDGE AND CONNECTION DETAILS FOR ARCHITECT'S APPROVAL
3. ALL EXTERIOR METAL TO BE SELECTED BY ARCHITECT FROM MANUF. FULL RANGE OF COLORS AND FINISHES.
4. COORD. MEP DWGS. FOR ALL ROOF PENETRATIONS. ALL PENETRATIONS SHALL BE FINISHED TO MATCH ROOF PANEL COLOR.
5. IN NO INSTANCE SHALL TREATED FRAMING BE IN DIRECT CONTACT WITH METAL ROOFING PANELS.
6. ALL CURBS TO BE SUPPLIED BY METAL ROOFING MANUF. NO FIELD FABRICATED CURBS SHALL BE PERMITTED.
7. ALL STANDING SEAM ROOF SLOPE ARE TO BE A MINIMUM OF 3:12 SLOPE UNLESS NOTED OTHERWISE. REFERENCE ROOF PLAN.
8. APPROVED METAL FLASHING AT ALL HIPS AND VALLEYS RE: DETAILS AND SPECS.
9. CONTRACTOR SHALL VERIFY AND COORDINATE ALL ROOF PENETRATIONS ON MEP AND STRUCTURAL.
10. SIDEWALL CONDITIONS MUST USE STEP FLASHING AS FOLLOWS:
    A. AT STANDING SEAM METAL ROOF ALL SIDEWALL CONDITIONS MUST USE STAINLESS STEEL THRU WALL FLASHING INCORPORATED INTO STANDARD PANEL MANUFRS. DETAILS
    B. SURFACE MOUNTED FLASHING IS NOT ACCEPTABLE.
11. PRE-FINISHED METAL GUTTER AND DOWNSPOUT TYP. RE: DETAILS AND SPECS.
12. REFER TO ARCHITECTURAL SHEET METAL MANUAL, LATEST EDITION, SMACNA.
13. DOWNSPOUTS TO TERMINATE TO UNDERGROUND STORM SYSTEM.
14. REFERENCE WALL SECTIONS FOR OVERHEAD DIMENSIONS.

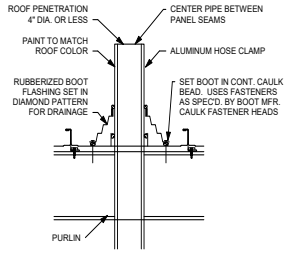

11 PENETRATION
SCALE: N/A

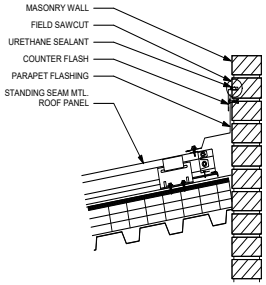

7 ROOF @ WALL
SCALE: 1 1/2" = 1'-0"

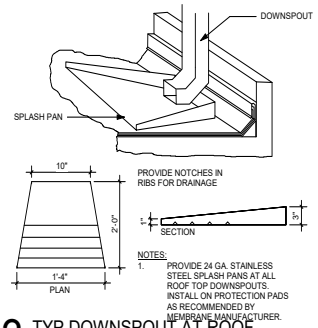

3 TYP DOWNSPOUT AT ROOF
SCALE: N/A

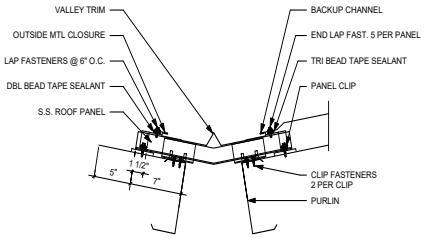

10 VALLEY
SCALE: N/A

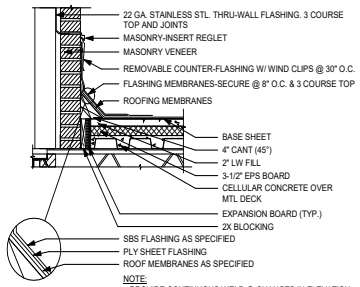

6 ROOF @ WALL
SCALE: 1 1/2" = 1'-0"

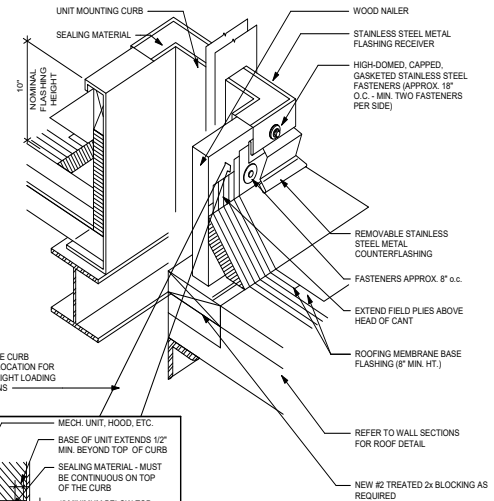

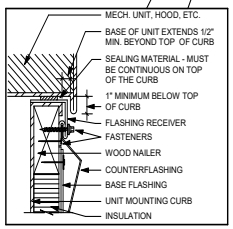

2 TYP EQUIPMENT CURB
SCALE: N/A

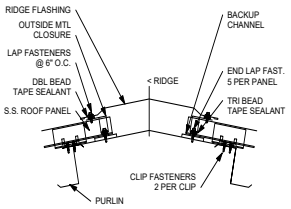

9 RIDGE
SCALE: N/A

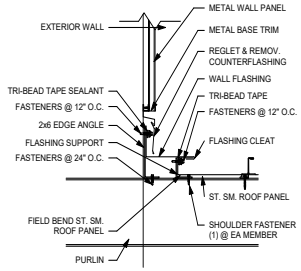

5 ROOF @ WALL
SCALE: N/A

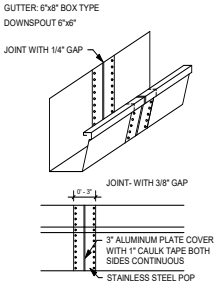

1 TYP ROOF PENETRATIONS
SCALE: N/A

PROFESSIONAL SEAL

REGISTERED ARCHITECT JUSTIN E. MARTINEZ 24640 STATE OF TEXAS

LOGO/CONTACT

martinez ARCHITECTS

Martinez Architect, LP
900 Rockmead, Suite 250
Houston, Texas 77339
281.346.7371

DESIGN TEAM

Architectural
Martinez Architects

Civil Engineer
Maverick Engineering

Structural
Matrix Structural engineers

M/E/P/T
DBR

Landscape Architect
KDC Associates

FIRE STATION #11

CITY OF MIDLAND
6600 BRIARWOOD AVE
MIDLAND, TX 79707

PROJECT No: **MA 18017**
DATE: **16-JAN-2020**

ISSUE

100% DESIGN DEVELOPMENT 22-MAY-2019
75% CONSTRUCTION DOCUMENT 26-JUN-2019
100% ISSUE FOR PERMIT 30-JUL-2019
100% ISSUE FOR APPROVAL TO BID 16-JAN-2020

ROOF DETAILS

A302

4.1380

ELEVATION KEY NOTES

1 STONE VENEER
2 PRE-FIN. STANDING SEAM MTL ROOF
3 BRICK VENEER
4 PRE-FIN. MTL PANELS - 1
5 CAST STONE
6 PRE-FIN. MTL PANELS - 2
7 PRE-FIN. ALUMINUM CANOPY
8 CONCRETE-FILLED STEEL PIPE BOLLARDS - RE: 6/A102
9 OVERHEAD COILING DOOR
10 PRE-FIN. MTL LETTERING
11 ARCHITECTURAL BRACKET
12 PRE-FIN MTL BI-FOLD DOORS
13 WOOD PLANK SCREEN WALL-RE: XXX/A103 & STRUCT.
14 CHAIN LINK FENCE
15 RADIO TOWER

GENERAL EXTERIOR ELEVATION NOTES

A. G.C. SHALL PROVIDE WIND LOAD CERTIFICATION FROM REGISTERED ENGINEER UPON COMPLETION OF PROJECT. ENGINEER TO CERTIFY 90 MPH FOR ALL COMPONENTS OF BUILDING INCLUDING BUT NOT LIMITED TO THE FOUNDATION, WALLS, DOORS, FRAMES, WINDOWS, AND ROOF.
B. G.C. TO COORDINATE ALL LOUVERS, VENTS AND OTHER PENETRATIONS WITH ARCHITECT PRIOR TO INSTALLATION.
C. G.C. TO PERFORM SMOKE TEST, SEAL ALL PENETRATION INDICATED BY RESULTS - COORDINATE WITH ARCHITECT/OWNER
D. TIE ALL DOWNSPOUTS TO UNDERGROUND STORM SYSTEM (RE: PLUMBING AND CIVIL)

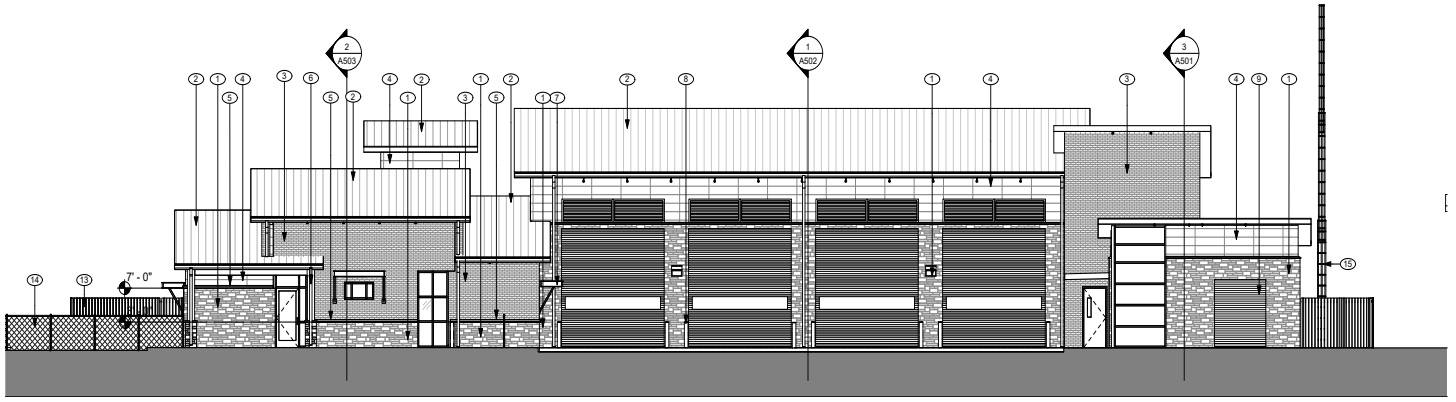

2 NORTH ELEVATION
SCALE: 1/8" = 1'-0"

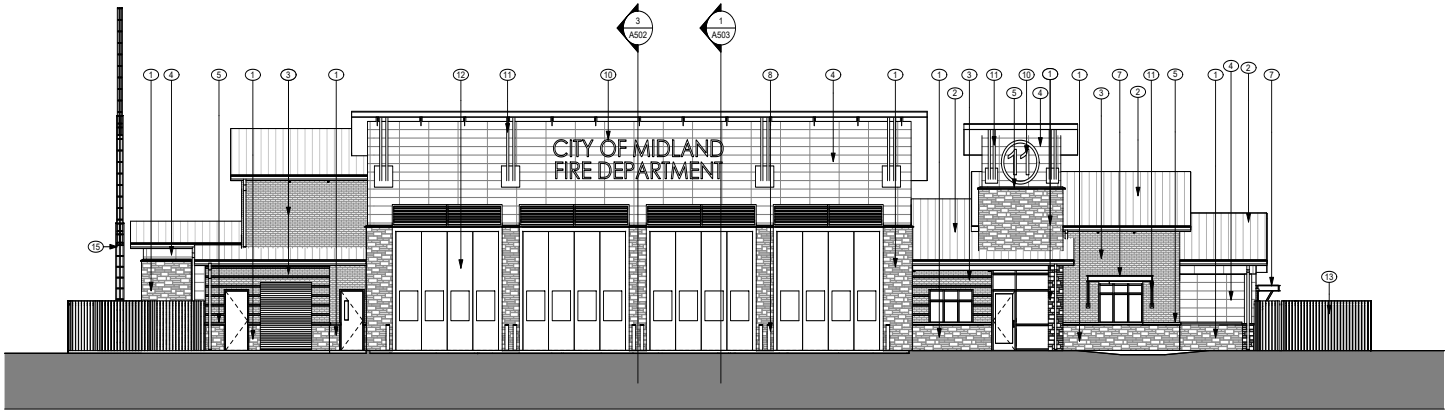

1 SOUTH ELEVATION
SCALE: 1/8" = 1'-0"

PROFESSIONAL SEAL

REGISTERED ARCHITECT JUSTIN E. MARTINEZ 24640 STATE OF TEXAS

LOGO/CONTACT

martinez ARCHITECTS

Martinez Architect, LP
900 Rockmead, Suite 250
Houston, Texas 77339
281.346.7371

DESIGN TEAM

Architectural
Martinez Architects

Civil Engineer
Maverick Engineering

Structural
Matrix Structural engineers

M/E/P/T
DBR

Landscape Architect
KDC Associates

FIRE STATION #11

CITY OF MIDLAND
6600 BRIARWOOD AVE
MIDLAND, TX 79707

PROJECT No: **MA 18017**
DATE: **16-JAN-2020**

ISSUE

100% DESIGN DEVELOPMENT
22-MAY-2019

75% CONSTRUCTION DOCUMENT
26-JUN-2019

100% ISSUE FOR PERMIT
30-JUL-2019

100% ISSUE FOR APPROVAL TO BID
16-JAN-2020

EXTERIOR ELEVATIONS - FIRE STATION

A401

4.1381

ELEVATION KEY NOTES

1 PRE-FIN. ALUMINUM CANOPY
2 BRICK VENEER
3 CAST STONE
4 STONE VENEER
5 PRE-FIN. MTL PANELS - 1
6 ARCHITECTURAL BRACKET
7 GUTTERS & DOWNSOPUTS, SEE DETAILS
8 CHAIN LINK FENCE
9 RADIO TOWER
10 WOOD PLANK SCREEN WALL-RE: XXX/A103 & STRUCT.

GENERAL EXTERIOR ELEVATION NOTES

A. G.C. SHALL PROVIDE WIND LOAD CERTIFICATION FROM REGISTERED ENGINEER UPON COMPLETION OF PROJECT. ENGINEER TO CERTIFY 90 MPH FOR ALL COMPONENTS OF BUILDING INCLUDING BUT NOT LIMITED TO THE FOUNDATION, WALLS, DOORS, FRAMES, WINDOWS, AND ROOF.
B. G.C. TO COORDINATE ALL LOUVERS, VENTS AND OTHER PENETRATIONS WITH ARCHITECT PRIOR TO INSTALLATION.
C. G.C. TO PERFORM SMOKE TEST. SEAL ALL PENETRATION INDICATED BY RESULTS - COORDINATE WITH ARCHITECT/OWNER
D. TIE ALL DOWNSPOUTS TO UNDERGROUND STORM SYSTEM (RE: PLUMBING AND CIVIL)

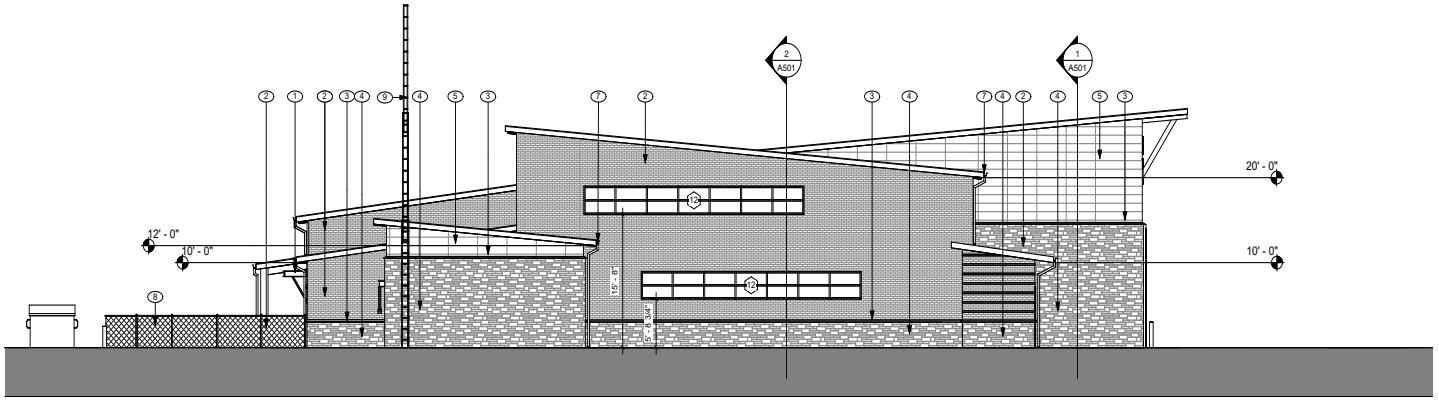

2 WEST ELEVATION
SCALE: 1/8" = 1'-0"

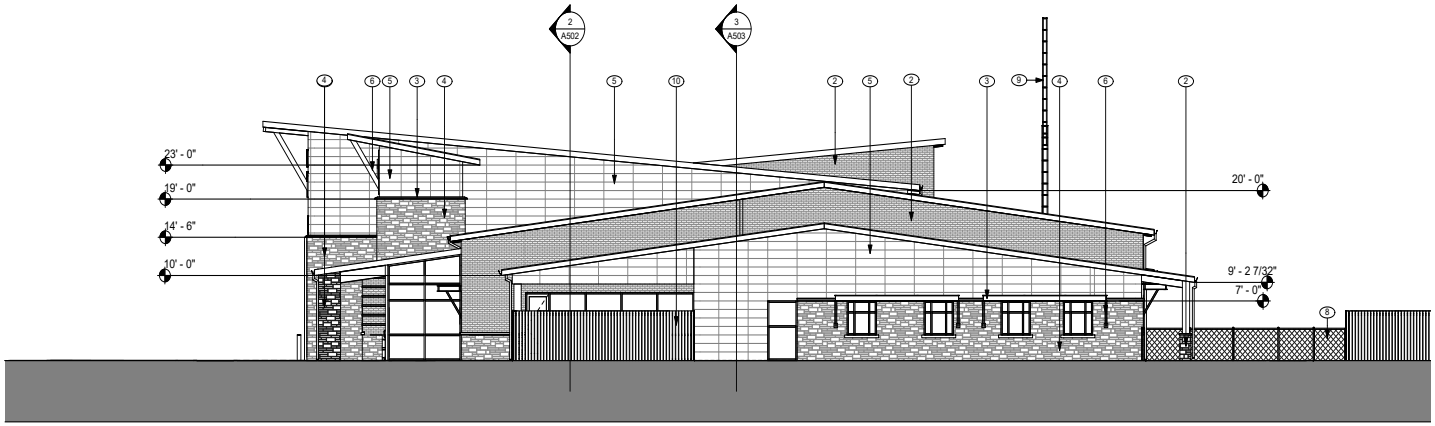

1 EAST ELEVATION
SCALE: 1/8" = 1'-0"

PROFESSIONAL SEAL

REGISTERED ARCHITECT JUSTIN E. MYERS 24640 STATE OF TEXAS

LOGO/CONTACT

martinez ARCHITECTS

Martinez Architect, LP
900 Rockmead, Suite 250
Houston, Texas 77339
281.346.7371

DESIGN TEAM

Architectural
Martinez Architects
Civil Engineer
Maverick Engineering
Structural
Matrix Structural engineers
M/E/P/T
DBR
Landscape Architect
KDC Associates

FIRE STATION #11

CITY OF MIDLAND
6600 BRIARWOOD AVE
MIDLAND, TX 79707

PROJECT No: **MA 18017**
DATE: **16-JAN-2020**

ISSUE

100% DESIGN DEVELOPMENT 22-MAY-2019
75% CONSTRUCTION DOCUMENT 26-JUN-2019
100% ISSUE FOR PERMIT 30-JUL-2019
100% ISSUE FOR APPROVAL TO BID 16-JAN-2020

EXTERIOR ELEVATIONS - FIRE STATION

A402

4.1382

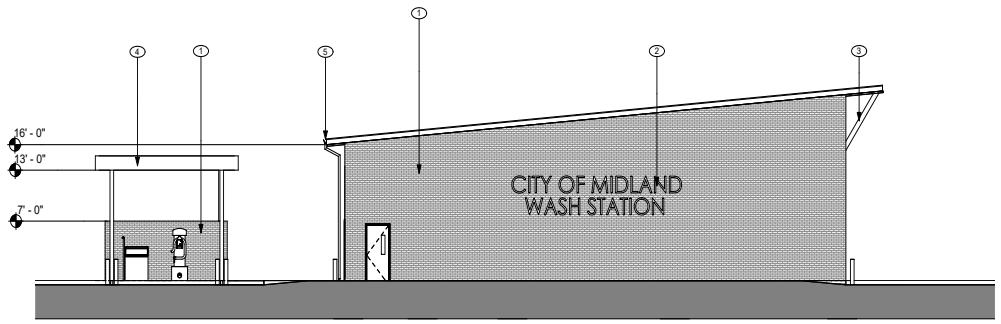

1 WEST ELEVATION - ADD ALTERNATE #2
SCALE: 1/8" = 1'-0"

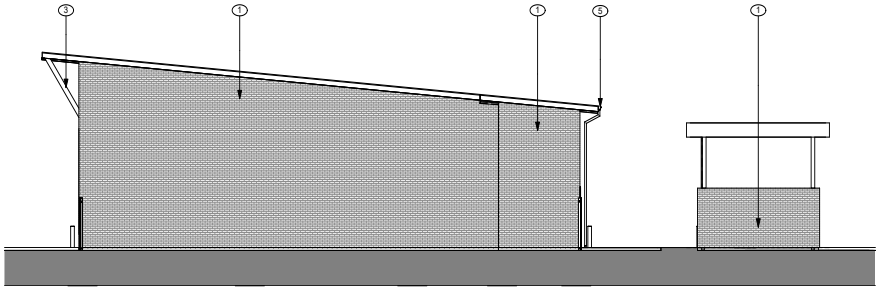

2 EAST ELEVATION - ADD ALTERNATE #2
SCALE: 1/8" = 1'-0"

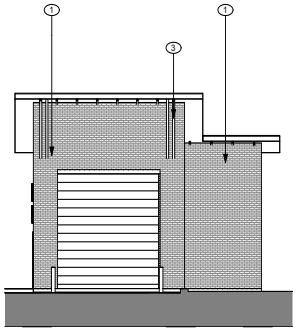

3 SOUTH ELEV - ADD ALTERNATE #2
SCALE: 1/8" = 1'-0"

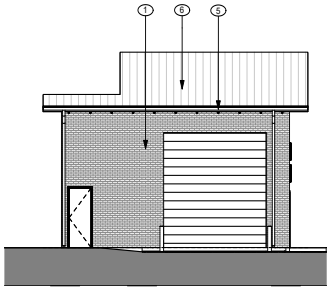

4 NORTH ELEV. - ADD ALTERNATE #2
SCALE: 1/8" = 1'-0"

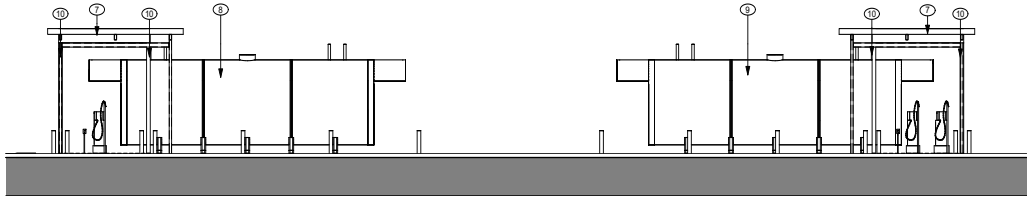

5 FUEL TANK ELEVATION - ADD ALTERNATE #1
SCALE: 1/8" = 1'-0"

GENERAL EXTERIOR ELEVATION NOTES

A. G.C. SHALL PROVIDE WIND LOAD CERTIFICATION FROM REGISTERED ENGINEER UPON COMPLETION OF PROJECT. ENGINEER TO CERTIFY 90 MPH FOR ALL COMPONENTS OF BUILDING INCLUDING BUT NOT LIMITED TO THE FOUNDATION, WALLS, DOORS, FRAMES, WINDOWS, AND ROOF.
B. G.C. TO COORDINATE ALL LOUVERS, VENTS AND OTHER PENETRATIONS WITH ARCHITECT PRIOR TO INSTALLATION.
C. G.C. TO PERFORM SMOKE TEST, SEAL ALL PENETRATION INDICATED BY RESULTS - COORDINATE WITH ARCHITECT/OWNER
D. TIE ALL DOWNSPOUTS TO UNDERGROUND STORM SYSTEM (RE: PLUMBING AND CIVIL)

ELEVATION KEY NOTES

1 8" STRUCTURAL BRICK. RE: STRUCTURAL
2 PRE-FIN. MTL LETTERING
3 ARCHITECTURAL BRACKET
4 OVERHEAD CANOPY
5 GUTTERS & DOWNSOPUTS, SEE DETAILS
6 PRE-FIN. STANDING SEAM MTL ROOF
7 PRE-FIN. ALUMINUM CANOPY
8 20,000 GALLON ABOVE-GROUND GASONLINE TANK
9 20,000 GALLON ABOVE-GROUND DIESEL TANK
10 PAINTED METAL COLUMNS

PROFESSIONAL SEAL

REGISTERED ARCHITECT JUSTIN E. MYERS 24640 STATE OF TEXAS

LOGO/CONTACT

martinez ARCHITECTS
Martinez Architect, LP
900 Rockmead, Suite 250
Houston, Texas 77339
281.346.7371

DESIGN TEAM

Architectural
Martinez Architects
Civil Engineer
Maverick Engineering
Structural
Matrix Structural engineers
M/E/P/T
DBR
Landscape Architect
KDC Associates

FIRE STATION #11
CITY OF MIDLAND
6600 BRIARWOOD AVE
MIDLAND, TX 79707

PROJECT No: **MA 18017**
DATE: **16-JAN-2020**

ISSUE
100% DESIGN DEVELOPMENT 22-MAY-2019
75% CONSTRUCTION DOCUMENT 26-JUN-2019
100% ISSUE FOR PERMIT 30-JUL-2019
100% ISSUE FOR APPROVAL TO BID 16-JAN-2020

EXTERIOR ELEVATIONS - ALTERNATES #1 & #2

A403

4.1383

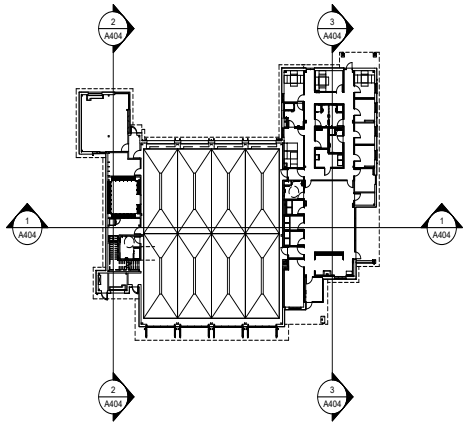

4 KEY PLAN

3 BUILDING SECTION
SCALE: 1/8" = 1'-0"

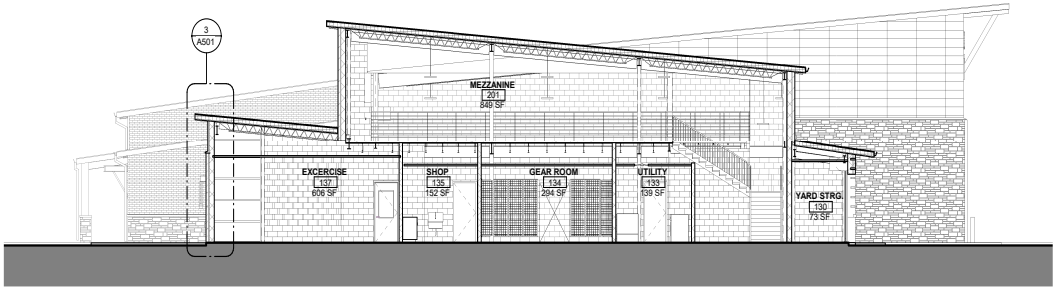

2 BUILDING SECTION
SCALE: 1/8" = 1'-0"

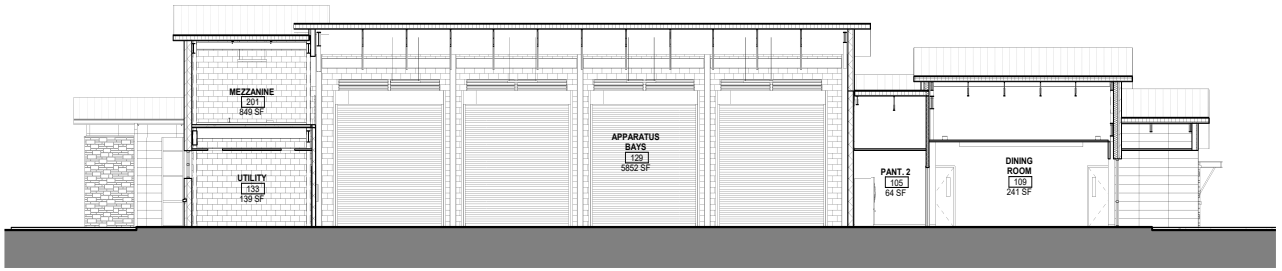

1 BUILDING SECTION
SCALE: 1/8" = 1'-0"

4.1384

PROFESSIONAL SEAL

REGISTERED ARCHITECT
JUSTIN E. MYERS
24640
STATE OF TEXAS

LOGO/CONTACT

martinez ARCHITECTS

Martinez Architect, LP
900 Rockmead, Suite 250
Houston, Texas 77339
281.346.7371

DESIGN TEAM

Architectural
Martinez Architects

Civil Engineer
Maverick Engineering

Structural
Matrix Structural engineers

M/E/P/T
DBR

Landscape Architect
KDC Associates

FIRE STATION #11

CITY OF MIDLAND
6600 BRIARWOOD AVE
MIDLAND, TX 79707

PROJECT No: **MA 18017**
DATE: **16-JAN-2020**

ISSUE

100% DESIGN DEVELOPMENT
22-MAY-2019

75% CONSTRUCTION DOCUMENT
26-JUN-2019

100% ISSUE FOR PERMIT
30-JUL-2019

100% ISSUE FOR APPROVAL TO BID
16-JAN-2020

BUILDING SECTIONS

A404

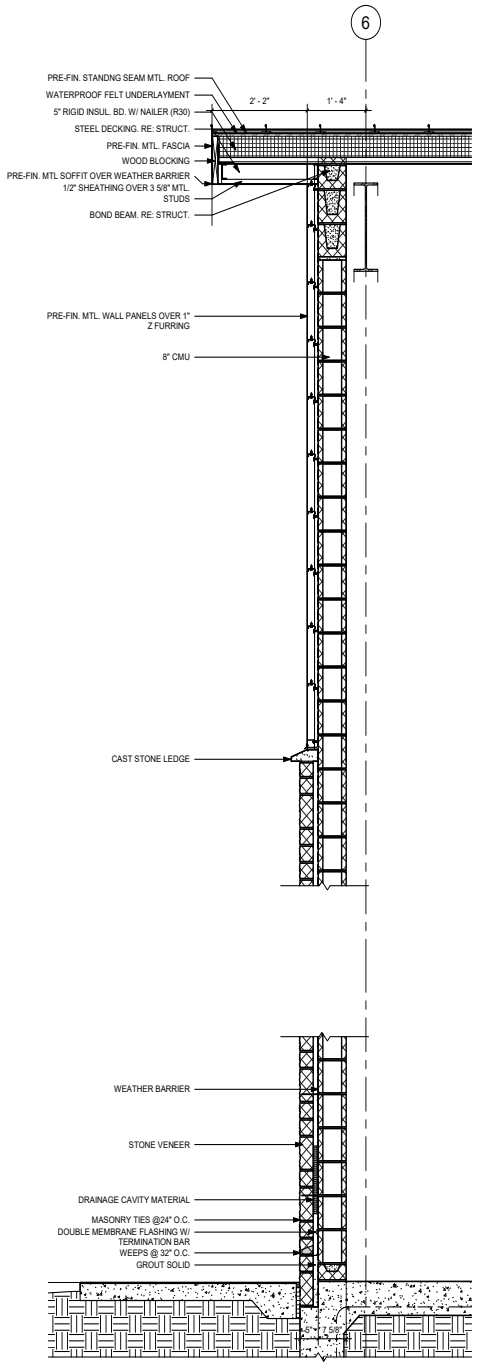

1 WALL SECTION
SCALE: 3/4" = 1'-0"

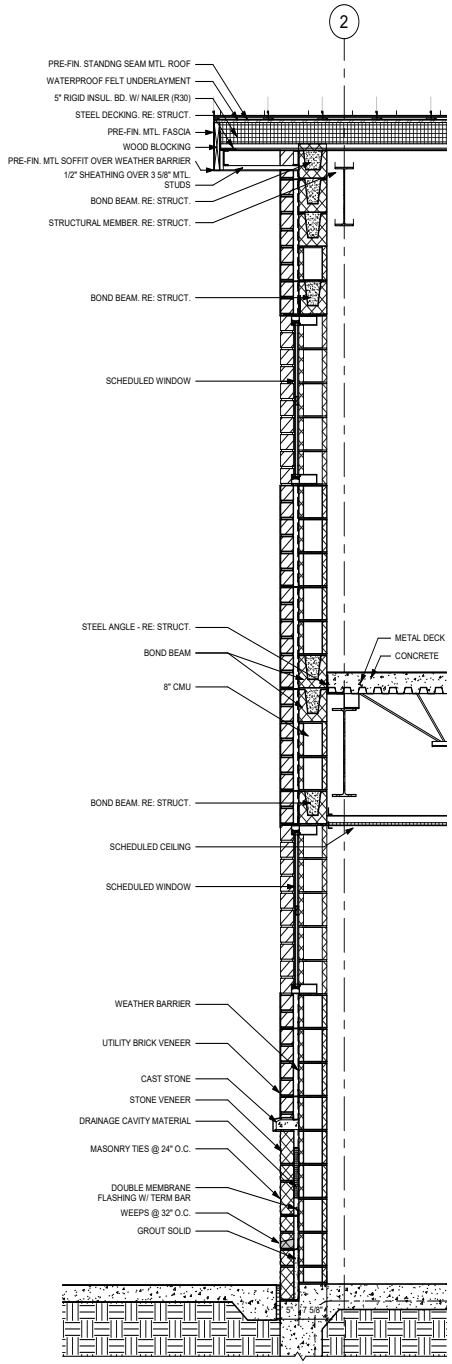

2 WALL SECTION
SCALE: 3/4" = 1'-0"

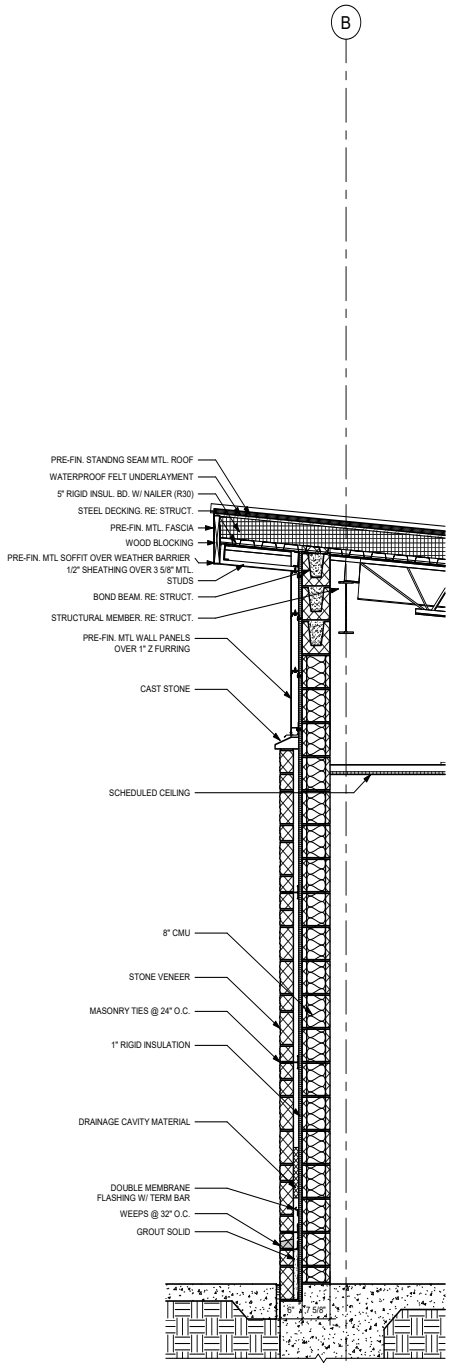

3 WALL SECTION
SCALE: 3/4" = 1'-0"

4.1385

PROFESSIONAL SEAL

REGISTERED ARCHITECT JUSTIN E. MYERS 24640 STATE OF TEXAS

LOGO/CONTACT

martinez ARCHITECTS

Martinez Architect, LP
900 Rockmead, Suite 250
Houston, Texas 77339
281.346.7371

DESIGN TEAM

Architectural
Martinez Architects

Civil Engineer
Maverick Engineering

Structural
Matrix Structural engineers

M/E/P/T
DBR

Landscape Architect
KDC Associates

FIRE STATION #11

CITY OF MIDLAND
6600 BRIARWOOD AVE
MIDLAND, TX 79707

PROJECT No: **MA 18017**
DATE: **16-JAN-2020**

ISSUE

100% DESIGN DEVELOPMENT
22-MAY-2019

75% CONSTRUCTION DOCUMENT
26-JUN-2019

100% ISSUE FOR PERMIT
30-JUL-2019

100% ISSUE FOR APPROVAL TO BID
16-JAN-2020

WALL SECTIONS - FIRE STATION

A501

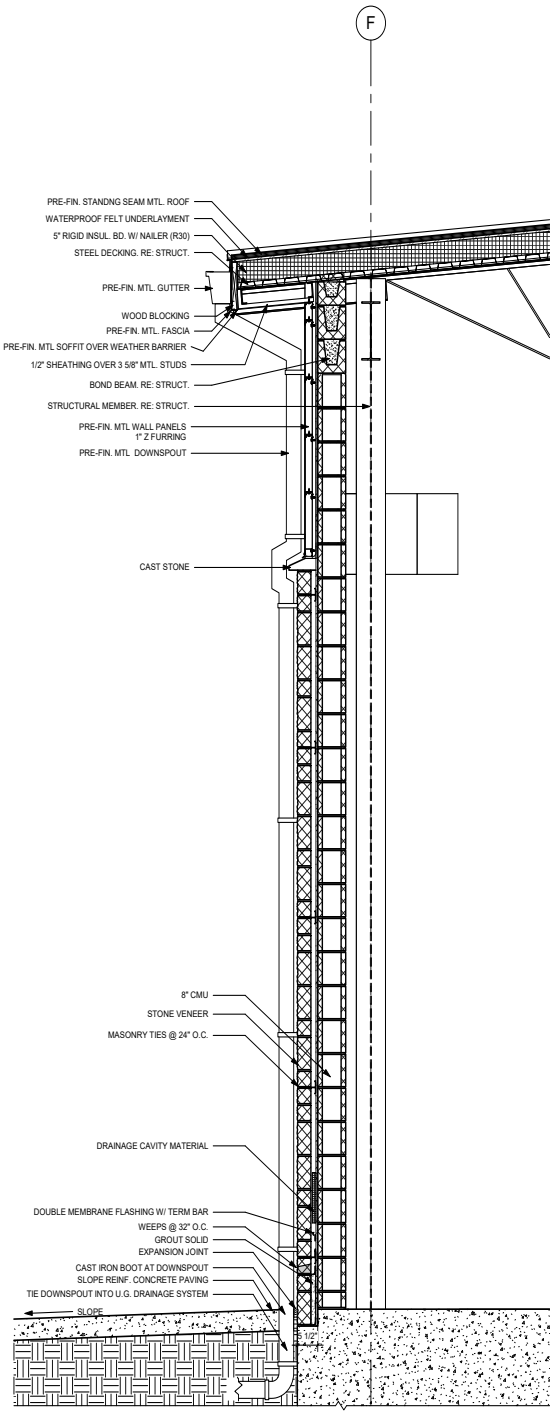

1 WALL SECTION
SCALE: 3/4" = 1'-0"

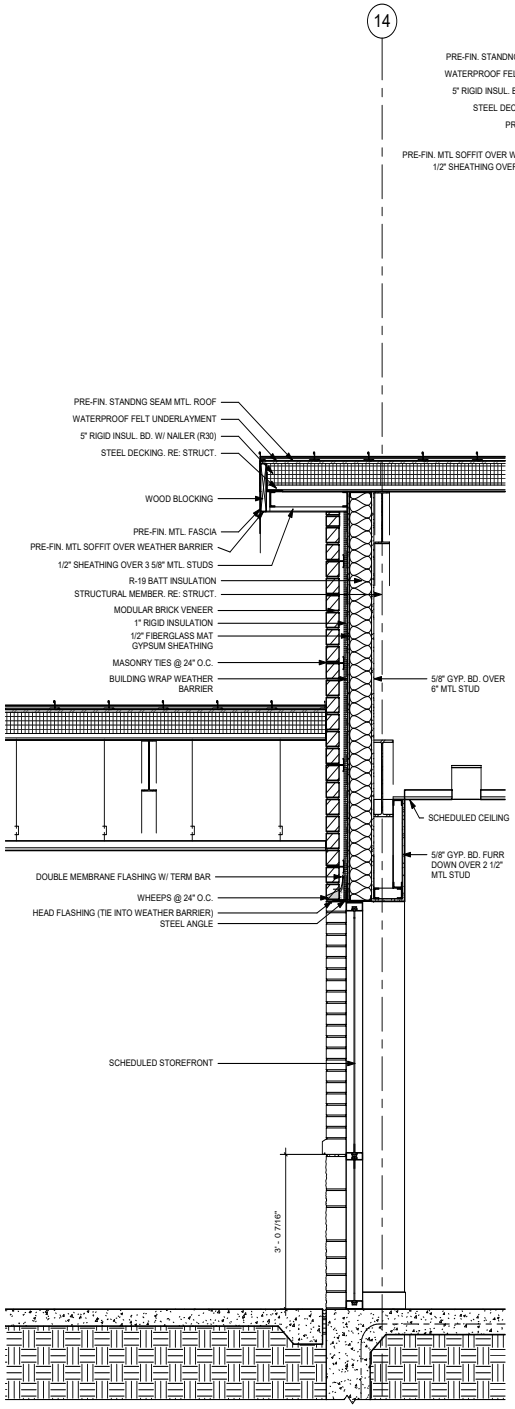

2 WALL SECTION
SCALE: 3/4" = 1'-0"

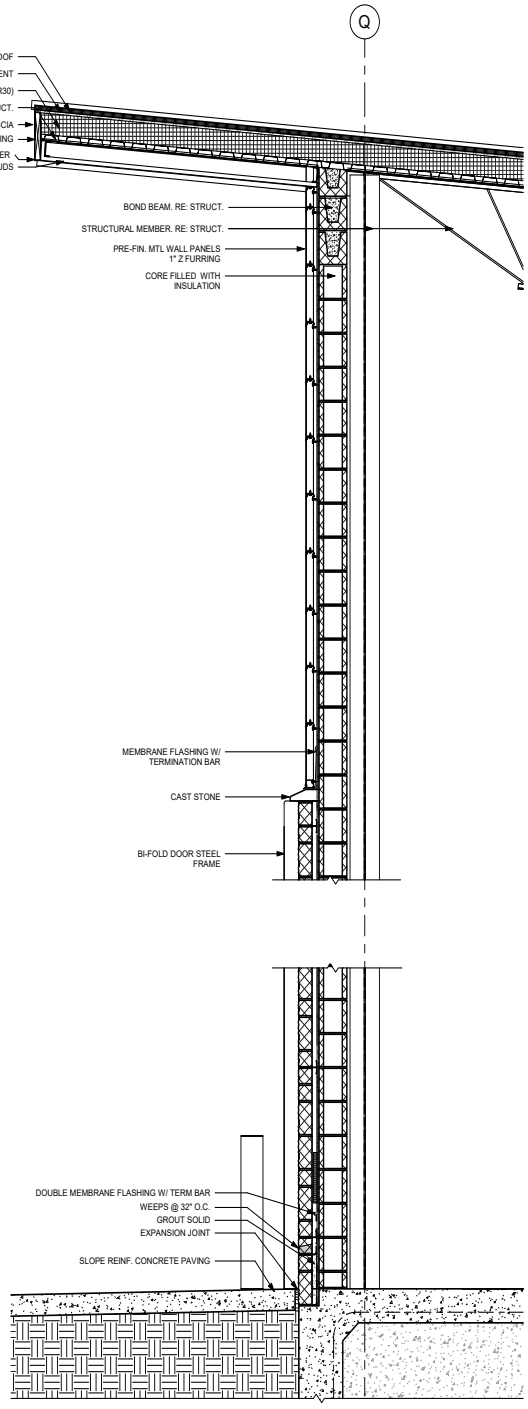

3 WALL SECTION
SCALE: 3/4" = 1'-0"

4.1386

PROFESSIONAL SEAL

REGISTERED ARCHITECT JUSTIN E. MYERS 24640 STATE OF TEXAS

LOGO/CONTACT

martinez ARCHITECTS

Martinez Architect, LP
900 Rockmead, Suite 250
Houston, Texas 77339
281.346.7371

DESIGN TEAM

Architectural
Martinez Architects

Civil Engineer
Maverick Engineering

Structural
Matrix Structural engineers

M/E/P/T
DBR

Landscape Architect
KDC Associates

FIRE STATION #11

CITY OF MIDLAND
6600 BRIARWOOD AVE
MIDLAND, TX 79707

PROJECT No: **MA 18017**
DATE: **16-JAN-2020**

ISSUE

100% DESIGN DEVELOPMENT 22-MAY-2019
75% CONSTRUCTION DOCUMENT 26-JUN-2019
100% ISSUE FOR PERMIT 30-JUL-2019
100% ISSUE FOR APPROVAL TO BID 16-JAN-2020

WALL SECTIONS - FIRE STATION

A502

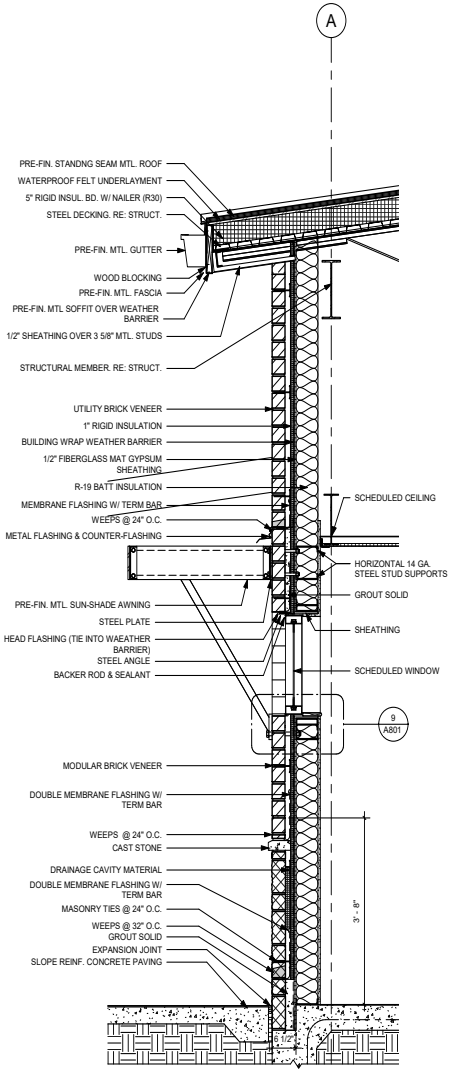

2 WALL SECTION
SCALE: 3/4" = 1'-0"

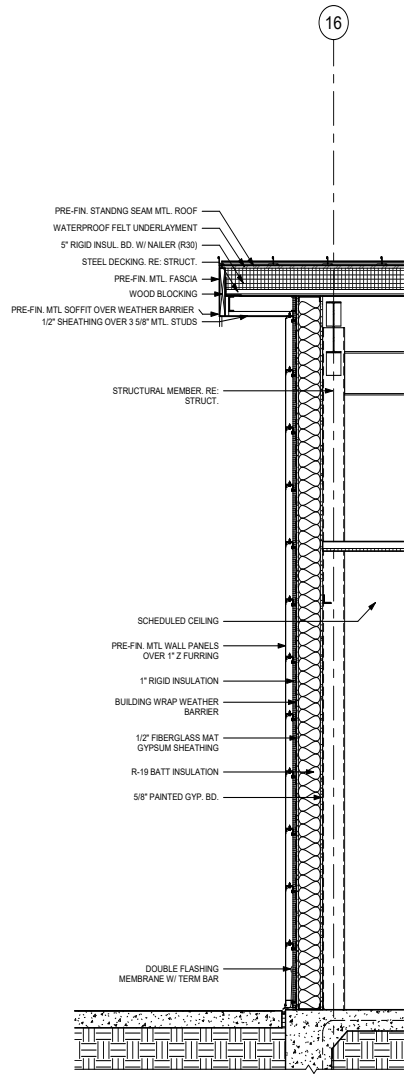

3 WALL SECTION
SCALE: 3/4" = 1'-0"

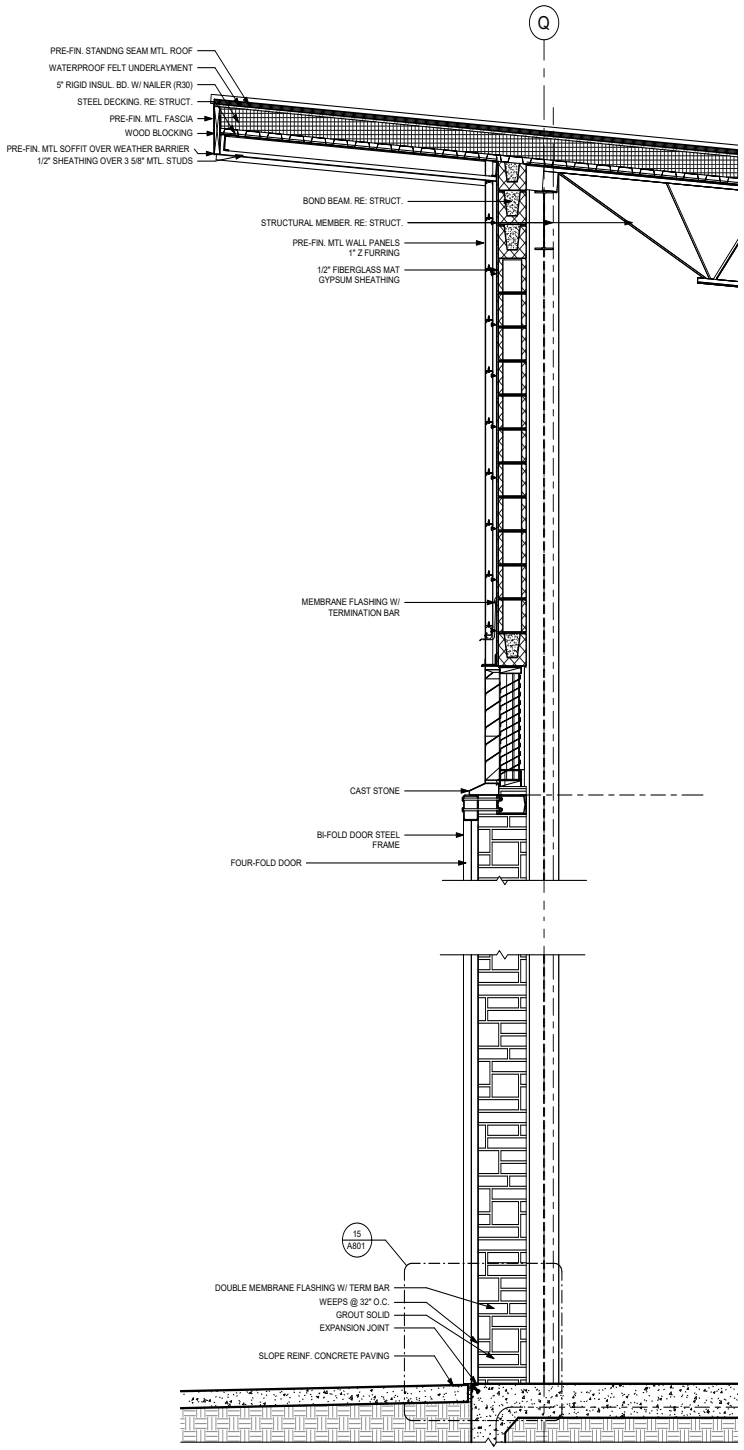

1 WALL SECTION
SCALE: 3/4" = 1'-0"

4.1387

PROFESSIONAL SEAL

REGISTERED ARCHITECT
JUSTIN E. MYERS
24640
STATE OF TEXAS

LOGO/CONTACT

martinez ARCHITECTS

Martinez Architect, LP
900 Rockmead, Suite 250
Houston, Texas 77339
281.346.7371

DESIGN TEAM

Architectural
Martinez Architects

Civil Engineer
Maverick Engineering

Structural
Matrix Structural engineers

M/E/P/T
DBR

Landscape Architect
KDC Associates

FIRE STATION #11

CITY OF MIDLAND
6600 BRIARWOOD AVE
MIDLAND, TX 79707

PROJECT No: **MA 18017**
DATE: **16-JAN-2020**

ISSUE

100% DESIGN DEVELOPMENT 22-MAY-2019
75% CONSTRUCTION DOCUMENT 26-JUN-2019
100% ISSUE FOR PERMIT 30-JUL-2019
100% ISSUE FOR APPROVAL TO BID 16-JAN-2020

WALL SECTIONS - FIRE STATION

A503

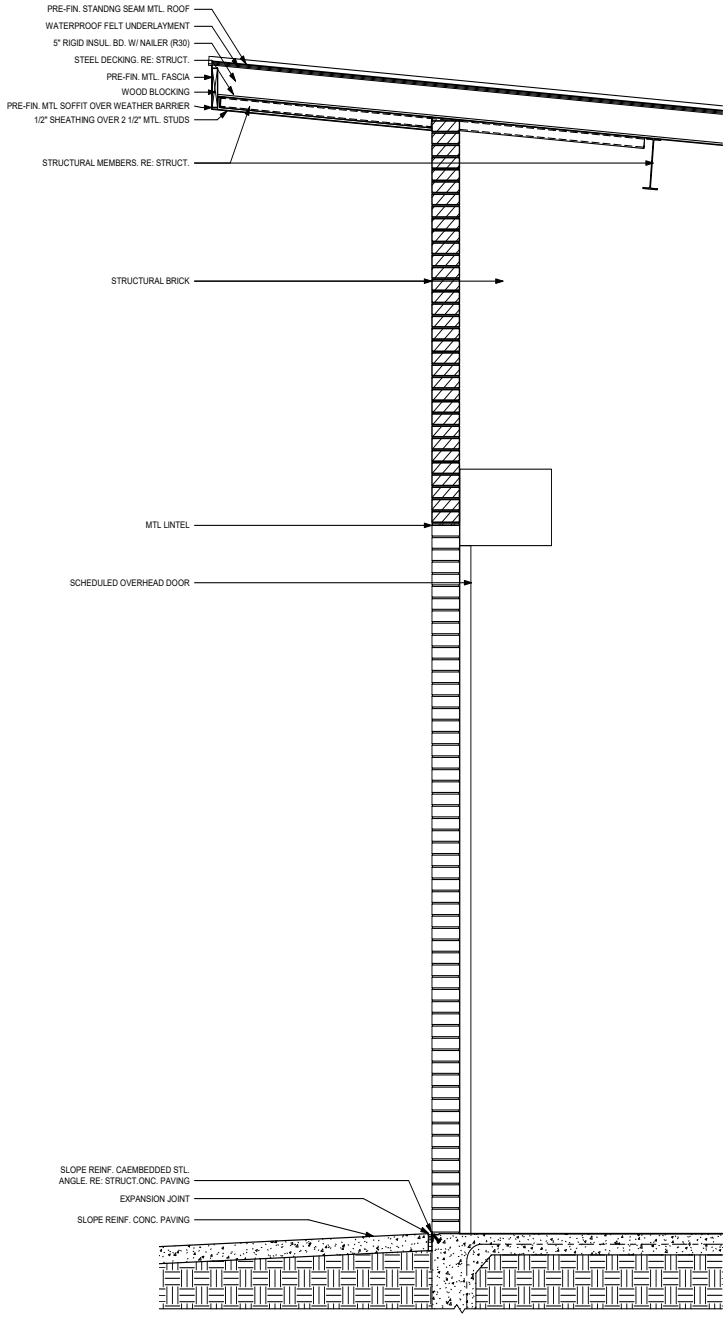

2 WALL SECTION - ADD ALTERNATE #2
SCALE: 3/4" = 1'-0"

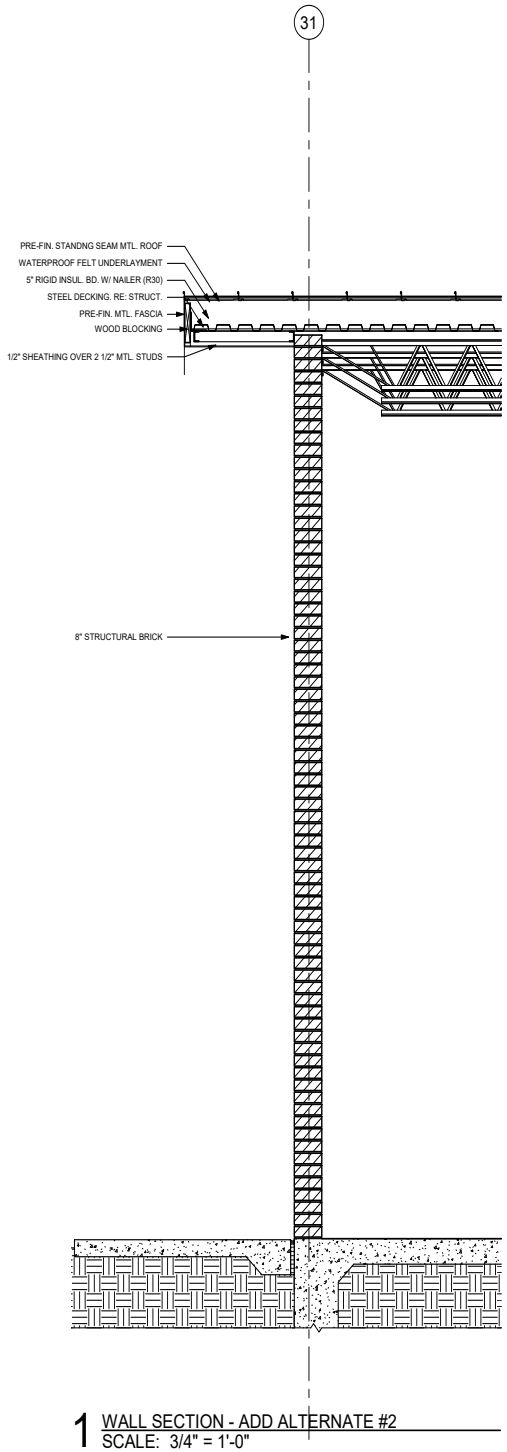

1 WALL SECTION - ADD ALTERNATE #2
SCALE: 3/4" = 1'-0"

4.1388

PROFESSIONAL SEAL

REGISTERED ARCHITECT
JUSTIN E. MYERS
24640
STATE OF TEXAS

LOGO/CONTACT

martinez ARCHITECTS

Martinez Architect, LP
900 Rockmead, Suite 250
Houston, Texas 77339
281.346.7371

DESIGN TEAM

Architectural
Martinez Architects

Civil Engineer
Maverick Engineering

Structural
Matrix Structural engineers

M/E/P/T
DBR

Landscape Architect
KDC Associates

FIRE STATION #11

CITY OF MIDLAND
6600 BRIARWOOD AVE
MIDLAND, TX 79707

PROJECT No: **MA 18017**
DATE: **16-JAN-2020**

ISSUE

100% DESIGN DEVELOPMENT 22-MAY-2019
75% CONSTRUCTION DOCUMENT 26-JUN-2019
100% ISSUE FOR PERMIT 30-JUL-2019
100% ISSUE FOR APPROVAL TO BID 16-JAN-2020

WALL SECTIONS - BID ALTERNATE #2

A504

ENLARGED PLAN GENERAL NOTES

A. INSTALL CURBS AT NON-ACCESSIBLE SHOWERS.
B. INSTALL ALL PLUMBING ACCESS PANELS NOT TO CONFLICT W/ TOILET ACCESSORIES.
C. COORDINATE ALL TOILET ACCESSORIES AND INSTALLATION w/ ARCHITECT/OWNER. ALL ACCESSORIES TO HAVE TUMBLER LATCH KNOB (NO KEYED LOCKS)
D. SHEET G001 FOR TYPICAL ACCESSIBLE DIMENSIONS & MOUNTING HEIGHTS.

ENLARGED FLOOR PLAN KEYED NOTES (#)

1 SHOWER / EYEWASH RE: PLUMB
2 TOILET PAPER DISPENSER (MOUNT @ 19" A.F.F.)
3 MIRROR - 24"W x 36"H
4 CONTINUOUS SHOWER GRAB BAR w/ SLIP-RESISTANT SURFACE
5 SHOWER CURTAIN, ROD & HOOKS
6 MOP SINK
7 METAL STAIR
8 MIRROR - 36"W x 36"H
9 RECESSED SHOWER SHELF
10 ICE MACHINE BY OWNER G.C. TO INSTALL
11 COMMERCIAL WASHER/ DRYER BY OWNER G.C. INSTALL
12 WALL-MOUNTED LIQUID SOAP DISPENSER
13 TWO CLOTHING HOOKS
14 36" & 42" GRAB BAR w/ SLIP-RESISTANT SURFACE
15 PAPER TOWEL DISPENSER/RECEPTACLE - PROVIDED BY OWNER
16 65 LB UNIMAC EXTRACTOR

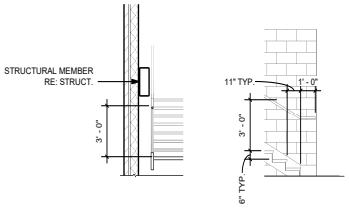

6 STAIR DETAILS
SCALE: 1/4" = 1'-0"

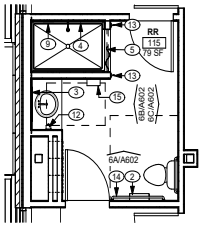

3 RESTROOM 115
SCALE: 1/4" = 1'-0"

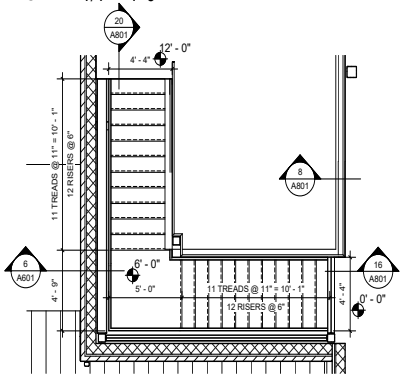

5 STAIR
SCALE: 1/4" = 1'-0"

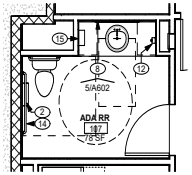

2 RESTROOM 107
SCALE: 1/4" = 1'-0"

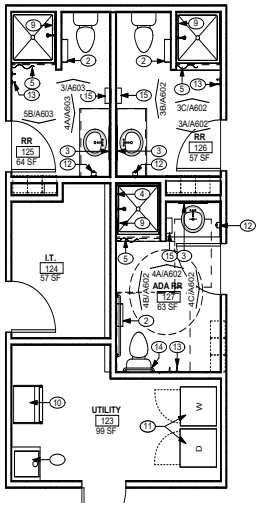

4 UTILITY/RESTROOM CORE
SCALE: 1/4" = 1'-0"

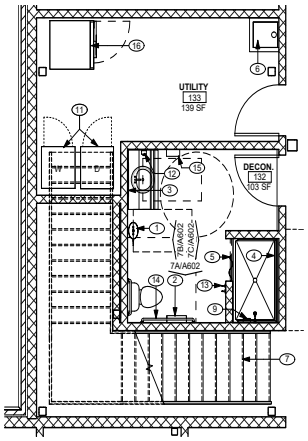

1 UTILITY/DECON
SCALE: 1/4" = 1'-0"

TRUE NORTH
PROJECT NORTH

PROFESSIONAL SEAL

REGISTERED ARCHITECT
JUSTIN E. MYERS
24640
STATE OF TEXAS

LOGO/CONTACT

martinez ARCHITECTS

Martinez Architect, LP
900 Rockmead, Suite 250
Houston, Texas 77339
281.346.7371

DESIGN TEAM

Architectural
Martinez Architects

Civil Engineer
Maverick Engineering

Structural
Matrix Structural engineers

M/E/P/T
DBR

Landscape Architect
KDC Associates

FIRE STATION #11

CITY OF MIDLAND
6600 BRIARWOOD AVE
MIDLAND, TX 79707

PROJECT No: MA 18017
DATE: 16-JAN-2020

ISSUE
100% DESIGN DEVELOPMENT 22-MAY-2019
75% CONSTRUCTION DOCUMENT 26-JUN-2019
100% ISSUE FOR PERMIT 30-JUL-2019
100% ISSUE FOR APPROVAL TO BID 16-JAN-2020

ENLARGED FLOOR PLANS

A601

4.1389

NOTE:
FULL HEIGHT TILE @ SHOWERS

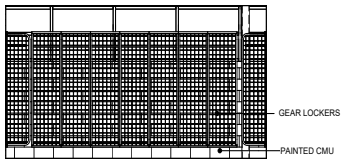

9A GEAR ROOM 134
SCALE: 1/4" = 1'-0"

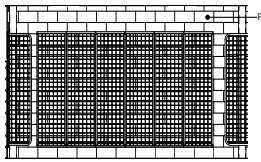

9B GEAR ROOM 134
SCALE: 1/4" = 1'-0"

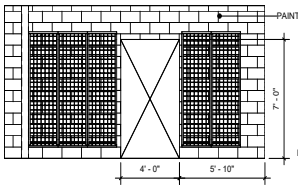

9C GEAR ROOM 134
SCALE: 1/4" = 1'-0"

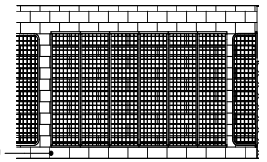

9D GEAR ROOM 134
SCALE: 1/4" = 1'-0"

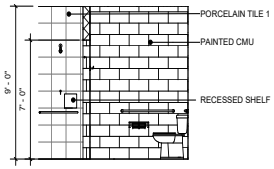

7A DECON 132
SCALE: 1/4" = 1'-0"

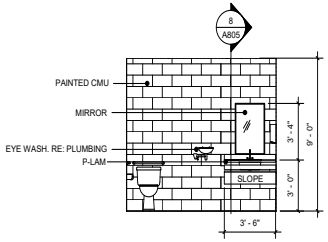

7B DECON 132
SCALE: 1/4" = 1'-0"

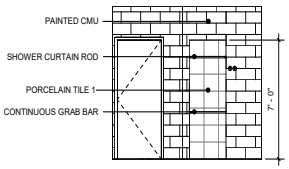

7C DECON 132
SCALE: 1/4" = 1'-0"

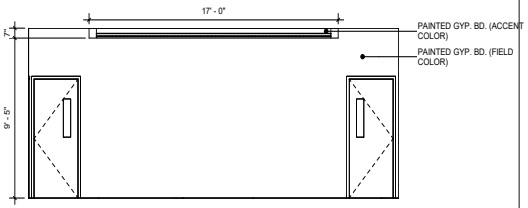

8 DAY ROOM
SCALE: 1/4" = 1'-0"

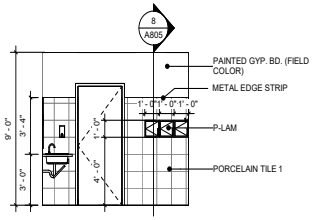

4C RESTROOM 127
SCALE: 1/4" = 1'-0"

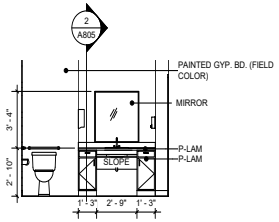

5 RESTROOM 107
SCALE: 1/4" = 1'-0"

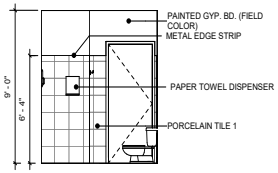

6A RESTROOM 115
SCALE: 1/4" = 1'-0"

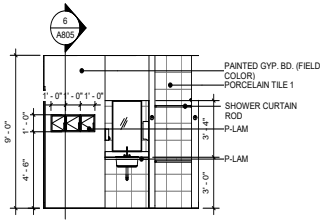

6B RESTROOM 115
SCALE: 1/4" = 1'-0"

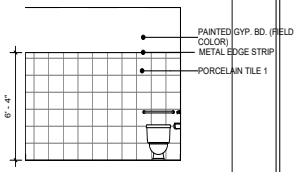

6C RESTROOM 115
SCALE: 1/4" = 1'-0"

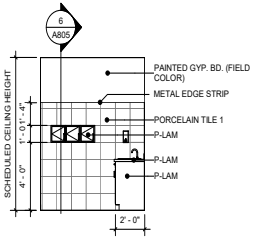

3A RESTROOM 126
SCALE: 1/4" = 1'-0"

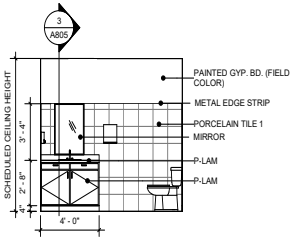

3B RESTROOM 126
SCALE: 1/4" = 1'-0"

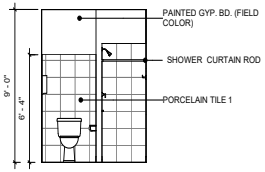

3C RESTROOM 126
SCALE: 1/4" = 1'-0"

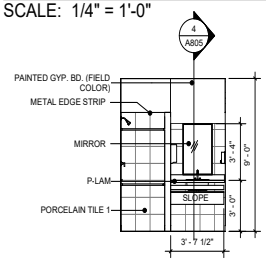

4A RESTROOM 127
SCALE: 1/4" = 1'-0"

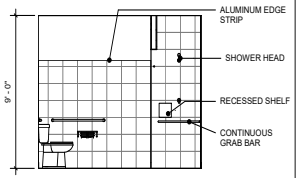

4B RESTROOM 127
SCALE: 1/4" = 1'-0"

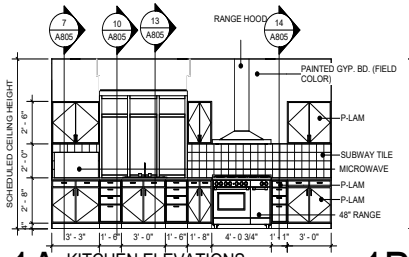

1A KITCHEN ELEVATIONS
SCALE: 1/4" = 1'-0"

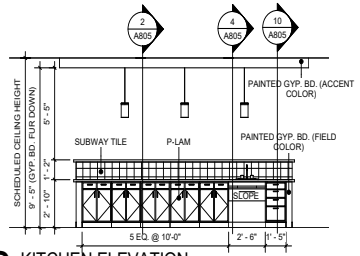

1B KITCHEN ELEVATION
SCALE: 1/4" = 1'-0"

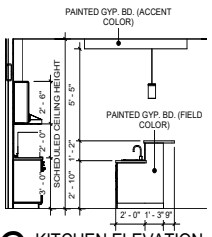

1C KITCHEN ELEVATION
SCALE: 1/4" = 1'-0"

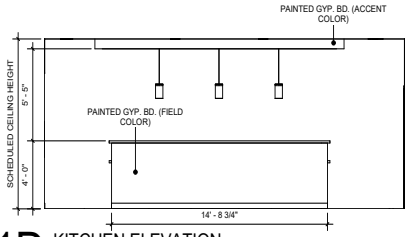

1D KITCHEN ELEVATION
SCALE: 1/4" = 1'-0"

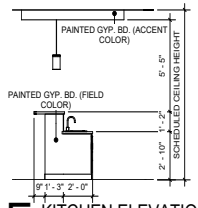

1E KITCHEN ELEVATION
SCALE: 1/4" = 1'-0"

4.1390

PROFESSIONAL SEAL

REGISTERED ARCHITECT
JUSTIN E. MARTINEZ
24640
STATE OF TEXAS

LOGO/CONTACT

martinez ARCHITECTS

Martinez Architect, LP
900 Rockmead, Suite 250
Houston, Texas 77339
281.346.7371

DESIGN TEAM

Architectural
Martinez Architects

Civil Engineer
Maverick Engineering

Structural
Matrix Structural engineers

M/E/P/T
DBR

Landscape Architect
KDC Associates

FIRE STATION #11

CITY OF MIDLAND
6600 BRIARWOOD AVE
MIDLAND, TX 79707

PROJECT No: MA 18017
DATE: 16-JAN-2020

ISSUE
100% DESIGN DEVELOPMENT 22-MAY-2019
75% CONSTRUCTION DOCUMENT 26-JUN-2019
100% ISSUE FOR PERMIT 30-JUL-2019
100% ISSUE FOR APPROVAL TO BID 16-JAN-2020

INTERIOR ELEVATIONS

A602

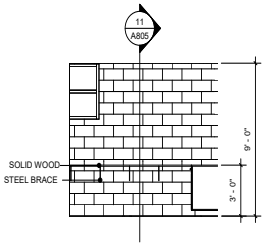

6A SHOP 135
SCALE: 1/4" = 1'-0"

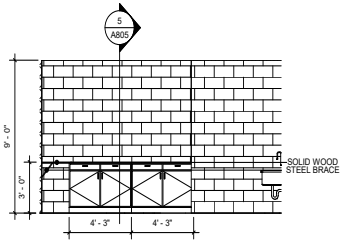

6B SHOP 135
SCALE: 1/4" = 1'-0"

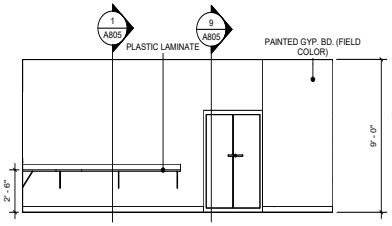

1 OFFICE 1
SCALE: 1/4" = 1'-0"

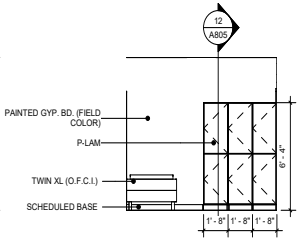

2 DORM 3
SCALE: 1/4" = 1'-0"

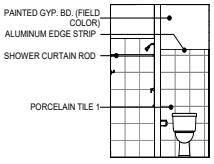

3 RESTROOM 125
SCALE: 1/4" = 1'-0"

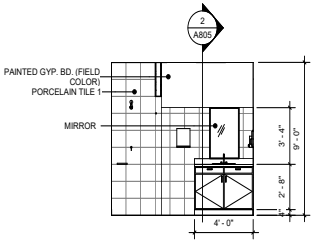

4A RESTROOM 125
SCALE: 1/4" = 1'-0"

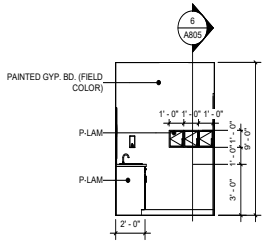

5B RESTROOM 125
SCALE: 1/4" = 1'-0"

4.1391

PROFESSIONAL SEAL

REGISTERED ARCHITECT
JUSTIN E. MARTINEZ
24640
STATE OF TEXAS

LOGO/CONTACT

martinez ARCHITECTS

Martinez Architect, LP
900 Rockmead, Suite 250
Houston, Texas 77339
281.346.7371

DESIGN TEAM

Architectural
Martinez Architects

Civil Engineer
Maverick Engineering

Structural
Matrix Structural engineers

M/E/P/T
DBR

Landscape Architect
KDC Associates

FIRE STATION #11

CITY OF MIDLAND
6600 BRIARWOOD AVE
MIDLAND, TX 79707

PROJECT No: **MA 18017**
DATE: **16-JAN-2020**

ISSUE

100% DESIGN DEVELOPMENT
22-MAY-2019

75% CONSTRUCTION DOCUMENT
26-JUN-2019

100% ISSUE FOR PERMIT
30-JUL-2019

100% ISSUE FOR APPROVAL TO BID
16-JAN-2020

INTERIOR ELEVATIONS

A603

CEILING PLAN LEGEND

- 10'-6" — CEILING HEIGHT A.F.F. (RE: A901 FOR FULL SCHEDULE)
- 2'X2' LAY-IN ACCOUSTICAL PANELS
- 2'X2' LAY-IN SCRUBBABLE CERAMIC ACCOUSTICAL PANELS
- 5/8" TYPE X GYPSUM BOARD OR 1/2" HIGHT STRENGTH CEILING BOARD
- PRE-FINISHED ALUMINUM CANOPY
- SUSPENDED CEILING CANOPY
- PRE-FIN. ALUMINUM SUN-SHADE AWNING
- LIGHT FIXTURES (RE: ELECTRICAL)

GENERAL CEILING PLAN NOTES

A. SEE SHEET A901 FOR ROOM FINISH SCHEDULE.
B. SEE SHEET A204 FOR PARTITION TYPES.
C. ALL CEILING SHALL BE 9'-0" A.F.F. UNLESS NOTED OTHERWISE
D. REFERENCE MEP FOR ELEC. FIXTURES AND MECH. EQUIPMENT. COORDINATE WITH ARCH. ALL DISCREPANCIES PRIOR TO INSTALLATION.
E. FRAME GYP. BD. FURRDOWNS w/ 3-5/8" MTL. STUDS @ 16" O.C., BRACED TO WALL AND ROOF STRUCTURE.
F. HVLS FAN TO BE INCLUDED IN BASE BID
G. PROVIDE LIGHT-KITS FOR CEILING FANS IN DORMS

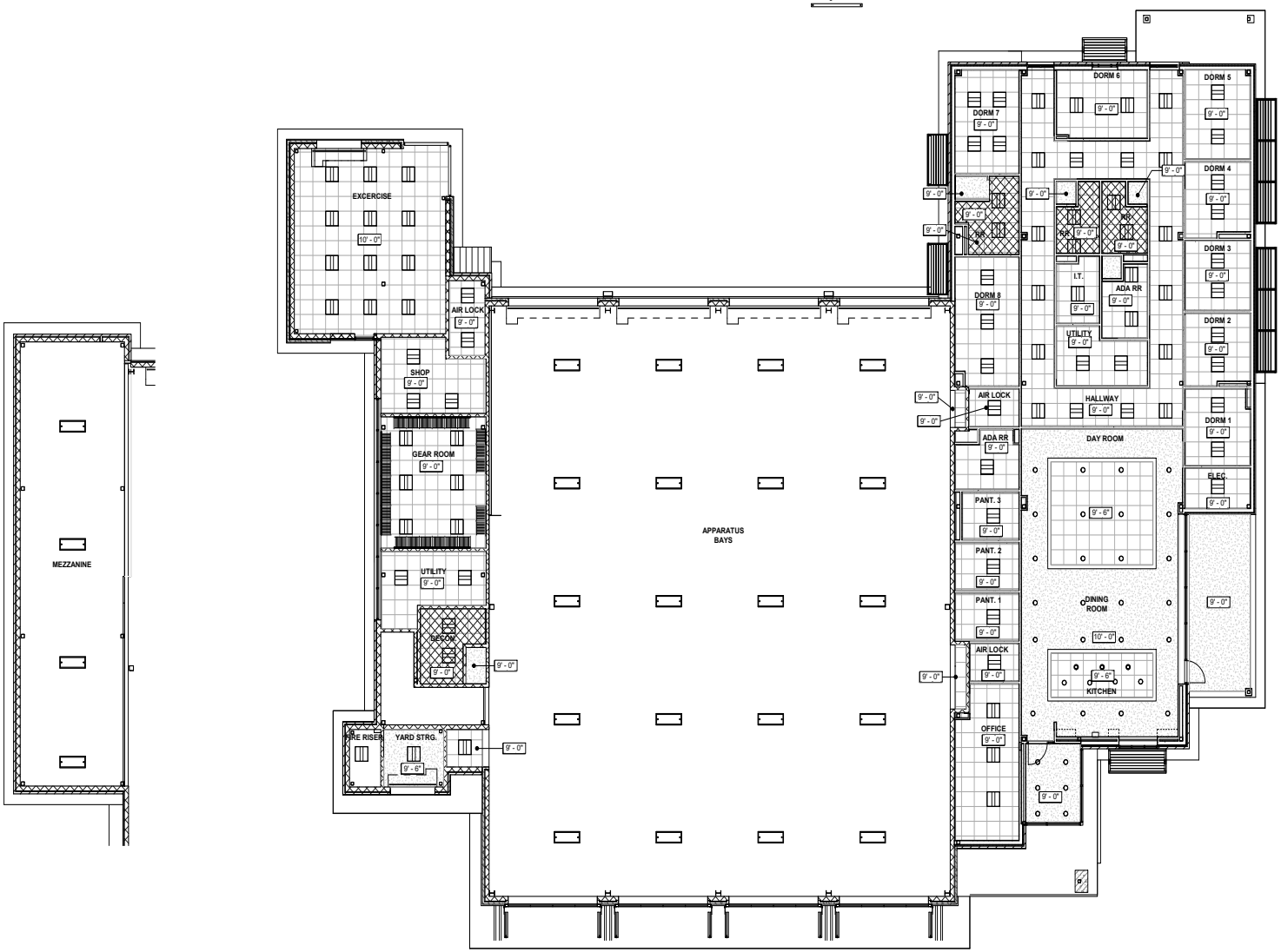

1 MEZZANINE REFLECTED CEILING PLAN
SCALE: 1/8" = 1'-0"

2 LEVEL 1 REFLECTED CEILING PLAN
SCALE: 1/8" = 1'-0"

TRUE NORTH N

PROJECT NORTH N

4.1392

PROFESSIONAL SEAL

REGISTERED ARCHITECT JUSTIN E. MYERS 24640 STATE OF TEXAS

LOGO/CONTACT

martinez ARCHITECTS

Martinez Architect, LP
900 Rockmead, Suite 250
Houston, Texas 77339
281.346.7371

DESIGN TEAM

Architectural
Martinez Architects

Civil Engineer
Maverick Engineering

Structural
Matrix Structural engineers

M/E/P/T
DBR

Landscape Architect
KDC Associates

FIRE STATION #11

CITY OF MIDLAND
6600 BRIARWOOD AVE
MIDLAND, TX 79707

PROJECT No: MA 18017
DATE: 16-JAN-2020

ISSUE

100% DESIGN DEVELOPMENT 22-MAY-2019
75% CONSTRUCTION DOCUMENT 26-JUN-2019
100% ISSUE FOR PERMIT 30-JUL-2019
100% ISSUE FOR APPROVAL TO BID 16-JAN-2020

LEVEL 1 REFLECTED CEILING PLAN - FIRE STATION

A701

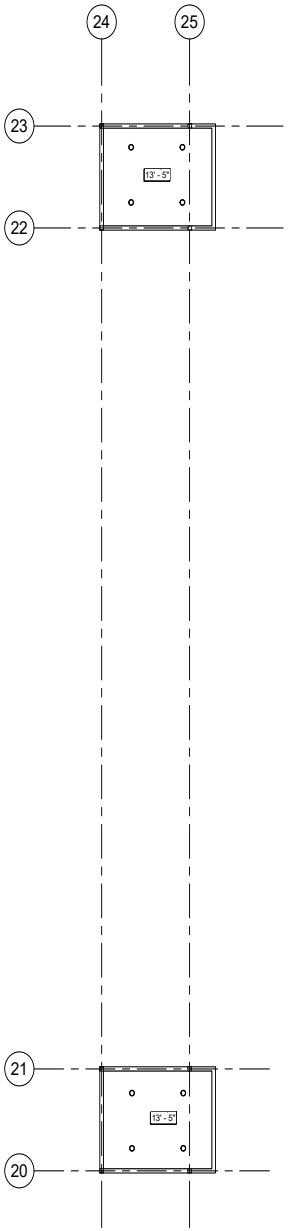

1 LEVEL 1 RCP - ADD ALTERNATE #1
SCALE: 1/8" = 1'-0"

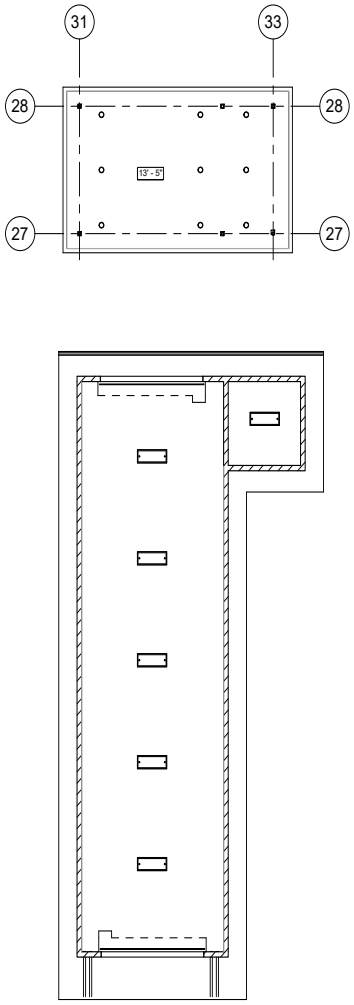

2 LEVEL 1 RCP - ADD ALTERNATE #2
SCALE: 1/8" = 1'-0"

CEILING PLAN LEGEND

- 10'-6" — CEILING HEIGHT A.F.F. (RE: A901 FOR FULL SCHEDULE)
- 2'X2' LAY-IN ACCOUSTICAL PANELS
- 2'X2' LAY-IN SCRUBBABLE CERAMIC ACCOUSTICAL PANELS
- 5/8" TYPE X GYPSUM BOARD OR 1/2" HIGHT STRENGTH CEILING BOARD
- PRE-FINISHED ALUMINUM CANOPY
- SUSPENDED CEILING CANOPY
- PRE-FIN. ALUMINUM SUN-SHADE AWNING
- LIGHT FIXTURES (RE: ELECTRICAL)

GENERAL CEILING PLAN NOTES

A. SEE SHEET A901 FOR ROOM FINISH SCHEDULE.
B. SEE SHEET A204 FOR PARTITION TYPES.
C. ALL CEILING SHALL BE 9'-0" A.F.F. UNLESS NOTED OTHERWISE
D. REFERENCE MEP FOR ELEC. FIXTURES AND MECH. EQUIPMENT. COORDINATE WITH ARCH. ALL DISCREPANCIES PRIOR TO INSTALLATION.
E. FRAME GYP. BD. FURRDOWNS w/ 3-5/8" MTL. STUDS @ 16" O.C., BRACED TO WALL AND ROOF STRUCTURE.
F. HVLS FAN TO BE INCLUDED IN BASE BID
G. PROVIDE LIGHT-KITS FOR CEILING FANS IN DORMS

TRUE NORTH N
PROJECT NORTH N

4.1393

PROFESSIONAL SEAL

REGISTERED ARCHITECT JUSTIN E. MYERS 24640 STATE OF TEXAS

LOGO/CONTACT

martinez ARCHITECTS

Martinez Architect, LP
900 Rockmead, Suite 250
Houston, Texas 77339
281.346.7371

DESIGN TEAM

Architectural
Martinez Architects

Civil Engineer
Maverick Engineering

Structural
Matrix Structural engineers

M/E/P/T
DBR

Landscape Architect
KDC Associates

FIRE STATION #11

CITY OF MIDLAND
6600 BRIARWOOD AVE
MIDLAND, TX 79707

PROJECT No: **MA 18017**
DATE: **16-JAN-2020**

ISSUE

100% DESIGN DEVELOPMENT 22-MAY-2019
75% CONSTRUCTION DOCUMENT 26-JUN-2019
100% ISSUE FOR PERMIT 30-JUL-2019
100% ISSUE FOR APPROVAL TO BID 16-JAN-2020

LEVEL 1 REFLECTED CEILING PLAN - BID ALTERNATES #1 & #2

A702

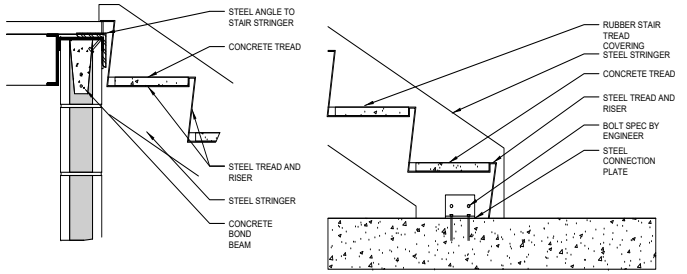

20 STAIR TOP CONNECTION
SCALE: 1 1/2" = 1'-0"

16 STAIR BASE CONNECTION
SCALE: 1 1/2" = 1'-0"

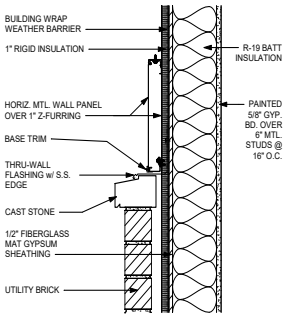

12 CAST STONE LINTEL DTL.
SCALE: 1 1/2" = 1'-0"

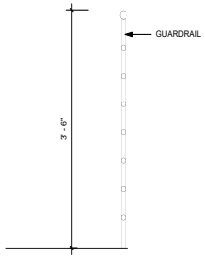

8 GUARD RAIL
SCALE: 1" = 1'-0"

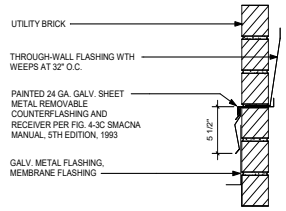

4 WALL FLASHING DTL.
SCALE: 1 1/2" = 1'-0"

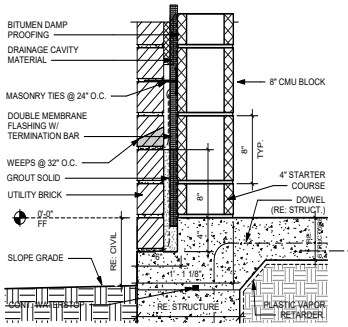

19 LEDGE: BRICK @ CMU
SCALE: 1 1/2" = 1'-0"

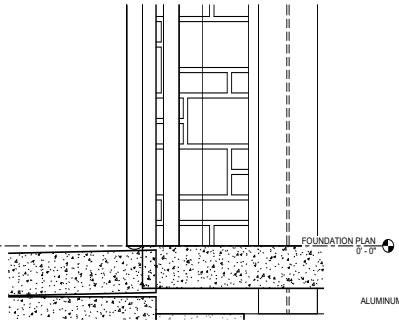

15 BI-FOLD DOOR SILL DTL
SCALE: 1 1/2" = 1'-0"

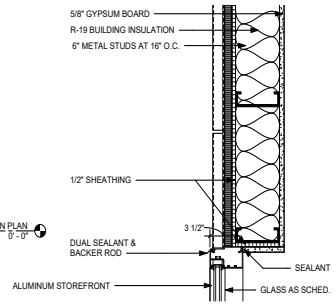

11 WINDOW HEAD DTL.
SCALE: 1 1/2" = 1'-0"

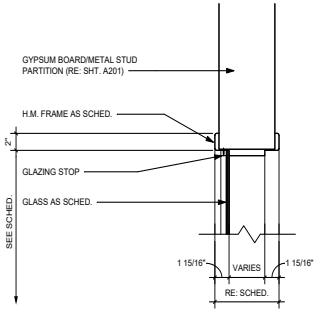

7 INT. DOOR JAMB DTL.
SCALE: 1 1/2" = 1'-0"

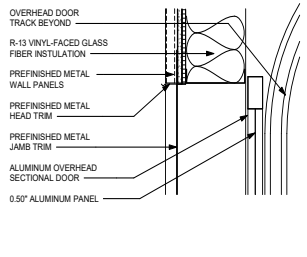

3 OVERHEAD DOOR HEAD DTL.
SCALE: 1 1/2" = 1'-0"

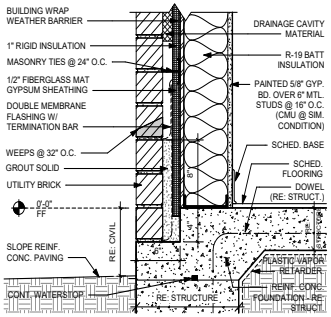

18 LEDGE: BRICK @ MTL. STUDS
SCALE: 1 1/2" = 1'-0"

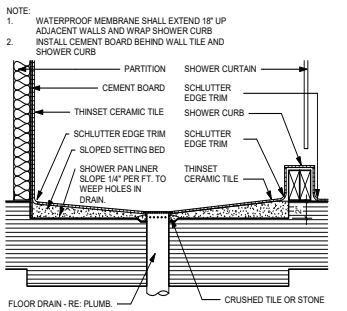

14 SHOWER CURB
SCALE: 1 1/2" = 1'-0"

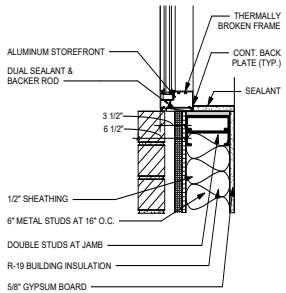

10 WINDOW JAMB DTL.
SCALE: 1 1/2" = 1'-0"

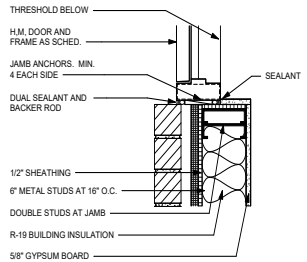

6 DOOR JAMB DTL.
SCALE: 1 1/2" = 1'-0"

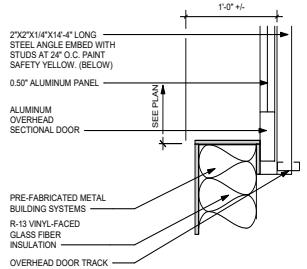

2 DOOR JAMB DTL.
SCALE: 1 1/2" = 1'-0"

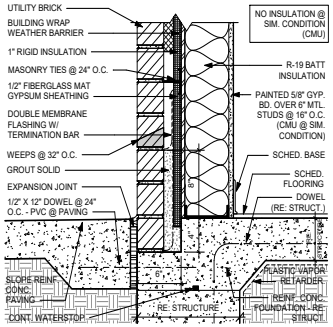

17 BRICK @ ADJ. EXT. CONCRETE
SCALE: 1 1/2" = 1'-0"

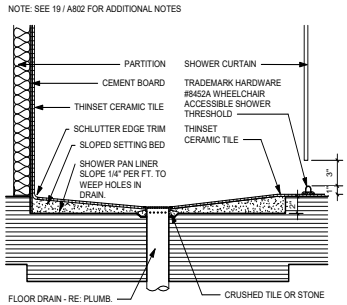

13 ADA SHOWER CURB
SCALE: 1 1/2" = 1'-0"

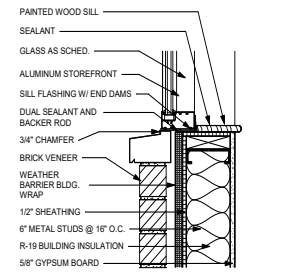

9 WINDOW SILL @ BRICK VENEER
SCALE: 1 1/2" = 1'-0"

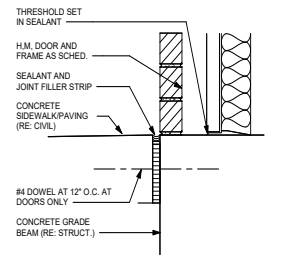

5 DOOR SILL DTL.
SCALE: 1 1/2" = 1'-0"

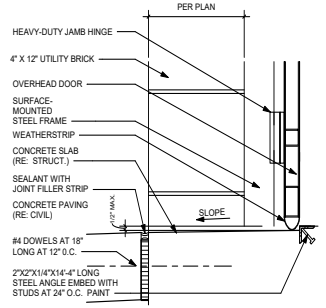

1 OVERHEAD DOOR SILL DTL.
SCALE: 1 1/2" = 1'-0"

4.1394

PROFESSIONAL SEAL

REGISTERED ARCHITECT JUSTIN E. MYERS 24640 STATE OF TEXAS

LOGO/CONTACT

martinez ARCHITECTS

Martinez Architect, LP
900 Rockmead, Suite 250
Houston, Texas 77339
281.346.7371

DESIGN TEAM

Architectural
Martinez Architects

Civil Engineer
Maverick Engineering

Structural
Matrix Structural engineers

M/E/P/T
DBR

Landscape Architect
KDC Associates

FIRE STATION #11

CITY OF MIDLAND
6600 BRIARWOOD AVE
MIDLAND, TX 79707

PROJECT No: **MA 18017**
DATE: **16-JAN-2020**

ISSUE

100% DESIGN DEVELOPMENT 22-MAY-2019
75% CONSTRUCTION DOCUMENT 26-JUN-2019
100% ISSUE FOR PERMIT 30-JUL-2019
100% ISSUE FOR APPROVAL TO BID 16-JAN-2020

EXTERIOR DETAILS

A801

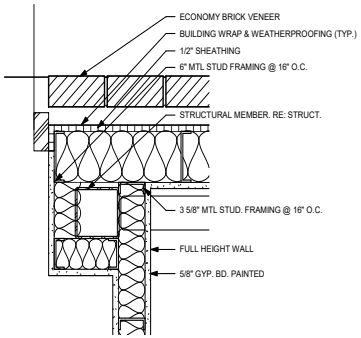

5 Detail 3
SCALE: 1 1/2" = 1'-0"

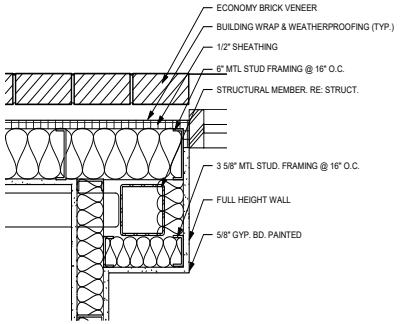

6 Detail 4
SCALE: 1 1/2" = 1'-0"

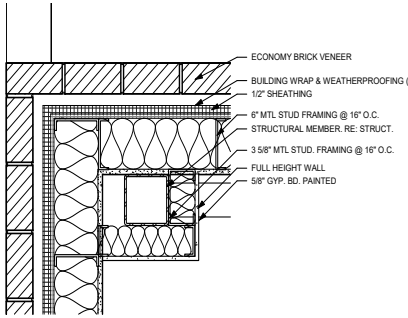

7 Detail 5
SCALE: 1 1/2" = 1'-0"

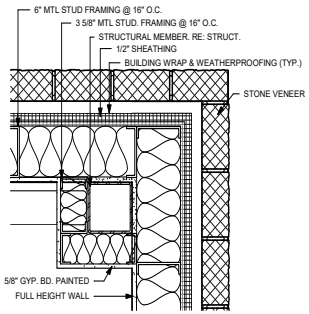

4 Detail 2
SCALE: 1 1/2" = 1'-0"

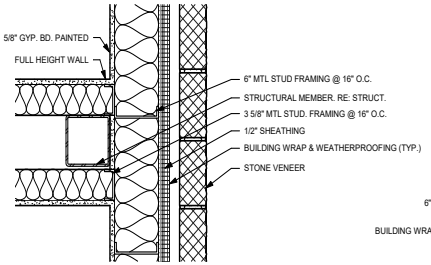

3 Detail 1
SCALE: 1 1/2" = 1'-0"

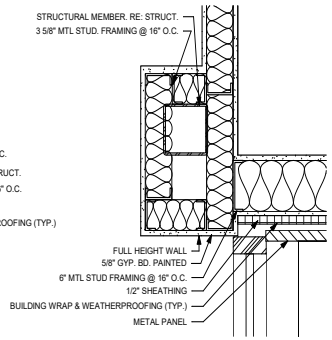

2 Detail 0
SCALE: 1 1/2" = 1'-0"

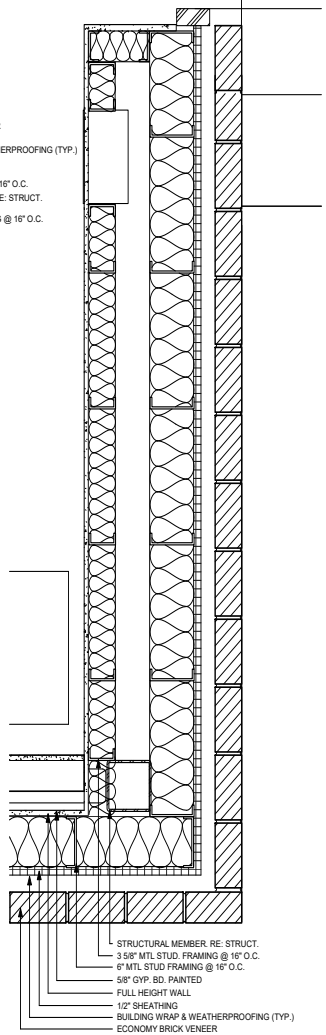

1 Detail 9
SCALE: 1 1/2" = 1'-0"

4.1395

PROFESSIONAL SEAL

REGISTERED ARCHITECT
JUSTIN E. MYERS
24640
STATE OF TEXAS

LOGO/CONTACT

martinez ARCHITECTS

Martinez Architect, LP
900 Rockmead, Suite 250
Houston, Texas 77339
281.346.7371

DESIGN TEAM

Architectural
Martinez Architects

Civil Engineer
Maverick Engineering

Structural
Matrix Structural engineers

M/E/P/T
DBR

Landscape Architect
KDC Associates

FIRE STATION #11

CITY OF MIDLAND
6600 BRIARWOOD AVE
MIDLAND, TX 79707

PROJECT No: **MA 18017**
DATE: **16-JAN-2020**

ISSUE

100% DESIGN DEVELOPMENT	22-MAY-2019
75% CONSTRUCTION DOCUMENT	26-JUN-2019
100% ISSUE FOR PERMIT	30-JUL-2019
100% ISSUE FOR APPROVAL TO BID	16-JAN-2020

PLAN DETAILS

A803

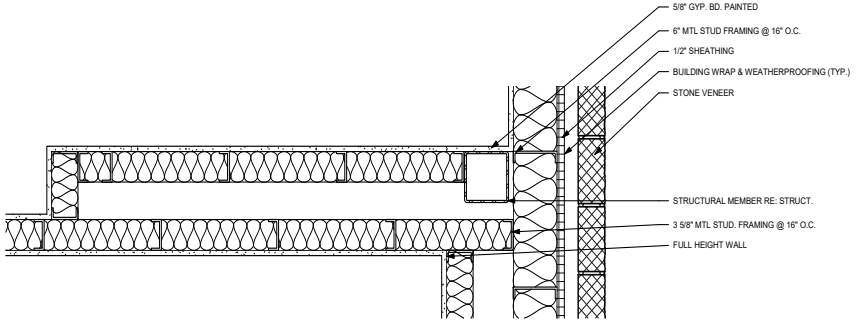

8 Detail 14
SCALE: 1 1/2" = 1'-0"

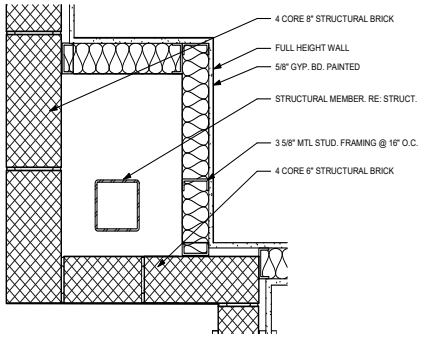

9 Detail 15
SCALE: 1 1/2" = 1'-0"

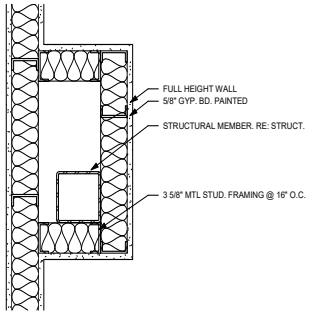

4 Detail 10
SCALE: 1 1/2" = 1'-0"

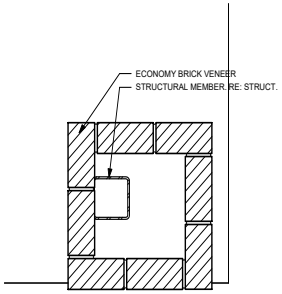

5 Detail 11
SCALE: 1 1/2" = 1'-0"

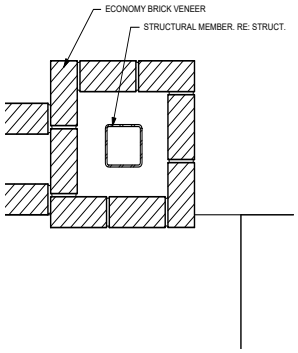

6 Detail 12
SCALE: 1 1/2" = 1'-0"

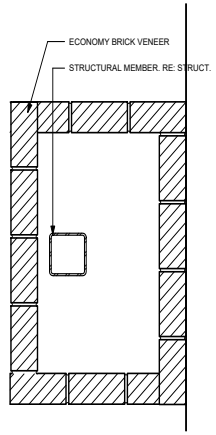

7 Detail 13
SCALE: 1 1/2" = 1'-0"

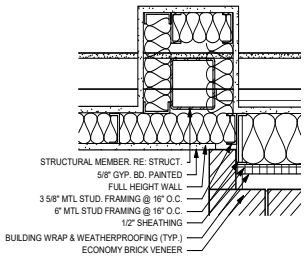

3 Detail 8
SCALE: 1 1/2" = 1'-0"

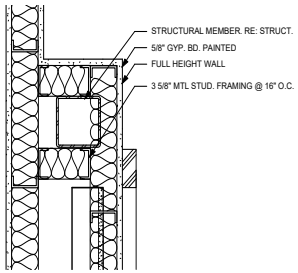

2 Detail 7
SCALE: 1 1/2" = 1'-0"

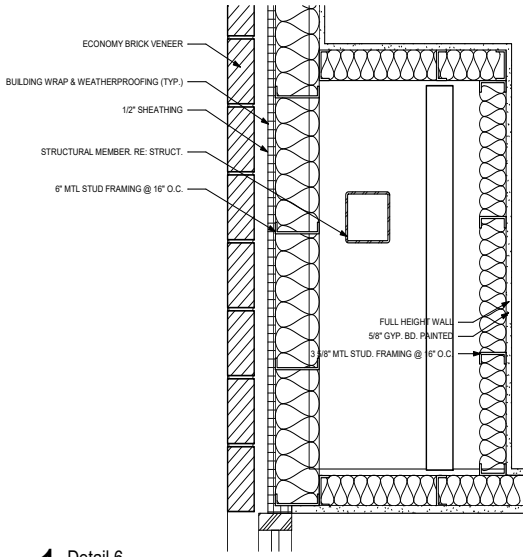

1 Detail 6
SCALE: 1 1/2" = 1'-0"

4.1396

PROFESSIONAL SEAL

REGISTERED ARCHITECT JUSTIN E. MYERS 24640 STATE OF TEXAS

LOGO/CONTACT

martinez ARCHITECTS

Martinez Architect, LP
900 Rockmead, Suite 250
Houston, Texas 77339
281.346.7371

DESIGN TEAM

Architectural
Martinez Architects

Civil Engineer
Maverick Engineering

Structural
Matrix Structural engineers

M/E/P/T
DBR

Landscape Architect
KDC Associates

FIRE STATION #11

CITY OF MIDLAND
6600 BRIARWOOD AVE
MIDLAND, TX 79707

PROJECT No: **MA 18017**
DATE: **16-JAN-2020**

ISSUE

100% DESIGN DEVELOPMENT
22-MAY-2019

75% CONSTRUCTION DOCUMENT
26-JUN-2019

100% ISSUE FOR PERMIT
30-JUL-2019

100% ISSUE FOR APPROVAL TO BID
16-JAN-2020

PLAN DETAILS

A804

NOTE:
ALL CABINET DOORS AND DRAWER FACES SHALL BE PLASTIC LAMINATE OVER SOLID WOOD. ALL OTHER PANELS OF CABINET CONSTRUCTION SHALL BE PLASTIC LAMINATE OVER PLYWOOD

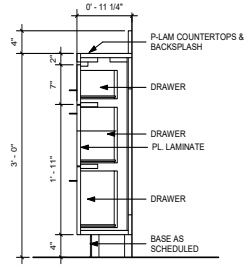

14 BASE CABINET W/ DRAWERS - SKINY
SCALE: 1" = 1'-0"

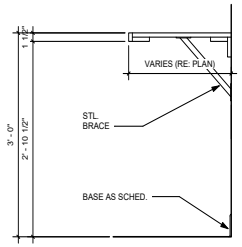

11 SHOP WORK SURFACE
SCALE: 1" = 1'-0"

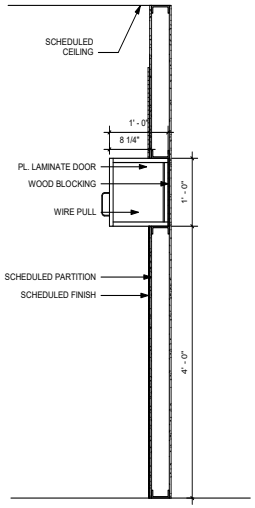

8 BATHROOM 127 CABINETS
SCALE: 1" = 1'-0"

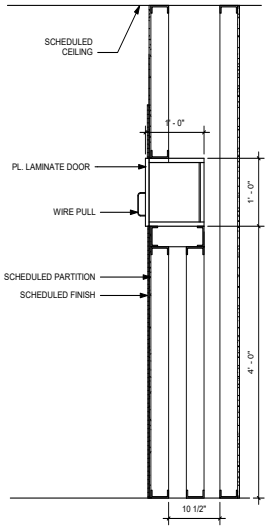

6 BATHROOM CABINETS - RECESSED
SCALE: 1" = 1'-0"

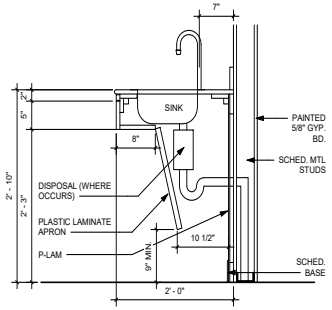

4 SINK W/ SLOPED BASE
SCALE: 1" = 1'-0"

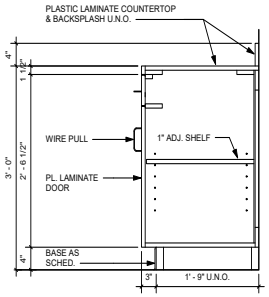

13 BASE CABINETS AT SINK
SCALE: 1" = 1'-0"

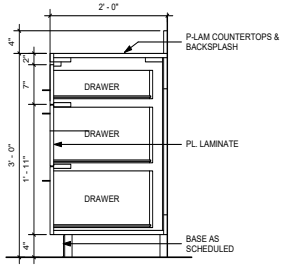

10 BASE CABINET W/ DRAWERS
SCALE: 1" = 1'-0"

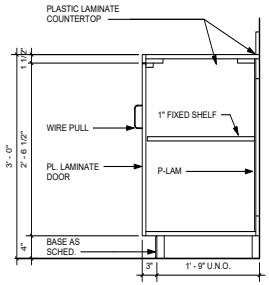

3 BASE CABINET @ RR 126
SCALE: 1" = 1'-0"

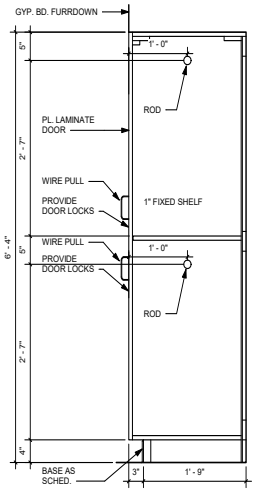

12 WARDROBE LOCKER
SCALE: 1" = 1'-0"

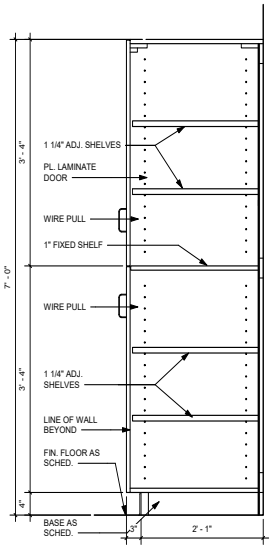

9 MEDICAL CABINET
SCALE: 1" = 1'-0"

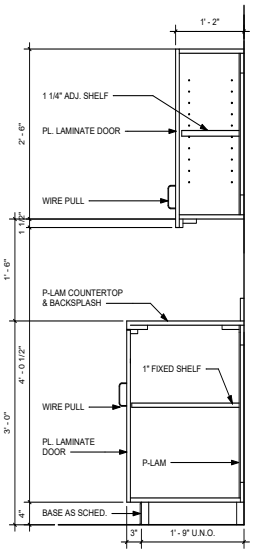

7 UPPER/LOWER CABINETS
SCALE: 1" = 1'-0"

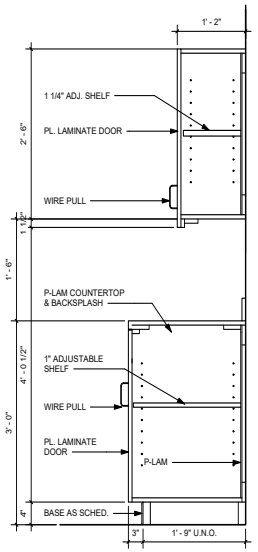

5 SHOP UPPER/LOWER CABINETS
SCALE: 1" = 1'-0"

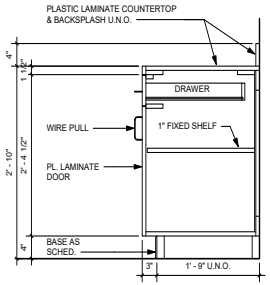

2 BASE CABINETS
SCALE: 1" = 1'-0"

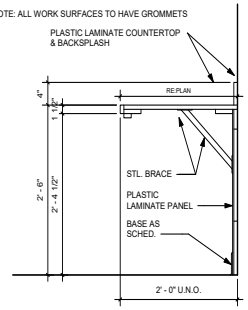

1 WORK SPACE
SCALE: 1" = 1'-0"

4.1397

PROFESSIONAL SEAL

REGISTERED ARCHITECT JUSTIN E. MYERS 24640 STATE OF TEXAS

LOGO/CONTACT

martinez ARCHITECTS

Martinez Architect, LP
900 Rockmead, Suite 250
Houston, Texas 77339
281.346.7371

DESIGN TEAM

Architectural
Martinez Architects

Civil Engineer
Maverick Engineering

Structural
Matrix Structural engineers

M/E/P/T
DBR

Landscape Architect
KDC Associates

FIRE STATION #11

CITY OF MIDLAND
6600 BRIARWOOD AVE
MIDLAND, TX 79707

PROJECT No: **MA 18017**
DATE: **16-JAN-2020**

ISSUE
100% DESIGN DEVELOPMENT 22-MAY-2019
75% CONSTRUCTION DOCUMENT 26-JUN-2019
100% ISSUE FOR PERMIT 30-JUL-2019
100% ISSUE FOR APPROVAL TO BID 16-JAN-2020

MILLWORK DETAILS

A805

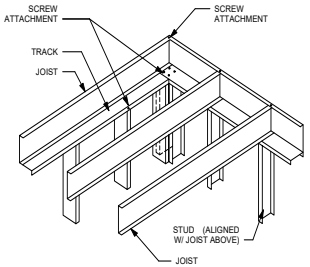

4 TYPICAL FLOOR FRAMING
SCALE: 1 1/2" = 1'-0"

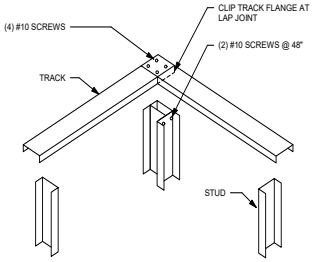

3 FRAMING @ CORNER
SCALE: 1 1/2" = 1'-0"

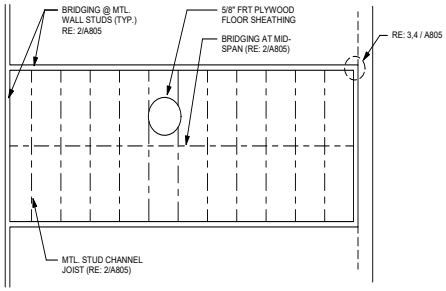

2 STRUCTURAL STUD & PLYWOOD MEZZANINE
SCALE: 1 1/2" = 1'-0"

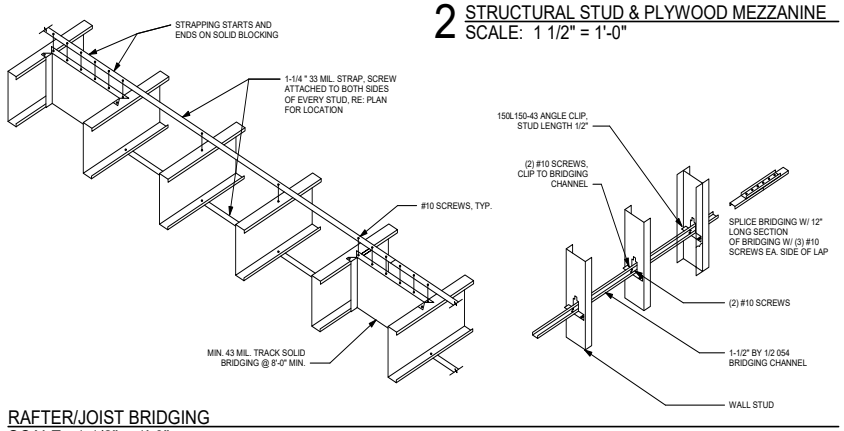

1 RAFTER/JOIST BRIDGING
SCALE: 1 1/2" = 1'-0"

PROFESSIONAL SEAL

REGISTERED ARCHITECT JUSTIN E. MYERS 24640 STATE OF TEXAS

LOGO/CONTACT

martinez ARCHITECTS

Martinez Architect, LP
900 Rockmead, Suite 250
Houston, Texas 77339
281.346.7371

DESIGN TEAM

Architectural
Martinez Architects

Civil Engineer
Maverick Engineering

Structural
Matrix Structural engineers

M/E/P/T
DBR

Landscape Architect
KDC Associates

FIRE STATION #11
CITY OF MIDLAND
6600 BRIARWOOD AVE
MIDLAND, TX 79707

PROJECT No: **MA 18017**
DATE: **16-JAN-2020**

ISSUE

100% DESIGN DEVELOPMENT 22-MAY-2019
75% CONSTRUCTION DOCUMENT 26-JUN-2019
100% ISSUE FOR PERMIT 30-JUL-2019
100% ISSUE FOR APPROVAL TO BID 16-JAN-2020

MEZZANINE FRAMING DETAILS

A806

4.1398

FINISH SCHEDULE - BASE BID

#	ROOM NAME	FLOOR: ABRASION & SLIP RESISTANT CONCRETE FLOOR FINISH	FLOOR: PORCELAIN TILE - 1	FLOOR: PORCELAIN TILE - 2	FLOOR: LUXURY VINYL TILE - 02	FLOOR: LUXURY VINYL TILE - 01	FLOOR: SEALED CONCRETE	FLOOR: RUBBER ATHLETIC FLOORING	BASE: VULCANIZED RUBBER COVER BASE	BASE: NOT USED	BASE: PORCALAIN TILE COVE BASE	WALL: PAINT ON GYP. BD (FIELD COLOR)	WALL: PAINT ON GYP. BD. (ACCENT COLOR)	WALL: PAINT ON WATER RESISTANT FIRE RATED PLYWOOD	WALL: PORCELAIN WALL TILE (FIELD)	WALL: PORCELAIN MOSAIC WALL TILE (ACCENT)	WALL: FIBER-REINFORCED PLASTIC	WALL: PAINT ON CMU (FIELD COLOR)	CEILING FINISH: TEGULAR EDGED LAY-IN ACOUSTICAL PANEL (WHITE)	CEILING FINISH: SQUARE EDGED LAY-IN SCRUBBABLE CERAMIC ACOUSTICAL PANEL (WHITE)	CEILING FINISH: PAINTED GYPSUM BOARD	CEILING FINISH: PAINTED EXPOSED STRUCTURE & MEP	HEIGHT	FINISH REMARKS
101	ENTRY					•			•			•							•				10' - 0"	
102	OFFICE					•			•			•							•				9' - 0"	
103	AIR LOCK					•			•			•							•				9' - 0"	
104	PANT. 1					•			•			•							•				9' - 0"	
105	PANT. 2					•			•			•							•				9' - 0"	
106	PANT. 3					•			•			•							•				9' - 0"	
107	ADA RR		•								•				•	•			•				9' - 0"	
108	KITCHEN					•			•			•				•					•		10' - 0"	
109	DINING ROOM					•			•			•									•		10' - 0"	
110	PATIO						•														•		10' - 0"	
111	DAY ROOM					•			•			•									•		10' - 0"	
112	ELEC.						•		•					•					•				9' - 0"	
113	AIR LOCK					•			•			•							•				9' - 0"	
114	DORM 8					•			•			•							•				9' - 0"	
115	RR		•								•				•	•				•			9' - 0"	
116	DORM 7					•			•			•							•				9' - 0"	
117	DORM 6					•			•			•							•				9' - 0"	
118	DORM 5					•			•			•							•				9' - 0"	
119	DORM 4					•			•			•							•				9' - 0"	
120	DORM 3					•			•			•							•				9' - 0"	
121	DORM 2					•			•			•							•				9' - 0"	
122	DORM 1					•			•			•							•				9' - 0"	
123	UTILITY					•			•			•							•				9' - 0"	
124	I.T.					•			•					•					•				9' - 0"	
125	RR		•								•				•	•				•			9' - 0"	
126	RR		•								•				•	•				•			9' - 0"	
127	ADA RR		•								•				•	•				•			9' - 0"	
128	HALLWAY					•			•			•							•	•			9' - 0"	
129	APPARATUS BAYS	•																	•				•	20' - 0"	LOWEST POINT OF SLOPED ROOF: 20'-0"
130	YARD STRG.																		•			•		9' - 0"	
131	FIRE RISER								•										•			•		8' - 0"	
132	DECON.	•																	•	•				9' - 0"	
133	UTILITY	•							•										•	•				9' - 0"	
134	GEAR ROOM	•																	•	•				9' - 0"	
135	SHOP	•							•										•	•				9' - 0"	
136	AIR LOCK	•							•			•								•				9' - 0"	
137	EXCERCISE							•											•	•				10' - 0"	
201	MEZZANINE	•																	•				•	8' - 0"	LOWEST POINT OF SLOPED ROOF: 8'-0"

FINISH SCHEDULE - ADD ALTERNATE #2

140	WASH BAY	•																	•				•	10' - 0"	
141	CHEMICAL STORAGE	•																	•				•	10' - 0"	

NOTES

1. All finish material colors/patterns/styles to be determined by architect from manufacturer's full range of colors. All hollow metal door frames shall be painted.
2. RE: Specifications for additional finish information & requirements.
3. All exposed steel framing (interior & exterior) shall be painted.
4. Provide corner guards at all outside gyp. bd. corners
5. All cabinets shall be wood laminated U.N.O.
6. All countertops shall be solid surface U.N.O.
7. RE: A701 for extent and height of ceiling furrdowns / transitions.
8. No wall base at interior masonry walls

PROFESSIONAL SEAL

REGISTERED ARCHITECT JUSTIN E. MYERS 24640 STATE OF TEXAS

LOGO/CONTACT

martinez ARCHITECTS

Martinez Architect, LP
900 Rockmead, Suite 250
Houston, Texas 77339
281.346.7371

DESIGN TEAM

Architectural
Martinez Architects

Civil Engineer
Maverick Engineering

Structural
Matrix Structural engineers

M/E/P/T
DBR

Landscape Architect
KDC Associates

FIRE STATION #11

CITY OF MIDLAND
6600 BRIARWOOD AVE
MIDLAND, TX 79707

PROJECT No: **MA 18017**
DATE: **16-JAN-2020**

ISSUE

100% DESIGN DEVELOPMENT
22-MAY-2019

75% CONSTRUCTION DOCUMENT
26-JUN-2019

100% ISSUE FOR PERMIT
30-JUL-2019

100% ISSUE FOR APPROVAL TO BID
16-JAN-2020

FINISH SCHEDULE

A901

4.1399

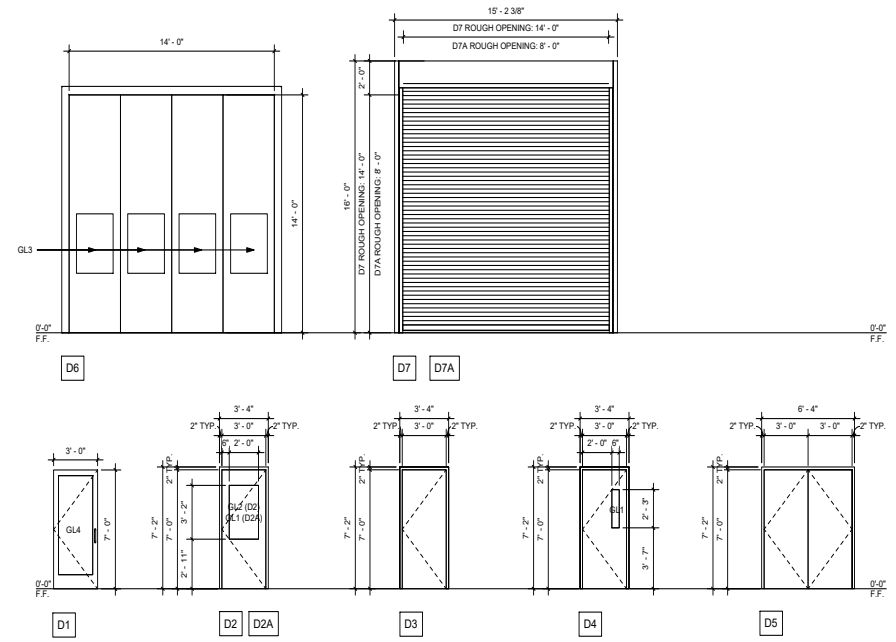

2 DOOR TYPES

GLAZING LEGEND
GL1 - 1/4" CLEAR GLASS (TEMPERED)
GL2 - 1/4" CLEAR GLASS (FIRE RATED)
GL3 - 1" TINTED INSULATED GLASS
GL4 - 1" INSULATED TEMPERED GLASS

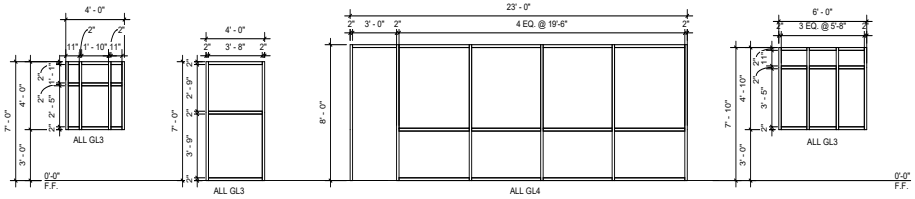

01 FRAME - Aluminum Storefront WALL - Exterior Metal Stud
02 FRAME - Aluminum Storefront WALL - Exterior Metal Stud
10 FRAME - Aluminum Storefront WALL - Exterior Metal Stud
04 FRAME - Aluminum Storefront WALL - Exterior Metal Stud

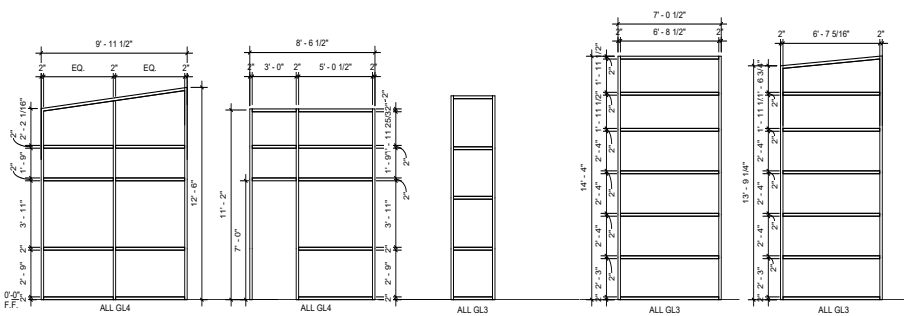

05 FRAME - Aluminum Storefront WALL - Exterior Metal Stud
06 FRAME - Aluminum Storefront WALL - Exterior Metal Stud
FRAME - Aluminum Storefront WALL - Exterior Metal Stud
08 FRAME - Aluminum Storefront WALL - Exterior Metal Stud
09 FRAME - Aluminum Storefront WALL - Exterior Metal Stud

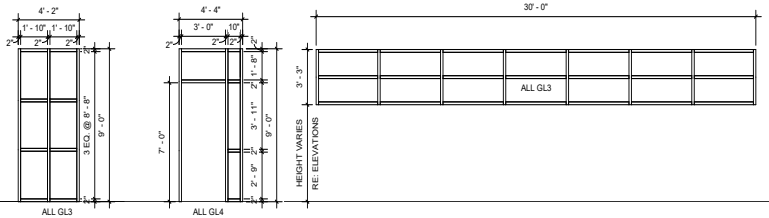

10 FRAME - Aluminum Storefront WALL - Exterior Metal Stud
11 FRAME - Aluminum Storefront WALL - Exterior Metal Stud
12 FRAME - Aluminum Storefront WALL - Exterior Metal Stud

1 WINDOW TYPES

DOOR SCHEDULE - BASE BID

DOOR TAG	FROM ROOM: NAME	TO ROOM: NAME	DOOR TYPE	HARDWARE SET	THICKNESS	DOOR MATERIAL: ALUMINUM	DOOR MATERIAL: HOLLOW METAL (PAINTED)	DOOR MATERIAL: WOOD (P-LAM FACED) WILSONART "HAMPTON WALNUT"	DOOR MATERIAL: STEEL	FRAME MATERIAL: ALUMINUM	FRAME MATERIAL: HOLLOW METAL (PAINTED)	FRAME MATERIAL: STEEL	WALL TYPE ANCHOR: INTERIOR: 3-5/8" MTL STUD W/ 5/8" GYP BD	WALL TYPE ANCHOR: INTERIOR: 3-5/8" MTL STUD W/ 5/8" GYP BD - FIRE RATED	WALL TYPE ANCHOR: INTERIOR: 6" MTL. STUD ON 36" HIGH CMU BASE	WALL TYPE ANCHOR: INTERIOR: 6" STUD W/ GYP BD ONE SIDE & MTL LINES PANEL ONE SIDE, 36" HIGH CMU BASE	WALL TYPE ANCHOR: INTERIOR: 6" CMU	WALL TYPE ANCHOR: INTERIOR: 8" CMU WITH 5/8" GYP. BD. ONE SIDE	WALL TYPE ANCHOR: EXTERIOR: EXTERIOR MTL. STUD	WALL TYPE ANCHOR: EXTERIOR: EXTERIOR CMU	WALL TYPE ANCHOR: EXTERIOR: EXTERIOR STOREFRONT	FIRE RATING	REMARKS
101 A	KITCHEN	ENTRY	D1	711AV	0' - 1 3/4"	•				•			•								•	
101B	EXTERIOR	ENTRY	D1	C715A	0' - 1 3/4"	•				•											•	
102 A	KITCHEN	OFFICE	D2A	103	0' - 1 3/4"			•			•		•									
103 A	AIR LOCK	APPARATUS BAYS	D2	C205	0' - 1 3/4"			•			•							•			20 MIN.	
103 B	KITCHEN	AIR LOCK	D2A	405	0' - 1 3/4"			•			•		•									
104 A	DINING ROOM	PANT. 1	D3	503	0' - 1 3/4"			•			•		•									
105 A	DINING ROOM	PANT. 2	D3	503	0' - 1 3/4"			•			•		•									
106 A	DAY ROOM	PANT. 3	D3	503	0' - 1 3/4"			•			•		•									
107 A	DAY ROOM	ADA RR	D3	301	0' - 1 3/4"			•			•		•									
108 A	PATIO	KITCHEN	D1	D505A	0' - 1 3/4"	•				•											•	
112 A	DAY ROOM	ELEC.	D3	201	0' - 1 3/4"			•			•		•									
113 A	AIR LOCK	APPARATUS BAYS	D2	C205	0' - 1 3/4"			•			•								•		20 MIN.	
113 B	HALLWAY	AIR LOCK	D2A	405	0' - 1 3/4"			•			•		•									
114 A	HALLWAY	DORM 8	D3	303	0' - 1 3/4"			•			•		•									
114 B	RR	DORM 8	D3	303	0' - 1 3/4"			•			•		•									
116 A	HALLWAY	DORM 7	D3	303S	0' - 1 3/4"			•			•		•									
116 B	RR	DORM 7	D3	303	0' - 1 3/4"			•			•		•									
117 A	HALLWAY	DORM 6	D3	303	0' - 1 3/4"			•			•		•									
118 A	HALLWAY	DORM 5	D3	303S	0' - 1 3/4"			•			•		•									
119 A	HALLWAY	DORM 4	D3	303S	0' - 1 3/4"			•			•		•									
120 A	HALLWAY	DORM 3	D3	303S	0' - 1 3/4"			•			•		•									
121 A	HALLWAY	DORM 2	D3	303S	0' - 1 3/4"			•			•		•									
122 A	HALLWAY	DORM 1	D3	303	0' - 1 3/4"			•			•		•									
123 A	UTILITY	HALLWAY	D3	401	0' - 1 3/4"			•			•		•									
124 A	HALLWAY	I.T.	D3	201	0' - 1 3/4"			•			•		•									
125 A	HALLWAY	RR	D3	301	0' - 1 3/4"			•			•		•									
126 A	HALLWAY	RR	D3	301	0' - 1 3/4"			•			•		•									
127 A	HALLWAY	ADA RR	D3	307	0' - 1 3/4"			•			•		•									
128 A	EXTERIOR	HALLWAY	D1	C715A	0' - 1 3/4"	•				•											•	
128 B	HALLWAY	DAY ROOM	D4	403	0' - 1 3/4"			•			•		•									
128 C	DAY ROOM	HALLWAY	D4	403	0' - 1 3/4"			•			•		•									
129 A		APPARATUS BAYS	D7	001					•			•								•		
129 B		APPARATUS BAYS	D7	001					•			•								•		
129 C		APPARATUS BAYS	D7	001					•			•								•		
129 D		APPARATUS BAYS	D7	001					•			•								•		
129 E	APPARATUS BAYS	EXTERIOR	D6	002					•			•								•		
129 F	APPARATUS BAYS	EXTERIOR	D6	002					•			•								•		
129 G	APPARATUS BAYS	EXTERIOR	D6	002					•			•								•		
129 H	APPARATUS BAYS	EXTERIOR	D6	002					•			•								•		
129 J	APPARATUS BAYS	EXTERIOR	D4	D715	0' - 1 3/4"		•				•										•	
130 A	EXTERIOR	YARD STRG.	D7A	001					•			•								•		
131 A	FIRE RISER	EXTERIOR	D3	D205	0' - 1 3/4"		•				•										•	
132 A	DECON.	APPARATUS BAYS	D3	301	0' - 1 3/4"			•			•							•				
133 A	UTILITY	APPARATUS BAYS	D3	401	0' - 1 3/4"			•			•							•				
135 A	APPARATUS BAYS	SHOP	D3	501	0' - 1 3/4"			•			•							•				
136 A	APPARATUS BAYS	AIR LOCK	D2A	735	0' - 1 3/4"			•			•							•				
136 B	AIR LOCK	EXTERIOR	D4	C715	0' - 1 3/4"		•				•										•	
137 A	AIR LOCK	EXCERCISE	D2	509I	0' - 1 3/4"			•			•							•			20 MIN.	
137 B	EXTERIOR	EXCERCISE	D7A	001					•			•								•		

NOTES
1. All hollow metal door frames will be painted.
2. Re: Sheet A801 & A802 for door & window details.
3. Re: Spec. for door hardware.
4. Re: Hardware Spec. for Door Swing information
5. All interior wood doors to receive plastic laminate finish U.N.O.
6. All exterior doors to be flush doors.
7. G.C. to coordinate the installation of proximity devices. All areas shown to be roughed in with electrical as part of base bid. Coordinate requirements with proximity device vendor.
8. Storefront doors to be wide style door to accommodate panic device installation. Coordinate with contractor prior to fabrication.
9. All doors shall have thickness of 1-3/4" U.N.O.

DOOR SCHEDULE - ADD ALTERNATE #2

140 A			D7	001					•			•								•		
140 B	EXTERIOR	EXTERIOR	D4	505	0' - 1 3/4"		•				•										•	
140 C			D7	001					•			•								•		

PROFESSIONAL SEAL
REGISTERED ARCHITECT JUSTIN E. MYERS 24640 STATE OF TEXAS

LOGO/CONTACT

martinez ARCHITECTS

Martinez Architect, LP
900 Rockmead, Suite 250
Houston, Texas 77339
281.346.7371

DESIGN TEAM

Architectural
Martinez Architects

Civil Engineer
Maverick Engineering

Structural
Matrix Structural engineers

M/E/P/T
DBR

Landscape Architect
KDC Associates

FIRE STATION #11
CITY OF MIDLAND
6600 BRIARWOOD AVE
MIDLAND, TX 79707

PROJECT No: **MA 18017**
DATE: **16-JAN-2020**

ISSUE
100% DESIGN DEVELOPMENT 22-MAY-2019
75% CONSTRUCTION DOCUMENT 26-JUN-2019
100% ISSUE FOR PERMIT 30-JUL-2019
100% ISSUE FOR APPROVAL TO BID 16-JAN-2020

DOOR AND WINDOW SCHEDULE

A902

4.1400

NOTES:
TILE FLOOR FINISHES TO BE INSTALLED TO ROOM EXTENT (UNDER MILLWORK)

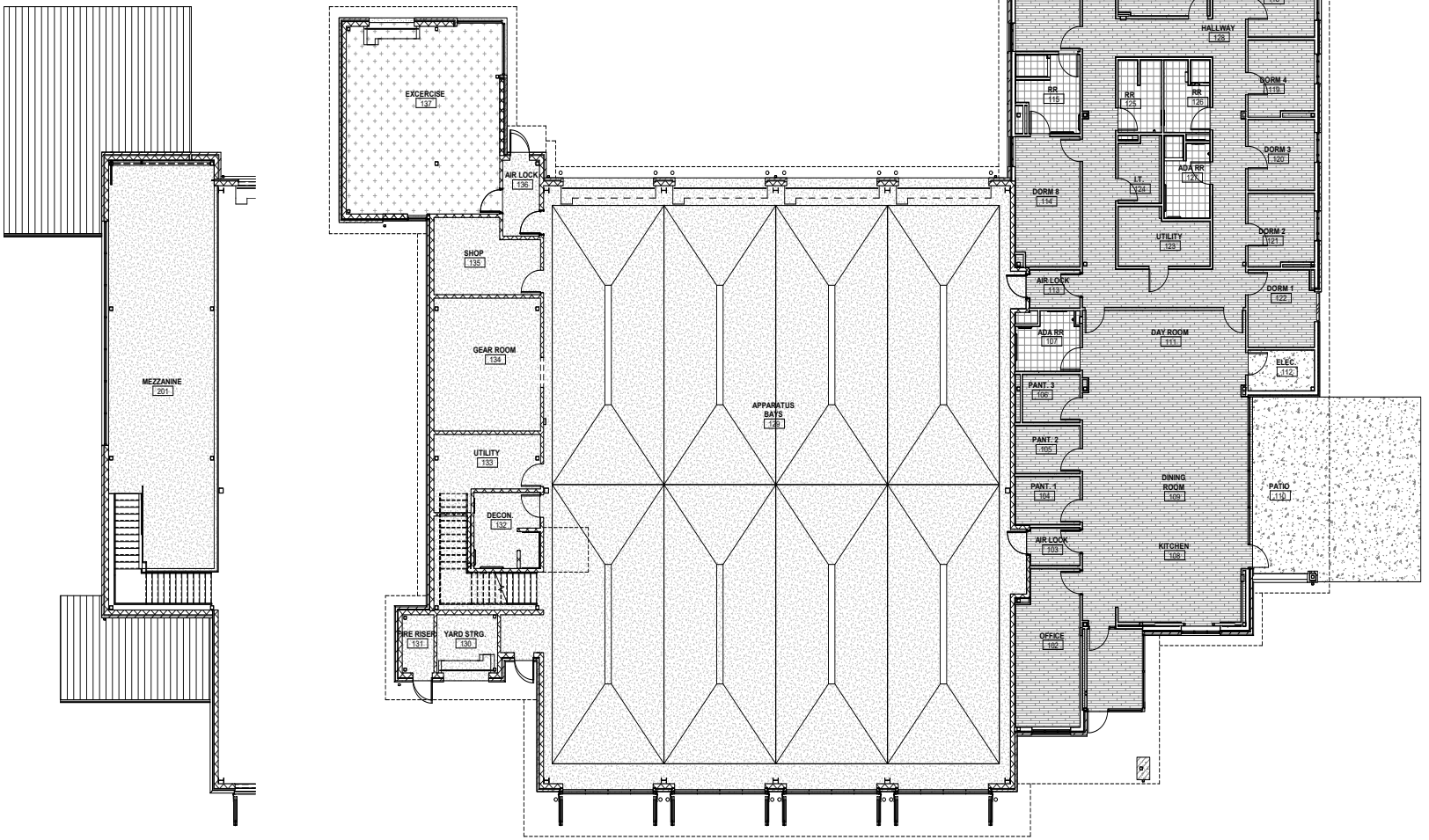

FLOOR FINISH LEGEND

LVT-01	PORCELAIN TILE - 1	SEALED CONCRETE (SC-1)
RUBBER ATHLETIC FLOORING	PORCELAIN TILE (FT-2)	ABRASION & SLIP RESISTANT CONCRETE

TRUE NORTH PROJECT NORTH

2 MEZZANINE - FINISH PLAN
SCALE: 1/8" = 1'-0"

1 LEVEL 1 - FINISH PLAN
SCALE: 1/8" = 1'-0"

PROFESSIONAL SEAL

REGISTERED ARCHITECT JUSTIN E. MYERS 24640 STATE OF TEXAS

LOGO/CONTACT

martinez ARCHITECTS

Martinez Architect, LP
900 Rockmead, Suite 250
Houston, Texas 77339
281.346.7371

DESIGN TEAM

Architectural
Martinez Architects

Civil Engineer
Maverick Engineering

Structural
Matrix Structural engineers

M/E/P/T
DBR

Landscape Architect
KDC Associates

FIRE STATION #11

CITY OF MIDLAND
6600 BRIARWOOD AVE
MIDLAND, TX 79707

PROJECT No: MA 18017
DATE: 16-JAN-2020

ISSUE

100% DESIGN DEVELOPMENT
22-MAY-2019

75% CONSTRUCTION DOCUMENT
26-JUN-2019

100% ISSUE FOR PERMIT
30-JUL-2019

100% ISSUE FOR APPROVAL TO BID
16-JAN-2020

LEVEL 1 FINISH PLAN

A903

4.1401

PROJECT SIGN NOTES:

1. CONTRACTOR SHALL VERIFY SITE MOUNTING LOCATION WITH ARCHITECT.
2. SIGN TO BE 3/16" PLYWOOD ON 4x CONSTRUCTION. FOOTINGS TO BE 12" x 3'-0" CONCRETE.
3. COLORS:
   GRAY BACKGROUND --
   RGB COLOR 215,215,215 (PANTONE COOL GRAY 1C)

   BLACK LETTERS --
   RGB COLOR 60,60,60 (PANTONE BLACK 7C)

   BLACK 1" BORDER AT PERIMETER & 1/2" INTERIOR LINES --
   RGB COLOR 60,60,60 (PANTONE BLACK 7C)
4. TEXT TYPE - ARIAL BALTIC

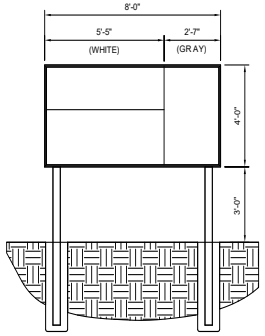

10 PROJECT SIGN
SCALE: 3/8" = 1'-0"

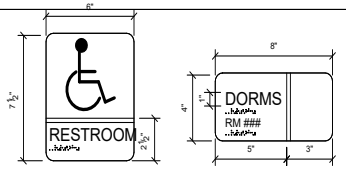

9 SIGNAGE
SCALE: 3" = 1'-0"

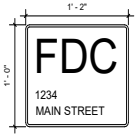

FIRE DEPARTMENT CONNECTION SIGN:

1. FIRE DEPARTMENT CONNECTION SHALL BE INSTALLED WITHIN 150' OF FIRE HYDRANT AND INSTALLED CLEARLY VISIBLE FROM A PUBLIC ACCESS STREET
2. SIGN PLATE SHALL BE MADE OF RUST-FREE ALUMINUM WITH UV RESISTANT, TWO-SIDED POLYESTER COATING.
3. THE SIGN PLATE SHALL BE A MINIMUM OF 12"x14" WITH A THICKNESS OF 0.40".
4. FDC LETTERING TO BE 6" HIGH
5. ADDRESS LETTERING TO BE 1.25" HIGH

3 FIRE PROTECTION LAYOUT AND IDENTIFICATION
SCALE: 1 1/2" = 1'-0"

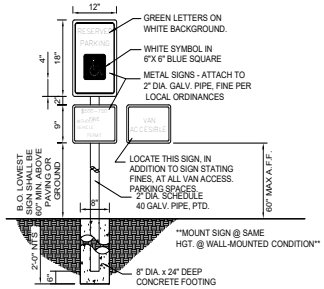

6 HANDICAP SIGNAGE
SCALE: 3/4" = 1'-0"

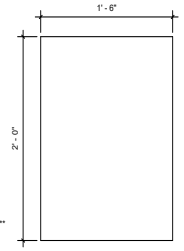

4 DEDICATION PLAQUE
SCALE: 1 1/2" = 1'-0"

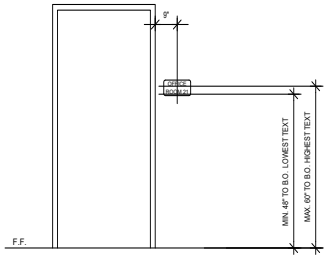

2 SIGNAGE TEXT HEIGHT
SCALE: 1/2" = 1'-0"

SIGNAGE SCHEDULE - BASE BID

ROOM #	ROOM NAME	SIGN TYPE	SIGN LOCATION	ROOM # ON SIGN	SIGN REMARKS
101	ENTRY	-	-	-	
102	OFFICE	S1	A/102	101	
103	AIR LOCK	-	-	-	
104	PANT. 1	S1	A/104	102	
105	PANT. 2	S1	A/105	103	
106	PANT. 3	S1	A/106	104	
107	ADA RR	S2	A/107	105	
108	KITCHEN	-	-	-	
109	DINING ROOM	-	-	-	
110	PATIO				
111	DAY ROOM	-	-	-	
112	ELEC.	S1	A/112	106	
113	AIR LOCK	-	-	-	
114	DORM 8	S1	A/114	118	
115	RR	S1	A/114, B/116	116	
116	DORM 7	S1	A/116	115	
117	DORM 6	S1	A/117	114	
118	DORM 5	S1	A/118	113	
119	DORM 4	S1	A/119	112	
120	DORM 3	S1	A/120	110	
121	DORM 2	S1	A/121	108	
122	DORM 1	S1	A/122	107	
123	UTILITY	S1	A/123	120	
124	I.T.	S1	A/124	119	
125	RR	S2	A/125	117	
126	RR	S2	A/126	111	
127	ADA RR	S2	A/127	109	
128	HALLWAY	-	-	-	
129	APPARATUS BAYS	-	-	-	
130	YARD STRG.	S1	A/130	126	
131	FIRE RISER	S1	A/131	127	
132	DECON.	S2	A/132	125	
133	UTILITY	A1	A/133	124	
134	GEAR ROOM	S1	A/134	123	
135	SHOP	S1	A/134	122	
136	AIR LOCK	-	-	-	
137	EXCERCISE	S1	A/137	121	
201	MEZZANINE	S1		201	SIGN LOCATION: LEVEL 1, BETWEEN THE STAIR AND DOOR A/132

SIGNAGE SCHEDULE - ADD ALTERNATE #2

140	WASH BAY	S1	B/140	101	
141	CHEMICAL STORAGE	S1	A,B/141	102	

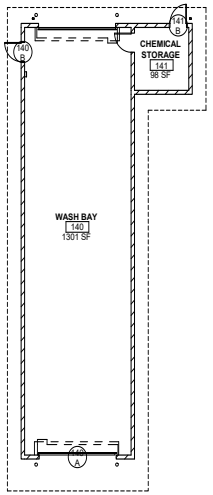

5 SIGNAGE DETAIL - ADD ALTERNATE #2
SCALE: 3/32" = 1'-0"

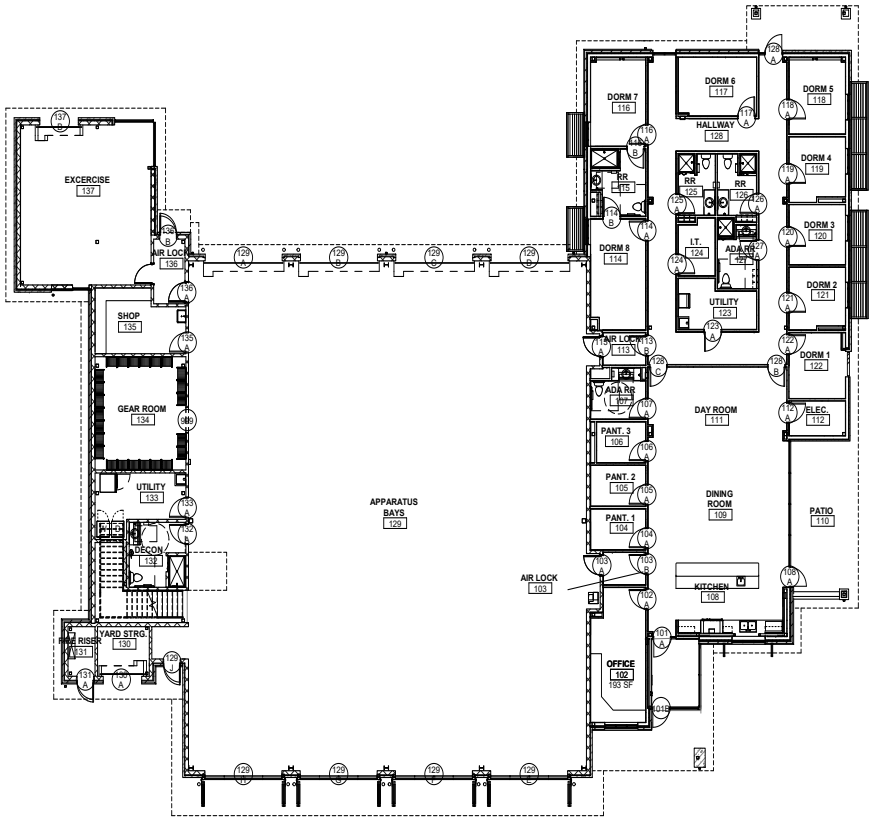

1 LEVEL 1 - SIGNAGE DETAIL - BASE BID
SCALE: 3/32" = 1'-0"

4.1402

PROFESSIONAL SEAL

REGISTERED ARCHITECT JUSTIN E. MYERS 24640 STATE OF TEXAS

LOGO/CONTACT

martinez ARCHITECTS

Martinez Architect, LP
900 Rockmead, Suite 250
Houston, Texas 77339
281.346.7371

DESIGN TEAM

Architectural
Martinez Architects

Civil Engineer
Maverick Engineering

Structural
Matrix Structural engineers

MEP/T
DBR

Landscape Architect
KDC Associates

FIRE STATION #11
CITY OF MIDLAND
6600 BRIARWOOD AVE
MIDLAND, TX 79707

PROJECT No: **MA 18017**
DATE: **16-JAN-2020**

ISSUE
100% DESIGN DEVELOPMENT 22-MAY-2019
75% CONSTRUCTION DOCUMENT 26-JUN-2019
100% ISSUE FOR PERMIT 30-JUL-2019
100% ISSUE FOR APPROVAL TO BID 16-JAN-2020

SIGNAGE DETAIL & SCHEDULE

A905

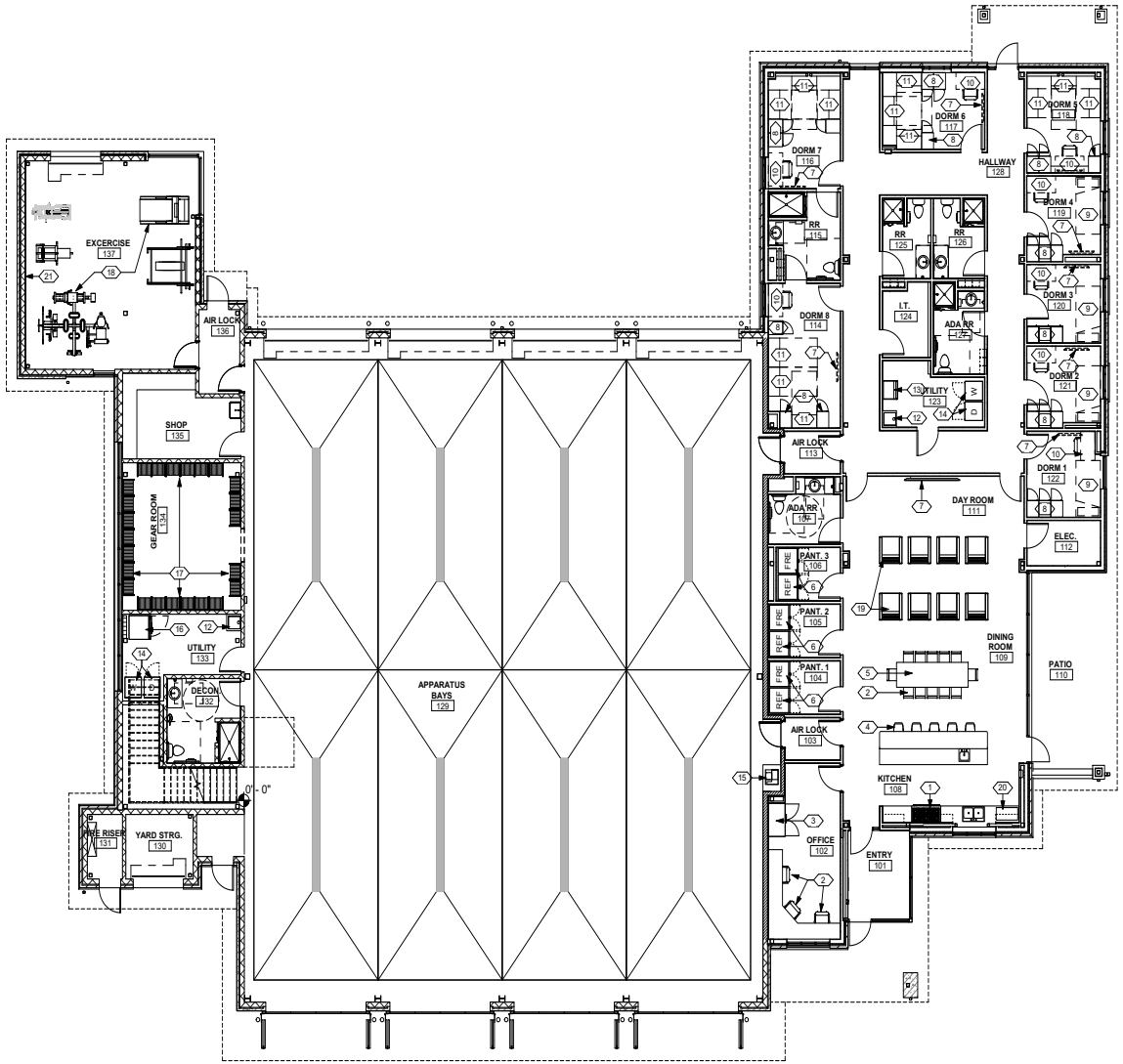

1 LEVEL 1 - FF&E
SCALE: 1/8" = 1'-0"

EQUIPMENT SCHEDULE				
KEY NOTE	ITEM	FURNISHED BY	INSTALLED BY	NOTES
1	RANGE/ HOOD/ OVEN	CONTRACTOR	CONTRACTOR	
2	CHAIR	OWNER	OWNER	
3	STORAGE CABINET	OWNER	CONTRACTOR	
4	BAR STOOL	OWNER	OWNER	
5	TABLE	OWNER	OWNER	
6	REFRIGERATOR/ FREEZER	OWNER	CONTRACTOR	
7	TELEVISION	OWNER	OWNER	
8	2-TIER LOCKER	CONTRACTOR	CONTRACTOR	
9	TWIN XL BED	OWNER	OWNER	
10	TABLE/ CHAIR	OWNER	OWNER	
11	MURPHY BED	CONTRACTOR	CONTRACTOR	
12	MOP SINK	CONTRACTOR	CONTRACTOR	
13	ICE MACHINE	CONTRACTOR	CONTRACTOR	
14	WASHER/ DRYER	OWNER	CONTRACTOR	
15	PRINTER	OWNER	OWNER	
16	EXTRACTOR	OWNER	CONTRACTOR	
17	GEAR GRID LOCKER	CONTRACTOR	CONTRACTOR	
18	EXERCISE EQUIPMENT	OWNER	OWNER	
19	RECLINER	OWNER	OWNER	
20	MICROWAVE	OWNER	OWNER	
21	WALL MIRROR	CONTRACTOR	CONTRACTOR	

PROFESSIONAL SEAL

REGISTERED ARCHITECT JUSTIN E. MARTINEZ 24640 STATE OF TEXAS

LOGO/CONTACT

martinez ARCHITECTS

Martinez Architect, LP
900 Rockmead, Suite 250
Houston, Texas 77339
281.346.7371

DESIGN TEAM

Architectural
Martinez Architects

Civil Engineer
Maverick Engineering

Structural
Matrix Structural engineers

MEP/T
DBR

Landscape Architect
KDC Associates

FIRE STATION #11

CITY OF MIDLAND
6600 BRIARWOOD AVE
MIDLAND, TX 79707

PROJECT No: **MA 18017**
DATE: **16-JAN-2020**

ISSUE

100% DESIGN DEVELOPMENT
22-MAY-2019

75% CONSTRUCTION DOCUMENT
26-JUN-2019

100% ISSUE FOR PERMIT
30-JUL-2019

100% ISSUE FOR APPROVAL TO BID
16-JAN-2020

EQUIPMENT SCHEDULE

A906

4.1403

FIRE STATION #11

Briarwood Ave & Golden Gate Dr
Midland, TX 79707

ABBREVIATIONS

ABBR.	ABBREVIATION
A.F.F.	ABOVE FINISH FLOOR
ADDN'L	ADDITIONAL
AHU	AIR HANDLING UNIT
ALT.	ALTERNATE
ANCH.	ANCHOR
A.B.	ANCHOR BOLT
A.R.	ANCHOR ROD
APPROX.	APPROXIMATELY
ARCH.	ARCHITECT(URAL)
BM.	BEAM
BRG.	BEARING
BTW	BETWEEN
BOT.	BOTTOM
B.F.B.	BOTTOM FLANGE BRACE
B.O.	BOTTOM OF
BRDG.	BRIDGING
BLDG	BUILDING
C.	CAMBER
CANT.	CANTILEVER
C.I.P.	CAST IN PLACE
C/C	CENTER TO CENTER
CL	CENTERLINE
CH	CHANNEL
CLR.	CLEAR(ANCE)
CFMS	COLD FORMED METAL STUD
COL.	COLUMN
CJP	COMPLETE JOINT PENETRATION
CONC.	CONCRETE
CMU	CONCRETE MASONRY UNIT
CONN.	CONNECTION
CONST.	CONSTRUCTION
C.J.	CONSTRUCTION / CONTRACTION JOINT
CONT.	CONTINUOUS
COORD.	COORDINATE
DL	DEAD LOAD
DBA	DEFORM BAR ANCHOR
D	DEPTH
DET.	DETAIL
DIA. or Ø	DIAMETER
DIM.	DIMENSION
DWL.	DOWEL
D.N.	DOWN
DWG.	DRAWING
EA.	EACH
E.F.	EACH FACE
E.W.	EACH WAY
EL	ELEVATION
ELEV.	ELEVATOR
EMBED.	EMBEDMENT
ENGR.	ENGINEER
EOR	ENGINEER OF RECORD
EQ.	EQUAL
EQUIP.	EQUIPMENT
EQUIV.	EQUIVALENT
EXIST.	EXISTING
E.J.	EXPANSION JOINT
EXT.	EXTERIOR
f'c=	28 DAY CONCRETE STRENGTH
FAB.	FABRICATE
F.S.	FAR SIDE
FIN	FINISH/FINISHED
FLR	FLOOR
F.D.	FLOOR DRAIN
FTG.	FOOTING
Fy=	YIELD STRENGTH
GALV.	GALVANIZED
GA.	GAUGE
GEN.	GENERAL
G.C.	GENERAL CONTRACTOR
GFRC	GLASS FIBER REINFORCED CONCRETE

GR.	GRADE/GRADING
HGR.	HANGER
HSA	HEADED STUD ANCHOR
HI	HIGH
HSS	HOLLOW STRUCTURAL SECTION
HORIZ.	HORIZONTAL
H	HORIZONTAL REACTION
IN	INCH
INFO.	INFORMATION
ID	INSIDE DIAMETER
INT.	INTERIOR
JT.	JOINT
JST.	JOIST
K	KIPS (1000 LBS)
KSF	KIPS PER SQUARE FOOT
KSI	KIPS PER SQUARE INCH
L	ANGLE
Ld	DEVELOPMENT LENGTH
LWC	LIGHTWEIGHT CONCRETE
LL	LIVE LOAD
LLBB	LONG LEG BACK TO BACK
LLV	LONG LEG VERTICAL
LLH	LONG LGE HORIZONTAL
LSH	LONG SIDE HORIZONTAL
LSV	LONG SIDE VERTICAL
LONG	LONGITUDINAL
LO	LOW
LBS	POUNDS
MFR. / MNFR.	MANUFACTURER
MAS.	MASONRY
MAX.	MAXIMUM
MECH.	MECHANICAL
MEP	MECHANICAL, ELECTRICAL, PLUMBING
MTL.	METAL
MIN.	MINIMUM
MISC.	MISCELLANEOUS
M	MOMENT
M.C.	MOMENT CONNECTION
N.S.	NEAR SIDE
NWC	NORMAL WEIGHT CONCRETE
N.I.C.	NOT IN CONTRACT
N.T.S.	NOT TO SCALE
NO.	NUMBER
O.C.	ON CENTER(S)
OPNG.	OPENING
OPP.	OPPOSITE
OPH.	OPPOSITE HAND
OD	OUTSIDE DIAMETER
OA	OVERALL
O.H.	OVERHEAD
OVS.	OVERSIZED HOLE
P	AXIAL LOAD
PAR.	PARALLEL
PRKG.	PARKING
PJP	PARTIAL JOINT PENETRATION
PVMT	PAVEMENT
PVG	PAVING
PERP.	PERPENDICULAR
PL.	PLATE
PLBG	PLUMBING
PT	POST-TENSION(ED)
PCF	POUNDS PER CUBIC FOOT/FEET
PLF	POUNDS PER LINEAR FOOT
PSF	POUNDS PER SQUARE FOOT/FEET
PSI	POUNDS PER SQUARE INCH
P/C	PRECAST CONCRETE

PRELIM.	PRELIMINARY
P.L.	PROPERTY LINE
QTY	QUANTITY
R	RADIUS, REACTION, REMAINDER
REC.	RECESSED
RE:	REFER TO
REF.	REFERENCE
REINF.	REINFORCED / REINFORCING
REBAR	REINFORCING BAR
REQ'D	REQUIRED
REV.	REVISION
R.D.	ROOF DRAIN
RTU	ROOF TOP UNIT
SCHED.	SCHEDULE
SECT.	SECTION
SHT.	SHEET
SLBB	SHORT LEG BACK TO BACK
SIM.	SIMILAR
SC	SLIP CRITICAL, SHEAR CONNECTOR
SPA.	SPACING
SPEC.	SPECIFICATION
SQ.	SQUARE
SF.	SQUARE FOOT/FEET
STD	STANDARD
STL	STEEL
STIFF.	STIFFENER
STIR.	STIRRUP
STRUCT.	STRUCTURE/STRUCTURAL
TEMP.	TEMPERED
THK	THICK(NESS)
t	THICKNESS, TREAD
THD	THREADED
T.O.	TOP OF
T.O.C.	TOP OF CONCRETE
T.O.M.	TOP OF MASONRY
T.O.P.	TOP OF PARAPET
T.O.S.	TOP OF STEEL
T.O.W.	TOP OF WALL
TYP.	TYPICAL
U.N.O.	UNLESS NOTED OTHERWISE
V.I.F.	VERIFY IN FIELD
VERT.	VERTICAL
WT.	WEIGHT
WWR	WELD WIRE REINF.
W	WIDTH
WL	WIND LOAD
W.P.	WORK POINT
XXS	DOUBLE EXTRA STRONG
XS	EXTRA STRONG
&	AND
≈	APPROXIMATELY EQUAL
@	AT
°	DEGREE
=	EQUAL
≥	GREATER THAN or EQUAL
≤	LESS THAN or EQUAL
#	NUMBER or POUNDS
/	PER
±	PLUS or MINUS
Ø	ROUND/DIAMETER

SYMBOLS LEGEND

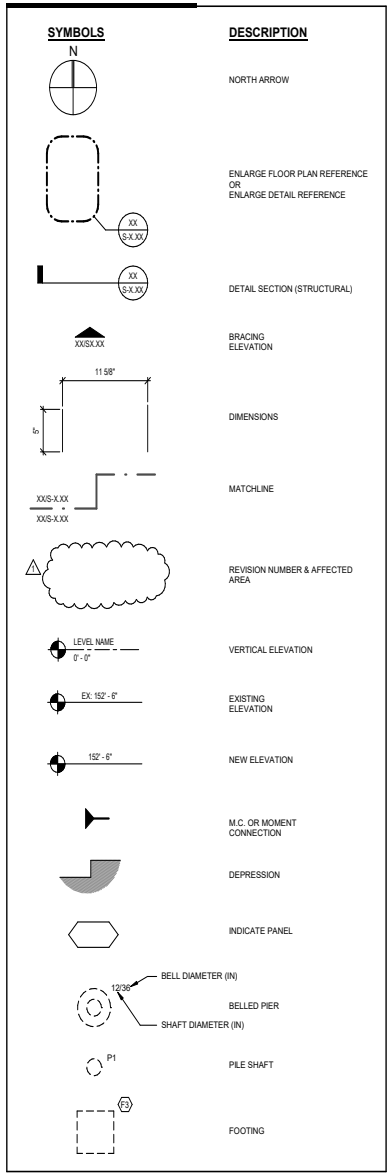

MSE# 18135
Issue Date: 01/14/2020
Project Status: 99% CD

STRUCTURAL SHEET INDEX

SHEET NUMBER	SHEET NAME	Current Revision
S000	COVER SHEET	
S001	3D CONCEPTUAL	
S101	GENERAL NOTES	
S102	GENERAL NOTES	
S103	GENERAL NOTES	
S201	FOUNDATION PLAN - FIRE STATION	
S202	FOUNDATION PLAN - SUPPORT COMPONENTS	
S211	MEZZANINE FRAMING & LOW ROOF FRAMING PLANS	
S212	HIGH ROOF FRAMING PLAN	
S213	ROOF FRAMING PLANS - SUPPORT COMPONENTS	
S301	FOUNDATION DETAILS	
S302	FOUNDATION DETAILS	
S303	FOUNDATION DETAILS	
S304	FOUNDATION DETAILS	
S305	FOUNDATION DETAILS	
S306	FOUNDATION DETAILS	
S401	FRAMING DETAILS	
S402	FRAMING DETAILS	
S403	FRAMING DETAILS	
S404	FRAMING DETAILS	
S501	FLOOR FRAMING DETAILS	
S502	FLOOR FRAMING DETAILS	
S601	ROOF FRAMING DETAILS	
S602	ROOF FRAMING DETAILS	
S603	ROOF FRAMING DETAILS	
S604	ROOF FRAMING DETAILS	
S605	ROOF FRAMING DETAILS	
S606	ROOF FRAMING DETAILS	
S607	ROOF FRAMING DETAILS	
S608	ROOF FRAMING DETAILS	
S609	ROOF FRAMING DETAILS	
S610	ROOF FRAMING DETAILS	
S701	MASONRY DETAILS	
S702	MASONRY DETAILS	
S703	MASONRY DETAILS	
S801	BRACE ELEVATIONS & DETAILS	
S802	BRACE DETAILS	

PROFESSIONAL SEAL

Matrix Structural Engineers
TBPE Firm Registration No. F-2640
STATE OF TEXAS
JAYNDOL A. KHAYBATTEE
68260
LICENSED PROFESSIONAL ENGINEER
01/14/2020

LOGO/CONTACT

MATRIX STRUCTURAL ENGINEERS
5177 Richmond Avenue, Suite 670
Houston, TX 77056-2401
Tel: 713.664.0133
Fax: 713.664.1370
MSE - 18135

DESIGN TEAM

Architectural
Martinez Architects

Civil Engineer
Maverick Engineering

Structural
Matrix Structural engineers

MEP
DBR

Landscaping
KDC Associates

FIRE STATION #11
CITY OF MIDLAND
Briarwood Ave & Golden Gate Dr
Midland, TX 79707

PROJECT No: **MA 18017**
DATE: **01/14/2020**

ISSUE
100% DESIGN DEVELOPMENT 22-MAY-2019
75% CONSTRUCTION DOCUMENT 26-JUN-2019
100% ISSUE FOR PERMIT 30-JUL-2019
100% ISSUE FOR APPROVAL TO BID 16-JAN-2020

COVER SHEET

S000

4.1404

1/15/2020 9:10:19 AM

NOTE:
THIS 3D DIMENSIONAL VIEW IS PROVIDED AS A CONCEPTUAL SCHEMATIC ONLY. ACCORDINGLY, VARIOUS ITEMS, INCLUDING, BUT NOT LIMITED TO, MISC. STEEL, ROOF DECK, FLOOR DECKS, CONNECTION PLATES, AND REINFORCING MAY NOT BE SHOWN. REFER TO PLANS AND DETAILS FOR ALL MEMBER SIZES, LOCATIONS, DIMENSIONS, AND ADDN'L INFO.

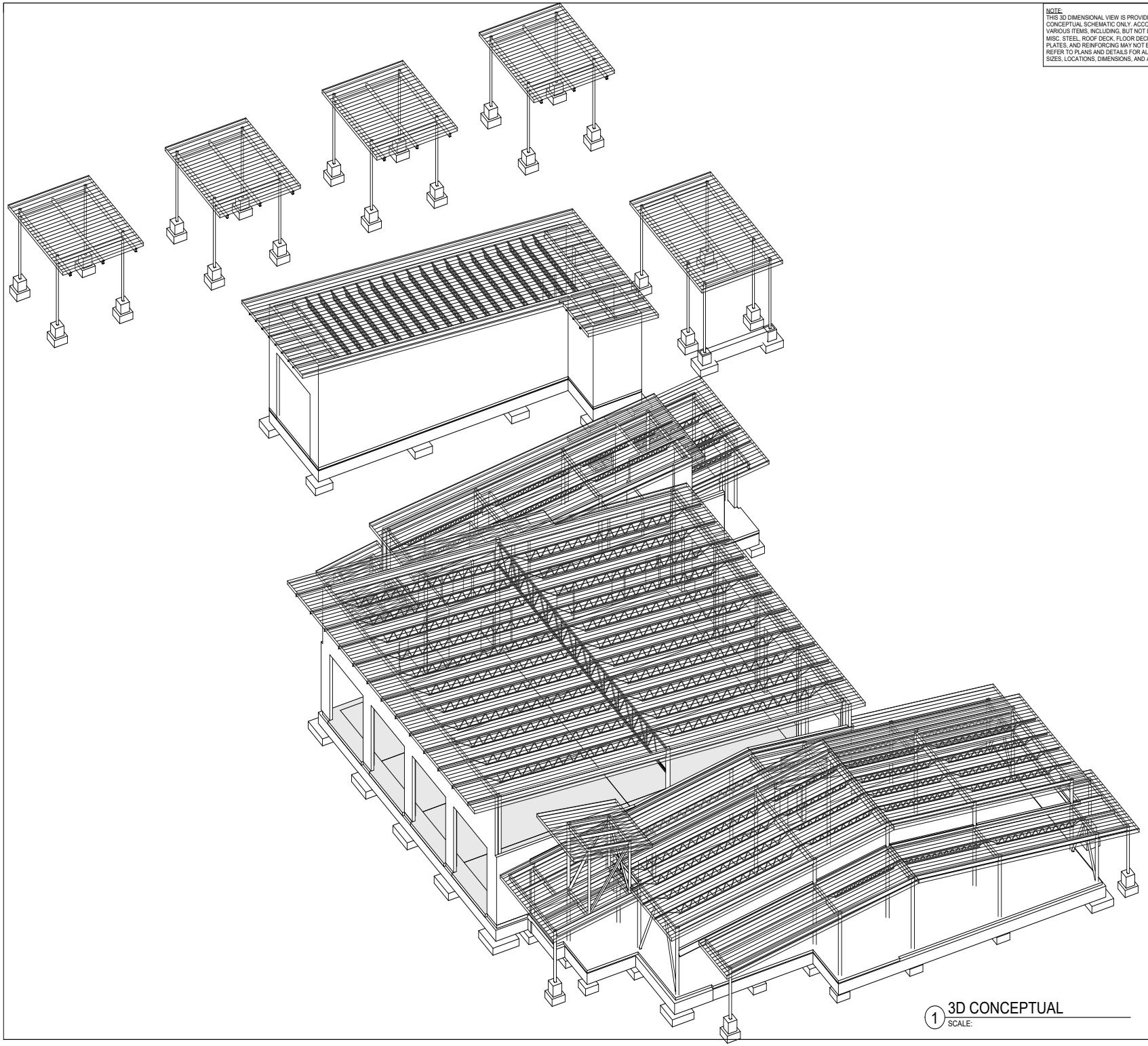

1 3D CONCEPTUAL
SCALE:

PROFESSIONAL SEAL

Matrix Structural Engineers
TBPE Firm Registration No. F-3640

01/14/2020

LOGO/CONTACT

MATRIX
STRUCTURAL
ENGINEERS

5177 Richmond Avenue, Suite 670
Houston, TX 77046-2401
Tel: 713.664.0135
Fax: 713.664.1370
MSE - 18135

DESIGN TEAM

Architectural
Martinez Architects

Civil Engineer
Maverick Engineering

Structural
Matrix Structural engineers

MEP
DBR

Landscaping
KDC Associates

FIRE STATION #11

CITY OF MIDLAND

Briarwood Ave & Golden Gate Dr
Midland, TX 79707

PROJECT No: **MA 18017**
DATE: **01/14/2020**

ISSUE

100% DESIGN DEVELOPMENT 22-MAY-2019
75% CONSTRUCTION DOCUMENT 26-JUN-2019
100% ISSUE FOR PERMIT 30-JUL-2019
100% ISSUE FOR APPROVAL TO BID 16-JAN-2020

3D CONCEPTUAL

S001

4.1405

A. GENERAL

1. ALL WORK SHALL CONFORM TO THE MINIMUM STANDARDS OF THE FOLLOWING CODES. THE CODES LISTED SHALL INCLUDE ALL AMENDMENTS AND ADDENDA IN FORCE AT THE DATE OF THE CONTRACT DOCUMENTS.

   2015 EDITION OF THE INTERNATIONAL BUILDING CODE

2. WHERE CONFLICT EXISTS AMONG THE VARIOUS PARTS OF THE STRUCTURAL AND ARCHITECTURAL CONTRACT DOCUMENTS THE STRICTEST REQUIREMENTS SHALL GOVERN.
3. CONTRACTOR SHALL FIELD VERIFY ALL DIMENSIONS AND EXISTING CONDITIONS AT THE JOB SITE AND REPORT ANY DISCREPANCIES OR INCONSISTENCIES FROM ASSUMED CONDITIONS TO THE ARCHITECT PRIOR TO FABRICATION AND CONSTRUCTION.
4. DETAILS LABELED "TYPICAL DETAILS" ON THE DRAWINGS SHALL APPLY TO ALL SITUATIONS OCCURRING ON THE PROJECT THAT ARE THE SAME OR SIMILAR TO THOSE SPECIFICALLY DETAILED. SUCH DETAILS APPLY WHETHER OR NOT THEY ARE CUT AT EACH LOCATION. QUESTIONS REGARDING APPLICABILITY OF TYPICAL DETAILS SHALL BE DETERMINED BY THE ENGINEER.
5. DO NOT SCALE THE DRAWINGS.
6. THE GENERAL CONTRACTOR SHALL COMPARE THE ARCHITECTURAL AND STRUCTURAL DRAWINGS AND REPORT ANY DISCREPANCY BETWEEN EACH SET OF DRAWINGS AND WITHIN EACH SET OF DRAWINGS TO THE ARCHITECT AND ENGINEER PRIOR TO THE FABRICATION AND INSTALLATION OF ANY STRUCTURAL MEMBERS.
7. IT IS THE RESPONSIBILITY OF THE GENERAL CONTRACTOR TO OBTAIN ALL CONTRACT DOCUMENTS AND LATEST ADDENDA AND TO SUBMIT SUCH DOCUMENTS TO ALL SUBCONTRACTORS AND MATERIAL SUPPLIERS PRIOR TO THE SUBMITTAL OF SHOP DRAWINGS, FABRICATION OF ANY STRUCTURAL MEMBERS, AND ERECTION IN THE FIELD.
8. IT IS THE RESPONSIBILITY OF THE CONTRACTOR TO PROVIDE ALL MEASURES NECESSARY TO PROTECT THE STRUCTURE DURING CONSTRUCTION. SUCH MEASURES SHALL INCLUDE, BUT ARE NOT LIMITED TO, BRACING AND SHORING FOR LOADS DUE TO HYDROSTATIC, EARTH, WIND OR SEISMIC FORCES, AND CONSTRUCTION EQUIPMENT. OBSERVATION VISITS TO THE SITE BY THE ENGINEER SHALL NOT INCLUDE INSPECTION OF THE ABOVE ITEMS.
9. THE CONTRACT STRUCTURAL DRAWINGS AND SPECIFICATIONS REPRESENT THE FINISHED STRUCTURE. THEY DO NOT INDICATE THE METHOD OF CONSTRUCTION. THE CONTRACTOR SHALL SUPERVISE AND DIRECT THE WORK AND SHALL BE SOLELY RESPONSIBLE FOR ALL CONSTRUCTION MEANS, METHODS, PROCEDURES, TECHNIQUES, AND SEQUENCE.
10. PERIODIC SITE OBSERVATION BY THE ENGINEER IS SOLELY FOR THE PURPOSE OF DETERMINING IF THE WORK OF THE CONTRACTOR IS PROCEEDING IN GENERAL ACCORDANCE WITH THE STRUCTURAL CONTRACT DOCUMENTS. THIS LIMITED SITE OBSERVATION SHOULD NOT BE CONSTRUED AS EXHAUSTIVE OR CONTINUOUS TO CHECK THE QUALITY OF THE WORK, BUT RATHER PERIODIC IN AN EFFORT TO GUARD THE OWNER AGAINST DEFECTS OR DEFICIENCIES IN THE WORK OF THE CONTRACTOR.
11. NOTIFY THE STRUCTURAL ENGINEER WHEN DRAWINGS BY OTHERS SHOW OPENINGS, POCKETS, ETC., NOT SHOWN ON THE STRUCTURAL DRAWINGS, BUT WHICH ARE LOCATED IN THE STRUCTURAL MEMBERS.
12. DO NOT PENETRATE ANY STRUCTURAL ELEMENTS (BEAMS, COLUMNS, WALLS, SLABS, ETC.) WITHOUT PRIOR WRITTEN APPROVAL OF STRUCTURAL ENGINEER.
13. NOTES AND DETAILS ON DRAWINGS SHALL TAKE PRECEDENCE OVER GENERAL STRUCTURAL NOTES AND TYPICAL DETAILS. WHERE NO SPECIFIC DETAILS ARE SHOWN, CONSTRUCTION SHALL CONFORM TO SIMILAR WORK ON THE PROJECT.
14. SEE THE ARCHITECTURAL DRAWINGS FOR THE FOLLOWING:

    SIZE AND LOCATION OF DOOR AND WINDOW OPENINGS,
    SIZE AND LOCATION OF INTERIOR AND EXTERIOR NON-LOAD BEARING PARTITIONS, SIZE AND LOCATION OF CONCRETE CURBS, FLOOR DRAINS, SLOPES, DEPRESSED AREAS, CHAMFERS, GROOVES, INSERTS, ETC., SIZE AND LOCATION OF FLOOR AND ROOF OPENINGS, FLOOR AND ROOF FINISHES,
    STAIR FRAMING AND DETAILS, DIMENSIONS NOT SHOWN ON THE STRUCTURAL DRAWINGS, CEILING AND EXTERIOR WALL ASSEMBLIES.

15. SEE THE MECHANICAL, PLUMBING, AND ELECTRICAL DRAWINGS FOR THE FOLLOWING:

    PIPES, SLEEVES, HANGERS, TRENCHES, WALL, FLOOR AND ROOF OPENINGS, DUCT PENETRATIONS, ETC., EXCEPT AS SHOWN OR NOTED OTHERWISE ELECTRICAL CONDUIT RUNS, BOXES, OUTLETS IN WALLS AND SLABS, CONCRETE INSERTS FOR ELECTRICAL, MECHANICAL, OR PLUMBING FIXTURES, SIZE AND LOCATION OF MACHINE OR EQUIPMENT BASES AND ANCHOR BOLTS FOR MOUNTS.

B. DESIGN CRITERIA

1. DEAD LOAD MATERIALS ASSUMED IN THE DESIGN ARE SHOWN ON THE ARCHITECTURAL AND STRUCTURAL DRAWINGS.
2. AN ALLOWANCE OF 15 PSF HAS BEEN MADE FOR PARTITIONS AS A UNIFORMLY DISTRIBUTED LIVE LOAD, WHEREVER PARTITIONS ARE USED AND LOCATION SUBJECT TO CHANGE EXCLUDING PUBLIC LOBBIES, CORRIDORS, RESTROOMS, AND PLACES OF PUBLIC ASSEMBLY.
3. LIVE LOADS:

LOCATION	UNIFORM LOAD	CONCENTRATED LOAD
ROOF	20 PSF REDUCIBLE	300 LBS
BALCONIES	100 PSF REDUCIBLE	
TYPICAL FLOOR	40 PSF REDUCIBLE	
CORRIDORS	100 PSF REDUCIBLE	
STAIRS AND EXITS	100 PSF REDUCIBLE	300 LBS
STORAGE	150 PSF REDUCIBLE	
GROUND FLR, COMMON AREAS	100 PSF REDUCIBLE	
HANDRAILS AND GUARDRAILS	50 PLF OR 200 LBS APPLIED AT TOP RAIL IN ANY DIRECTION. 50 LBS IN ANY DIRECTION APPLIED AT INTERMEDIATE RAILS.	
GRAB BARS		250 LBS ANY DIRECTION
APPARATUS BAY	250 PSF REDUCIBLE	

4. WIND LOADS

ULTIMATE WIND SPEED	120 MPH (3-SEC GUST)
NOMINAL WIND SPEED	93 MPH (3-SEC GUST)
RISK CATEGORY	IV
EXPOSURE CATEGORY	B
INTERNAL PRESSURE COEFF.	+/- 0.18
COMPONENTS & CLADDING	SEE PLAN

5. SEISMIC LOADS

RISK CATEGORY	IV
SITE CLASS	D
IMPORTANCE FACTOR	1.5
MAPPED ACCELERATION PARAMETERS	
SS:	0.126g
S1:	0.035g
SPECTRAL RESPONSE COEFFICIENTS	
SDS:	0.134g
SD1:	0.055g
SEISMIC DESIGN CATEGORY	A

SEISMIC DESIGN NOT REQUIRED PER SECTION 11-7 OF ASCE 7-10

6. SNOW LOADS

FLAT-ROOF SNOW LOAD:	4.2 PSF
EXPOSURE FACTOR:	1.0
IMPORTANCE FACTOR	I=1.2
THERMAL FACTORS	C_f=1.0

7. HANDRAILS, GUARDRAILS AND GRAB BARS (INCLUDING ATTACHMENT TO STRUCTURE) SHALL BE DESIGNED BY THE FABRICATOR FOR THE LOADS INDICATED IN THE REFERENCED BUILDING CODE. SHOP DRAWINGS SHALL BE SEALED BY A PROFESSIONAL ENGINEER IN THE STATE OF WHERE THE PROJECT IS LOCATED, REPRESENTING THE FABRICATOR.
8. STAIRS SHALL BE DESIGNED BY THE STEEL FABRICATOR FOR CODE REQUIRED LOADS. SHOP DRAWINGS SHALL BE SEALED BY A PROFESSIONAL ENGINEER IN THE STATE OF WHERE THE PROJECT IS LOCATED, REPRESENTING THE FABRICATOR.

C. FOUNDATION

1. THE FOUNDATION DESIGN IS BASED ON THE FOLLOWING GEOTECHNICAL REPORT (AND ANY ADDENDA) PREPARED BY THE FOLLOWING COMPANY:

   COMPANY: BEYOND
   REPORT NO. GT1902006
   DATED: 04/11/2019

   ALL RECOMMENDATIONS THEREIN THAT RELATE TO THE WORK SHOWN ON THESE DRAWINGS SHALL BE FOLLOWED.

2. THE FOUNDATION SYSTEM IS DESIGNED BASED ON THE FOLLOWING

   ALLOWABLE BEARING PRESSURE
   SUSTAINED LOAD: 3000 PSF

3. THE GENERAL CONTRACTOR SHALL NOTIFY THE GEOTECHNICAL ENGINEER OR OTHER AUTHORIZED INSPECTOR FOR REVIEW OF FOUNDATION BEARING SURFACE, INSPECTION OF FOUNDATION INSTALLATION, AND PLACEMENT OF REINFORCING STEEL. THE CONTRACTOR SHALL NOT PLACE CONCRETE WITHOUT INSPECTOR'S APPROVAL.
4. THE CONTRACTOR SHALL NOTIFY THE AUTHORIZED INSPECTOR 48 HOURS IN ADVANCE OF ANY MAJOR FOUNDATION POUR.
5. FORM EXPOSED FACES OF GRADE BEAMS.
6. GRADE BEAM BOTTOM STEEL SHALL BE CHAIRED AT 5 FOOT MAXIMUM CENTERS USING BEAM BOLSTERS PROVIDING 3 INCH BOTTOM COVER TO REINFORCING STEEL. BEAM BOLSTERS USED SHALL BE INTENDED FOR SUPPORT ON SOIL.
7. BOTTOM BARS OF GRADE BEAM SHALL BE SPLICED (WHERE REQUIRED) AT THE PIERS ONLY. TOP BARS SHALL BE SPLICED (WHERE REQUIRED) AT THE MIDSPAN OF THE GRADE BEAMS. LAP LENGTH SHALL BE 44 TIMES BAR DIAMETER UNLESS SPECIFIED OTHERWISE. PROVIDE CORNER BARS TO MATCH TOP AND BOTTOM STEEL.
8. SLAB ON GRADE CONSTRUCTION SHALL FOLLOW THE RECOMMENDATIONS OF GUIDE FOR CONCRETE FLOOR AND SLAB CONSTRUCTION ACI 302.1R. PROVIDE (3) #3 X 4'-0" TOP AND BOTTOM AT ALL SLAB ON GRADE RE-ENTRANT CORNERS.
9. SUBGRADE PREPARATION SHALL CONFORM TO THE SOILS REPORT NOTED ABOVE. IF REPORT DOES NOT SPECIFY THE AMOUNT OF SELECT FILL, PROVIDE FILL AS REQUIRED ABOVE TO REDUCE PVR TO 1 INCH.
10. VAPOR RETARDER SHALL HAVE NO MORE THAN 0.01 PERMS AS TESTED BEFORE AND AFTER MANDATORY CONDITIONING (ASTM E 1745 SECTION 7.1 AND SUB-PARAGRAPHS 7.1.2-5), MEET OR EXCEED THE REQUIREMENTS OF ASTM E 1745 CLASS A AND BE NO LESS THAN 15 MILS THICK.
11. ALL VAPOR RETARDER SEAMS SHALL BE OVERLAPPED A MINIMUM OF 6 INCHES AND TAPED WITH MANUFACTURER'S TAPE. ALL PENETRATIONS, BLOCK-OUTS, AND OPENINGS SHALL BE SEALED USING A COMBINATION OF THE VAPOR RETARDER, MASTIC AND MANUFACTURER'S TAPE.
12. THE BEARING STRATUM OF EACH SPREAD FOOTING AND ALL STRIP FOOTINGS SHALL BE INSPECTED AND APPROVED BY THE GEOTECHNICAL ENGINEER OR OTHER AUTHORIZED INSPECTOR PRIOR TO POURING OF CONCRETE.
13. PROVIDE AND INSTALL 1/8 INCH STEEL TEMPLATES TO ACCURATELY SET ANCHOR BOLTS FOR STEEL COLUMNS.
14. FOOTINGS SHALL BE NEAT EXCAVATED WHERE POSSIBLE WITH SIDES AND TOP EDGES FREE OF LOOSE OR WET MATERIALS. WHERE NEAT EXCAVATION IS NOT POSSIBLE, FOOTING EXCAVATION SHALL BE OPEN CUT WITH EDGES FORMED AND BRACED. ALL FOOTINGS WITH FORMED EDGES SHALL BE BACKFILLED FROM BOTTOM TO TOP OF FOOTING WITH LEAN CONCRETE OR CEMENT STABILIZED SAND. THE BOTTOM EXCAVATION SHALL BE CLEAN AND DRY WITH ALL LOOSE MATERIAL REMOVED FOR AN ESSENTIALLY FLAT BEARING SURFACE. EXCAVATIONS SHALL NOT BE LEFT OVERNIGHT UNLESS A 2 INCH UNREINFORCED SEAL (MUD) SLAB IS PLACED AT THE BOTTOM OF THE FOOTING EXCAVATION. WHERE SOFT OR UNSUITABLE BEARING SURFACES ARE ENCOUNTERED, THE AREA SHALL BE UNDERCUT AS REQUIRED AND REPLACED WITH COMPACTED FILL, CEMENT STABILIZED SAND, OR CONCRETE AS DIRECTED BY THE GEOTECHNICAL ENGINEER. FILL MATERIAL, IF USED, SHALL BE COMPACTED IN 6 INCHES MAXIMUM LOOSE LIFTS TO A MINIMUM 95% OF STANDARD PROCTOR DENSITY (ASTM D 698) UNLESS SPECIFIED OTHERWISE BY THE GEOTECHNICAL ENGINEER.

D. CONCRETE

1. ALL ASPECTS OF WORK RELATING TO THE CONCRETE CONSTRUCTION SHALL CONFORM TO THE FOLLOWING CODES AND SPECIFICATIONS:

   ACI 318-14 BUILDING CODE REQUIREMENTS FOR STRUCTURAL CONCRETE
   ACI 301-11 SPECIFICATIONS FOR STRUCTURAL CONCRETE FOR BUILDINGS
   CRSI MANUAL OF STANDARD PRACTICE

2. STRUCTURAL CONCRETE 28-DAY COMPRESSIVE STRENGTHS AND TYPES ARE AS FOLLOWS:

LOCATION	STRENGTH	TYPE	AGGREGATE SIZE
DRILLED PIERS	3000 PSI	NORMAL WT	1 1/2"
GRADE BEAMS	3000 PSI	NORMAL WT	1"
PLINTHS	3000 PSI	NORMAL WT	1"
SLAB-ON-GRADE			
TYPICAL	3000 PSI	NORMAL WT	1 1/2"
APPARATUS BAY & WASH BAY	4000 PSI	NORMAL WT	1 1/2"
METAL DECK SLAB	3000 PSI	NORMAL WT	3/4"

3. THERE SHALL BE NO HORIZONTAL COLD JOINT IN ANY CONCRETE POUR.
4. ADMIXTURES USED SHALL BE COMPATIBLE WITH FLOOR TREATMENTS. FINISH APPLICATOR SHALL APPROVE ADMIXTURES AND CURING COMPOUNDS PRIOR TO USE.
5. CONCRETE FOR SLAB-ON-GRADE SHALL HAVE A MAXIMUM WATER-CEMENT RATIO OF 0.45. ALL OTHER CONCRETE SHALL HAVE A MAXIMUM WATER-CEMENT RATIO OF 0.50. ADJUST CONCRETE STRENGTH BEYOND MINIMUM SPECIFIED ABOVE TO MAINTAIN MAXIMUM WATER-CEMENT RATIO.
6. CONCRETE FOR SLAB-ON-GRADE AND METAL DECK SHALL BE PROPORTIONED FOR A MAXIMUM ALLOWABLE UNIT SHRINKAGE OF 0.04% (400 MICROSTATIONS) AT 28 DAYS OF DRYING. LENGTH CHANGE SHALL BE MEASURED IN ACCORDANCE WITH ASTM C157.
7. FLY ASH CONFORMING TO ASTM C618, MAY BE USED UNLESS NOTED OTHERWISE. THE MAXIMUM AMOUNT OF FLY ASH SHALL BE 25% OF THE TOTAL CEMENTITIOUS MATERIAL BY WEIGHT.
8. CONCRETE FORMS SHALL BE LAID OUT AND CONSTRUCTED TO PROVIDE THE SPECIFIED CAMBERS INDICATED ON THE STRUCTURAL DRAWINGS.
9. SUBMIT SHOP DRAWINGS TO ARCHITECT AND ENGINEER INDICATING LOCATIONS OF CONCRETE JOINTS TO REVIEW PRIOR TO PLACING CONCRETE. PLACE JOINTS AT LOCATIONS TO MINIMIZE THE EFFECTS OF SHRINKAGE AS WELL AS BEING PLACED AT POINTS OF LOW STRESS.
10. ROUGHEN CONCRETE SURFACES TO 1/4 INCH AMPLITUDE WHERE MASONRY WALLS INTERSECT CONCRETE OR WHERE NEW CONCRETE INTERFACES WITH EXISTING CONCRETE.
11. MECHANICAL PIPES AND ELECTRICAL CONDUITS WHICH PASS THROUGH SLAB-ON-GRADE, CONCRETE ON METAL DECK, FRAMED CONCRETE FLOORS, AND WALLS DO NOT REQUIRE SLEEVES UNLESS NOTED OTHERWISE ON THE PROJECT SPECIFICATIONS, MECHANICAL OR ELECTRICAL DRAWINGS. IF SLEEVES ARE REQUIRED, INSTALL SLEEVES BEFORE PLACING CONCRETE. DO NOT CUT ANY REINFORCING WHICH MAY INTERFERE WITH SLEEVE PLACEMENT. CORING OPENINGS IN CONCRETE IS NOT PERMITTED. NOTIFY THE ARCHITECT AND ENGINEER IN ADVANCE OF CONDITIONS NOT SHOWN ON THE STRUCTURAL DRAWINGS. NO PIPES OR ELECTRICAL CONDUIT SHALL PASS THROUGH CONCRETE BEAMS OR COLUMNS UNLESS SPECIFICALLY DETAILED.
12. WITH THE EXCEPTION OF SLABS ON GRADE AND CONCRETE ON METAL DECK, THE OUTSIDE DIAMETER OF MECHANICAL PIPES AND/OR ELECTRICAL CONDUITS (OTHER THAN THOSE PASSING THROUGH) SHALL NOT EXCEED 1/3 OF THE SLAB THICKNESS AND SHALL BE CENTERED BETWEEN THE TOP AND BOTTOM REINFORCING UNLESS SPECIFICALLY DETAILED OTHERWISE. CONCENTRATIONS OF MECHANICAL PIPES AND/OR ELECTRICAL CONDUITS SHALL BE AVOIDED EXCEPT WHERE DETAILED OPENINGS ARE PROVIDED. CONDUIT AND PIPE SHALL BE SPACED AT 3" OR 3 DIAMETERS ON CENTER, WHICHEVER IS GREATER.
13. FOR SLABS ON GRADE AND METAL DECK SLABS NO PIPES OR CONDUITS SHALL BE PLACED WITHIN THE INDICATED SLAB THICKNESS AND SHALL BE LOCATED BELOW THE SLAB UNLESS SPECIFICALLY DETAILED OTHERWISE.
14. THE DESIGN, CONSTRUCTION, AND SAFETY OF ALL FORMWORK SHALL BE THE RESPONSIBILITY OF THE GENERAL CONTRACTOR. ALL FORMS, SHORES, BACKSHORES, FALSEWORK, BRACING, AND OTHER TEMPORARY SUPPORTS SHALL BE ENGINEERED TO SUPPORT ALL LOADS IMPOSED INCLUDING THE WET WEIGHT OF CONCRETE, CONSTRUCTION EQUIPMENT, LIVE LOADS, LATERAL LOADS DUE TO WIND AND WET CONCRETE IMBALANCE. THE CONTRACTOR SHALL ALSO BE RESPONSIBLE FOR DETERMINING WHEN TEMPORARY SUPPORTS, SHORES, BACKSHORES, AND OTHER BRACING MAY BE SAFELY REMOVED.

E. REINFORCING STEEL

1. ALL ASPECTS OF WORK RELATING TO THE REINFORCING STEEL SHALL CONFORM TO THE FOLLOWING CODES AND SPECIFICATIONS:

   ACI 318-14 BUILDING CODE REQUIREMENTS FOR STRUCTURAL CONCRETE CRSI MANUAL OF STANDARD PRACTICE

2. DEFORMED BARS SHALL CONFORM TO THE REQUIREMENTS OF ASTM A615 GRADE 60.
3. WELDED WIRE FABRIC SHALL CONFORM TO THE REQUIREMENTS OF ASTM A185, YIELD STRENGTH 65,000 PSI. WELDED DEFORMED WIRE FABRIC FOR ASTM A497, YIELD STRENGTH 70,000 PSI. ALL WELDED WIRE FABRIC SHALL BE FURNISHED IN FLAT SHEETS ONLY. WHEREVER WELDED WIRE FABRIC IS SPECIFIED AS REINFORCEMENT, IT SHALL BE CONTINUOUS ACROSS THE ENTIRE CONCRETE SURFACE AND NOT INTERRUPTED BY BEAMS OR GIRDERS AND PROPERLY LAPPED ONE CROSS WIRE SPACING PLUS 2 INCHES.
4. MINIMUM LAP OF WELDED WIRE FABRIC SHALL BE 6 INCHES OR ONE FULL MESH AND ONE HALF, WHICHEVER IS GREATER.
5. WELDING OF REINFORCING IS PERMITTED ONLY WHERE SHOWN ON THE DRAWINGS OR WHEN APPROVED BY THE ENGINEER OF RECORD. WELDING OF REINFORCING BARS SHALL BE WITH LOW HYDROGEN ELECTRODES IN ACCORDANCE WITH THE RECOMMENDED PRACTICES OF AWS D1.4.
6. ALL REINFORCING BAR BENDS SHALL BE MADE COLD.
7. REINFORCING DOWELS BETWEEN FOOTINGS AND WALLS OR COLUMNS SHALL BE THE SAME NUMBER, SIZE, SPACING, AND GRADE AS THE SPECIFIED VERTICAL REINFORCING, UNO.
8. IN ADDITION TO ALL OF THE REINFORCING STEEL INDICATED ON THE DRAWINGS, THE CONTRACTOR SHALL PROVIDE FOR AN ALLOWANCE OF A NET 1/2 TON OF REINFORCING BARS TO BE FURNISHED, FABRICATED, AND PLACED DURING THE PROGRESSION OF WORK AS MAY BE DIRECTED BY THE ENGINEER OF RECORD.
9. CLEAR COVERAGE OF CONCRETE OVER REINFORCING BARS SHALL BE AS FOLLOWS:

LOCATION OF CONCRETE	MINIMUM COVER
CONCRETE CAST AGAINST AND PERMANENTLY EXPOSED TO EARTH	3"
CONCRETE EXPOSED TO EARTH OR WEATHER	
#6 THROUGH #18 BAR	2"
#5 BAR AND SMALLER	1 1/2"
CONCRETE NOT EXPOSED TO EARTH OR WEATHER OR IN CONTACT WITH GROUND	
SLABS, WALLS, JOISTS	3/4"
BEAMS, COLUMNS (INCLUDING TIES)	1 1/2"
SLAB ON GRADE	SEE DETAILS

F. NON-SHRINK GROUT FOR BASE PLATES AND BEARING PLATES

1. GROUT FOR BASE PLATES AND BEARING PLATES SHALL BE A NON-METALLIC, SHRINKAGE RESISTANT, PREMIXED, NON-CORROSIVE, NON-STAINING PRODUCT CONTAINING PORTLAND CEMENT, SILICA SANDS, SHRINKAGE COMPENSATING AGENTS, AND FLUIDITY IMPROVING COMPOUNDS.
2. GROUT SHALL CONFORM TO CORPS OF ENGINEERS SPECIFICATION FOR NON-SHRINK GROUT, CE-CRD-C621. TWENTY-EIGHT DAY COMPRESSIVE STRENGTH AS DETERMINED BY GROUT CUBE TESTS, SHALL BE 5,000 PSI. MINIMUM THICKNESS OF GROUT UNDER ALL BASE PLATES AND BEARING PLATES SHALL BE 1 INCH, UNLESS SPECIFIED OTHERWISE ON THE DRAWINGS.
3. GROUT SHALL BE PLACED IN A FLUID FLOWABLE STATE UNDER BASE PLATES THAT HAVE A FORM BUILT AROUND THEM FOR GROUT CONFINEMENT. GROUT SHOULD BE CURED ACCORDING TO MANUFACTURER'S RECOMMENDATIONS.

G. STRUCTURAL STEEL

1. ALL ASPECTS OF WORK RELATING TO THE DESIGN, FABRICATION, DETAILING, AND ERECTION OF STRUCTURAL STEEL SHALL CONFORM TO THE FOLLOWING CODES AND SPECIFICATIONS:

   FOURTEENTH EDITION OF THE AISC STEEL CONSTRUCTION MANUAL LATEST EDITION OF THE ANSI/AWS D1.1

2. STRUCTURAL STEEL MATERIALS SHALL COMPLY WITH THE FOLLOWING SPECIFICATIONS:

WIDE FLANGE	ASTM A992
ANGLES, PLATES, BARS, CHANNELS	ASTM A36 U.N.O.
PIPES	ASTM A53 GR B
HSS (RECTANGULAR OR SQUARE)	ASTM A500 GR B (Fy = 46 KSI) OR GR C (Fy = 50 KSI)
HSS (ROUND)	ASTM A500 GR B (Fy = 42 KSI) OR GR C (Fy = 46 KSI)
ANCHOR RODS	ASTM F1554-36 U.N.O
HIGH STRENGTH BOLTS	ASTM F3125 GR A325 OR GR F1852 U.N.O.
HEADED STUD ANCHORS (HSA)	ASTM A108
DEFORMED BAR ANCHORS (DBA)	ASTM A496

3. THE DESIGN OF ALL STEEL CONNECTIONS SHALL BE PERFORMED UNDER THE DIRECT SUPERVISION OF A REGISTERED PROFESSIONAL ENGINEER IN THE STATE WHERE THE PROJECT IS LOCATED, EMPLOYED BY THE FABRICATOR. CALCULATIONS SEALED BY THE FABRICATOR'S PROFESSIONAL ENGINEER MUST BE SUBMITTED IF REQUESTED.
4. STRUCTURAL STEEL NOT EXPOSED TO WEATHER SHALL BE LEFT UNPAINTED UNLESS NOTED OTHERWISE IN THE ARCHITECTURAL DRAWINGS AND/OR SPECIFICATIONS.
5. IT IS THE INTENTION OF THE PLANS AND SPECIFICATIONS THAT SHOP CONNECTIONS BE WELDED OR BOLTED AND THAT FIELD CONNECTIONS BE BOLTED, UNLESS DETAILED OTHERWISE ON THE DRAWINGS.
6. ALL TYPICAL BEAM SIMPLE CONNECTIONS SHALL BE STANDARD DOUBLE ANGLE OR SINGLE ANGLE FRAMED BEAM CONNECTIONS UNLESS NOTED OTHERWISE, SHEAR TAB CONNECTIONS MAY BE USED AT LOCATIONS WHERE DOUBLE ANGLE CONNECTIONS ARE NOT POSSIBLE. SEATED BEAM CONNECTIONS SHALL NOT BE USED UNLESS INDICATED ON THE DRAWINGS. PROVIDE FULL DEPTH SHEAR TAB IF BEAM FRAMES ON ONLY ONE SIDE OF A GIRDER.
7. DESIGN CONNECTIONS OF NON-COMPOSITE BEAMS TO SUPPORT A REACTION R (UNLESS SPECIFIED OTHERWISE) EQUAL TO ONE HALF THE TOTAL UNIFORM LOAD CAPACITY FROM THE TABLE OF UNIFORM LOAD CONSTANTS IN THE AISC MANUAL.
8. BEAM CONNECTIONS FOR COMPOSITE BEAMS SHALL BE DESIGNED FOR REACTIONS LISTED IN THE TABLE BELOW. ALL VALUES LISTED IN THE TABLE ARE LOAD RESISTANCE FACTOR DESIGN (LRFD).

BEAM SIZE	REACTION	BEAM SIZE	REACTION
W8	30 KIPS	W21	120 KIPS
W10	30 KIPS	W24	140 KIPS
W12	40 KIPS	W27	160 KIPS
W14	50 KIPS	W30	180 KIPS
W16	80 KIPS	W33	200 KIPS
W18	100 KIPS	W36	220 KIPS

9. ADD TO THE REACTION LISTED ABOVE, ANY LOADS OR REACTIONS OF MEMBERS SUPPORTED BY THE BEAM WITHIN THREE FEET OF BEAM END AND THE VERTICAL COMPONENTS OF FORCES IN BRACE MEMBERS FRAMING INTO THE BEAMS.
10. BRACING CONNECTIONS SHALL DEVELOP FULL TENSILE FORCES AT EACH END OF THE BRACING MEMBER UNLESS BRACING FORCES ARE SPECIFIED ON THE DRAWINGS.
11. ALL WELDING SHALL COMPLY TO THE AMERICAN WELDING SOCIETY STANDARD (AWS D1.1). ALL WELDED JOINTS SHALL BE DETAILED AS INDICATED BY THE PREQUALIFIED JOINT DETAILS IN THE STRUCTURAL WELDING CODE. WELD LENGTHS CALLED FOR ON THE PLANS ARE THE NET EFFECTIVE LENGTH REQUIRED. WELD SIZE SHALL BE AISC MINIMUM UNLESS A LARGER SIZE IS NOTED. ALL WELDS SHALL USE MINIMUM E70XX ELECTRODES.
12. ALL WELDING SHALL BE PERFORMED BY A WELDER CERTIFIED IN ACCORDANCE WITH THE AWS STANDARDS.
13. MISCELLANEOUS STEEL CONNECTIONS SHALL BE WELDED ALL AROUND WITH AISC MINIMUM FILLET WELD UNLESS A LARGER WELD IS SPECIFIED. STEEL MEMBERS CONTINUOUSLY ATTACHED SHALL BE STITCH WELDED TOGETHER WITH AISC MINIMUM 2" LONG FILLET WELD AT 12" O.C. UNLESS A LARGER WELD OR DIFFERENT GAGE IS SPECIFIED.
14. ALL BOLTS SHALL BE DESIGNED AS BEARING BOLTS WITH THREADS INCLUDED IN THE SHEAR PLANE. ALL BOLTS SHALL BE NEW AND NOT RE-USED. BOLT HOLES IN STEEL SHALL BE 1/16 INCH LARGER THAN NOMINAL SIZE OF BOLT USED, EXCEPT ANCHOR ROD HOLES. MINIMUM BOLT DIAMETER SHALL BE 3/4 INCH. ALL BOLTS SHALL BE TIGHTENED TO A SNUG-TIGHT POSITION, EXCEPT AT BRACES, MOMENT CONNECTIONS AND CONNECTIONS MARKED AS SLIP CRITICAL (SC) SHALL BE TIGHTENED USING LOAD INDICATING WASHERS OR TENSION BOLTS.
15. SHEAR STUDS AND THEIR INSTALLATION SHALL MEET ALL REQUIREMENTS OF AWS D1.1. STUD DIAMETER AND LENGTH SHALL BE 3/4 INCH DIAMETER X 4-3/16 INCH LONG BEFORE WELDING. STUDS SHALL BE WELDED IN THE FIELD (NOT THE SHOP) USING AUTOMATICALLY TIMED STUD WELDING EQUIPMENT. THE TOP FLANGE OF THE BEAM MUST BE UNPAINTED AND FREE OF HEAVY RUST, MILL SCALE AND OTHER FOREIGN MATERIALS.
16. ALL STEEL EXPOSED TO WEATHER OR OUTSIDE THE BUILDING'S WATERPROOFING, SUCH AS BRICK SHELF ANGLES, SHALL BE HOT-DIPPED GALVANIZED AFTER FABRICATION AS SPECIFIED BY THE STEEL STRUCTURES PAINTING COUNCIL (SSPC). THE ZINC COATING FOR STEEL SHAPES AND PLATES SHALL AVERAGE NOT LESS THAN 2.3 OZ. WITH NO INDIVIDUAL THICKNESS LESS THAN 2.0 OZ.
17. GALVANIZE ALL NUTS, BOLTS, AND WASHERS USED IN THE CONNECTION OF GALVANIZED STEEL.
18. GALVANIZED MEMBERS SHALL HAVE "Z.R.C. COLD GALVANIZING COMPOUND OR APPROVED EQUIVALENT APPLIED TO FIELD WELDED CONNECTIONS. SURFACE AREAS TO RECEIVE COLD GALVANIZING COMPOUND SHALL BE CLEAN OF DIRT AND DEBRIS PRIOR TO COMPOUND APPLICATION. SEE MANUFACTURER'S LITERATURE FOR ADDITIONAL RECOMMENDATIONS.
19. THE APPLICATION OF THE FIREPROOFING TO THE STEEL MEMBERS AND STEEL DECK IS THE RESPONSIBILITY OF THE CONTRACTOR. THE CONTRACTOR MUST ENFORCE THE REQUIREMENTS OF THE MANUFACTURER AND NOT IMPOSE ADDITIONAL LOADS, INCLUDING CONSTRUCTION LIVE LOADS, DURING THE APPLICATION AND CURING OF THE FIREPROOFING.
20. IN ADDITION TO ALL OF THE STEEL INDICATED ON THE DRAWINGS, THE CONTRACTOR SHALL PROVIDE FOR AN ALLOWANCE OF A NET 2 1/2 TONS OF STEEL TO BE FURNISHED, FABRICATED, DETAILED, AND ERECTED DURING THE PROGRESSION OF WORK AS MAY BE DIRECTED BY THE ENGINEER OF RECORD.
21. THE CONTRACTOR SHALL MAKE AN ALLOWANCE FOR THE ADJUSTMENT AND DETAILING OF STEEL DURING THE SHOP DRAWING REVIEW PROCESS.

H. OPEN WEB STEEL JOISTS AND JOIST GIRDERS

1. OPEN WEB STEEL JOISTS AND JOIST GIRDERS SHALL BE DESIGNED, MANUFACTURED, AND ERECTED PER THE CURRENT APPLICABLE ISSUE OF THE STANDARD SPECIFICATIONS FOR STEEL JOISTS (K SERIES), LONGSPAN STEEL JOISTS (LH SERIES), OR DEEP LONGSPAN JOISTS (DLH SERIES), OR SUPER LONGSPAN STEEL INSTITUTE AND AISC.
2. JOISTS AND JOIST GIRDERS SHALL BE CAMBERED FOR REALISTIC DEAD LOAD. PROVIDE STANDARD SJI CAMBER UNLESS SPECIFIED OTHERWISE ON THE DRAWINGS.
3. TOP CHORD OF JOISTS SHALL BE DOUBLE ANGLES OR TEES. PROVIDE TOP CHORD EXTENSIONS WHERE SHOWN ON THE DRAWINGS. JOISTS AND JOIST GIRDERS WITH BOTTOM CHORD EXTENSIONS SHALL NOT HAVE END CONNECTIONS MADE TO COLUMN STABILIZER PLATE.
4. PROVIDE FLAT BEARING FOR ALL JOISTS AND JOIST GIRDERS. PROVIDE SJI STANDARD DEPTH OF BEARING FOR ALL JOISTS AND JOIST GIRDERS. IF SUFFICIENT BEARING DOES NOT EXIST, STAGGER THE END OF EACH JOIST AND CENTER OF BEARING OVER THE CENTER OF SUPPORT. WHERE K SERIES JOISTS BEAR ON THE SAME BEAM AS LH AND DLH JOISTS, THE K SERIES JOIST SEATS SHALL MATCH THE DEPTH OF THE LH OR DLH JOIST SEATS.
5. COORDINATION OF ALL JOIST SEAT DEPTHS WITH STRUCTURAL STEEL ELEVATIONS SHALL BE THE RESPONSIBILITY OF THE CONTRACTOR AND STEEL FABRICATOR.
6. JOISTS AND JOIST GIRDERS SHALL BE SHOP PAINTED PER ARCHITECTURAL SPECIFICATIONS.
7. ALL JOISTS SHALL CARRY THE DESIGN LOADS AS SPECIFIED IN THE SJI LOAD TABLES AS THE MINIMUM REQUIREMENT. ADDITIONALLY, THE JOISTS SHALL BE DESIGNED TO CARRY ANY OTHER LOAD TYPES AND PATTERNS INDICATED ON THE STRUCTURAL DRAWINGS. REFER TO THE STRUCTURAL DRAWINGS FOR ANY OTHER LOADS REQUIRED TO BE CARRIED BY ANY JOIST.
8. STEEL JOIST MANUFACTURER SHALL SUBMIT SHOP DRAWINGS AND CALCULATIONS SEALED BY AN ENGINEER LICENSED IN THE STATE OF TEXAS. JOIST DESIGNS AND DRAWINGS SHALL INCLUDE BRIDGING AND OTHER MISCELLANEOUS ITEMS AS REQUIRED.
9. **9.** WHERE UPLIFT FORCES ARE A DESIGN CONSIDERATION, ROOF JOISTS SHALL BE ANCHORED TO RESIST SUCH FORCES. ROOF JOISTS SHALL BE DESIGNED FOR A NET UPLIFT PRESSURE SHOWN ON S103.

PROFESSIONAL SEAL

Matrix Structural Engineers
TBPE Firm Registration No. F-2640

STATE OF TEXAS
JAYNOOL A. KHAYRATTEE
66260
REGISTERED PROFESSIONAL ENGINEER
01/14/2020

LOGO/CONTACT

MATRIX STRUCTURAL ENGINEERS
5177 Richmond Avenue, Suite 670
Houston, TX 77046-2401
Tel: 713.664.0130
Fax: 713.664.1370
MSE - 18135

DESIGN TEAM

Architectural
Martinez Architects

Civil Engineer
Maverick Engineering

Structural
Matrix Structural engineers

MEP
DBR

Landscaping
KDC Associates

FIRE STATION #11
CITY OF MIDLAND
Briarwood Ave & Golden Gate Dr
Midland, TX 79707

PROJECT No: **MA 18017**
DATE: **01/14/2020**

ISSUE

100% DESIGN DEVELOPMENT
22-MAY-2019

75% CONSTRUCTION DOCUMENT
26-JUN-2019

100% ISSUE FOR PERMIT
30-JUL-2019

100% ISSUE FOR APPROVAL TO BID
16-JAN-2020

GENERAL NOTES

S101

4.1406

I. STEEL FLOOR DECK (NON-COMPOSITE METAL DECK)

1. THE DESIGN, FABRICATION, AND ERECTION OF ALL FLOOR DECK SHALL CONFORM TO THE STEEL DECK INSTITUTE DESIGN MANUAL FOR COMPOSITE DECKS, FORM DECKS, AND ROOF DECKS AS PUBLISHED BY THE STEEL DECK INSTITUTE (SDI).
2. STEEL DECK SHALL BE MANUFACTURED FROM STEEL CONFORMING TO ASTM A 653-94, STRUCTURAL QUALITY GRADE 33 OR HIGHER (60 KSI FOR 0.6C, 1.0C, 1.3C, AND 1.5 C24). SHEET METAL ACCESSORIES SHALL CONFORM TO ASTM A653-94, STRUCTURAL QUALITY.
3. STEEL DECK SHALL BE GALVANIZED WITH A PROTECTIVE ZINC COATING CONFORMING TO ASTM A 653-94 G60 CLASS.
4. MINIMUM BEARING OF STEEL DECK ON SUPPORTS SHALL BE 2 INCHES. SHEETS SHALL BE ATTACHED TO ALL SUPPORTING STEEL MEMBERS BY WELDING AS INDICATED ON THE DRAWINGS AND IN ACCORDANCE WITH MANUFACTURER'S RECOMMENDATIONS. UPON COMPLETION OF ERECTION, ALL WELDS ON STEEL DECK AREAS EXPOSED TO WEATHER SHALL BE DE-SLAGGED, CLEANED AND TOUCHED-UP WITH A ZINC RICH PRIMER.
5. DECK ENDS SHALL BE BUTTED OVER SUPPORTS.
6. METAL DECK SPANS SHALL NOT EXCEED THE MAXIMUM CENTER TO CENTER SPANS AS REQUIRED BY SDI CRITERIA. WHERE POSSIBLE, ALL METAL DECK SHALL EXTEND OVER THREE OR MORE SUPPORTS. TWO SPAN DECK SHALL BE USED ONLY WHERE DECK LAYOUT DOES NOT PERMIT THE USE OF THREE SPANS. SINGLE SPAN DECK IS NOT PERMITTED. ALL DECK SHALL BE DESIGNED AS UNSHORED CONSTRUCTION UNLESS NOTED OTHERWISE.
7. THE USE OF ADMIXTURES IN CONCRETE CONTAINING CHLORIDE SALTS SHALL NOT BE PERMITTED FOR METAL DECK CONCRETE.
8. THE GENERAL CONTRACTOR SHALL INCLUDE IN HIS BID ADDITIONAL CONCRETE REQUIRED FOR METAL DECK SLABS TO ACCOUNT FOR DECK DEFLECTION.
9. WELDING WASHERS SHALL BE USED ON ALL DECK UNITS WITH METAL THICKNESS LESS THAN 0.028 INCHES THICK. WELDING WASHERS SHALL BE A MINIMUM THICKNESS OF 0.0568 INCHES AND HAVE A NOMINAL 3/8 INCH DIAMETER HOLE. WHERE WELDING WASHERS ARE NOT REQUIRED, WHERE WELDING WASHERS ARE NOT REQUIRED A NOMINAL 5/8 INCH DIAMETER PUDDLE WELD SHALL BE USED. WELD METAL SHALL PENETRATE ALL LAYERS OF DECK MATERIAL AT END LAPS AND SIDE JOINTS AND SHALL HAVE GOOD FUSION TO THE SUPPORTING MEMBERS.
10. OPENINGS LESS THAN 6 INCHES SQUARE OR DIAMETER REQUIRE NO REINFORCEMENT. OPENINGS 6 INCHES TO 10 INCHES INCLUSIVE SHALL BE REINFORCED WITH A 20 GAUGE GALVANIZED PLATE WELDED TO THE DECK AT EACH CORNER AND 6 INCH MAXIMUM CENTERS WITH 5/8 INCH DIAMETER PUDDLE WELD OR SHEET METAL SCREWS. OPENINGS OVER 10 INCHES WIDE OR DIAMETER SHALL BE REINFORCED WITH AN ANGLE 2 1/2 X 2 1/2 X 1/4 FRAMING EACH SIDE OF THE OPENING AND SPANNING BETWEEN SUPPORTS FOR SPANS 4 FEET BUT LESS THAN 6 FEET. LARGER OPENINGS SHALL BE REFERRED TO THE ENGINEER OR RECORD FOR FRAMING.
11. METAL DECK MANUFACTURER SHALL FURNISH SHEET METAL CLOSURES AT ALL SLAB EDGES, COLUMNS, WALLS, AND OPENINGS UNLESS STEEL ANGLES OR PLATES ARE SPECIFIED IN DETAILS ON THE DRAWINGS. SUCH CLOSURES SHALL BE MINIMUM 14 GAGE COLD FORMED STEEL WELDED TO EDGE SUPPORTS WITH 1 INCH LONG WELD AT 12" MAXIMUM CENTERS. PROVIDE 2" MINIMUM BEARING OVER STEEL SUPPORT. CLOSURES AND SUPPORT WELDS SHALL BE DESIGNED TO SUPPORT THE WET CONCRETE WEIGHT AND A 150 POUND CONCENTRATED LOAD ACTING AT THE SLAB EDGE WITHOUT EXCEEDING A STRESS OF 0.8 FY; AND THE WET CONCRETE WEIGHT ALONE WITHOUT EXCEEDING A STRESS OF 0.6 FY AND A DEFLECTION OF 3/4" MAXIMUM. PROVIDE SHEET METAL CLOSURES FOR OPEN ENDS OF PANELS WHERE DECK STOPS OR CHANGES DIRECTION.

J. STEEL ROOF DECK (WITH RIGID INSULATION BOARD)

1. THE STEEL ROOF DECK SHALL BE OF THE TYPE AND GAUGE CALLED FOR ON DRAWINGS. STEEL DECK SHALL BE MANUFACTURED FROM STEEL CONFORMING TO ASTM A653 STRUCTURAL QUALITY GRADE 33 OR HIGHER. THE DESIGN, FABRICATION, AND ERECTION OF ALL ROOF DECK SHALL CONFORM TO THE SDI MANUAL FOR COMPOSITE DECKS, FORM DECKS, AND ROOF DECKS.
2. STEEL DECK SHALL BE GALVANIZED WITH A PROTECTIVE ZINC COATING CONFORMING TO ASTM A653-G90.
3. MINIMUM BEARING OF STEEL DECK ON SUPPORTS SHALL BE 2 INCHES. ALL 3 IN DEEP STEEL DECK SHALL HAVE A MINIMUM BEARING OF 3 INCHES. END LAPS OF SHEETS SHALL BE A MINIMUM OF 2 INCHES AND SHALL OCCUR OVER SUPPORTS. SHEETS SHALL BE ATTACHED TO SUPPORTING STEEL MEMBERS BY WELDING AS INDICATED ON THE DRAWINGS AND IN ACCORDANCE WITH MANUFACTURER'S RECOMMENDATIONS. UPON COMPLETION OF ERECTION, ALL WELDS ON STEEL DECK SHALL BE DE-SLAGGED, CLEANED, AND TOUCHED UP WITH A ZINC RICH PRIMER.
4. PROVIDE ROOF DECK CONSTRUCTION WHICH IS LISTED AND CONFORMS TO THE UL FIRE RESISTANCE DIRECTORY AND BUILDING MATERIALS DIRECTORY. DECK ATTACHMENT SHALL BE INCREASED ABOVE THE MINIMUM SPECIFIED HEREIN AS REQUIRED TO ACHIEVE A CLASS 90 UPLIFT RATING.
5. DECK SUPPORTED ON COLD-FORMED STEEL FRAMING SHALL BE ATTACHED TO EACH SUPPORT MEMBER USING #12 TEK SCREWS AT ALL RIBS WHERE SIDES LAP AND EACH RIB IN BETWEEN.
6. PROVIDE MINIMUM 20 GAUGE RIDGE AND VALLEY PLATES, MINIMUM 20 GAUGE CANT STRIPS, MINIMUM 14 GAUGE SUMP PANS, MINIMUM 20 GAUGE INSIDE OR OUTSIDE CLOSURE CHANNELS, MINIMUM 20 GAUGE BUTT STRIPS AT CHANGE OF DECK DIRECTIONS, MINIMUM 20 GAUGE FILLER SHEETS, AND RUBBER CLOSURES AS REQUIRED TO PROVIDE A FINISHED SURFACE FOR THE APPLICATION OF INSULATION AND ROOFING.
7. DO NOT HANG LOADS FROM METAL DECK. PROVIDE ENGINEERED STRUCTURAL SYSTEM TO HANG ALL LOADS FROM STEEL JOISTS OR BEAMS. THIS INCLUDES BUT IS NOT LIMITED TO METAL STUD SOFFIT OR CEILING FRAMING, MECHANICAL OR PLUMBING EQUIPMENT, ETC.
8. SEE ARCHITECTURAL, MECHANICAL, ELECTRICAL, ETC., FOR SIZES AND LOCATIONS OF DECK OPENINGS AND FOR DECK OPENINGS SMALLER THAN 10 INCHES NOT SHOWN ON THE STRUCTURAL DRAWINGS. ROOF OPENINGS LESS THAN 6 INCHES SQUARE OR DIAMETER REQUIRE NO REINFORCEMENT. OPENINGS 6 INCHES TO 10 INCHES INCLUSIVE SHALL BE REINFORCED WITH A 20 GAUGE GALVANIZED PLATE WELDED TO THE DECK AT EACH CORNER AND 6 INCHES O.C. WITH 5/8 INCH DIAMETER PUDDLE WELDS OR SHEET METAL SCREWS. SEE TYPICAL DETAILS FOR FRAMING REQUIREMENTS AT OPENINGS LARGER THAN 10 INCHES. OPENINGS LARGER THAN 6 FEET SHALL BE REFERRED TO THE ENGINEER FOR FRAMING.
9. METAL DECK SPANS SHALL NOT EXCEED THE MAXIMUM CENTER TO CENTER SPANS AS REQUIRED BY SDI. WHERE POSSIBLE, ALL METAL DECK SHALL EXTEND OVER THREE OR MORE SUPPORTS. TWO SPAN DECK SHALL BE USED ONLY WHERE DECK LAYOUT DOES NOT PERMIT THE USE OF THREE SPANS. SINGLE SPAN DECK IS NOT PERMITTED.

K. COLD-FORMED STEEL

1. ALL ASPECTS OF WORK RELATING TO COLD-FORMED (LIGHT GAGE) STEEL CONSTRUCTION SHALL CONFORM TO THE FOLLOWING CODES AND SPECIFICATIONS:

   2012 EDITION OF THE AISI SPECIFICATION FOR THE DESIGN OF COLD-FORMED STEEL STRUCTURAL MEMBERS, INCLUDING THE 2010 SUPPLEMENT
2. COLD-FORMED STEEL MEMBERS SHALL BE OF THE SIZE, GAUGE, AND SPACING SHOWN ON THE DRAWINGS. FLANGE WIDTHS SHALL BE 1 5/8" WITH 1/2" RETURNS UNLESS SPECIFIED OTHERWISE.
3. ALL FRAMING MEMBERS SHALL BE MANUFACTURED FROM CORROSION RESISTANT STEEL CONFORMING TO ASTM A653 (G60). 25 GAUGE THROUGH 18 GAUGE MEMBERS SHALL BE FORMED FROM STEEL HAVING A MINIMUM 33 KSI YIELD POINT PER ASTM A653 GRADE 33. 16 GAUGE THROUGH 12 GAUGE MEMBERS SHALL BE FORMED FROM STEEL HAVING A MINIMUM 50 KSI YIELD POINT PER ASTM A446 GRADE 50.
4. SPLICES IN FRAMING COMPONENTS EXCEPT RUNNERS AND TRACKS SHALL NOT BE PERMITTED.
5. AT LOAD BEARING WALLS SUPPORTING FLOOR OR ROOF JOISTS, LOCATE STUDS DIRECTLY UNDER THE JOISTS OR PROVIDE LOAD DISTRIBUTING MEMBER BETWEEN STUDS TO SUPPORT JOISTS.
6. FASTENING OF COMPONENTS SHALL BE WITH SELF-DRILLING SCREWS OR WELDING. WELDING SHALL BE DONE USING FILLET, PLUG, BUTT OR SEAM WELDS WITH A MINIMUM 3/32 IN. AWS TYPE 6013 WELDING RODS. WELD AREAS SHOULD BE RE-TOUCHED WITH THE APPROPRIATE PAINT OR COLD-GALVANIZING TO RETAIN CORROSION RESISTANCE. ALL WORK SHALL BE COMPLETED BY QUALIFIED WELDERS IN ACCORDANCE WITH AWS D1.3 STANDARDS.
7. PROVIDE HORIZONTAL BRIDGING IN ALL STUD SYSTEMS AT 4'-0" O.C. VERTICALLY FOR AXIALLY LOADED STUDS AND AT 6'-0" O.C. FOR NON-LOAD BEARING STUDS. WELD AT EACH STUD INTERSECTION.
8. SCREWS SHALL BE SELF-DRILLING AND OF TYPE S-12, ASTM C-954, EXCEPT THAT TYPE S, ASTM C-1002 MAY BE USED FOR 20 GAUGE OR 22 GAUGE MATERIAL ONLY. SCREWS SHALL BE 3/8" TO 1/2" LONGER THAT TOTAL MATERIAL THICKNESS.
9. SHEATHING MATERIALS FOR SHEAR WALLS MUST EXTEND AND BE CONNECTED TO THE TOP AND BOTTOM TRACKS.
10. STEEL STRUCTURAL STUD TRACK OF THE SAME GAUGE AS THE STUDS SHALL BE USED AT THE TOP AND BOTTOM OF ALL STUD WALLS UNLESS NOTED OTHERWISE. STUDS SHALL SIT FLAT AGAINST THE WEB OF THE STUD TRACK AND BE ATTACHED WITH 1-#8 X 5/8" SCREW EACH SIDE OF EACH STUD.
11. WEB PUNCH-OUTS SHOULD BE COORDINATED WITH BRACING AND UTILITY REQUIREMENTS. WEB PUNCH-OUTS OR WEB OPENINGS SHALL BE LOCATED A MINIMUM OF 6" OR MEMBER DEPTH, WHICHEVER IS GREATER, FROM STUD OR JOIST BEARING POINTS.
12. ALL FRAMING COMPONENTS SHALL BE CUT SQUARELY FOR ATTACHMENT TO PERPENDICULAR MEMBERS, OR AS REQUIRED FOR AN ANGULAR FIT AGAINST ABUTTING MEMBERS.
13. FOR NON-LOAD BEARING STUDS, CONNECTIONS SHALL ACCOUNT FOR THE DEFLECTION OF THE STRUCTURAL MEMBERS TO WHICH THE STUDS ARE ATTACHED (1/2" MINIMUM). PROVIDE SLIDING CLIPS AND/OR SLIP TRACKS.
14. JACK STUDS OR CRIPPLES SHALL BE INSTALLED BELOW WINDOW SILLS, ABOVE WINDOW AND DOOR HEADS, AND ELSEWHERE TO FURNISH SUPPORT, AND SHALL BE SECURELY ATTACHED TO CONNECTING MEMBERS.
15. PRIOR TO FABRICATION, THE CONTRACTOR SHALL SUBMIT ERECTION DRAWINGS TO THE ARCHITECT AND ENGINEER OF RECORD FOR REVIEW AND APPROVAL.
16. TRACK SHALL BE SECURELY ANCHORED TO THE SUPPORTING STRUCTURE. ABUTTING PIECES OF TRACK SHALL BE SECURELY SPLICED TOGETHER.
17. THE DESIGN OF ALL COLD-FORMED STEEL SHALL BE PERFORMED BY THE COLD-FORMED METAL CONTRACTOR. THE DESIGN SHALL INCLUDE MEMBER SIZES AND CONNECTION. THE DESIGN SHALL CONSIDER MEMBER DIMENSIONS NOTED ON THE DRAWINGS. THE COLD-FORMED CONTRACTOR SHALL SUPPLY DRAWINGS SEALED BY AN ENGINEER REGISTERED IN THE STATE WHERE THE PROJECT IS LOCATED. THE OUT-OF-PLANE DEFLECTION OF STUDS SHALL BE LIMITED TO H/600 (H = UNSUPPORTED HEIGHT OF STUDS) IF USED FOR MASONRY OR STONE BACKUP. FOR OTHER CONDITIONS THE DEFLECTION SHALL BE LIMITED TO H/360.
18. COLD-FORMED STEEL FRAMING SHALL HAVE A MINIMUM BASE METAL THICKNESS OF 0.43 (18 GA.) IF USED FOR MASONRY OR STONE BACKUP.
19. DO NOT HANG STUD FRAMING FROM METAL DECK ROOF. FRAMING SHALL BE SUPPORTED BETWEEN ROOF FRAMING MEMBERS.

L. CONCRETE MASONRY

1. ALL MASONRY MATERIALS AND CONSTRUCTION SHALL CONFORM TO THE RECOMMENDATIONS OF THE NATIONAL CONCRETE MASONRY ASSOCIATION AND THE FOLLOWING CODES AND SPECIFICATIONS:

   ACI 530-13 BUILDING CODE REQUIREMENTS AND SPECIFICATION FOR MASONRY STRUCTURES
2. ALL CONCRETE MASONRY UNITS (CMU) SHALL CONFORM TO ASTM C90. UNLESS SPECIFIED OTHERWISE, CMU SHALL BE LIGHTWEIGHT (LESS THAN 110 PCF, OVEN DRY UNIT WEIGHT). THE MINIMUM COMPRESSIVE STRENGTH OF MASONRY (F'M) SHALL BE 2000 PSI AS DETERMINED BY THE UNIT STRENGTH METHOD OR BY THE PRISM TEST METHOD.
3. UNLESS SPECIFIED OTHERWISE, ALL MORTARS AND THE MATERIALS THEREIN SHALL CONFORM TO THE STANDARD SPECIFICATIONS OF MASONRY UNITS, ASTM C270, TYPE S EXCEPT FOR MASONRY IN CONTACT WITH THE EARTH SHALL BE TYPE M. MORTAR SHALL HAVE MINIMUM AVERAGE STRENGTH OF 2000 PSI FOR TYPE M, OR S.
4. ALL GROUT SHALL BE FINE GROUT CONTAINING SAND, PORTLAND CEMENT, AND LIME (OPTIONAL) FOR GROUT SPACES LESS THAN 2 INCHES IN ANY HORIZONTAL DIRECTION, UNLESS SPECIFIED OTHERWISE. GROUT SHALL ATTAIN A MINIMUM 28 DAYS COMPRESSIVE STRENGTH OF 2500 PSI TESTED ACCORDING TO ASTM C476.
5. CONTROL JOINTS SHALL BE LOCATED PER ARCHITECTURAL DRAWINGS AND SPECIFICATIONS OR AT A MAXIMUM SPACING OF 24 FEET ON CENTERS OR 3 TIMES THE WALL HEIGHT, WHICHEVER IS LESS. ALL MASONRY UNITS SHALL BE PLACED IN RUNNING BOND.
6. PROVIDE HORIZONTAL JOINT REINFORCING (TRUSS OR LADDER TYPE, 9 GAUGE) AT 16 INCHES ON CENTER FOR ALL CMU WALLS LAID IN A RUNNING BOND AND AT 8 INCHES ON CENTER FOR ALL CMU WALL NOT LAID IN A RUNNING BOND. HORIZONTAL JOINT REINFORCING SHALL BE LAPPED A MINIMUM OF 6". REINFORCEMENT SHALL CONFORM TO ASTM A951 AND SHALL BE HOT DIP GALVANIZED IN ACCORDANCE WITH ASTM A153.
7. ALL HORIZONTAL REINFORCING STEEL IN BOND BEAMS AND LINTEL BLOCK UNITS SHALL BE CONTINUOUS AND UNITS SHALL BE SOLID GROUTED. PROVIDE 48 TIMES BAR DIAMETER LAP FOR HORIZONTAL REINFORCING IN BOND BEAMS. NO SPLICES SHALL BE PROVIDED FOR HORIZONTAL REINFORCING IN BLOCK LINTELS.
8. GROUT CELLS SOLID WHERE VERTICAL BARS ARE SHOWN ON THE DRAWINGS. VERTICAL BARS SHALL EXTEND FROM BOTTOM TO THE TOP OF THE WALL. AT EACH VERTICAL BAR, PROVIDE MATCHING BAR SIZE DOWEL INTO FOUNDATIONS. PROVIDE MINIMUM 48 TIMES BAR DIAMETER SPLICE FOR VERTICAL BARS WHERE REQUIRED AND/OR SHOWN ON THE DRAWINGS UNLESS NOTED OTHERWISE.
9. GROUT LIFTS SHALL TERMINATE TO FORM A GROUT KEY A MINIMUM OF 1 1/2" BELOW MORTAR JOINTS WHEN SUBSEQUENT GROUT LIFTS WILL HAPPEN AFTER PREVIOUS GROUT LIFTS HAVE SET. GROUT KEYS IN BOND BEAMS OR LINTELS SHALL NOT BE PERMITTED.
10. MAXIMUM GROUT POUR HEIGHT SHALL BE 5' - 4" (8 BLOCK COURSES).
11. PROVIDE A BOND BEAM AT THE TOP OF ALL CMU WALLS AND REINFORCE WITH (2) - #5 CONTINUOUS UNLESS NOTED OTHERWISE. BOND BEAM REINFORCING SHALL NOT BE CONTINUED THROUGH CONTROL JOINT LOCATIONS.
12. PROVIDE BOND BEAMS AT A MAXIMUM OF 48 INCHES ON CENTER IN ALL EXTERIOR AND LOAD BEARING CMU WALLS NOT LAID IN A RUNNING BOND (E.G. STACK BOND) REINFORCED WITH (2) - #5 CONTINUOUS UNLESS NOTED OTHERWISE BOND BEAM REINFORCEMENT SHALL BE DISCONTINUED AT CONTROL JOINTS.
13. AT THE END OF EACH DAY AND DURING INCLEMENT WEATHER, ALL UNFINISHED MASONRY WORK SHALL BE COVERED AT THE TOP OF WALL AND EXTEND DOWN ALL SIDES A MINIMUM OF 24".
14. SEE TYPICAL DETAILS FOR INTERIOR WALL HEIGHT, BRACINGS AND REINFORCING REQUIREMENTS.
15. MECHANICAL PIPES AND ELECTRICAL CONDUITS WHICH PASS THROUGH MASONRY WALLS DO NOT REQUIRE SLEEVES, UNLESS NOTED OTHERWISE IN THE PROJECT SPECIFICATIONS, MECHANICAL OR ELECTRICAL DRAWINGS. IF SLEEVES ARE REQUIRED, INSTALL SLEEVES BEFORE GROUTING. DO NOT CUT ANY REINFORCING WHICH MAY INTERFERE WITH SLEEVE PLACEMENT. CORING OPENINGS IN GROUTED MASONRY IS NOT PERMITTED. NOTIFY THE STRUCTURAL ENGINEER IN ADVANCE OF CONDITIONS NOT SHOWN ON THE STRUCTURAL DRAWINGS. NO PIPES OR ELECTRICAL CONDUIT SHALL PASS THROUGH MASONRY LINTELS UNLESS SPECIFICALLY DETAILED.
16. FOR ANCHORED MASONRY VENEER, THE DISTANCE BETWEEN THE INSIDE FACE OF THE VENEER AND THE COLD-FORMED STEEL, MASONRY, WOOD, OR CONCRETE BACKUP SHALL BE AS SPECIFIED BY THE ARCHITECT, BUT NOT GREATER THAN 4 1/2". A MINIMUM 1 INCH AIR SPACE SHALL BE PROVIDED.
17. ANCHORED MASONRY VENEER NOT LAID IN A RUNNING BOND SHALL HAVE A JOINT REINFORCEMENT OF AT LEAST ONE WIRE, OF SIZE W1.7, SPACED AT A MAXIMUM OF 18 INCHES ON CENTER VERTICALLY.
18. SPECIAL INSPECTION. IN ACCORDANCE WITH THE BUILDING CODE REFERENCED ABOVE, SHALL BE PROVIDED FOR ALL CMU WALLS.

M. SUBMITTALS

1. THE GENERAL CONTRACTOR SHALL SUBMIT FOR ENGINEER REVIEW SHOP DRAWINGS FOR THE FOLLOWING ITEMS:

   CONCRETE MIX DESIGNS
   REINFORCING STEEL
   STRUCTURAL STEEL (*,^)
   METAL DECK
   BAR JOISTS (^)
   MISCELLANEOUS STEEL
   STEEL STAIR (*,^)
   CONCRETE MASONRY (MATERIAL AND REBAR PLACEMENT PLANS)

   ITEMS MARKED (*) SHALL HAVE SHOP DRAWINGS SEALED BY A REGISTERED ENGINEER IN THE STATE WHERE THE PROJECT IS LOCATED. ITEMS MARKED (#) SHALL BE SUBMITTED TO ENGINEER FOR OWNER'S RECORD ONLY AND WILL NOT HAVE ENGINEER'S SHOP DRAWING STAMP. ITEMS MARKED (^) SHALL HAVE SEALED STRUCTURAL CALCULATIONS SUBMITTED TO ENGINEER FOR OWNER'S RECORD.
2. ALL SHOP DRAWINGS MUST BE REVIEWED AND SEALED BY THE GENERAL CONTRACTOR PRIOR TO SUBMITTAL.
3. CONTRACTOR SHALL SUBMIT ELECTRONIC COPIES (E.G. PDFS) OF ALL SHOP DRAWINGS SPECIFIED TO BE RETURNED BY THE ENGINEER.
4. THE OMISSION FROM THE SHOP DRAWINGS OF ANY MATERIAL REQUIRED BY THE CONTRACT DOCUMENTS TO BE FURNISHED SHALL NOT RELIEVE THE CONTRACTOR OF THE RESPONSIBILITY OF FURNISHING AND INSTALLING SUCH MATERIALS, REGARDLESS OF WHETHER THE SHOP DRAWINGS HAVE BEEN REVIEWED AND APPROVED.
5. SUBMIT TWO COPIES OF MANUFACTURER'S LITERATURE FOR ALL MATERIALS AND PRODUCTS USED IN CONSTRUCTION ON THE PROJECT.
6. THE USE OF REPRODUCTIONS OF THESE CONTRACT DOCUMENTS BY ANY CONTRACTOR, SUBCONTRACTOR, ERECTOR, FABRICATOR, OR MATERIAL SUPPLIER IN LIEU OF PREPARATION OF SHOP DRAWINGS SIGNIFIES HIS ACCEPTANCE OF ALL INFORMATION SHOWN HEREIN AS CORRECT, AND OBLIGATES HIMSELF TO ANY JOB EXPENSE, REAL OR IMPLIED, ARISING DUE TO ANY ERRORS THAT MAY OCCUR HEREIN.

N. SPECIAL INSPECTION

1. ALL ASPECTS OF WORK RELATING TO SPECIAL INSPECTION SHALL CONFORM TO THE FOLLOWING CODES AND SPECIFICATIONS:

   2015 INTERNATIONAL BUILDING CODE (CHAPTER 17).
2. THE OWNER'S SPECIAL INSPECTOR SHALL BE A QUALIFIED PERSON WHO SHALL DEMONSTRATE COMPETENCE, TO THE SATISFACTION OF THE BUILDING OFFICIAL, FOR INSPECTION OF THE PARTICULAR TYPE OF CONSTRUCTION OR OPERATION REQUIRING SPECIAL INSPECTION.
3. PRIOR TO THE BEGINNING OF CONSTRUCTION, THE ARCHITECT (OR ENGINEER) SHALL CALL A PRE-CONSTRUCTION MEETING WITH THE ARCHITECT, ENGINEER, BUILDING OFFICIAL, CONTRACTOR AND SPECIAL INSPECTORS TO REVIEW THE SPECIAL INSPECTION REQUIREMENTS.
4. DUTIES OF THE OWNER'S SPECIAL INSPECTOR INCLUDE (BUT ARE NOT LIMITED TO):
   A. ACKNOWLEDGE THE SPECIAL INSPECTION AND TESTING AGREEMENT PROVIDED BY THE LOCAL JURISDICTION.
   B. THE OWNER'S SPECIAL INSPECTOR SHALL OBSERVE THE WORK FOR CONFORMANCE WITH THE APPROVED CONSTRUCTION DOCUMENTS. ALL DISCREPANCIES SHALL BE BROUGHT TO THE IMMEDIATE ATTENTION OF THE CONTRACTOR FOR CORRECTION, THEN, IF UNCORRECTED TO THE REGISTERED DESIGN PROFESSIONAL IN RESPONSIBLE CHARGE AND TO THE BUILDING OFFICIAL.
   C. THE OWNER'S SPECIAL INSPECTOR SHALL FURNISH INSPECTION REPORTS FOR EACH INSPECTION TO THE BUILDING OFFICIAL, ARCHITECT, REGISTERED DESIGN PROFESSIONAL IN RESPONSIBLE CHARGE, CONTRACTOR AND (OTHER DESIGNATED PARTIES), IN A TIMELY MANNER, AS ESTABLISHED AT THE PRE-CONSTRUCTION MEETING.
   D. THE OWNER'S SPECIAL INSPECTOR SHALL SUBMIT A FINAL REPORT STATING WHETHER THE WORK REQUIRING SPECIAL INSPECTION WAS, TO THE BEST OF THE SPECIAL INSPECTOR'S KNOWLEDGE, IN CONFORMANCE WITH THE APPROVED CONSTRUCTION DOCUMENTS AND THE APPLICABLE WORKMANSHIP PROVISIONS OF THE INTERNATIONAL BUILDING CODE.
5. DUTIES OF THE CONTRACTOR INCLUDE (BUT ARE NOT LIMITED TO):
   A. NOTIFY THE SPECIAL INSPECTOR THAT THE WORK IS READY FOR INSPECTION AT LEAST 24 HOURS BEFORE SUCH INSPECTION.
   B. ALL WORK REQUIRING SPECIAL INSPECTION SHALL REMAIN ACCESSIBLE AND EXPOSED UNTIL IT HAS BEEN OBSERVED AND INDICATED TO BE IN CONFORMANCE BY THE SPECIAL INSPECTOR AND APPROVED BY THE BUILDING OFFICIAL.
   C. PROVIDE THE SPECIAL INSPECTOR WITH ACCESS TO APPROVED CONSTRUCTION DOCUMENTS AT JOBSITE.
   D. MAINTAIN AT THE JOBSITE COPIES OF ALL REPORTS SUBMITTED BY THE SPECIAL INSPECTOR.
6. CONTINUOUS SPECIAL INSPECTION REFERS TO INSPECTIONS BY THE SPECIAL INSPECTOR WHO IS CONTINUOUSLY PRESENT WHEN AND WHERE THE WORK TO BE INSPECTED IS BEING PERFORMED.
7. PERIODIC SPECIAL INSPECTION REFERS TO INSPECTIONS BY THE SPECIAL INSPECTOR WHO IS INTERMITTENTLY PRESENT WHERE THE WORK TO BE INSPECTED HAS BEEN OR IS BEING PERFORMED.
8. SPECIAL INSPECTIONS AND TESTING SHALL BE REQUIRED FOR THE FOLLOWING TYPES OF WORK LISTED BELOW. SPECIAL INSPECTIONS AND TESTING SHALL FOLLOW THE REQUIREMENTS OF THE BUILDING AND MATERIAL CODE REFERENCES AND TABLES. IN THE EVENT OF A CONFLICT BETWEEN REFERENCES, THE OWNER'S SPECIAL INSPECTOR SHALL FOLLOW THE MORE STRINGENT REQUIREMENT.

SOILS	IBC 1705.6 AND TABLE 1705.6, APPROVED GEOTECHNICAL REPORT AND CONSTRUCTION DOCUMENTS
CONCRETE	IBC 1705.3 AND TABLE 1705.3
STEEL	IBC 1705.2 AND TABLE 1705.2.3 AND AISC 360 CHAPTER N AND SDI QA/QC DOCUMENT
SHOP FABRICATION	IBC 1704.2.5 (NOT REQUIRED IF FABRICATOR IS APPROVED IN ACCORDANCE WITH IBC 1704.2.5.1.
MASONRY	IBC 1705.4, TMS 402/ACI 530/ASCE 5 SECTION 3.1 AND TABLE 3.1.3, TMS 602/ACI 530.1/ASCE 6 SECTION 1.6 AND TABLE 5
SPRAYED FIRE-RESISTANT MATERIALS	IBC 1705.14 AND CONSTRUCTION DOCUMENTS
MASTIC AND INTUMESCENT FIRE-RESISTANT COATINGS	IBC 1705.15 AND AWCI 12-B AND CONSTRUCTION DOCUMENTS
EXTERIOR INSULATION AND FINISH SYSTEMS (EIFS)	IBC 1705.16
EXPANSION/EPOXY ANCHORS	MANUFACTURER'S ICC REPORT

O. R-PANEL ROOF DECK

1. THE STEEL ROOF DECK SHALL BE OF THE TYPE AND GAUGE CALLED FOR ON THE DRAWINGS. STEEL DECK SHALL BE MANUFACTURED FROM STEEL CONFORMING TO ASTM A653 OR ASTM A792 STRUCTURAL QUALITY GRADE 50 OR HIGHER. THE DESIGN, FABRICATION, AND ERECTION OF ALL ROOF DECK SHALL CONFORM TO THE SDI MANUAL FOR COMPOSITE DECKS, FORM DECKS, AND ROOF DECKS.
2. STEEL DECK SHALL BE GALVANIZED WITH A PROTECTIVE ZINC COATING CONFORMING TO ASTM A653-G90 OR ACRYLIC COATED GALVALUME CONFORMING TO ASTM A792-AZ50.
3. PROVIDE PURLIN BEARING LEG FOR BEARING OF STEEL DECK ON SUPPORTS. SHEETS SHALL BE ATTACHED TO SUPPORTING STEEL MEMBERS BY FASTENING AS INDICATED ON THE DRAWINGS AND IN ACCORDANCE WITH MANUFACTURER'S RECOMMENDATIONS. BUTYL SEALANT SHALL BE APPLIED AT ALL SIDES AND END LAPS PER MANUFACTURER'S SPECIFICATIONS.
4. PROVIDE ROOF DECK CONSTRUCTION WHICH IS LISTED AND CONFORMS TO THE UL FIRE RESISTANCE DIRECTORY AND BUILDING MATERIALS DIRECTORY. DECK ATTACHMENT SHALL BE INCREASED ABOVE THE MINIMUM SPECIFIED HEREIN AS REQUIRED TO ACHIEVE A CLASS 90 UPLIFT RATING.
5. DO NOT HANG LOADS FROM METAL DECK. PROVIDE ENGINEERED STRUCTURAL SYSTEM TO HANG ALL LOADS FROM STEEL JOISTS OR BEAMS. THIS INCLUDES BUT IS NOT LIMITED TO METAL STUD SOFFIT OR CEILING FRAMING, MECHANICAL OR PLUMBING EQUIPMENT, ETC.
6. SEE ARCHITECTURAL, MECHANICAL, ELECTRICAL, ETC. FOR SIZES AND LOCATIONS OF DECK OPENINGS AND FOR DECK OPENINGS SMALLER THAN 10 INCHES NOT SHOWN ON THE STRUCTURAL DRAWINGS. ROOF OPENINGS LESS THAN 6 INCHES SQUARE OR DIAMETER REQUIRE NO REINFORCEMENT. OPENINGS 6 INCHES TO 10 INCHES INCLUSIVE SHALL BE REINFORCED WITH A 20 GAUGE GALVANIZED PLATE WELDED TO THE DECK AT EACH CORNER AND 6 INCHES O.C. WITH 5/8 INCH DIAMETER PUDDLE WELDS OR SHEET METAL SCREWS. SEE TYPICAL DETAILS FOR FRAMING REQUIREMENTS AT OPENINGS LARGER THAN 10 INCHES. OPENINGS LARGER THAN 6 FEET SHALL BE REFERRED TO THE ENGINEER FOR FRAMING.
7. METAL DECK SPANS SHALL NOT EXCEED THE MAXIMUM CENTER TO CENTER SPANS AS REQUIRED BY SDI. WHERE POSSIBLE, ALL METAL DECK SHALL EXTEND OVER THREE OR MORE SUPPORTS. TWO SPAN DECK SHALL BE USED ONLY WHERE DECK LAYOUT DOES NOT PERMIT THE USE OF THREE SPANS. SINGLE SPAN DECK IS NOT PERMITTED.

4.11407

PROFESSIONAL SEAL
Matrix Structural Engineers
TBPE Firm Registration No. F-2640
JAYNOOL A. KHAYRATTEE
68260
LICENSED
PROFESSIONAL ENGINEER
01/14/2020

LOGO/CONTACT
MATRIX STRUCTURAL ENGINEERS
5177 Richmond Avenue, Suite 670
Houston, TX 77046-2401
Tel: 713.664.0133
Fax: 713.664.1370
MSE - 18135

DESIGN TEAM
Architectural
Martinez Architects
Civil Engineer
Maverick Engineering
Structural
Matrix Structural engineers
MEP
DBR
Landscaping
KDC Associates

FIRE STATION #11
CITY OF MIDLAND
Briarwood Ave & Golden Gate Dr
Midland, TX 79707

PROJECT No: **MA 18017**
DATE: **01/14/2020**

ISSUE
100% DESIGN DEVELOPMENT 22-MAY-2019
75% CONSTRUCTION DOCUMENT 26-JUN-2019
100% ISSUE FOR PERMIT 30-JUL-2019
100% ISSUE FOR APPROVAL TO BID 16-JAN-2020

GENERAL NOTES

S102

P. STRUCTURAL CLAY MASONRY

1. ALL MASONRY MATERIALS AND CONSTRUCTION SHALL CONFORM TO THE RECOMMENDATIONS OF THE NATIONAL CONCRETE MASONRY ASSOCIATION AND THE FOLLOWING CODES AND SPECIFICATIONS:

ACI 530-11 BUILDING CODE REQUIREMENTS AND SPECIFICATION FOR MASONRY STRUCTURES

2. ALL CLAY MASONRY UNITS SHALL CONFORM TO ASTM C34. UNLESS SPECIFIED OTHERWISE. THE MINIMUM COMPRESSIVE STRENGTH OF MASONRY (F'M) SHALL BE 3000 PSI AS DETERMINED BY THE UNIT STRENGTH METHOD OR BY THE PRISM TEST METHOD. CLAY MASONRY SHALL HAVE MINIMUM AVERAGE COMPRESSIVE STRENGTH OF 8250 PSI FOR TYPE M, OR S MORTAR. MAXIMUM SATURATION COEFFICIENT SHALL BE 0.78 TESTED ACCORDING TO ASTM C67. THE INITIAL RATE OF ABSOPRTION SHALL BE A MINIMUM OF 5 GAL./30 SQ. INCHES AND A MAXIMUM OF 30 GAL./30 SQ. INCHES TESTED ACCORDING TO ASTM C67.

3. UNLESS SPECIFIED OTHERWISE, ALL MORTARS AND THE MATERIALS THEREIN SHALL CONFORM TO THE STANDARD SPECIFICATIONS OF MASONRY UNITS, ASTM C270, TYPE S EXCEPT FOR MASONRY IN CONTACT WITH THE EARTH SHALL BE TYPE M.

4. ALL GROUT SHALL BE FINE GROUT CONTAINING SAND, PORTLAND CEMENT, AND LIME (OPTIONAL) FOR GROUT SPACES LESS THAN 2 INCHES IN ANY HORIZONTAL DIRECTION, UNLESS SPECIFIED OTHERWISE. GROUT SHALL ATTAIN A MINIMUM 28 DAYS COMPRESSIVE STRENGTH EQUAL TO F'M BUT SHALL NOT EXCEED 6000 PSI TESTED ACCORDING TO ASTM C476.

5. SUBMIT TEST REPORTS PERFORMED IN ACCORDANCE WITH ASTM C67 FOR EACH TYPE OF CLAY MASONRY SPECIFIED ON CONTRACT DOCUMENTS. TEST REPORTS SHALL INCLUDE"
   A. COMPRESSIVE STRENGTH
   B. MODULUS OF RUPTURE
   C. 24 HOUR COLD WATER ABSORPTION
   D. 5 HOUR BOIL WATER ABSORPTION
   E. SATURATION COEFFICIENT
   F. INITIAL RATE OF ABSORPTION
      E. EFFLORESCENCE (MASONRY EXPOSED TO WEATHER SHALL BE RATED AS "NOT EFFLORESCED"
   H. WEATHER CLASSIFICATION

6. CONTROL JOINTS SHALL BE LOCATED PER ARCHITECTURAL DRAWINGS AND SPECIFICATIONS OR AT A MAXIMUM SPACING OF 24 FEET ON CENTERS OR 3 TIMES THE WALL HEIGHT, WHICHEVER IS LESS. ALL MASONRY UNITS SHALL BE PLACED IN RUNNING BOND.

7. PROVIDE HORIZONTAL JOINT REINFORCING (TRUSS OR LADDER TYPE, 9 GAUGE) AT 16 INCHES ON CENTER FOR ALL CLAY MASONRY WALLS LAID IN A RUNNING BOND AND AT 8 INCHES ON CENTER FOR ALL CLAY MASONRY WALL NOT LAID IN A RUNNING BOND. HORIZONTAL JOINT REINFORCING SHALL BE LAPPED A MINIMUM OF 6". REINFORCEMENT SHALL CONFORM TO ASTM A951 AND SHALL BE HOT DIP GALVANIZED IN ACCORDANCE WITH ASTM A153.

8. ALL HORIZONTAL REINFORCING STEEL IN BOND BEAMS AND LINTEL BLOCK UNITS SHALL BE CONTINUOUS AND UNITS SHALL BE SOLID GROUTED. PROVIDE 48 TIMES BAR DIAMETER LAP FOR HORIZONTAL REINFORCING IN BOND BEAMS. NO SPLICES SHALL BE PROVIDED FOR HORIZONTAL REINFORCING IN BLOCK LINTELS.

9. GROUT CELLS SOLID WHERE VERTICAL BARS ARE SHOWN ON THE DRAWINGS. VERTICAL BARS SHALL EXTEND FROM BOTTOM TO THE TOP OF THE WALL. AT EACH VERTICAL BAR, PROVIDE MATCHING BAR SIZE DOWEL INTO FOUNDATIONS. PROVIDE MINIMUM 48 TIMES BAR DIAMETER SPLICE FOR VERTICAL BARS WHERE REQUIRED AND/OR SHOWN ON THE DRAWINGS UNLESS NOTED OTHERWISE.

10. GROUT LIFTS SHALL TERMINATE TO FORM A GROUT KEY A MINIMUM OF 1 1/2" BELOW MORTAR JOINTS WHEN SUBSEQUENT GROUT LIFTS WILL HAPPEN AFTER PREVIOUS GROUT LIFTS HAVE SET. GROUT KEYS IN BOND BEAMS OR LINTELS SHALL NOT BE PERMITTED.

11. MAXIMUM GROUT POUR HEIGHT SHALL BE 5' - 4" (8 BLOCK COURSES).

12. PROVIDE A BOND BEAM AT THE TOP OF ALL CLAY MASONRY WALLS AND REINFORCE WITH (2) - #5 CONTINUOUS UNLESS NOTED OTHERWISE. BOND BEAM REINFORCING SHALL NOT BE CONTINUED THROUGH CONTROL JOINT LOCATIONS.

13. PROVIDE BOND BEAMS AT A MAXIMUM OF 48 INCHES ON CENTER IN ALL EXTERIOR AND LOAD BEARING CLAY MASONRY WALLS NOT LAID IN A RUNNING BOND (E.G. STACK BOND) REINFORCED WITH (2) - #5 CONTINUOUS UNLESS NOTED OTHERWISE BOND BEAM REINFORCEMENT SHALL BE DISCONTINUED AT CONTROL JOINTS.

14. AT THE END OF EACH DAY AND DURING INCLEMENT WEATHER, ALL UNFINISHED MASONRY WORK SHALL BE COVERED AT THE TOP OF WALL AND EXTEND DOWN ALL SIDES A MINIMUM OF 24".

15. SEE TYPICAL DETAILS FOR INTERIOR WALL HEIGHT, BRACINGS AND REINFORCING REQUIREMENTS.

16. MECHANICAL PIPES AND ELECTRICAL CONDUITS WHICH PASS THROUGH MASONRY WALLS DO NOT REQUIRE SLEEVES, UNLESS NOTED OTHERWISE IN THE PROJECT SPECIFICATIONS, MECHANICAL OR ELECTRICAL DRAWINGS. IF SLEEVES ARE REQUIRED, INSTALL SLEEVES BEFORE GROUTING. DO NOT CUT ANY REINFORCING WHICH MAY INTERFERE WITH SLEEVE PLACEMENT. CORING OPENINGS IN GROUTED MASONRY IS NOT PERMITTED. NOTIFY THE STRUCTURAL ENGINEER IN ADVANCE OF CONDITIONS NOT SHOWN ON THE STRUCTURAL DRAWINGS. NO PIPES OR ELECTRICAL CONDUIT SHALL PASS THROUGH MASONRY LINTELS UNLESS SPECIFICALLY DETAILED.

17. ALL REINFORCED MASONRY WALLS WITH OPENINGS UP TO THREE (3) FEET WIDE, SHALL HAVE ONE VERTICAL BAR MINIMUM AT EACH SIDE OF OPENINGS. FOR OPENINGS LARGER THAN 3 FEET WIDE, PROVIDE TWO (2) VERTICAL BARS AT EACH SIDE OF OPENINGS. REINFORCING AT EDGES OF OPENING SHALL MATCH TYPICAL VERTICAL WALL REINFORCING (UNLESS NOTED OTHERWISE) AND SHALL EXTEND TO THE TOP OF WALL.

18. ALL REINFORCED MASONRY WALL CORNERS AND INTERSECTIONS SHALL HAVE ONE VERTICAL BAR (MINIMUM) IN GROUTED CELL. REINFORCING SHALL MATCH TYPICAL WALL VERTICAL REINFORCEMENT.

19. PROVIDE ONE VERTICAL BAR (MINIMUM) IN THE FIRST CELL EACH SIDE OF CONTROL JOINTS. REINFORCING SHALL MATCH TYPICAL VERTICAL WALL REINFORCING (UNLESS NOTED OTHERWISE) AND SHALL EXTEND TO THE TOP OF WALL.

20. FOR ANCHORED MASONRY VENEER, THE DISTANCE BETWEEN THE INSIDE FACE OF THE VENEER AND THE COLD-FORMED STEEL, MASONRY, WOOD, OR CONCRETE BACKUP SHALL BE AS SPECIFIED BY THE ARCHITECT, BUT NOT GREATER THAN 4 1/2". A MINIMUM 1 INCH AIR SPACE SHALL BE PROVIDED.

21. ANCHORED MASONRY VENEER NOT LAID IN A RUNNING BOND SHALL HAVE A JOINT REINFORCEMENT OF AT LEAST ONE WIRE, OF SIZE W1.7, SPACED AT A MAXIMUM OF 18 INCHES ON CENTER VERTICALLY.

22. SPECIAL INSPECTION, IN ACCORDANCE WITH THE BUILDING CODE REFERENCED ABOVE, SHALL BE PROVIDED FOR ALL CLAY MASONRY WALLS.

23. WHEN AMBIENT AIR TEMPERATURE IS BELOW 40 DEGREES FAHRENHEIT IMPLEMENT COLD WEATHER PROCEDURES IN ACCORDANCE WITH ACI 530.

24. WHEN AMBIENT AIR TEMPERATURE EXCEEDS 100 DEGREES FAHRENHEIT OR EXCEEDS 90 DEGRESS FAHRENHEIT WITH A WIND VELOCITY GREATER THAN 8 MPH IMPLEMENT HOT WEATHER PROCEDUCRES IN ACCORDANCE WITH ACI 530.

ROOF PRESSURE (GROSS)					
ZONE	0-10 SQ. FT.	20 SQ. FT.	50 SQ. FT.	>100 SQ. FT.	>500 SQ. FT.
1	+16,-25	+16,-24	+16,-23	+16,-23	+16,-23
2	+16,-42	+16,-37	+16,-31	+16,-27	+16,-27
3	+16,-63	+16,-52	+16,-38	+16,-27	+16,-27

WALL PRESSURE					
ZONE	0-10 SQ. FT.	20 SQ. FT.	50 SQ. FT.	>100 SQ. FT.	>500 SQ. FT.
4	+23,-25	+22,-24	+20,-22	+19,-21	+17,-19
5	+23,-30	+22,-28	+20,-26	+19,-24	+17,-19

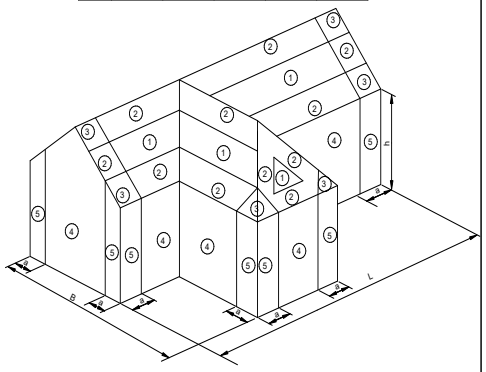

NOTES:
1. (0-10 SQ. FT.) EXAMPLE DENOTES EFFECTIVE WIND AREA.
2. + AND - SIGNS SIGNIFY PRESSURES ACTING TOWARD OR AWAY FROM THE SURFACES, RESPECTIVELY. ALL VALUES SHOWN ARE IN PSF.
3. WIND PRESSURE FOR EFFECTIVE WIND AREAS BETWEEN THE SPECIFIED RANGES MAY BE DETERMINED BY INTERPOLATION, OTHERWISE, USE THE VALUE ASSOCIATED WITH THE LOWER EFFECTIVE AREA.
4. a = WIDTH OF EDGE STRIP EQUAL TO 10% OF THE LEAST HORIZONTAL DIMENSION (L or B) or 40% OF THE ROOF HEIGHT (h), WHICHEVER IS SMALLER, BUT NOT LESS THAN 4% OF THE LEAST HORIZONTAL DIMENSION or 3ft.
5. ELEMENTS WITH TRIBUTARY AREAS GREATER THAN 700 SQ. FEET MAY BE DESIGNED USING MWFRS PROVISIONS.
6. VALUES SHOWN ARE BASED ON IBC 2012 / ASCE 7-10 WIND CALCULATIONS FOR COMPONENTS AND CLADDING AND ARE ULTIMATE VALUES (LRFD). VALUES SHOWN ARE FOR USE IN ASCE 7-10 LOAD COMBINATIONS SHOWN IN SECTION 2.32 (1.0W).
7. THE BUILDING LAYOUT SHOWN IS INTENDED TO BE SCHEMATIC, APPLY WIND PRESSURE PROVIDED SIMILARLY TO THE BUILDING(S) AT THIS PROJECT.
8. UNLESS OTHERWISE SPECIFIED, ROOF DEAD LOAD TO BE USED FOR NET UPLIFT CALCULATIONS SHALL NOT EXCEED 10 PSF. NET UPLIFT PRESSURE SHALL NOT BE LESS THAN 16 PSF.

COMPONENTS & CLADDING PRESSURES

PROFESSIONAL SEAL

Matrix Structural Engineers
TBPE Firm Registration No. F-2640

01/14/2020

LOGO/CONTACT

MATRIX
STRUCTURAL
ENGINEERS

5177 Richmond Avenue, Suite 670
Houston, TX 77046-2401
Tel: 713.664.0133
Fax: 713.664.1370
MSE - 18135

DESIGN TEAM

Architectural
Martinez Architects

Civil Engineer
Maverick Engineering

Structural
Matrix Structural engineers

MEP
DBR

Landscaping
KDC Associates

FIRE STATION #11

CITY OF MIDLAND

Briarwood Ave & Golden Gate Dr
Midland, TX 79707

PROJECT No: **MA 18017**
DATE: **01/14/2020**

ISSUE

100% DESIGN DEVELOPMENT
22-MAY-2019

75% CONSTRUCTION DOCUMENT
26-JUN-2019

100% ISSUE FOR PERMIT
30-JUL-2019

100% ISSUE FOR APPROVAL TO BID
16-JAN-2020

GENERAL NOTES

S103

4.1408

SPREAD FOOTING SCHEDULE

Mark	Length	Width	Thickness	Reinforcement Bottom (Short way)	Reinforcement Bottom (Long way)	Reinforcement Top (Short way)*	Reinforcement Top (Long way)*
F3	3' - 0"	3' - 0"	1' - 6"	(4)-#5	(4)-#5	(3)-#5	(3)-#5
F4	4' - 0"	4' - 0"	1' - 6"	(5)-#5	(5)-#5	(4)-#5	(4)-#5
F5	5' - 0"	5' - 0"	1' - 6"	(7)-#5	(7)-#5	(5)-#5	(5)-#5
F6	6' - 0"	6' - 0"	1' - 6"	(8)-#6	(8)-#6	(6)-#5	(6)-#5

* PROVIDE TOP BARS AT BRACE AND MOMENT FRAME COLUMNS ONLY.

FOUNDATION PLAN NOTES:

1. ALL SPREAD FOOTINGS ARE CENTERED UNDER COLUMN CENTERLINES, U.N.O.
2. SPREAD FOOTINGS OCCURRING AT INTERMEDIATE LOCATIONS SHALL BE CENTERED AT GRADE BEAM CENTERLINE.
3. SEE ARCHITECTURAL DRAWINGS FOR EXACT LOCATION OF ALL FLOOR SLOPES, DEPRESSIONS, ETC.
4. COORDINATE ALL BRICK LEDGES AND DEPTH WITH ARCHITECTURAL DRAWINGS.
5. LOCATIONS NOTED THUS: 0' - 0" INDICATES TOP OF SLAB ELEVATION. VERIFY WITH CIVIL FOR CORRESPONDING CIVIL ELEVATION.
6. SEE DETAILS 6, 9, & 11/S305 FOR BASE PLATES.
7. SEE 8/S301 & 7/S301 FOR ADDITIONAL REBAR AT OPENINGS AND RE-ENTRANT CORNERS IN SLAB-ON-GRADE.
8. PROVIDE CONTRACTION JOINTS AND DISCONTINUOUS SLAB REINFORCING AS SHOWN IN DETAIL 5/S301 & 4/S301.
9. FIELD VERIFY ALL EXISTING CONDITIONS AND DIMENSIONS PRIOR TO FABRICATION / CONSTRUCTION.
10. T.D. INDICATES TURNDOWN, SEE 3/S305.

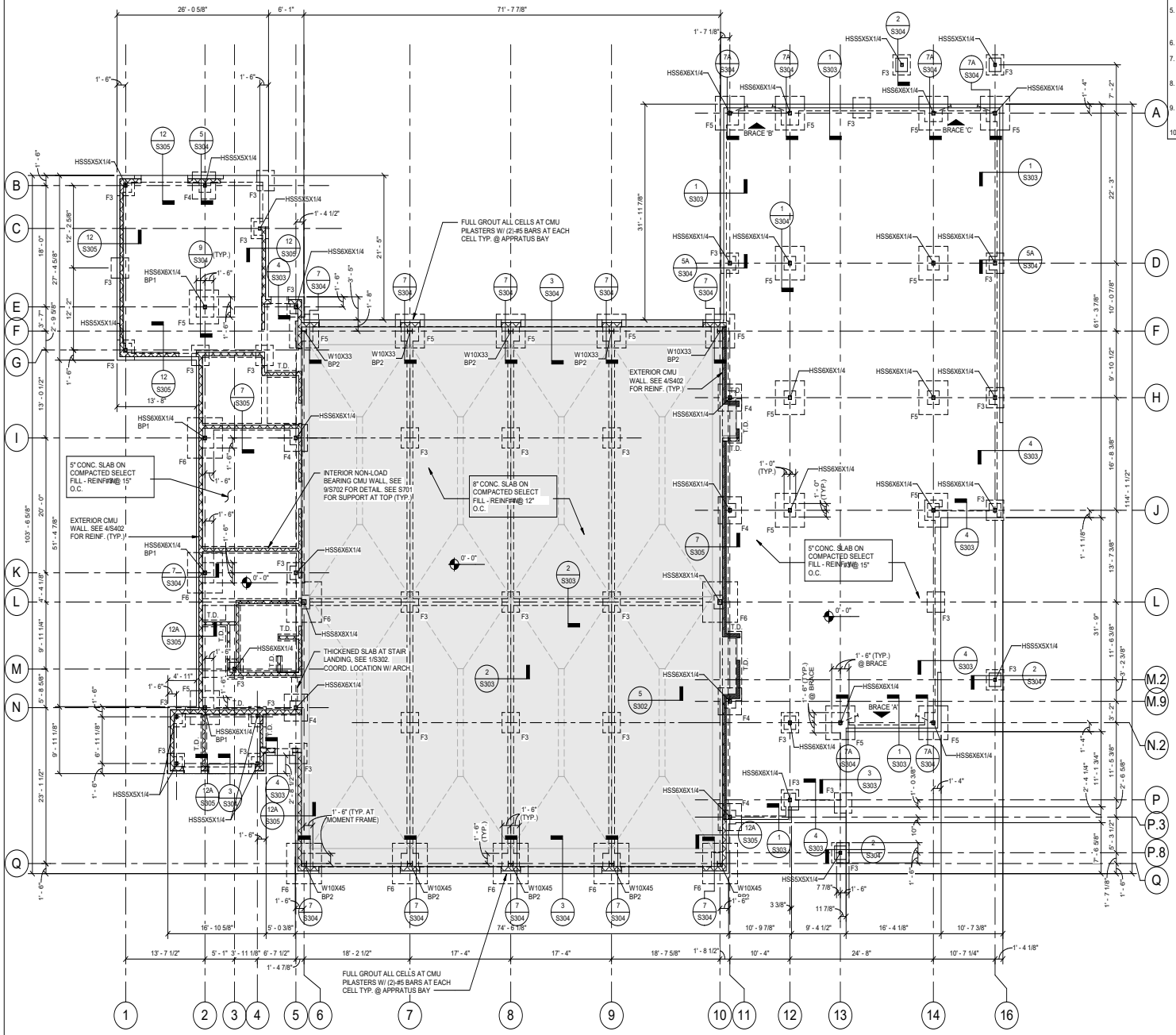

1 FOUNDATION PLAN - FIRE STATION
SCALE: 1/8" = 1'-0"

TRUE NORTH PROJECT NORTH

PROFESSIONAL SEAL
Matrix Structural Engineers
TBPE Firm Registration No. F-2640
STATE OF TEXAS
JAYNOOL A. KHAITHATTIE
68260
LICENSED PROFESSIONAL ENGINEER
01/14/2020

LOGO/CONTACT
MATRIX STRUCTURAL ENGINEERS
5177 Richmond Avenue, Suite 670
Houston, TX 77056-2401
Tel: 713.664.0133
Fax: 713.664.1370
MSE - 18135

DESIGN TEAM
Architectural
Martinez Architects
Civil Engineer
Maverick Engineering
Structural
Matrix Structural engineers
MEP
DBR
Landscaping
KDC Associates

FIRE STATION #11
CITY OF MIDLAND
Briarwood Ave & Golden Gate Dr
Midland, TX 79707

PROJECT No: MA 18017
DATE: 01/14/2020

ISSUE
100% DESIGN DEVELOPMENT 22-MAY-2019
75% CONSTRUCTION DOCUMENT 26-JUN-2019
100% ISSUE FOR PERMIT 30-JUL-2019
100% ISSUE FOR APPROVAL TO BID 16-JAN-2020

FOUNDATION PLAN - FIRE STATION

S201

4.1409

SPREAD FOOTING SCHEDULE

Mark	Length	Width	Thickness	Reinforcement Bottom (Short way)	Reinforcement Bottom (Long way)	Reinforcement Top (Short way)*	Reinforcement Top (Long way)*
F3	3' - 0"	3' - 0"	1' - 6"	(4)-#5	(4)-#5	(3)-#5	(3)-#5
F4	4' - 0"	4' - 0"	1' - 6"	(5)-#5	(5)-#5	(4)-#5	(4)-#5
F5	5' - 0"	5' - 0"	1' - 6"	(7)-#5	(7)-#5	(5)-#5	(5)-#5
F6	6' - 0"	6' - 0"	1' - 6"	(8)-#6	(8)-#6	(6)-#5	(6)-#5

* PROVIDE TOP BARS AT BRACE AND MOMENT FRAME COLUMNS ONLY.

FOUNDATION PLAN NOTES:

1. ALL SPREAD FOOTINGS ARE CENTERED UNDER COLUMN CENTERLINES, U.N.O.
2. SPREAD FOOTINGS OCCURRING AT INTERMEDIATE LOCATIONS SHALL BE CENTERED AT GRADE BEAM CENTERLINE.
3. SEE ARCHITECTURAL DRAWINGS FOR EXACT LOCATION OF ALL FLOOR SLOPES, DEPRESSIONS, ETC.
4. COORDINATE ALL BRICK LEDGES AND DEPTH WITH ARCHITECTURAL DRAWINGS.
5. LOCATIONS NOTED THUS: 0' - 0" INDICATES TOP OF SLAB ELEVATION. VERIFY WITH CIVIL FOR CORRESPONDING CIVIL ELEVATION.
6. SEE DETAILS 6, 9, & 11/S305 FOR BASE PLATES.
7. SEE 8/S301 & 7/S301 FOR ADDITIONAL REBAR AT OPENINGS AND RE-ENTRANT CORNERS IN SLAB-ON-GRADE.
8. PROVIDE CONTRACTION JOINTS AND DISCONTINUOUS SLAB REINFORCING AS SHOWN IN DETAIL 5/S301 & 4/S301.
9. FIELD VERIFY ALL EXISTING CONDITIONS AND DIMENSIONS PRIOR TO FABRICATION / CONSTRUCTION.
10. T.D. INDICATES TURNDOWN, SEE 3/S305.

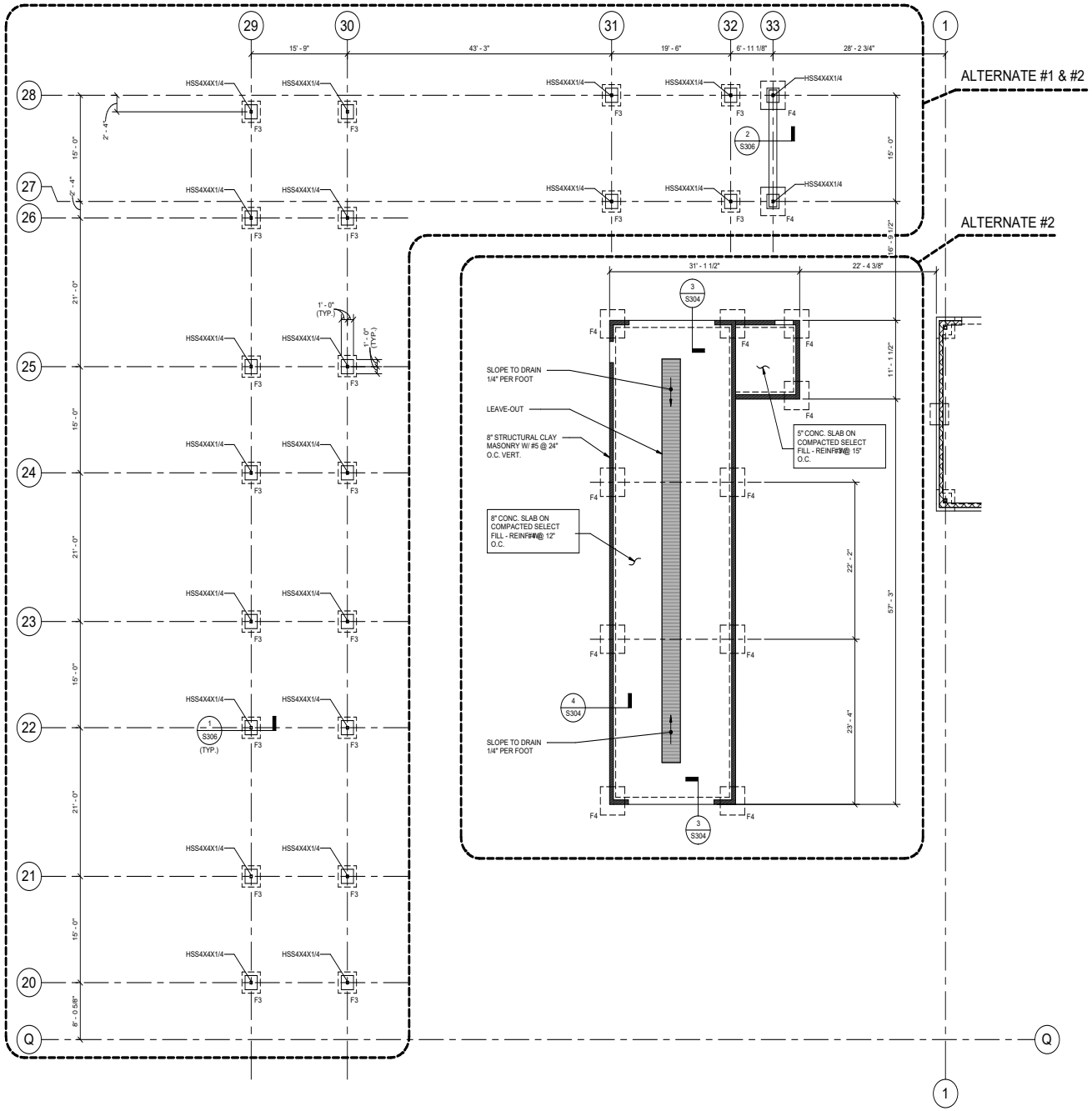

1 FOUNDATION PLAN - SUPPORT COMPONENTS
SCALE: 1/8" = 1'-0"

TRUE NORTH
PROJECT NORTH

PROFESSIONAL SEAL
Matrix Structural Engineers
TBPE Firm Registration No. F-2640
STATE OF TEXAS
JAYNOOL A. KHAYRATTEE
68260
LICENSED PROFESSIONAL ENGINEER
01/14/2020

LOGO/CONTACT
MATRIX STRUCTURAL ENGINEERS
5177 Richmond Avenue, Suite 670
Houston, TX 77056-2401
Tel: 713.664.0133
Fax: 713.664.1370
MSE - 18135

DESIGN TEAM

Architectural
Martinez Architects

Civil Engineer
Maverick Engineering

Structural
Matrix Structural engineers

MEP
DBR

Landscaping
KDC Associates

FIRE STATION #11
CITY OF MIDLAND
Briarwood Ave & Golden Gate Dr
Midland, TX 79707

PROJECT No: **MA 18017**
DATE: **01/14/2020**

ISSUE
100% DESIGN DEVELOPMENT 22-MAY-2019
75% CONSTRUCTION DOCUMENT 26-JUN-2019
100% ISSUE FOR PERMIT 30-JUL-2019
100% ISSUE FOR APPROVAL TO BID 16-JAN-2020

FOUNDATION PLAN - SUPPORT COMPONENTS

S202

4.1410

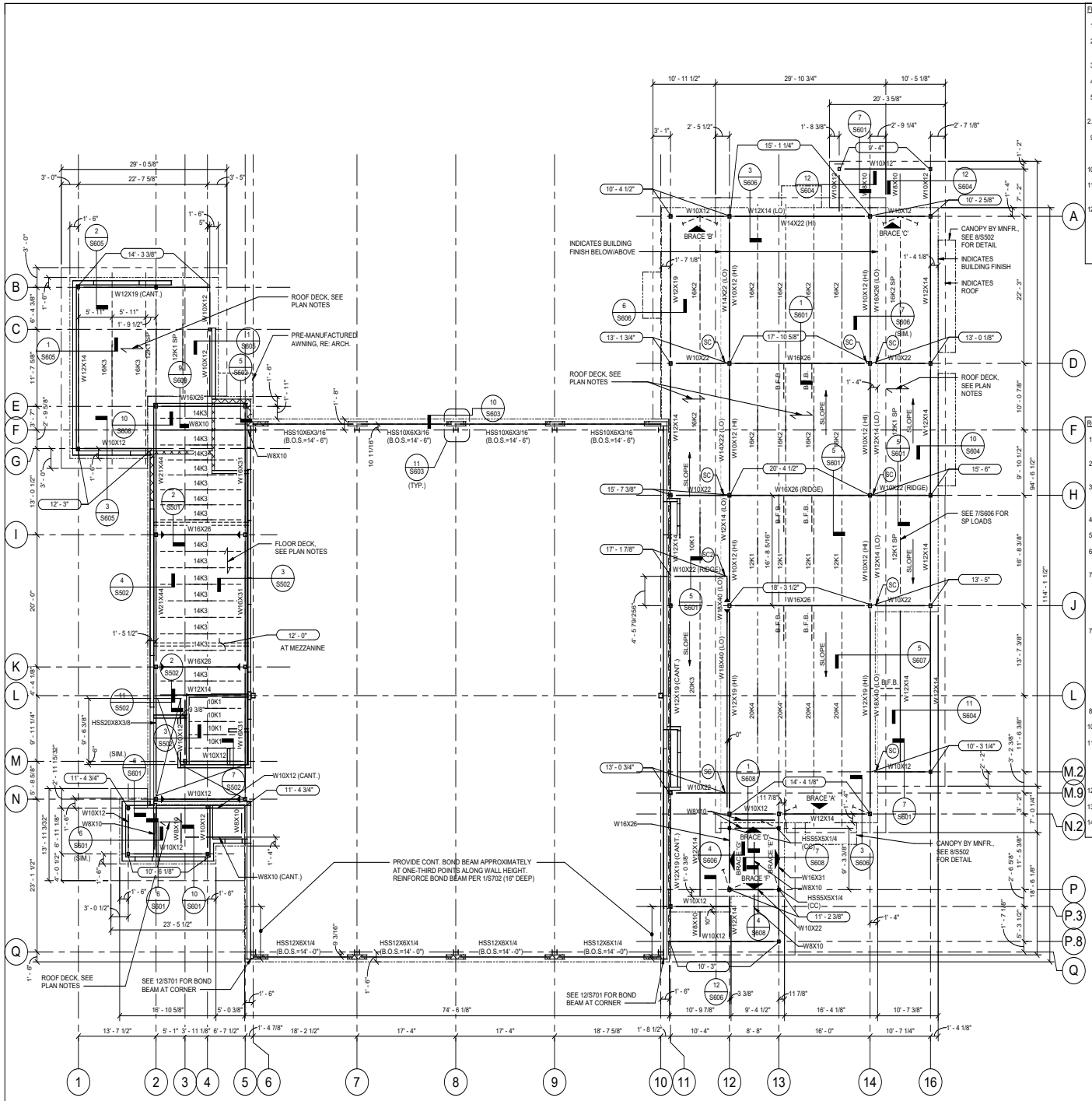

FLOOR PLAN NOTES:

1. TOP OF CONCRETE ELEVATION = 12' - 0"
2. LOCATIONS SHOWN THUS: (12) C=3/4" INDICATES NUMBER OF SHEAR CONNECTORS AS 12 AND UPWARD CAMBER AT MID SPAN OF BEAM AS 3/4"
3. SPACE JOISTS EQUALLY U.N.O.
4. PROVIDE END PLATES AT ALL TUBE BEAMS.
5. FIELD VERIFY ALL EXISTING CONDITIONS AND DIMENSIONS PRIOR TO FABRICATION / CONSTRUCTION.
2. SEE SHEET S201 FOR ALL COLUMN SIZES NOT SHOWN.
9. = MOMENT CONNECTION
   LSH = LONG SIDE HORIZONTAL
   LSV = LONG SIDE VERTICAL
10. CC: INDICATES CARRIED COLUMN, SEE DETAIL 7/S401.
11. ALL LOWER TUBE BEAM ELEVATIONS TO BE VERIFIED WITH ARCHITECT DRAWINGS.
12. FLOOR SHALL BE 2 1/2" NORMAL WEIGHT CONCRETE OVER THE FLUTES OF 1.0C TYPE 22 GA. STEEL DECK AS MANUFACTURED BY VULCRAFT OR APPROVED EQUIVALENT TO TOTAL THICKNESS = 3 1/2". REINFORCE CONCRETE WITH 6x6-W2.9xW2.9 WWF. WELD DECK USING 5/8"Ø NET EFFECTIVE PUDDLE WELDS:
   a. PERPENDICULAR BEARING : 33/4 PATTERN.
   b. PARALLEL BEARING AND EDGE : AT 11" O.C.
   c. SIDE SEAMS : SEAM WELDS AT 11" O.C.

ROOF FRAMING PLAN NOTES:

1. LOCATIONS SHOWN THUS: ( ) INDICATES TOP OF STEEL (T.O.S.) ELEVATION (TOP OF STEEL = TOP OF JOIST OR BOTTOM OF DECK).
2. FIELD VERIFY ALL EXISTING CONDITIONS AND DIMENSIONS PRIOR TO FABRICATION / CONSTRUCTION.
3. JOISTS SHALL BE DESIGNED FOR ADDITIONAL LOADS RESULTING FROM RTU'S AND OTHER MECHANICAL EQUIPMENT ON THE ROOF OR SUSPENDED FROM THE ROOF STRUCTURE. SEE ARCHITECTURAL AND MEP DRAWINGS FOR LOCATIONS.
4. SPACE JOISTS EQUALLY, U.N.O.
5. PROVIDE 3/16" CLOSURE PLATES AT ALL TUBE BEAMS.
6. REFER TO ARCHITECTURAL DRAWINGS / MEP FOR LOCATIONS OF ROOF DRAINS, OVERFLOW DRAINS AND TAPERED INSULATION.
7a. ROOF SHALL BE 1.5B, 22GA DECK AS MANUFACTURED BY VULCRAFT OR EQUIVALENT. SEE ARCHITECTURAL DRAWINGS FOR INSULATION, ROOFING, ETC. WELD DECK USING 5/8"Ø NET EFFECTIVE PUDDLE WELDS:
   a. PERPENDICULAR BEARING: 36/7 PATTERN.
   b. PARALLEL BEARINGS AND EDGE: AT 6"O.C.
   c. SIDE SEAMS: #10 TEK SCREWS AT 12"O.C.
7b. IN LIEU OF THE DECK ATTACHMENT SHOWN ABOVE, ALTERNATE DECK ATTACHMENT SHALL BE AS FOLLOWS:
   a. REPLACE EACH 5/8"Ø WELD WITH ONE HILTI X-HSN 24 FASTENER FOR BASE STEEL FLANGE THICKNESS (tf) ≤ 3/8" AT THICKER BASE STEEL USE ONE HILTI X-ENP-19-L15 TYPE FASTENER.
   b. REPLACE EACH SIDE SEAM #10 SCREW WITH ONE HILTI S-SLC 01 M HWH FASTENER FOR DECK THICKNESS LESS THAN OR EQUAL TO 20 GAGE.
   c. ATTACHMENTS SHALL BE INSTALLED IN STRICT ACCORDANCE WITH MANUFACTURER SPECIFICATIONS.
8. SEE SHEET S801 FOR BRACE ELEVATIONS.
10. SEE SHEET S201 FOR ALL COLUMN SIZES NOT SHOWN.
11. = MOMENT CONNECTION
    LSH = LONG SIDE HORIZONTAL
    LSV = LONG SIDE VERTICAL
    HI = HIGH
    LO = LOW
12. CC : INDICATES CARRIED COLUMN, SEE DETAIL 7/S401.
13. B.F.B. INDICATES BOTTOM FLANGE BRACE, SEE 1/S602 FOR DETAIL.
14. (SC) INDICATES SLIP CRITICAL CONNECTION, SEE 12/S402 FOR DETAIL.

TRUE NORTH | PROJECT NORTH

1 MEZZANINE & LOW ROOF FRAMING PLANS - FIRE STATION

SCALE: 1/8" = 1'-0"

PROFESSIONAL SEAL

Matrix Structural Engineers
TBPE Firm Registration No. F-2640

STATE OF TEXAS
JAYNOOL A. KHAYMATTEE
68260
LICENSED PROFESSIONAL ENGINEER

01/14/2020

LOGO/CONTACT

MATRIX STRUCTURAL ENGINEERS

5177 Richmond Avenue, Suite 670
Houston, TX 77056-2401
Tel: 713.664.0133
Fax: 713.664.1370
MSE - 18135

DESIGN TEAM

Architectural
Martinez Architects

Civil Engineer
Maverick Engineering

Structural
Matrix Structural engineers

MEP
DBR

Landscaping
KDC Associates

FIRE STATION #11

CITY OF MIDLAND

Briarwood Ave & Golden Gate Dr
Midland, TX 79707

PROJECT No: **MA 18017**
DATE: **01/14/2020**

ISSUE

100% DESIGN DEVELOPMENT 22-MAY-2019
75% CONSTRUCTION DOCUMENT 26-JUN-2019
100% ISSUE FOR PERMIT 30-JUL-2019
100% ISSUE FOR APPROVAL TO BID 16-JAN-2020

MEZZANINE FRAMING & LOW ROOF FRAMING PLANS

S211

4.1411

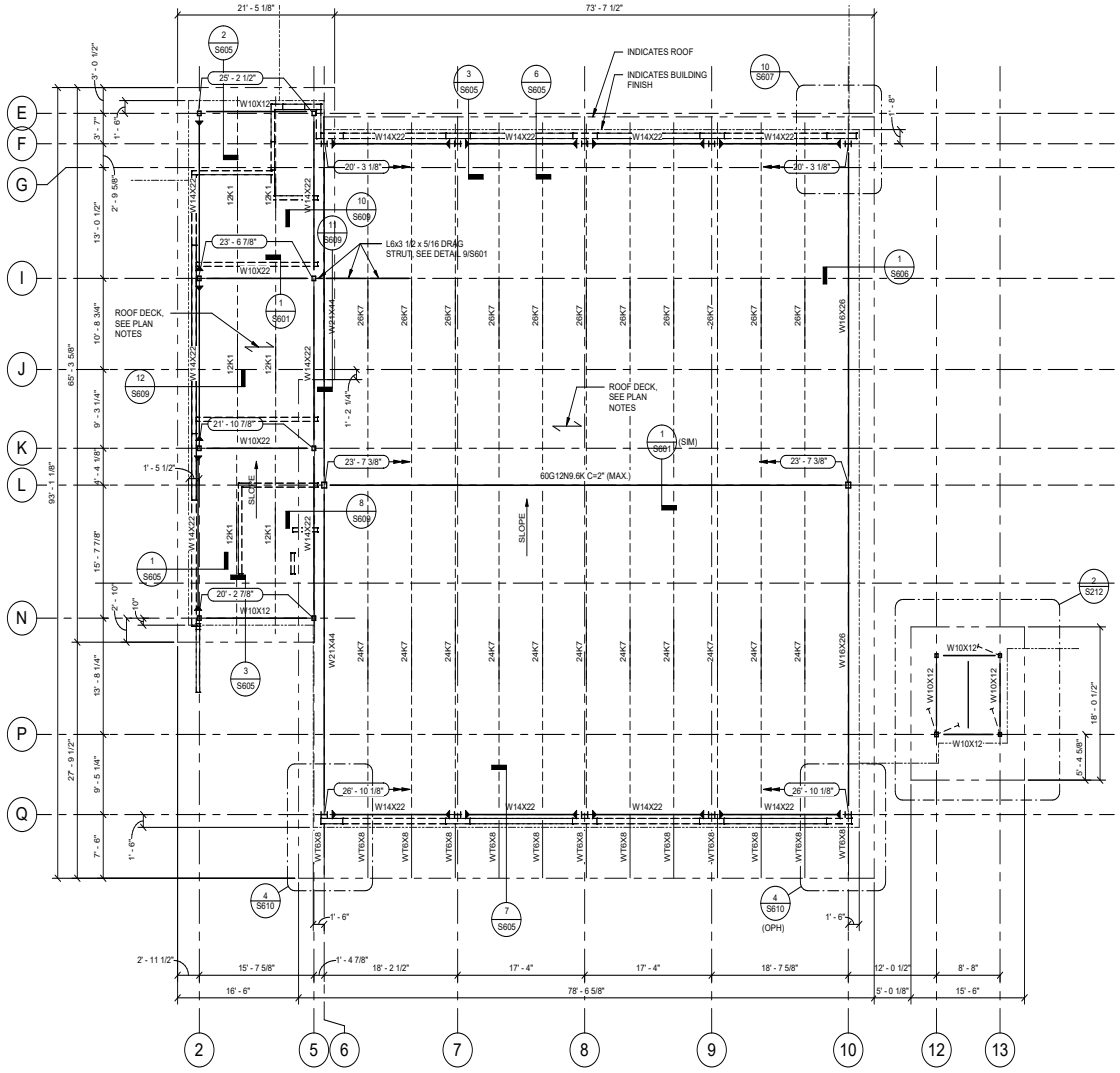

1 HIGH ROOF FRAMING PLAN - FIRE STATION
SCALE: 1/8" = 1'-0"

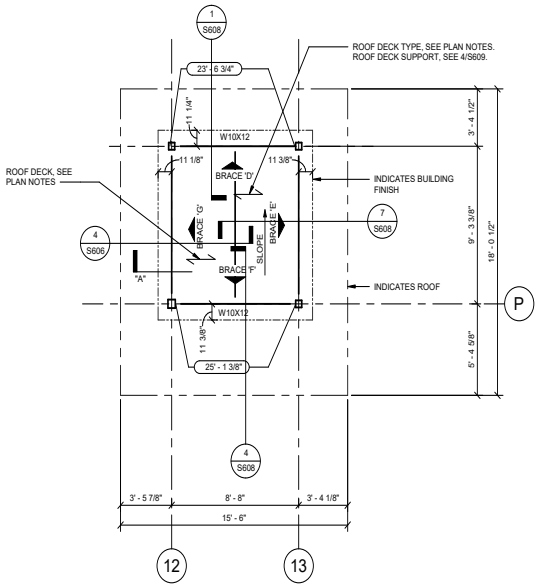

PARTIAL ENLARGED
2 HIGH ROOF FRAMING PLAN - FIRE STATION
SCALE: 1/4" = 1'-0"

TRUE NORTH
PROJECT NORTH

ROOF FRAMING PLAN NOTES:

1. LOCATIONS SHOWN THUS: ( ) INDICATES TOP OF STEEL (T.O.S.) ELEVATION (TOP OF STEEL = TOP OF JOIST OR BOTTOM OF DECK).
2. FIELD VERIFY ALL EXISTING CONDITIONS AND DIMENSIONS PRIOR TO FABRICATION / CONSTRUCTION.
3. JOISTS SHALL BE DESIGNED FOR ADDITIONAL LOADS RESULTING FROM RTU'S AND OTHER MECHANICAL EQUIPMENT ON THE ROOF OR SUSPENDED FROM THE ROOF STRUCTURE. SEE ARCHITECTURAL AND MEP DRAWINGS FOR LOCATIONS.
4. SPACE JOISTS EQUALLY, U.N.O.
5. PROVIDE 3/16" CLOSURE PLATES AT ALL TUBE BEAMS.
6. REFER TO ARCHITECTURAL DRAWINGS / MEP FOR LOCATIONS OF ROOF DRAINS, OVERFLOW DRAINS AND TAPERED INSULATION.

7a. ROOF SHALL BE 1.5B, 22GA DECK AS MANUFACTURED BY VULCRAFT OR EQUIVALENT. SEE ARCHITECTURAL DRAWINGS FOR INSULATION, ROOFING, ETC. WELD DECK USING 5/8"Ø NET EFFECTIVE PUDDLE WELDS:
a. PERPENDICULAR BEARING: 36/7 PATTERN.
b. PARALLEL BEARINGS AND EDGE: AT 6"O.C.
c. SIDE SEAMS: #10 TEK SCREWS AT 12"O.C.

7b. IN LIEU OF THE DECK ATTACHMENT SHOWN ABOVE, ALTERNATE DECK ATTACHMENT SHALL BE AS FOLLOWS:
a. REPLACE EACH 5/8"Ø WELD WITH ONE HILTI X-HSN 24 FASTENER FOR BASE STEEL FLANGE THICKNESS (tf) ≤ 3/8" AT THICKER BASE STEEL USE ONE HILTI X-ENP-19-L15 TYPE FASTENER.
b. REPLACE EACH SIDE SEAM #10 SCREW WITH ONE HILTI S-SLC 01 M HWH FASTENER FOR DECK THICKNESS LESS THAN OR EQUAL TO 20 GAGE.
c. ATTACHMENTS SHALL BE INSTALLED IN STRICT ACCORDANCE WITH MANUFACTURER SPECIFICATIONS.

8. SEE SHEET S801 FOR BRACE ELEVATIONS.
10. SEE SHEET S201 FOR ALL COLUMN SIZES NOT SHOWN.
11. ▶— = MOMENT CONNECTION
LSH = LONG SIDE HORIZONTAL
LSV = LONG SIDE VERTICAL
HI = HIGH
LO = LOW
12. CC : INDICATES CARRIED COLUMN, SEE DETAIL 7/S401.
13. B.F.B. INDICATES BOTTOM FLANGE BRACE, SEE 1/S602 FOR DETAIL.
14. (SC) INDICATES SLIP CRITICAL CONNECTION, SEE 12/S402 FOR DETAIL.

PROFESSIONAL SEAL
Matrix Structural Engineers
TBPE Firm Registration No. F-2640
STATE OF TEXAS
JAYNOOL A. KHAYRATTEE
66260
REGISTERED PROFESSIONAL ENGINEER
01/14/2020

LOGO/CONTACT
MATRIX STRUCTURAL ENGINEERS
5177 Richmond Avenue, Suite 670
Houston, TX 77056-2401
Tel: 713.664.0130
Fax: 713.664.1370
MSE - 18135

DESIGN TEAM
Architectural
Martinez Architects
Civil Engineer
Maverick Engineering
Structural
Matrix Structural engineers
MEP
DBR
Landscaping
KDC Associates

FIRE STATION #11
CITY OF MIDLAND
Briarwood Ave & Golden Gate Dr
Midland, TX 79707

PROJECT No: MA 18017
DATE: 01/14/2020

ISSUE
100% DESIGN DEVELOPMENT 22-MAY-2019
75% CONSTRUCTION DOCUMENT 26-JUN-2019
100% ISSUE FOR PERMIT 30-JUL-2019
100% ISSUE FOR APPROVAL TO BID 16-JAN-2020

HIGH ROOF FRAMING PLAN

S212

4.1412

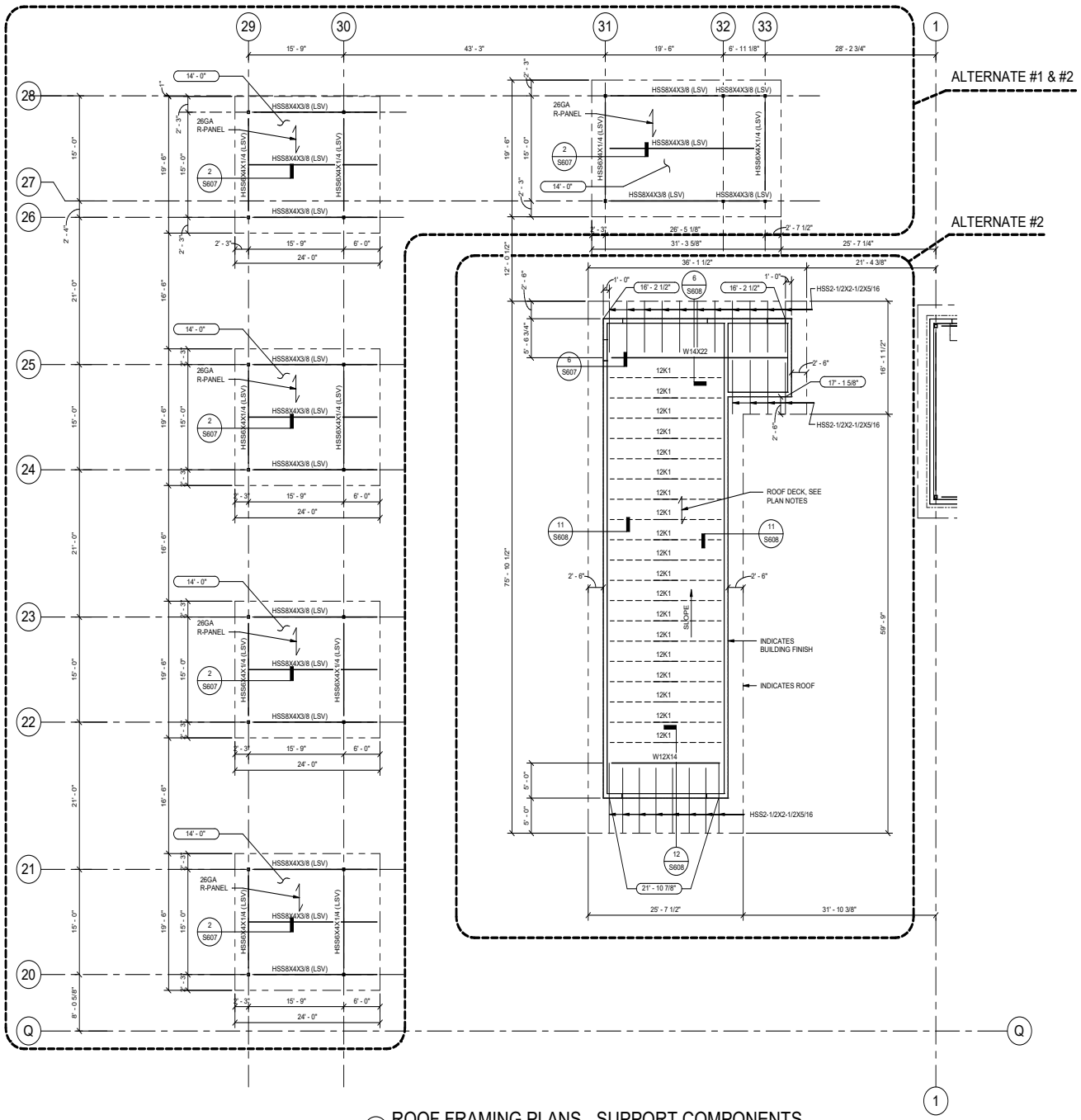

1 ROOF FRAMING PLANS - SUPPORT COMPONENTS
SCALE: 1/8" = 1'-0"

TRUE NORTH
PROJECT NORTH

ROOF FRAMING PLAN NOTES:

1. LOCATIONS SHOWN THUS: ( ) INDICATES TOP OF STEEL (T.O.S.) ELEVATION (TOP OF STEEL = TOP OF JOIST OR BOTTOM OF DECK).
2. FIELD VERIFY ALL EXISTING CONDITIONS AND DIMENSIONS PRIOR TO FABRICATION / CONSTRUCTION.
3. JOISTS SHALL BE DESIGNED FOR ADDITIONAL LOADS RESULTING FROM RTU'S AND OTHER MECHANICAL EQUIPMENT ON THE ROOF OR SUSPENDED FROM THE ROOF STRUCTURE. SEE ARCHITECTURAL AND MEP DRAWINGS FOR LOCATIONS.
4. SPACE JOISTS EQUALLY, U.N.O.
5. PROVIDE 3/16" CLOSURE PLATES AT ALL TUBE BEAMS.
6. REFER TO ARCHITECTURAL DRAWINGS / MEP FOR LOCATIONS OF ROOF DRAINS, OVERFLOW DRAINS AND TAPERED INSULATION.

7a. ROOF SHALL BE 1.5B, 22GA DECK AS MANUFACTURED BY VULCRAFT OR EQUIVALENT. SEE ARCHITECTURAL DRAWINGS FOR INSULATION, ROOFING, ETC. WELD DECK USING 5/8"Ø NET EFFECTIVE PUDDLE WELDS:
a. PERPENDICULAR BEARING: 36/7 PATTERN.
b. PARALLEL BEARINGS AND EDGE: AT 6"O.C.
c. SIDE SEAMS: #10 TEK SCREWS AT 12"O.C.

7b. IN LIEU OF THE DECK ATTACHMENT SHOWN ABOVE, ALTERNATE DECK ATTACHMENT SHALL BE AS FOLLOWS:
a. REPLACE EACH 5/8"Ø WELD WITH ONE HILTI X-HSN 24 FASTENER FOR BASE STEEL FLANGE THICKNESS (tf) ≤ 3/8" AT THICKER BASE STEEL USE ONE HILTI X-ENP-19-L15 TYPE FASTENER.
b. REPLACE EACH SIDE SEAM #10 SCREW WITH ONE HILTI S-SLC 01 M HWH FASTENER FOR DECK THICKNESS LESS THAN OR EQUAL TO 20 GAGE.
c. ATTACHMENTS SHALL BE INSTALLED IN STRICT ACCORDANCE WITH MANUFACTURER SPECIFICATIONS.

8. SEE SHEET S801 FOR BRACE ELEVATIONS.
10. SEE SHEET S201 FOR ALL COLUMN SIZES NOT SHOWN.
11. ▶— = MOMENT CONNECTION
LSH = LONG SIDE HORIZONTAL
LSV = LONG SIDE VERTICAL
HI = HIGH
LO = LOW
12. CC : INDICATES CARRIED COLUMN, SEE DETAIL 7/S401.
13. B.F.B. INDICATES BOTTOM FLANGE BRACE, SEE 1/S602 FOR DETAIL.
14. (SC) INDICATES SLIP CRITICAL CONNECTION, SEE 12/S402 FOR DETAIL.

PROFESSIONAL SEAL
Matrix Structural Engineers
TBPE Firm Registration No. F-2640
STATE OF TEXAS
JAYNOOL A. KHAYRATTEE
68260
PROFESSIONAL ENGINEER
01/14/2020

LOGO/CONTACT
MATRIX STRUCTURAL ENGINEERS
5177 Richmond Avenue, Suite 670
Houston, TX 77056-2401
Tel: 713.664.0130
Fax: 713.664.1370
MSE - 18135

DESIGN TEAM
Architectural
Martinez Architects
Civil Engineer
Maverick Engineering
Structural
Matrix Structural engineers
MEP
DBR
Landscaping
KDC Associates

FIRE STATION #11
CITY OF MIDLAND
Briarwood Ave & Golden Gate Dr
Midland, TX 79707

PROJECT No: MA 18017
DATE: 01/14/2020

ISSUE
100% DESIGN DEVELOPMENT 22-MAY-2019
75% CONSTRUCTION DOCUMENT 26-JUN-2019
100% ISSUE FOR PERMIT 30-JUL-2019
100% ISSUE FOR APPROVAL TO BID 16-JAN-2020

ROOF FRAMING PLANS - SUPPORT COMPONENTS

S213

4.1413

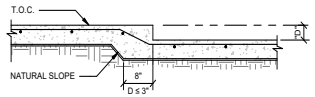

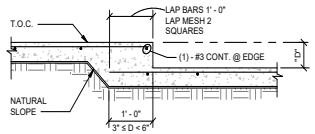

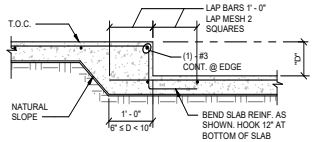

NOTES:
1. COORDINATE DEPTH & LOCATIONS OF ALL FLOOR DEPRESSIONS WITH ARCHITECTURAL DRAWINGS.
2. PROVIDE (1) - #4 x 4' - 0" TOP AT INTERIOR CORNERS OF ALL DEPRESSIONS.

TYPICAL DETAIL
AT FLOOR DEPRESSIONS

11 SCALE: N.T.S.

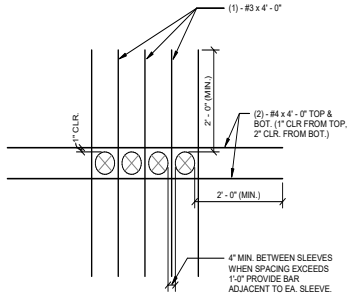

MULTIPLE OPENINGS
(PIPE SLEEVES)

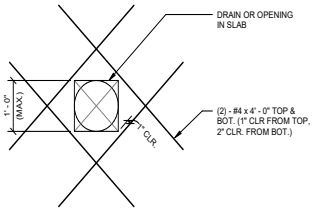

SINGLE DRAIN OR OPENING

NOTES:
1. COORDINATE OPENING SIZE AND LOCATIONS WITH ARCHITECTURAL AND MECHANICAL DRAWINGS.
2. MAXIMUM DIMENSION "A" SHALL BE 4' - 0". REFER TO PLAN OR DETAIL ON DRAWINGS FOR FRAMING OF OPENINGS GREATER THAN 4' - 0".
3. CONDUIT & PIPES OF ALUMINUM SHALL NOT BE PLACED IN CONCRETE UNLESS EFFECTIVELY COATED W/ PROTECTIVE MATERIAL TO PREVENT CHEMICAL REACTION.

TYPICAL DETAIL
ADDITIONAL REINFORCEMENT AT
OPENINGS AT SLAB-ON-GRADE

8 SCALE: N.T.S.

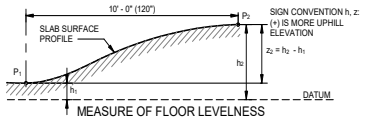

MEASURE OF FLOOR LEVELNESS

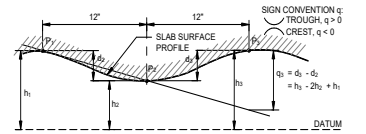

MEASURE OF FLOOR FLATNESS

NOTES:
1. F_L = LEVELNESS F-NUMBER
$F_L = \frac{12.5}{(3 \times S_z) + z}$ WHERE $\bar{z}$ = MEAN VALUE OF ALL z FLOOR READINGS. S_z = STANDARD DEVIATION OF ALL z FLOOR READINGS.
2. F_F = LEVELNESS F-NUMBER
$F_F = \frac{4.57}{(3 \times S_q) + \bar{q}}$ WHERE $\bar{q}$ = MEAN VALUE OF ALL z FLOOR READINGS. S_q = STANDARD DEVIATION OF ALL q FLOOR READINGS
3. F_L AND F_F SHALL BE STATISTICALLY DETERMINED ACCORDING TO ASTM E 1155 "STANDARD TEST METHOD FOR DETERMINING FLOOR FLATNESS AND LEVELNESS USING THE F-NUMBER SYSTEM.".
4. REFER TO CONCRETE SPECIFICATIONS FOR REQUIRED F_F AND F_L VALUES.

TYPICAL DETAIL
SLAB SURFACE TOLERANCE

6 SCALE: N.T.S.

NOTE:
CONCRETE IN BLOCK OUT SHALL BE REINFORCED W/ #4 @ 12"

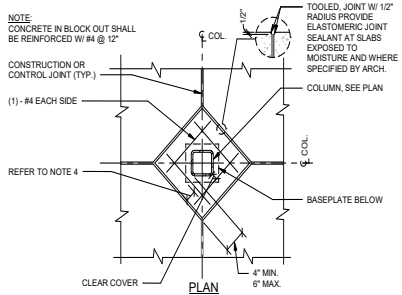

PLAN

NOTES:
1. GENERAL CONTRACTOR TO COORDINATE REQUIRED SIZE OF BLOCK OUT FOR COLUMNS. SUBMIT THE DESIRED BLOCK OUT SIZE TO ARCHITECT FOR APPROVAL.
2. PROVIDE 3" MINIMUM CONCRETE COVER ALL AROUND COLUMN.
3. BLOCKOUT SHALL BE SIZED TO PROVIDE 3" MINIMUM CONCRETE COVER ALL AROUND COLUMN AND BASE PLATE.
4. GENERAL CONTRACTOR TO INCREASE COLUMN BLOCK-OUT DIMENSIONS AS REQUIRED TO ACCOMMODATE GUSSET PLATES AT BRACE FRAMES.

TYPICAL DETAIL
BLOCK-OUT AROUND COLUMN
(SLAB-ON-GRADE)

3 SCALE: N.T.S.

DOWEL SCHEDULE			
SLAB DEPTH (IN.)	DOWEL DIAMETER (IN.)	TOTAL DOWEL LENGTH (IN.)	DOWEL SPACING CENTER TO CENTER (IN.)
5-6	3/4	16	12
7-8	1	18	12
9-11	1 1/4	18	12

CONTRACTION JOINT SPACING	
SLAB THK. (IN.)	JOINT SPACING (FT)
4	11
5	13
6	14
7	16
8	17
≥9	18

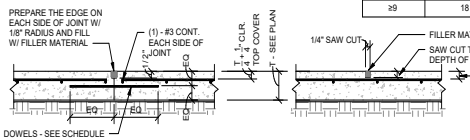

CONSTRUCTION JOINT

CONTRACTION JOINT

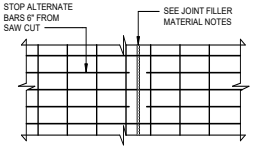

CONTRACTION JOINT (PLAN VIEW)

CONSTRUCTION JOINT NOTES:
1. SLAB REINFORCEMENT SHALL BE CHAIRED BY SOIL SUPPORTED SLAB BOLSTERS.
2. BREAK BOND BETWEEN NEW AND PREVIOUSLY PLACED SLAB BY SPRAYING OR PAINTING EXPOSED SIDE WITH FORM OIL.
3. SUBGRADE SHALL BE FREE OF STANDING WATER AT THE TIME OF CONCRETE PLACEMENT.
4. ALL DOWELS IN THIS DETAIL SHALL BE SMOOTH BAR DOWELS.

JOINT SPACING NOTE:
1. PROVIDE CONTRACTION AND/OR CONSTRUCTION JOINTS AT EVERY COLUMN CENTERLINE AND AT A MAXIMUM SPACING AS SCHEDULED. NOT TO EXCEED 18 FEET, U.N.O. ASPECT RATIOS OF SLAB PANELS ENCLOSED BY CONTROL JOINTS SHALL NOT EXCEED 1.5 TO 1.

SAW CONTRACTION JOINT NOTES:
1. MAKE SAW CUT AS SOON AS SLAB IS ABLE TO SUPPORT WEIGHT OF WORKERS AND SAWING EQUIPMENT WITHOUT DAMAGE TO FINISH SURFACE OF SLAB.
2. ALL JOINTS SHALL BE CONTINUOUS. DO NOT OFFSET OR STAGGER JOINTS.
3. CLEAN JOINT PRIOR TO FILLING THE JOINT.

JOINT FILLER MATERIAL NOTES:
1. FILLER MATERIAL USED SHALL BE EPOXY RESINS WITH A MINIMUM SHORE "A" HARDNESS OF 80 AND SHALL CONFORM TO ASTM D2240. JOINT FILLER SHALL BE APPROVED BY ENGINEER PRIOR TO APPLICATION. INSTALL JOINT FILLER PER MANUFACTURER'S SPECIFICATIONS.
2. WHERE POSSIBLE, FILLER MATERIAL SHALL BE APPLIED WHEN BUILDING IS UNDER PERMANENT TEMPERATURE CONTROL. THIS SHALL BE EITHER AT THE END OF CONSTRUCTION OF THE COMPLETE BUILDING SHELL, OR A MINIMUM OF 90 DAYS AFTER SLAB CONSTRUCTION.
3. ALL EXPOSED SLAB JOINTS SHALL BE FILLED WITH FILLER MATERIAL.

TYPICAL DETAIL
CONSTRUCTION AND CONTRACTION JOINTS SLAB-ON-GRADE

5 SCALE: N.T.S.

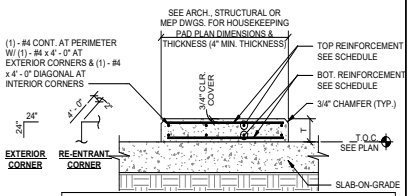

HOUSEKEEPING PAD REINF. SCHEDULE		
PAD THICKNESS	TOP REINFORCEMENT	BOTTOM REINF.
T ≤ 4"	WWR 4x4-W2.9xW2.9 OR #3 @12" E.W.	NONE
4" < T ≤ 6"	WWR 4x4-W4xW4 OR #4 @18" E.W.	NONE
6" < T ≤ 8"	WWR 4x4-W6xW6 OR #4 @12" E.W.	NONE
8" < T ≤ 12"	#4 @ 18" E.W.	#4 @ 18" E.W.
12" < T ≤ 16"	#4 @ 12" E.W.	#4 @ 12" E.W.

NOTES:
1. GENERAL CONTRACTOR TO COORDINATE WITH MECHANICAL DRAWINGS AND SPECIFICATIONS TO DETERMINE REQUIREMENTS FOR HOUSEKEEPING PADS OVER SLAB-ON-GRADE AND PROVIDE WHERE REQUIRED WHETHER SHOWN ON STRUCTURAL DRAWINGS OR NOT. COORDINATE DIMENSIONS AND OTHER SPECIAL REQUIREMENTS WITH EQUIPMENT MANUFACTURERS AS REQUIRED.
2. PAD SHALL NOT BE POURED UNTIL AFTER SLAB HAS REACHED ITS SPECIFIED 28 DAYS STRENGTH.
3. CONCRETE FOR HOUSEKEEPING PAD SHALL BE NORMAL WEIGHT CONCRETE WITH f'c = 3,000 PSI.

TYPICAL DETAIL
CONCRETE ISLAND OR HOUSEKEEPING PAD
SLAB-ON-GRADE

10 SCALE: N.T.S.

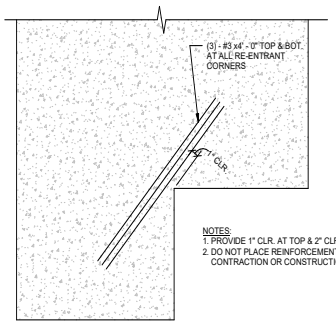

NOTES:
1. PROVIDE 1" CLR. AT TOP & 2" CLR. AT BOT.
2. DO NOT PLACE REINFORCEMENT ACROSS CONTRACTION OR CONSTRUCTION JOINTS.

SCHEMATIC SLAB-ON-GRADE

TYPICAL DETAIL
RE-ENTRANT CORNER BARS AT SLAB-ON-GRADE

7 SCALE: N.T.S.

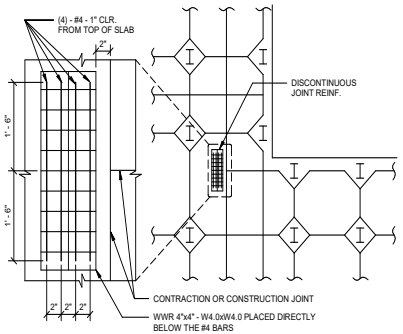

NOTE:
DISCONTINUOUS CONTRACTION OR CONSTRUCTION JOINTS SHOULD BE AVOIDED WHERE POSSIBLE.

TYPICAL DETAIL
ADDITIONAL REINFORCEMENT AT
DISCONTINUOUS JOINT IN SLAB-ON-GRADE

4 SCALE: N.T.S.

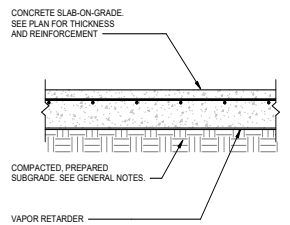

NOTE:
1. UNLESS SPECIFIED ELSEWHERE, VAPOR RETARDER SHALL BE A MINIMUM OF 15 MILS THICK (UNLESS THICKER SPECIFIED IN SPECS/ARCH. DRAWINGS) MEETING OR EXCEEDING ASTM E-1745, CLASS C, AND HAVE NO MORE THAN 0.01 PERMS WHEN TESTED IN ACCORDANCE WITH ASTM E-96.

TYPICAL DETAIL
SLAB-ON-GRADE CONSTRUCTION
SUBGRADE PREPARATION

1 SCALE: N.T.S.

4.1414

PROFESSIONAL SEAL
Matrix Structural Engineers
TBPE Firm Registration No. F-2640
STATE OF TEXAS
JAYNDOL A. KHAYRATTEE
68260
LICENSED PROFESSIONAL ENGINEER
01/14/2020

LOGO/CONTACT
MATRIX STRUCTURAL ENGINEERS
5177 Richmond Avenue, Suite 670
Houston, TX 77046-2401
Tel: 713.664.0133
Fax: 713.664.1370
MSE - 18135

DESIGN TEAM
Architectural
Martinez Architects
Civil Engineer
Maverick Engineering
Structural
Matrix Structural engineers
MEP
DBR
Landscaping
KDC Associates

FIRE STATION #11
CITY OF MIDLAND
Briarwood Ave & Golden Gate Dr
Midland, TX 79707

PROJECT No: **MA 18017**
DATE: **01/14/2020**

ISSUE
100% DESIGN DEVELOPMENT 22-MAY-2019
75% CONSTRUCTION DOCUMENT 26-JUN-2019
100% ISSUE FOR PERMIT 30-JUL-2019
100% ISSUE FOR APPROVAL TO BID 16-JAN-2020

FOUNDATION DETAILS

S301

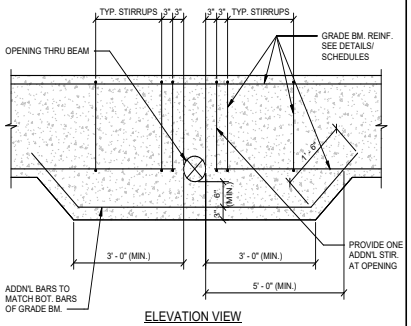

ELEVATION VIEW

TYPICAL DETAIL
OPENING THRU GRADE BEAM THAT CONFLICTS WITH BOTTOM REINFORCEMENT

9 SCALE: N.T.S.

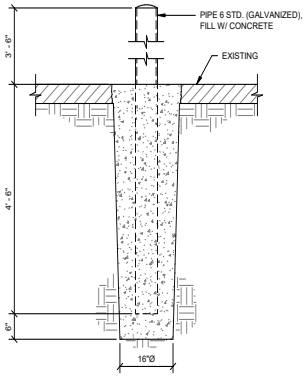

TYPICAL DETAIL
BOLLARD

6 SCALE: N.T.S.

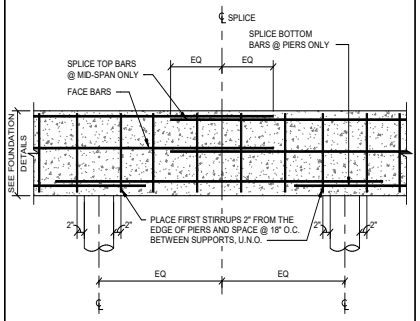

NOTES:
1. SLAB STEEL NOT SHOWN FOR CLARITY.
2. SEE TYPICAL DETAIL "TENSION DEVELOPMENT AND SPLICE LENGTH" FOR SPLICE DIMENSION.

TYPICAL DETAIL
BEAM REINFORCING SPLICE DETAIL

3 SCALE: N.T.S.

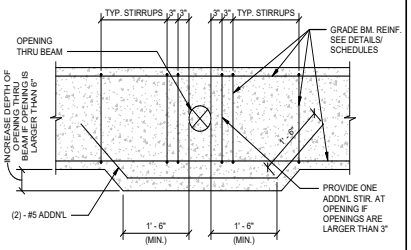

ELEVATION OF GRADE BEAM

TYPICAL DETAIL
OPENING THRU GRADE BEAM

8 SCALE: N.T.S.

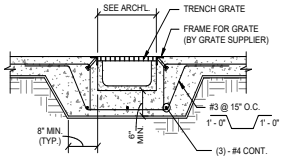

NOTES:
1. SEE ARCHITECTURAL DRAWINGS FOR ACTUAL LOCATION AND TRENCH SIZE.

TYPICAL DETAIL
TRENCH DRAIN

5 SCALE: N.T.S.

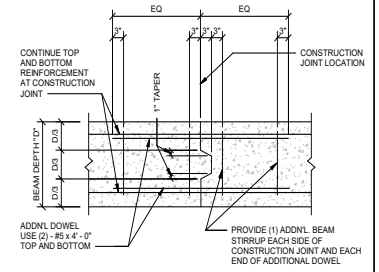

NOTES:
1. GENERAL CONTRACTOR SHALL SUBMIT DESIRED CONSTRUCTION JOINT LAYOUT AS A SHOP DRAWING FOR APPROVAL A MINIMUM OF TWO WEEKS PRIOR TO POUR.
2. CONSTRUCTION JOINT LOCATIONS SHALL BE COORDINATED WITH REINFORCING STEEL SUPPLIER AND ERECTOR.
3. JOINT LOCATIONS SHALL BE WITHIN TWO FEET EITHER SIDE OF BEAM MIDSPAN.
4. FOR JOINT LOCATIONS OTHER THAN WITHIN TWO FEET EITHER SIDE OF BEAM MIDSPAN, CONTRACTOR SHALL COORDINATE REQUIRED ADDITIONAL REINFORCEMENT WITH THE ENGINEER ON THE SHOP DRAWINGS.

TYPICAL DETAIL
GRADE BEAM CONSTRUCTION JOINT

2 SCALE: N.T.S.

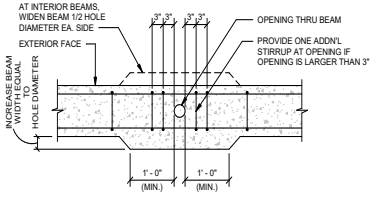

PLAN VIEW

TYPICAL DETAIL
VERTICAL HOLE THRU GRADE BEAM LARGER THAN 3" DIAMETER

7 SCALE: N.T.S.

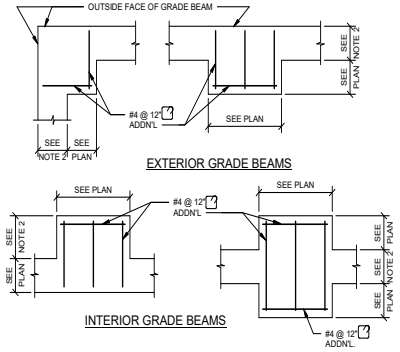

NOTES:
1. PLAN VIEWS FOR TYPICAL WIDENED GRADE BEAMS ARE SHOWN. FOR SIMILAR CONDITION NOT SHOWN, PROVIDE ☐ ADDN'L. @ 12" O.C. MAX. IN WIDENED SECTION.
2. SEE DETAIL SHEETS FOR GRADE BEAM WIDTH.

TYPICAL DETAIL
ADDITIONAL BARS AT WIDENED GRADE BEAM (PLAN VIEW)

4 SCALE: N.T.S.

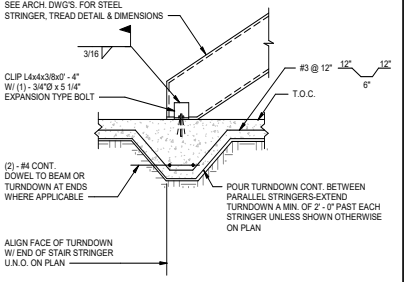

NOTES:
1. GENERAL CONTRACTOR IS RESPONSIBLE FOR THE COORDINATION OF STAIR STRINGER LOCATIONS WITH ARCHITECTURAL DRAWINGS & PROVIDE TURNDOWNS WHERE REQUIRED WHETHER SHOWN ON STRUCTURAL DRAWINGS OR NOT.
2. CLIP ANGLE TO BE HIDDEN BENEATH FIRST TREAD. WHERE OPEN RISERS ARE USED, COORDINATE THE LOCATION WITH THE ARCHITECT.

TYPICAL DETAIL
TURNDOWN AT STEEL STAIR SLAB-ON-GRADE

1 SCALE: N.T.S.

4.1415

PROFESSIONAL SEAL

Matrix Structural Engineers
TBPE Firm Registration No. F-2640

01/14/2020

LOGO/CONTACT

MATRIX STRUCTURAL ENGINEERS

5177 Richmond Avenue, Suite 670
Houston, TX 77046-2401
Tel: 713.664.0133
Fax: 713.664.1370
MSE - 18135

DESIGN TEAM

Architectural
Martinez Architects

Civil Engineer
Maverick Engineering

Structural
Matrix Structural engineers

MEP
DBR

Landscaping
KDC Associates

FIRE STATION #11
CITY OF MIDLAND
Briarwood Ave & Golden Gate Dr
Midland, TX 79707

PROJECT No: **MA 18017**
DATE: **01/14/2020**

ISSUE

100% DESIGN DEVELOPMENT 22-MAY-2019
75% CONSTRUCTION DOCUMENT 26-JUN-2019
100% ISSUE FOR PERMIT 30-JUL-2019
100% ISSUE FOR APPROVAL TO BID 16-JAN-2020

FOUNDATION DETAILS

S302

TENSION DEVELOPMENT LENGTHS AND TENSION LAP SPLICE LENGTHS GRADE 60 (UNCOATED) REINFORCEMENT (NORMAL WEIGHT CONCRETE)

BAR SIZE	F'c = 3000		F'c = 4000		F'c = 5000		F'c = 6000		F'c = 7000		F'c = 8000		F'c = 9000		F'c = 10000	
	CLASS A 1.0Ld	CLASS B 1.3Ld	CLASS A 1.0Ld	CLASS B 1.3Ld	CLASS A 1.0Ld	CLASS B 1.3Ld	CLASS A 1.0Ld	CLASS B 1.3Ld	CLASS A 1.0Ld	CLASS B 1.3Ld	CLASS A 1.0Ld	CLASS B 1.3Ld	CLASS A 1.0Ld	CLASS B 1.3Ld	CLASS A 1.0Ld	CLASS B 1.3Ld
#3	17	22	15	19	13	17	12	16	12	16	12	16	12	16	12	16
#4	22	29	19	25	17	23	16	21	15	19	14	18	13	17	12	16
#5	28	36	24	31	22	28	20	26	18	24	17	22	16	21	15	20
#6	33	43	29	37	26	34	24	31	22	28	21	27	19	25	18	24
#7	48	63	42	54	38	49	34	45	32	41	30	39	28	36	27	35
#8	55	72	48	62	43	56	39	51	36	47	34	44	32	42	30	39
#9	62	81	54	70	48	63	44	57	41	53	38	50	36	47	34	44
#10	70	91	61	79	54	71	50	64	46	60	43	56	41	53	39	50
#11	78	101	67	87	60	78	55	71	51	66	48	62	45	58	43	55

NOTES:
1. ALL LENGTHS SHOWN IN THE TABLE ARE IN INCHES.
2. Ld = TENSION DEVELOPMENT LENGTH.
3. THE ABOVE TABLE IS VALID FOR
   a. BEAMS AND COLUMNS WHERE CONCRETE COVER > = db, c/c BAR SPACING > = 2db AND WITH STIRRUPS OR TIES THROUGHOUT Ld NOT LESS THAN THE CODE MINIMUM.
   b. OTHER ELEMENTS SUCH AS SLABS, WALLS, ETC. WHERE CONCRETE COVER > = db, c/c BAR SPACING > = 3db.
4. FOR TOP BARS, MULTIPLY THE SPLICE LENGTHS BY 1.30. TOP BARS REQUIRE A MINIMUM OF 12" OF FRESH CONCRETE BELOW BAR.
5. WHEN BARS OF A DIFFERENT SIZE ARE LAP SPLICED IN TENSION, SPLICE LENGTH SHALL BE THE LARGER OF Ld OF THE LARGER BAR AND COMPRESSION LAP SPLICE LENGTH OF SMALLER BAR.
6. BARS SPLICED BY NON-CONTACT LAP SPLICES SHALL NOT BE SPACED TRANSVERSELY FARTHER APART THAN THE SMALLER OF ONE-FIFTH THE REQUIRED LAP SPLICE LENGTH AND 6 IN.

TYPICAL DETAIL
TENSION DEVELOPMENT AND SPLICE LENGTHS
(NORMAL WEIGHT CONCRETE)

12 SCALE: N.T.S.

COMPRESSION DEVELOPMENT LENGTHS AND COMPRESSION LAP SPLICE LENGTHS GRADE 60 (UNCOATED) REINFORCEMENT (NORMAL WEIGHT CONCRETE)

BAR SIZE	F'c = 3000		F'c = 4000		F'c ≥ 5000		BAR SIZE
	Ldc	Splice	Ldc	Splice	Ldc	Splice	
#3	9	12	8	12	8	12	#3
#4	11	15	10	15	9	15	#4
#5	14	19	12	19	12	19	#5
#6	17	23	15	23	14	23	#6
#7	20	27	17	27	16	27	#7
#8	22	30	19	30	18	30	#8
#9	25	34	22	34	21	34	#9
#10	28	39	25	39	23	39	#10
#11	31	43	27	43	26	43	#11
#14	38	51	33	51	31	51	#14
#18	50	68	43	68	41	68	#18

NOTES:
1. ALL LENGTHS SHOWN IN THE TABLE ARE IN INCHES.
2. Ldc = COMPRESSION DEVELOPMENT LENGTH.
3. THE ABOVE TABLE IS VALID FOR
   a. BEAMS AND COLUMNS WHERE CONCRETE COVER > = db, c/c BAR SPACING > = 2db AND WITH STIRRUPS OR TIES THROUGHOUT Ld NOT LESS THAN THE CODE MINIMUM.
   b. OTHER ELEMENTS SUCH AS SLABS, WALLS, ETC. WHERE CONCRETE COVER > = db, c/c BAR SPACING > = 3db.
4. WHEN BARS OF A DIFFERENT SIZE ARE LAP SPLICED IN COMPRESSION, SPLICE LENGTH SHALL BE THE LARGER OF Ldc OF THE LARGER BAR AND COMPRESSION LAP SPLICE LENGTH OF SMALLER BAR.
5. BARS SPLICED BY NON-CONTACT LAP SPLICES SHALL NOT BE SPACED TRANSVERSELY FARTHER APART THAN THE SMALLER OF ONE-FIFTH THE REQUIRED LAP SPLICE LENGTH AND 6 IN.

TYPICAL DETAIL
COMPRESSION DEVELOPMENT AND SPLICE LENGTHS
(NORMAL WEIGHT CONCRETE)

9 SCALE: N.T.S.

DEVELOPMENT LENGTHS OF STANDARD HOOKS IN TENSION GRADE 60 (UNCOATED) REINFORCEMENT (NORMAL WEIGHT CONCRETE)

BAR SIZE	F'c = 3000		F'c = 4000		F'c = 5000		F'c = 6000		F'c = 7000		F'c = 8000		F'c = 9000		F'c = 10000	
	Lhb	0.7Lhb	Lhb	0.7Lhb	Lhb	0.7Lhb	Lhb	0.7Lhb	Lhb	0.7Lhb	Lhb	0.7Lhb	Lhb	0.7Lhb	Lhb	0.7Lhb
#3	9	6	8	6	7	6	6	6	6	6	6	6	6	6	6	6
#4	11	8	10	7	9	6	8	6	8	6	7	6	7	6	6	6
#5	14	10	12	9	11	8	10	7	9	7	9	6	8	6	8	6
#6	17	12	15	10	13	9	12	9	11	8	11	8	10	7	9	7
#7	20	14	17	12	15	11	14	10	13	9	12	9	12	8	11	8
#8	22	16	19	14	17	12	16	11	15	11	14	10	13	9	12	9
#9	25	18	22	15	20	14	18	13	17	12	16	11	15	10	14	10
#10	28	20	25	17	22	16	20	14	19	13	18	12	17	12	16	11
#11	31	22	27	19	24	17	22	16	21	15	19	14	18	13	17	12

90° HOOKS

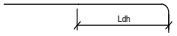

180° HOOKS

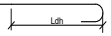

NOTES:
1. ALL LENGTHS SHOWN IN THE TABLE ARE IN INCHES.
2. Lhb = TENSION DEVELOPMENT LENGTH.
3. Ldh = Lhb, UNLESS CONDITIONS OF ITEM 4 ARE SATISFIED
4. Ldh = 0.7 Lhb, WHEN SIDE COVER NORMAL TO PLANE OF HOOK IS NOT LESS THAN 2 1/2 INCHES AND FOR 90° HOOK, COVER ON BAR EXTENSION BEYOND HOOK SHALL NOT BE LESS THAN 2 INCHES.
5. HOOKS SHALL NOT BE CONSIDERED EFFECTIVE IN DEVELOPING BARS IN COMPRESSION.

TYPICAL DETAIL
DEVELOPMENT LENGTH OF STANDARD HOOKS IN TENSION
(NORMAL WEIGHT CONCRETE)

6 SCALE: N.T.S.

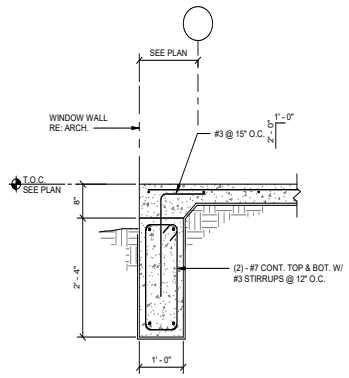

TYPICAL DETAIL
EXTERIOR GRADE BEAM
AT WINDOW WALL

3 SCALE: 3/4" = 1'-0"

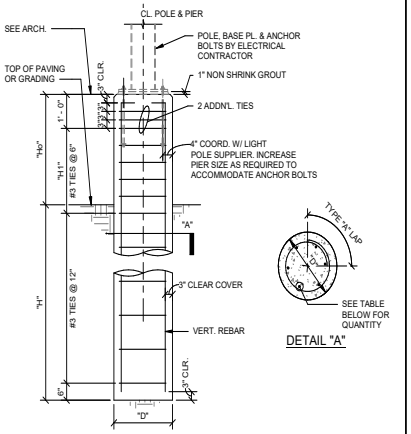

POLE MARK	NOM. POLE HEIGHT	ASSUMED EPA (sf)	"H" DEPTH OF PIER	"Ho" ABOVE GRADE	"H1"	"D" DIAMETER OF PIER	VERTICAL REINF	TIES	REMARKS
LP1	15' - 0"	5.0	5' - 0"	RE: ARCH.	1' - 6"	24"	6 - #6	#3 @ 12"	TYPICAL PARKING
LP2	25' - 0"	10.0	8' - 0"	RE: ARCH.	1' - 6"	24"	6 - #6	#3 @ 12"	TYPICAL PARKING
LP3	35' - 0"	10.0	10' - 0"	RE: ARCH.	1' - 6"	24"	6 - #7	#3 @ 12"	

NOTES:
1. WIND LOAD CRITERIA IS PER IBC 2012. Vult = 140 MPH.
2. CONCRETE COMPRESSIVE STRENGTH, F'C = 3,000 PSI (NWC), WITH A MAX WATER/CEMENT RATIO OF 0.54.
3. STEEL REINFORCEMENT SHALL BE ASTM A615, GR. 60.
4. REFER TO ARCH DRAWINGS/CIVIL DRAWINGS FOR LOCATIONS OF LIGHT POLES.
5. REFER TO ELECTRICAL DRAWINGS FOR ADDITIONAL INFORMATION (AND SPECIFICATIONS FOR LIGHT STANDARDS).
6. VERIFY PROJECTION OF CONCRETE ABOVE GROUND WITH ARCHITECT.
7. EPA INDICATES MAXIMUM EXPOSED PROJECTED AREA AT THE TOP OF THE POLE IN ANY DIRECTION.
8. FOR A STATED POLE HEIGHT SHOWN ON THE TABLE, THE DEPTH OF PIER IS DEEMED ADEQUATE IF EPA IS LESS THAN SHOWN ON TABLE ABOVE.

TYPICAL DETAIL
LIGHT POLE FOUNDATION

10 SCALE: N.T.S.

MIN. 'L' DEPTH			
MAX. POLE HEIGHT (ft.)	MAX. FLAG AREA ft²	'L1'	'L2'
20	24	4' - 0"	3' - 0"
25	30	5' - 0"	4' - 0"
30	60	5' - 6"	4' - 6"
35	60	6' - 0"	4' - 6"
45	96	7' - 6"	5' - 6"
50	150	8' - 6"	6' - 6"

NOTES:
1. CONCRETE SHALL HAVE A 28 DAY COMPRESSIVE STRENGTH OF 3000 PSI WITH A MAXIMUM AGGREGATE SIZE OF 1 1/2" AND A MAXIMUM WATER / CEMENT RATIO OF 0.54.
2. ALL REINFORCEMENT SHALL CONFORM TO ASTM A615, GR. 60.
3. ASSUMPTIONS FOR FOUNDATION DESIGN INCLUDE A 5'-12", 20-50 FT. POLE W/ FIXTURES AND A MAXIMUM FLAG AREA OF 24-150 SQ. FT.
4. SEE MNFR. DRAWINGS AND SPECIFICATIONS FOR ADDITIONAL INFORMATION AND REQUIREMENTS.
5. WIND LOAD CRITERIA IS PER IBC 2012, Vult = 140 MPH.
6. FOR A STATED POLE HEIGHT SHOWN ON THE TABLE, THE DEPTH OF PIER IS DEEMED ADEQUATE IF EPA IS LESS THAN SHOWN ON TABLE ABOVE.
7. USE DEPTH 'L2' WHERE FLAG POLE IS CONFINED BY PAVING, AT BASE, OTHERWISE USE NOTE 4.

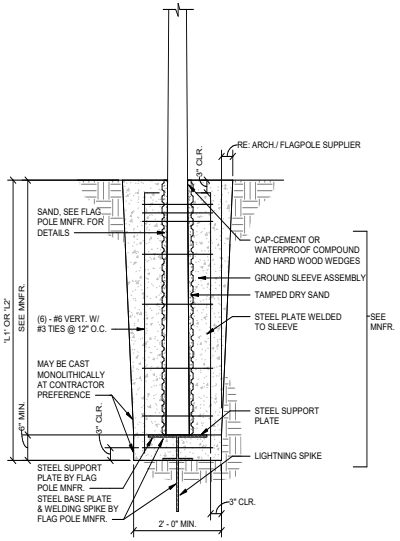

TYPICAL DETAIL
FLAG POLE FOUNDATION

7 SCALE: N.T.S.

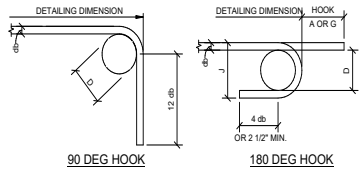

RECOMMENDED END HOOKS, ALL GRADES					
BAR SIZE	FINISHED BEND DIAMETER D, (IN.)	180 DEG. HOOKS		90 DEG. HOOKS	
		A OR G, (IN.)	J, (IN.)	A OR G, (IN.)	
#3	2 1/4	5	3	6	
#4	3	6	4	8	
#5	3 3/4	7	5	10	
#6	4 1/2	8	6	12	
#7	5 1/4	10	7	14	
#8	6	11	8	16	
#9	9 1/2	15	11 3/4	19	
#10	10 3/4	17	13 1/4	22	
#11	12	19	14 3/4	24	
#14	18 1/4	27	21 3/4	31	
#18	24	36	28 1/2	41	

D = INSIDE DIAMETER OF BEND

END HOOK TYPES

5 SCALE: N.T.S.

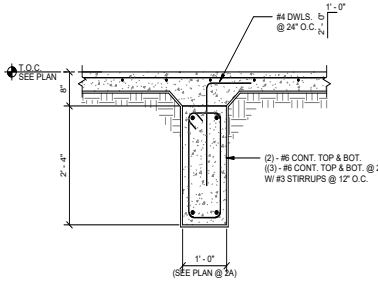

TYPICAL DETAIL
INTERIOR GRADE BEAM

2A 2 SCALE: 3/4" = 1'-0"

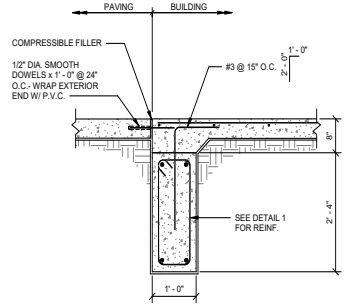

TYPICAL DETAIL
EXTERIOR GRADE BEAM
AT DOORS/FLATWORK

4 SCALE: 3/4" = 1'-0"

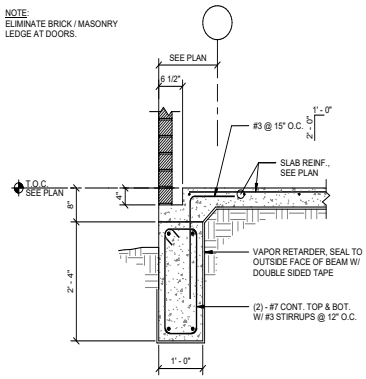

TYPICAL DETAIL
EXTERIOR GRADE BEAM

1 SCALE: 3/4" = 1'-0"

4.1416

PROFESSIONAL SEAL
Matrix Structural Engineers
TBPE Firm Registration No. F-2640

01/14/2020

LOGO/CONTACT

MATRIX STRUCTURAL ENGINEERS

5177 Richmond Avenue, Suite 670
Houston, TX 77046-2401
Tel: 713.664.0133
Fax: 713.664.1370
MSE - 18135

DESIGN TEAM

Architectural
Martinez Architects

Civil Engineer
Maverick Engineering

Structural
Matrix Structural engineers

MEP
DBR

Landscaping
KDC Associates

FIRE STATION #11

CITY OF MIDLAND
Briarwood Ave & Golden Gate Dr
Midland, TX 79707

PROJECT No: **MA 18017**
DATE: **01/14/2020**

ISSUE
100% DESIGN DEVELOPMENT 22-MAY-2019
75% CONSTRUCTION DOCUMENT 26-JUN-2019
100% ISSUE FOR PERMIT 30-JUL-2019
100% ISSUE FOR APPROVAL TO BID 16-JAN-2020

FOUNDATION DETAILS

S303

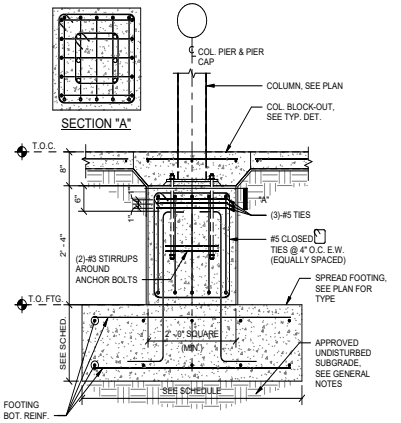

TYPICAL DETAIL
INTERIOR COLUMN ON SPREAD FOOTING

9 SCALE: 3/4" = 1'-0"

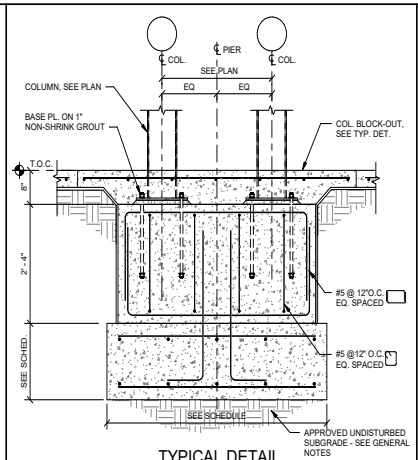

TYPICAL DETAIL
SHARED PLINTH

6 SCALE: 3/4" = 1'-0"

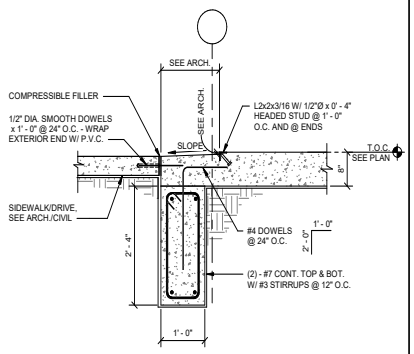

SLAB EDGE AT OVERHEAD DOORS

3 SCALE: 3/4" = 1'-0"

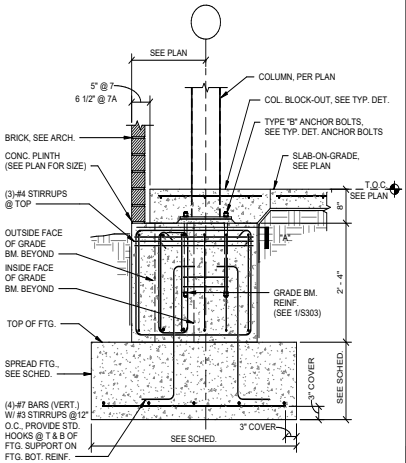

TYPICAL DETAIL
EXTERIOR GRADE BEAM AT BRACE
COLUMN AT MASONRY

7A
7 SCALE: 3/4" = 1'-0"

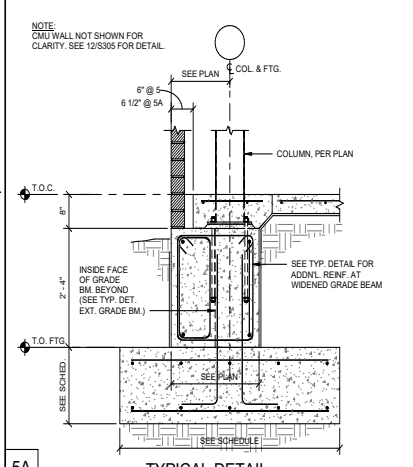

5A

TYPICAL DETAIL
EXTERIOR GRADE BEAM AT COLUMN

5 SCALE: 3/4" = 1'-0"

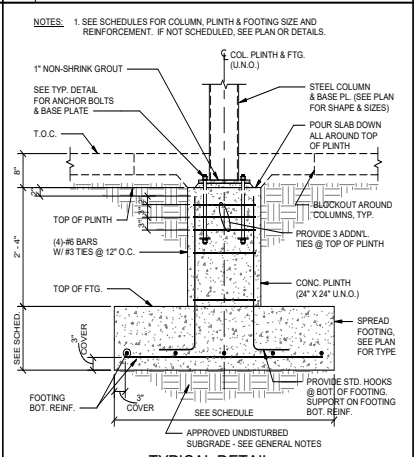

TYPICAL DETAIL
EXTERIOR STEEL COLUMN ON SPREAD
FOOTING CONCRETE PLINTH

2 SCALE: 3/4" = 1'-0"

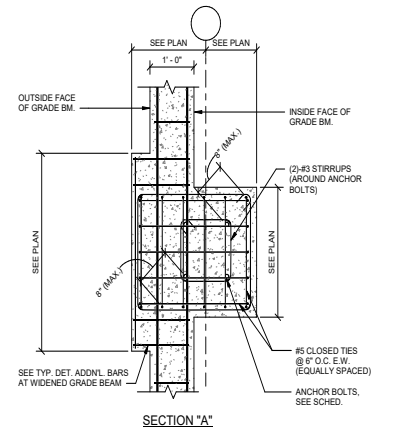

7A
TYPICAL DETAIL
EXTERIOR GRADE BEAM AT BRACE
COLUMN AT MASONRY

7 SCALE: 3/4" = 1'-0"

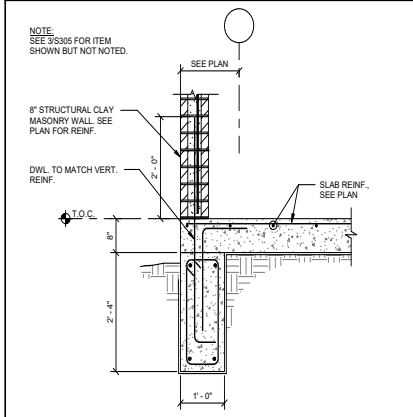

TYPICAL DETAIL
EXTERIOR GRADE BEAM

4 SCALE: 3/4" = 1'-0"

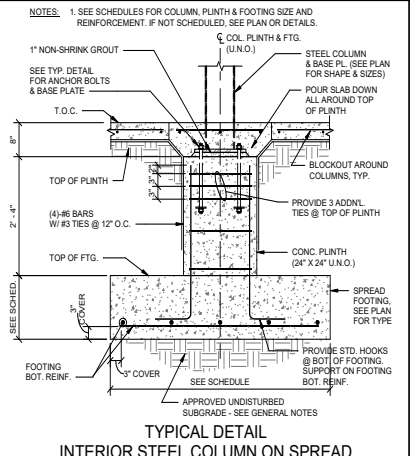

TYPICAL DETAIL
INTERIOR STEEL COLUMN ON SPREAD
FOOTING CONCRETE PLINTH

1 SCALE: 3/4" = 1'-0"

4.1417

PROFESSIONAL SEAL

Matrix Structural Engineers
TBPE Firm Registration No. F-2640

01/14/2020

LOGO/CONTACT

MATRIX STRUCTURAL ENGINEERS

5177 Richmond Avenue, Suite 670
Houston, TX 77046-2401
Tel: 713.664.0133
Fax: 713.664.1370
Firm Data
MSE - 18135

DESIGN TEAM

Architectural
Martinez Architects

Civil Engineer
Maverick Engineering

Structural
Matrix Structural engineers

MEP
DBR

Landscaping
KDC Associates

FIRE STATION #11

CITY OF MIDLAND

Briarwood Ave & Golden Gate Dr
Midland, TX 79707

PROJECT No: **MA 18017**
DATE: **01/14/2020**

ISSUE

100% DESIGN DEVELOPMENT
22-MAY-2019

75% CONSTRUCTION DOCUMENT
26-JUN-2019

100% ISSUE FOR PERMIT
30-JUL-2019

100% ISSUE FOR APPROVAL TO BID
16-JAN-2020

FOUNDATION DETAILS

S304

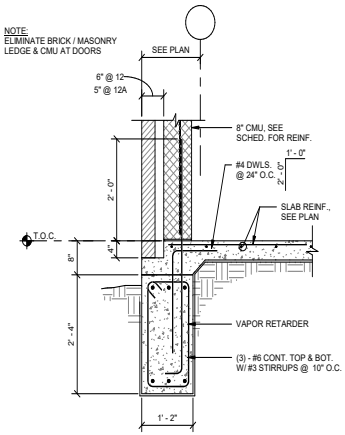

12A

TYPICAL DETAIL
EXTERIOR GRADE BEAM

12 SCALE: 3/4" = 1'-0"

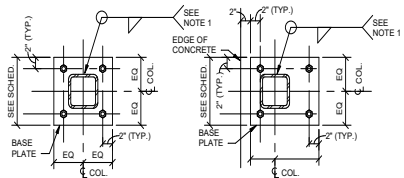

BASE PLATE SCHEDULE		
COLUMN	BASE PLATE	ANCHOR BOLTS
HSS 6 x 6	14" x 14" x 3/4"	(4)-3/4"Ø TYPE A
HSS 5 x 5	12" x 12" x 3/4"	(4)-3/4"Ø TYPE A

NOTES:
1. MINIMUM FILLET WELD ACCORDING TO AISC (1/4" MIN.). WELDING AROUND CORNER RADIUS IS NOT REQUIRED U.N.O.
2. USE OVERSIZED HOLES FOR ANCHOR RODS ACCORDING TO AISC.
3. WASHERS SHALL BE INSTALLED OVER OVERSIZED HOLES.
4. CONTRACTOR SHALL PROVIDE 1/8" THICK TEMPLATE FOR ANCHOR ROD INSTALLATION.

9 SCALE: N.T.S.

TYPICAL DETAIL
BASE PLATE AT HSS COLUMNS

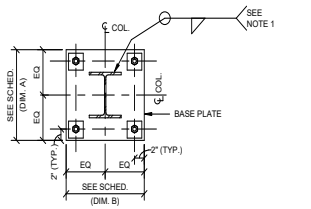

BASE PLATE AT W COLUMN

BASE PLATE SCHEDULE				
TYPE	BASE PLATE A x B x THICKNESS	ANCHOR BOLTS	BASE PLATE MATERIAL	WELD SIZE 'X' FOR BASE PLATE*
BP-2	16" x 16" x 1 1/4"	(4)-1"Ø TYPE B	ASTM A36	5/16"

* - PARTIAL PENETRATION GROOVE WELDS OF EQUAL CAPACITY OR COMPLETE JOINT PENETRATION GROOVE WELDS ARE ALSO ACCEPTABLE.

NOTES:
1. WELDING AROUND CORNER RADIUS IS NOT REQUIRED U.N.O.
2. USE OVERSIZED HOLES FOR ANCHOR RODS ACCORDING TO AISC.
3. WASHERS SHALL BE INSTALLED OVER OVERSIZED HOLES.
4. CONTRACTOR SHALL PROVIDE 1/8" THICK TEMPLATE FOR ANCHOR ROD INSTALLATION.
5. AT CONTRACTOR PREFERENCE BASE PLATE MAY BE SUBSTITUTED WITH 50 KSI STEEL ALTERNATE SHOWN.
6. GROUT HOLE DIAMETER MAY MATCH BOLT HOLE DIAMETER AT CONTRACTOR PREFERENCE.
7. GUSSET PLATE WELD TO BE DESIGNED BY FABRICATOR FOR FORCES SHOWN ON BRACE ELEVATIONS, BUT SHALL NOT BE LESS THAN THE SIZE SHOWN.

6 SCALE: N.T.S.

TYPICAL DETAIL
BASE PLATE AT WIDE FLANGE COLUMNS

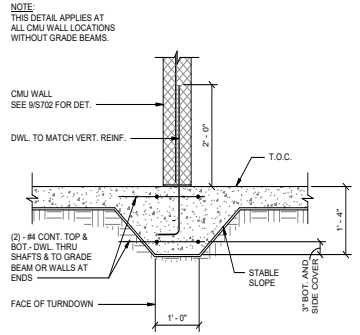

3 SCALE: N.T.S.

TYPICAL DETAIL
TURNDOWN AT CMU WALL

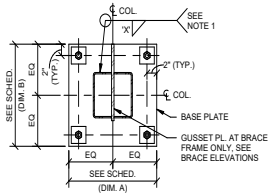

BP-1

NOTES:
1. WELDING AROUND CORNER RADIUS IS NOT REQUIRED U.N.O.
2. USE OVERSIZED HOLES FOR ANCHOR RODS ACCORDING TO AISC.
3. WASHERS SHALL BE INSTALLED OVER OVERSIZED HOLES.
4. CONTRACTOR SHALL PROVIDE 1/8" THICK TEMPLATE FOR ANCHOR ROD INSTALLATION.
5. AT CONTRACTOR PREFERENCE BASE PLATE MAY BE SUBSTITUTED WITH 50 KSI STEEL ALTERNATE SHOWN.
6. GROUT HOLE DIAMETER MAY MATCH BOLT HOLE DIAMETER AT CONTRACTOR PREFERENCE.
7. GUSSET PLATE WELD TO BE DESIGNED BY FABRICATOR FOR FORCES SHOWN ON BRACE ELEVATIONS, BUT SHALL NOT BE LESS THAN THE SIZE SHOWN.

BASE PLATE SCHEDULE				
TYPE	BASE PLATE A x B x THICKNESS	ANCHOR BOLTS	BASE PLATE MATERIAL	WELD SIZE 'X' FOR BASE PLATE*
BP-1	14" x 14" x 1"	(4)-1"Ø TYPE B	ASTM A36	1/4"

* - PARTIAL PENETRATION GROOVE WELDS OF EQUAL CAPACITY OR COMPLETE JOINT PENETRATION GROOVE WELDS ARE ALSO ACCEPTABLE.

11 SCALE: N.T.S.

TYPICAL DETAIL
BASE PLATE AT BRACE HSS COLUMNS

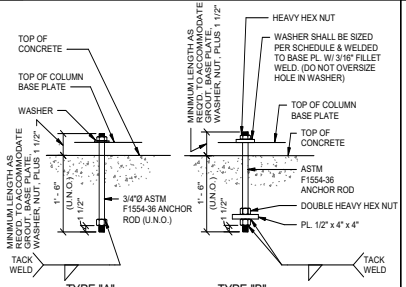

TYPE "B" WASHER SCHEDULE		
ANCHOR ROD DIA.	WASHER SIZE*	MIN. WASHER THICKNESS
3/4"	2"	1/4"
7/8"	2 1/2"	5/16"
1"	3"	3/8"
1 1/4"	3 1/2"	1/2"
1 1/2"	4"	1/2"
1 3/4"	4 1/2"	5/8"
2"	5"	3/4"
2 1/2"	5 1/2"	7/8"

NOTE:
USE TYPE "B" ANCHOR BOLTS AT COLUMNS WITH DIAGONAL BRACES, MOMENT CONNECTIONS, & AT CANOPY COLUMNS

*CIRCULAR OR SQUARE WASHERS MEETING WASHER SIZE ARE ACCEPTABLE

5 SCALE: N.T.S.

TYPICAL DETAIL ANCHOR BOLT

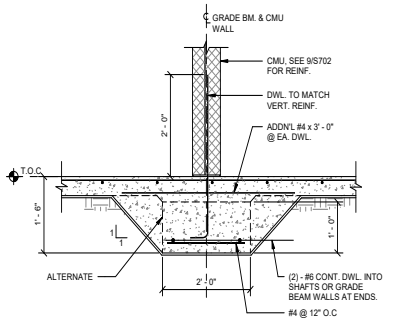

2 SCALE: N.T.S.

TYPICAL DETAIL
AT NON-LOAD BEARING CMU WALL

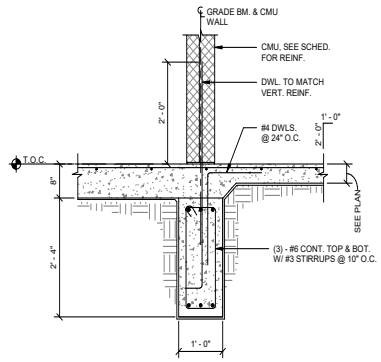

7 SCALE: 3/4" = 1'-0"

TYPICAL DETAIL
INTERIOR GRADE BEAM
AT NON-LOAD BEARING WALL

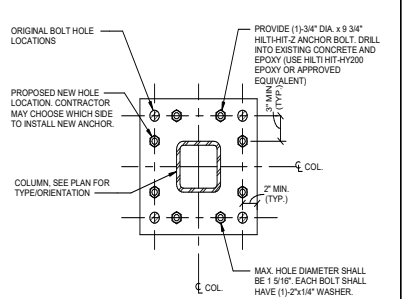

NOTES:
1. THIS DETAIL SHALL NOT BE USED AT BRACE FRAMES OR MOMENT FRAMES. ENGINEER APPROVAL IS REQUIRED PRIOR TO INSTALLATION FOR EA. LOCATION WITH DAMAGED ANCHOR BOLTS.
2. CUT AWAY DAMAGED ANCHOR BOLTS AND PROVIDE NEW HOLES FOR EPOXY ANCHOR.
3. HIT-Z-R ANCHORS SHALL BE USED IN LIEU OF HIT-Z ANCHORS AT COLUMNS EXPOSED TO WEATHER.

4 SCALE: N.T.S.

TYPICAL DETAIL
REPAIR AT GRAVITY BASE PLATE

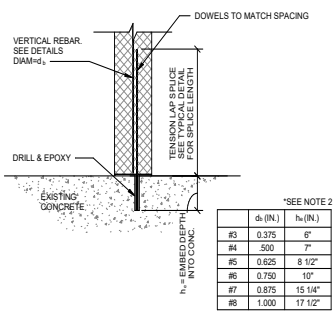

	d_b (IN.)	h_e (IN.)
#3	0.375	6"
#4	.500	7"
#5	0.625	8 1/2"
#6	0.750	10"
#7	0.875	15 1/4"
#8	1.000	17 1/2"

*SEE NOTE 2

NOTES:
1. THIS DETAIL MAY BE USED IN LIEU OF CAST-IN-PLACE DOWELS WHERE SHOWN ON STRUCTURAL DETAILS EXCEPT WHERE PROHIBITED BY NOTE 2.
2. THIS DETAIL IS NOT APPLICABLE AT CANTILEVER WALLS OR WALLS SUBJECTED TO MOMENT AT THE BASE.
3. USE HILTI HIT-HY200 ADHESIVE SYSTEM OR APPROVED EQUIVALENT.

1 SCALE: N.T.S.

ALTERNATE DETAIL
EPOXY DOWELS AT CMU WALLS

PROFESSIONAL SEAL
Matrix Structural Engineers
TBPE Firm Registration No. F-2640
JAYNOOL A. KHAYATTEE
68260
LICENSED PROFESSIONAL ENGINEER
01/14/2020

LOGO/CONTACT
MATRIX STRUCTURAL ENGINEERS
5177 Richmond Avenue, Suite 670
Houston, TX 77046-2401
Tel: 713.664.0133
Fax: 713.664.1370
MSE - 18135

DESIGN TEAM

Architectural
Martinez Architects

Civil Engineer
Maverick Engineering

Structural
Matrix Structural engineers

MEP
DBR

Landscaping
KDC Associates

FIRE STATION #11

CITY OF MIDLAND
Briarwood Ave & Golden Gate Dr
Midland, TX 79707

PROJECT No: **MA 18017**
DATE: **01/14/2020**

ISSUE
100% DESIGN DEVELOPMENT 22-MAY-2019
75% CONSTRUCTION DOCUMENT 26-JUN-2019
100% ISSUE FOR PERMIT 30-JUL-2019
100% ISSUE FOR APPROVAL TO BID 16-JAN-2020

FOUNDATION DETAILS

S305

4.1418

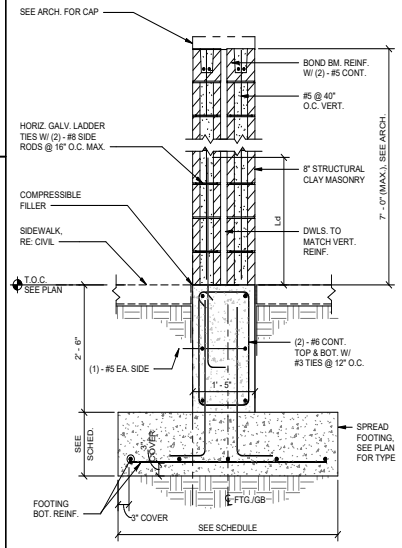

TYPICAL DETAIL
GRADE BEAM AT FREESTANDING WALL

2 SCALE: 3/4" = 1'-0"

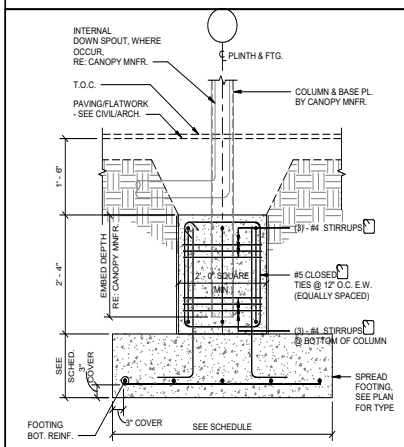

TYPICAL DETAIL EMBEDDED EXTERIOR
CANOPY COLUMN WITH PIER CAP

3 SCALE: 3/4" = 1'-0"

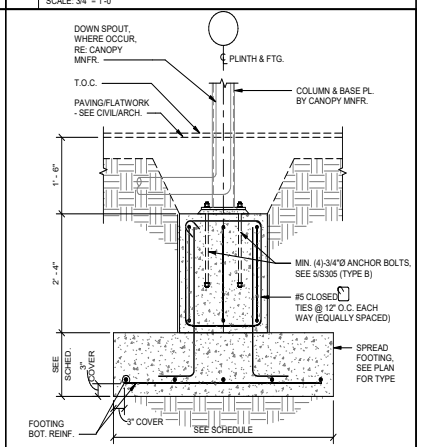

TYPICAL DETAIL
EXTERIOR CANOPY COLUMN WITH PIER CAP

1 SCALE: 3/4" = 1'-0"

PROFESSIONAL SEAL

Matrix Structural Engineers
TBPE Firm Registration No. F-2640

STATE OF TEXAS
JAYNOOL A. KHAYRATTEE
68260
LICENSED PROFESSIONAL ENGINEER

01/14/2020

LOGO/CONTACT

MATRIX
STRUCTURAL
ENGINEERS

5177 Richmond Avenue, Suite 670
Houston, TX 77046-2401
Tel: 713.664.0135
Fax: 713.664.1370
MSE - 18135

DESIGN TEAM

Architectural
Martinez Architects

Civil Engineer
Maverick Engineering

Structural
Matrix Structural engineers

MEP
DBR

Landscaping
KDC Associates

FIRE STATION #11

CITY OF MIDLAND

Briarwood Ave & Golden Gate Dr
Midland, TX 79707

PROJECT No: **MA 18017**
DATE: **01/14/2020**

ISSUE

100% DESIGN DEVELOPMENT
22-MAY-2019

75% CONSTRUCTION DOCUMENT
26-JUN-2019

100% ISSUE FOR PERMIT
30-JUL-2019

100% ISSUE FOR APPROVAL TO BID
16-JAN-2020

FOUNDATION DETAILS

S306

4.1419

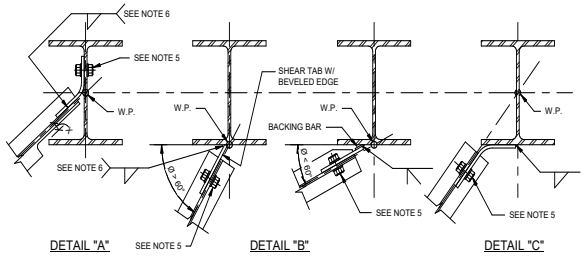

NOTES:
1. FABRICATOR SHALL ASSUME WORK POINT TO BE LOCATED AT CENTERLINE OF COLUMN FOR VALUES OF X >= 1" AND PROVIDE CONNECTION AS SPECIFIED IN DETAIL "A". FABRICATOR SHALL ASSUME LOCATION OF WORK POINT TO BE AT COLUMN FLANGE-WEB INTERSECTION AND PROVIDE CONNECTION AS SPECIFIED IN DETAIL B WHERE CLEARANCE DOES NOT EXIST FOR DETAIL "A" TO APPLY. FABRICATOR SHALL APPLY DETAIL "C" ONLY WHEN LOCATION OF WORK POINT MUST BE LOCATED AT COLUMN CENTERLINE AND CLEARANCE DOES NOT EXIST FOR DETAIL "A" TO APPLY. LOCATION OF WORK POINTS SHALL BE APPROVED BY THE ENGINEER PRIOR TO SHOP DRAWING SUBMITTAL.
2. SHEAR TAB CONNECTION MAY BE USED ONLY WHERE WORK POINT IS AT INTERSECTION OF COLUMN FLANGE AND WEB.
3. SINGLE BENT PLATES SHALL BE DESIGNED FOLLOWING PROCEDURES OUTLINED IN THE AISC MANUAL.
4. REFER TO GENERAL NOTES FOR CONNECTION DESIGN CRITERIA.
5. BOLTED CONNECTION, REFER TO GENERAL NOTES.
6. SHOP WELDED CONNECTION TO DEVELOP BEAM REACTION. REFER TO GENERAL NOTES.

TYPICAL DETAIL
SKEWED STEEL BEAM TO WIDE FLANGE COLUMN SHEAR CONNECTION

12 SCALE: N.T.S.

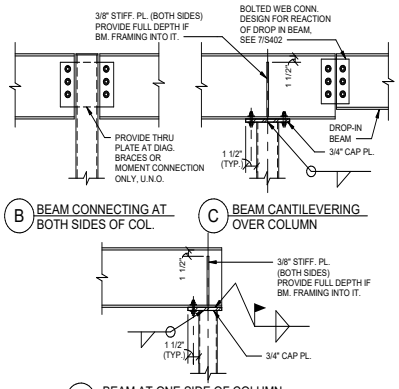

TYPICAL DETAIL
STEEL BEAM TO
TUBE/PIPE - COL.

6 SCALE: N.T.S.

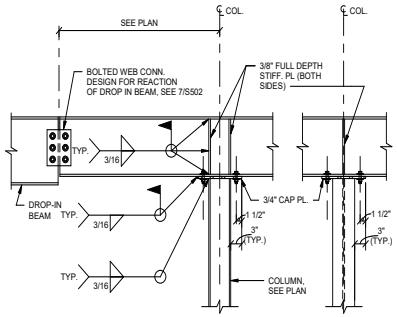

NOTE:
1. JOISTS, METAL DECK AND BRACES NOT SHOWN FOR CLARITY. SEE PLAN FOR BRACE LOCATIONS.

TYPICAL DETAIL
CANTILEVER BEAM
OVER COLUMN CONNECTION

3 SCALE: N.T.S.

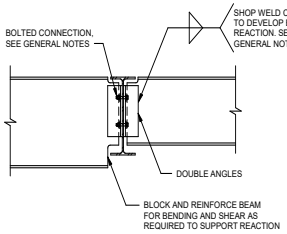

NOTES :
1. REFER TO GENERAL NOTES FOR BEAM REACTION DESIGN CRITERIA.
2. PROVIDE PRE-DESIGNED CONNECTIONS AS SHOWN IN AISC MANUAL PART 4 WHERE APPLICABLE.
3. REFER TO GENERAL NOTES FOR BOLT TYPE.
4. ALL CONNECTIONS SHALL MEET THE ROTATIONAL DUCTILITY AND STABILITY REQUIREMENTS PROVIDED BY AISC.

TYPICAL DETAIL
BEAM TO BEAM DOUBLE ANGLE
SHEAR CONNECTION

5 SCALE: N.T.S.

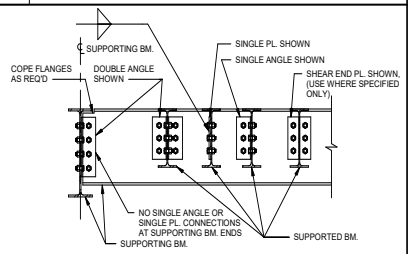

NOTES:
1. REFER TO GENERAL NOTES FOR BEAM REACTION DESIGN CRITERIA.
2. PROVIDE PRE-DESIGNED CONNECTIONS AS SHOWN IN AISC MANUAL WHERE APPLICABLE.
3. REFER TO GENERAL NOTES FOR BOLT TYPE.
4. SUPPORTED BEAMS PRIMARILY SUPPORT DISTRIBUTED LOADS FROM SLABS OR DECKING.
5. SUPPORTING BEAMS SUPPORT SIGNIFICANT POINT LOADS FROM ONE OR MORE SUPPORTED BEAMS OR FROM COLUMNS BEING TRANSFERRED. SUPPORTING BEAMS MAY BE SUPPORTED BY COLUMNS OR BY OTHER SUPPORTING BEAMS.
6. FOR AISC SIMPLE SHEAR CONNECTIONS AT SUPPORTED BEAM ENDS, USE DOUBLE ANGLE, SINGLE PLATE, OR SINGLE ANGLE U.N.O.
7. WELDED/BOLTED, WELDED/WELDED OR BOLTED/BOLTED CONNECTIONS PER AISC ARE PERMITTED.
8. ALL CONNECTIONS SHALL MEET THE ROTATIONAL DUCTILITY AND STABILITY REQUIREMENTS PROVIDED BY AISC.

TYPICAL DETAIL
BEAM TO BEAM SHEAR
CONNECTION (4 TYPES)

2 SCALE: N.T.S.

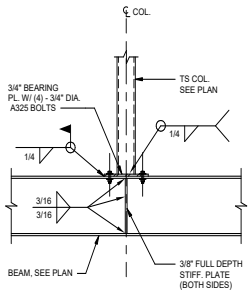

TYPICAL DETAIL
STUB COLUMN ON STEEL BEAM

7 SCALE: N.T.S.

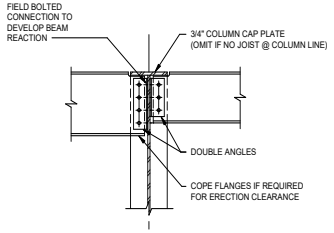

NOTES :
1. REFER TO GENERAL NOTES FOR BEAM REACTION DESIGN CRITERIA.
2. PROVIDE PRE-DESIGNED CONNECTIONS AS SHOWN IN AISC MANUAL WHERE APPLICABLE.
3. REFER TO GENERAL NOTES FOR BOLT TYPE.

TYPICAL DETAIL
STEEL BEAM TO WF COLUMN
DOUBLE ANGLE SHEAR CONNECTION

4 SCALE: N.T.S.

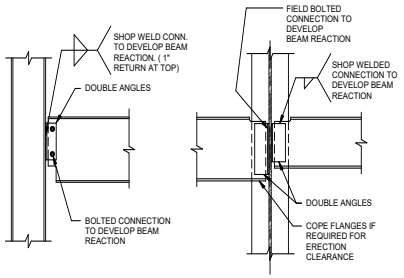

NOTES:
1. DOUBLE ANGLES MAY BE SHOP WELDED TO THE BEAM AND FIELD BOLTED TO THE COLUMN AT CONTRACTOR'S OPTION.
2. REFER TO GENERAL NOTES FOR BEAM REACTION DESIGN CRITERIA.
3. PROVIDE PRE-DESIGNED CONNECTIONS AS SHOWN IN AISC MANUAL WHERE APPLICABLE.
4. REFER TO GENERAL NOTES FOR BOLT TYPE.

TYPICAL DETAIL
STEEL BEAM TO WIDE FLANGE COLUMN
DOUBLE ANGLE SHEAR CONNECTION

1 SCALE: N.T.S.

4.1420

PROFESSIONAL SEAL
Matrix Structural Engineers
TBPE Firm Registration No. F-2640
STATE OF TEXAS
JAYADOLA. KHAYRATTEE
68260
LICENSED PROFESSIONAL ENGINEER
01/14/2020

LOGO/CONTACT
MATRIX STRUCTURAL ENGINEERS
5177 Richmond Avenue, Suite 670
Houston, TX 77046-2401
Tel: 713.664.0133
Fax: 713.664.1370
MSE - 18135

DESIGN TEAM

Architectural
Martinez Architects

Civil Engineer
Maverick Engineering

Structural
Matrix Structural engineers

MEP
DBR

Landscaping
KDC Associates

FIRE STATION #11

CITY OF MIDLAND
Briarwood Ave & Golden Gate Dr
Midland, TX 79707

PROJECT No: **MA 18017**
DATE: **01/14/2020**

ISSUE
100% DESIGN DEVELOPMENT 22-MAY-2019
75% CONSTRUCTION DOCUMENT 26-JUN-2019
100% ISSUE FOR PERMIT 30-JUL-2019
100% ISSUE FOR APPROVAL TO BID 16-JAN-2020

FRAMING DETAILS

S401

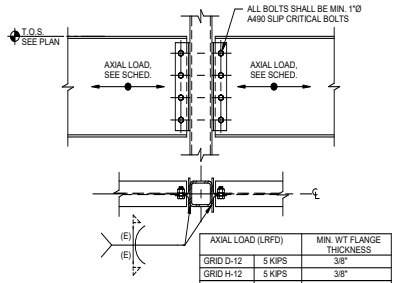

AXIAL LOAD (LRFD)		MIN. WT FLANGE THICKNESS
GRID D-12	5 KIPS	3/8"
GRID H-12	5 KIPS	3/8"
SC2	5 KIPS	3/8"
GRID M.9-12	5 KIPS	3/8"
GRID D-14	5 KIPS	3/8"
GRID H-14	5 KIPS	3/8"
GRID J-14	5 KIPS	3/8"
GRID M.2-14	5 KIPS	3/8"

NOTES:
1. REFER TO GENERAL NOTES FOR BEAM REACTION DESIGN CRITERIA, WELDS/BOLTS SHALL BE DESIGNED TO WITHSTAND AN ADDITIONAL AXIAL LOAD (LRFD), ACTING SIMULTANEOUS TO THE END REACTION, SEE SCHEDULE.
2. APPLY THIS DETAIL AT ALL CONNECTIONS MARKED (SC) & (SC2) ON PLAN.
3. ALLOWABLE STRENGTH OF BOLTS SHALL BE BASED ON A CLASS A FAYING SURFACE, DO NOT PAINT STEEL AT SLIP CRITICAL CONNECTIONS.
4. WELD SIZES W & E SHALL MEET AISC MIN. SIZE TO ENSURE ROTATIONAL DUCTILITY.
5. WT WEB THICKNESS SHALL NOT EXCEED 7/16".
6. EITHER WELDED/BOLTED OR WELDED/WELDED CONNECTIONS ARE ACCEPTABLE.
7. THE FLANGES SHALL BE DESIGNED FOR OUT OF PLANE BENDING DUE TO AXIAL LOAD.
8. ALL CONNECTIONS SHALL MEET THE ROTATIONAL DUCTILITY AND STABILITY REQUIREMENTS PROVIDED BY AISC.

ALTERNATE DETAIL
STEEL BEAM TO TUBE COLUMN CONNECTION

12 SCALE: N.T.S.

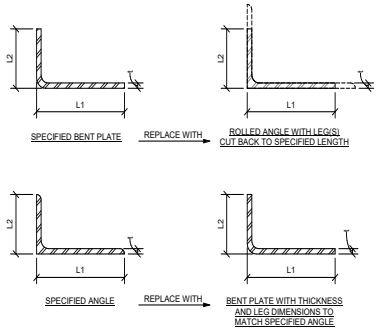

NOTE:
AT CONTRACTOR/FABRICATOR PREFERENCE ANGLE AND 90° BENT PLATES MAY BE SUBSTITUTED AS SHOWN U.N.O. BY EOR/ARCH.

TYPICAL DETAIL
ANGLE OR BENT PLATE SUBSTITUTION

9 SCALE: N.T.S.

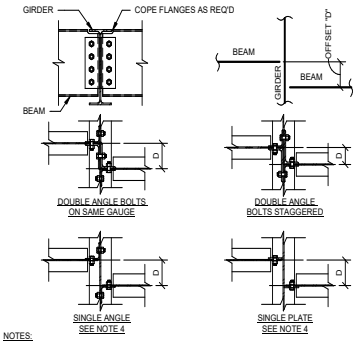

NOTES:
1. REFER TO GENERAL NOTES FOR BEAM REACTION DESIGN CRITERIA.
2. PROVIDE PRE-DESIGNED CONNECTIONS AS SHOWN IN AISC MANUAL WHERE APPLICABLE.
3. WELDED/BOLTED, WELDED/WELDED OR BOLTED/BOLTED CONNECTIONS PER AISC ARE PERMITTED.
4. SINGLE ANGLE AND SINGLE PLATE CONNECTIONS SHALL ONLY BE USED AT SUPPORTED BEAM ENDS. SEE 2/S401 FOR DEFINITION FOR SUPPORTED BEAM.
5. IN LIEU OF DETAILS SHOWN, STEEL DETAILER MAY SUGGEST ALTERNATE DETAILS FOR REVIEW AND APPROVAL.

TYPICAL DETAIL
CONNECTION AT OFFSET BEAMS

6 SCALE: N.T.S.

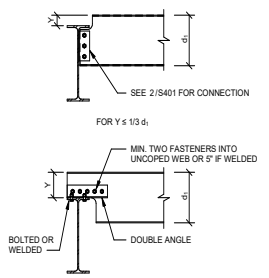

NOTES:
1. REFER TO GENERAL NOTES FOR BEAM REACTION DESIGN CRITERIA.
2. REFER TO GENERAL NOTES FOR BOLT TYPE.

TYPICAL DETAIL
CONNECTION TO RAISED BEAMS

3 SCALE: N.T.S.

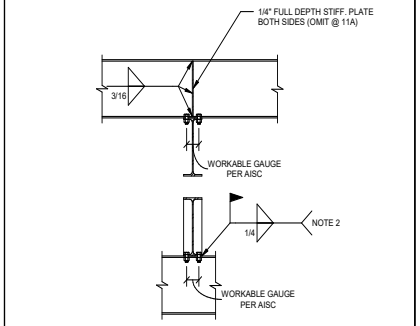

NOTES:
1. REFER TO GENERAL NOTES FOR BOLT TYPE.
2. IN LIEU OF BOLTS WELDS MAY BE USED.

TYPICAL DETAIL
BEAM OVER BEAM CONNECTION

11 SCALE: N.T.S.

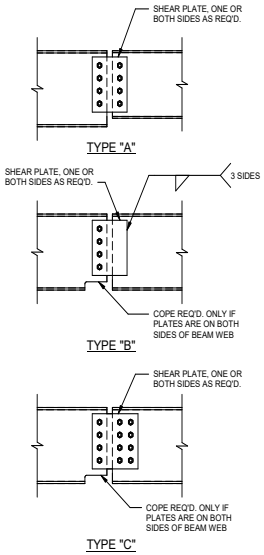

OPTION 1: PLATE TYPE SHEAR SPLICES

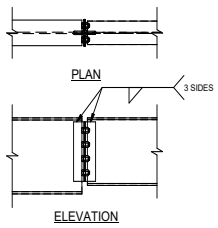

NOTES:
1. REFER TO GENERAL NOTES FOR BEAM REACTION DESIGN CRITERIA.
2. REFER TO GENERAL NOTES FOR BOLT TYPE.
3. ALL CONNECTIONS SHALL MEET THE ROTATIONAL DUCTILITY AND STABILITY REQUIREMENTS PROVIDED BY AISC.

OPTION 2: ANGLE TYPE SHEAR SPLICE

TYPICAL DETAIL
SHEAR SPLICE AT BEAM

7 SCALE: N.T.S.

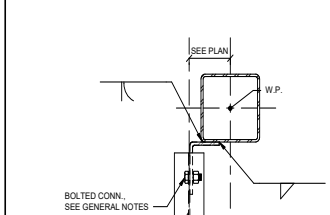

NOTES:
1. SINGLE BENT PLATES SHALL BE DESIGNED FOLLOWING PROCEDURES OUTLINED IN THE AISC MANUAL.
2. REFER TO GENERAL NOTES FOR CONNECTION DESIGN CRITERIA.

TYPICAL DETAIL
OFFSET BEAM TO COLUMN SHEAR CONNECTION

5 SCALE: N.T.S.

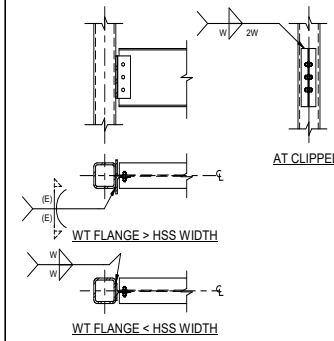

NOTES:
1. WELD SIZES W & E SHALL MEET AISC MIN. SIZE TO ENSURE ROTATIONAL DUCTILITY.
2. WT WEB THICKNESS SHALL NOT EXCEED 7/16".
3. THIS DETAIL MAY BE USED IN LIEU OF THE TYPICAL CONN. DETAIL AT CONTRACTOR PREFERENCE.
4. REFER TO GENERAL NOTES FOR BEAM REACTION DESIGN CRITERIA.
5. REFER TO GENERAL NOTES FOR BOLT TYPE.
6. EITHER WELDED/BOLTED OR WELDED/WELDED CONNECTIONS ARE ACCEPTABLE.

ALTERNATE DETAIL
STEEL BEAM TO TUBE COLUMN CONNECTION

4 SCALE: N.T.S.

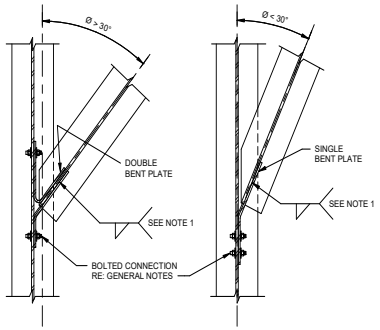

NOTE:
1. SHOP WELD CONNECTION TO DEVELOP BEAM REACTION. REFER TO GENERAL NOTES.

TYPICAL DETAIL
SKEWED BEAM TO BEAM SHEAR CONNECTION

10 SCALE: N.T.S.

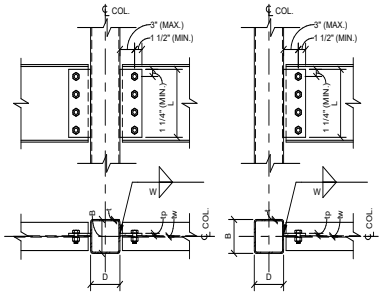

MAX. COLUMN WIDTH	
t	B OR D MAX.
3/16"	6"
1/4"	8"
5/16"	10"
3/8"	12"
1/2"	16"
5/8"	18"

MAX. DESIGN END REACTION Ru (KIPS)*						
L (IN.)	t = 3/16"	t = 1/4"	t = 5/16"	t = 3/8"	t = 1/2"	t = 5/8"
5.5	15	20	25	30	40	50
8.5	36	48	60	73	97	121
11.5	66	89	111	133	178	222
14.5	106	142	177	212	283	354
17.5	154	206	258	309	412	516
20.5	212	283	354	425	566	708
23.5	278	373	466	558	744	930
26.5	354	474	592	710	946	1183

* - VALUES SHOWN FOR ASTM A500 GR. B STEEL. FOR ASTM A500 GR. C, MULTIPLY VALUES BY 1.07.

NOTES:
1. REFER TO GENERAL NOTES FOR BEAM REACTION DESIGN CRITERIA, REACTIONS SHOWN ARE FACTORED LOADS (LRFD).
2. PROVIDE PRE-DESIGNED CONNECTIONS AS SHOWN IN AISC MANUAL WHERE APPLICABLE.
3. REFER TO GENERAL NOTES FOR BOLT TYPE.
4. THIS CONNECTION MAY ONLY BE USED WITH THE GEOMETRY SHOWN ABOVE AND WHERE THE BEAM DESIGN REACTION IS LESS THAN THE VALUE SHOWN IN THE SCHEDULE. ALL VALUES SHOWN ARE ULTIMATE DESIGN (LRFD) VALUES.
5. tp AND/OR tw SHALL BE LESS THAN OR EQUAL TO 1/4" AT 3/16" THICK HSS TUBES. AT THICKER TUBES tp AND/OR tw SHALL BE LESS THAN OR EQUAL TO 7/16" FOR CONNECTIONS WITH 2 TO 5 BOLTS, AND SHALL BE LESS THAN OR EQUAL TO 5/16" FOR CONNECTIONS WITH 6 OR MORE BOLTS.
6. COLUMN WIDTH B OR D SHALL BE LESS THAN OR EQUAL TO THE MAXIMUM WIDTH SHOWN IN THE SCHEDULE.
7. W SHALL BE 5/8 (tp).
8. FOR TWO SIDED CONNECTIONS, ALL CRITERIA MUST BE MET AT BOTH SIDES. WHERE ONLY ONE SIDE FAILS THE CRITERIA A WT CONNECTION MAY BE PROVIDED AT THAT SIDE.
9. THIS DETAIL IS NOT ALLOWED AT BRACED FRAMES OR OTHER AXIALLY LOADED CONNECTIONS.
10. SEE 6/S401 FOR THRU PLATE AND END BEARING CONNECTIONS OR SEE 4/S402 FOR WT CONNECTIONS WHERE THIS DETAIL DOES NOT APPLY.
11. PLATE DEPTH "L" SHALL NOT BE LESS THAN 1/2 THE "T" DIMENSION OF THE SUPPORTED BEAM.

TYPICAL DETAIL
SINGLE PLATE TO RECTANGULAR HSS WALL CONNECTION

1 SCALE: N.T.S.

PROFESSIONAL SEAL
Matrix Structural Engineers
TBPE Firm Registration No. F-2640
STATE OF TEXAS
JAYNDOLA. KHAYRATTEE
68260
LICENSED
PROFESSIONAL ENGINEER
01/14/2020

LOGO/CONTACT
MATRIX STRUCTURAL ENGINEERS
5177 Richmond Avenue, Suite 670
Houston, TX 77056-2401
Tel: 713.664.0133
Fax: 713.664.1370
MSE - 18135

DESIGN TEAM
Architectural
Martinez Architects
Civil Engineer
Maverick Engineering
Structural
Matrix Structural engineers
MEP
DBR
Landscaping
KDC Associates

FIRE STATION #11
CITY OF MIDLAND
Briarwood Ave & Golden Gate Dr
Midland, TX 79707

PROJECT No: **MA 18017**
DATE: **01/14/2020**

ISSUE
100% DESIGN DEVELOPMENT 22-MAY-2019
75% CONSTRUCTION DOCUMENT 26-JUN-2019
100% ISSUE FOR PERMIT 30-JUL-2019
100% ISSUE FOR APPROVAL TO BID 16-JAN-2020

FRAMING DETAILS

S402

4.1421

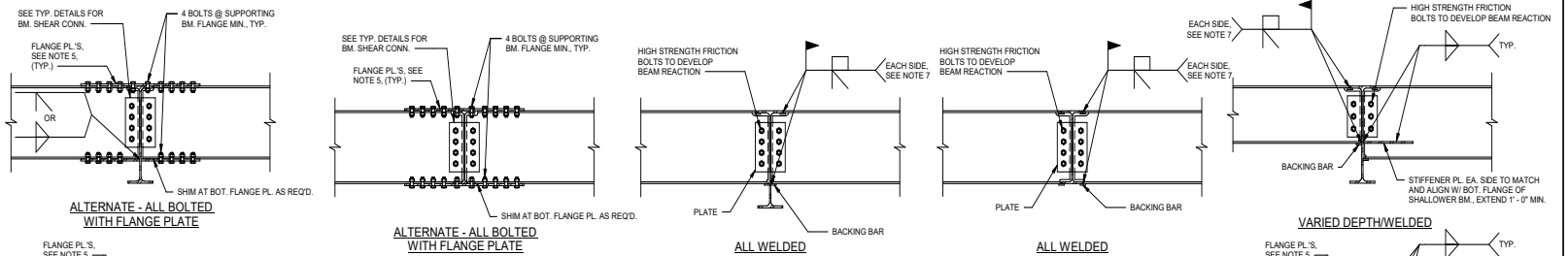

NOTES:
1. BOLTS IN WEB CONNECTION SHALL BE TIGHTENED PRIOR TO WELDING OF FLANGES.
2. ALL BOLTED MOMENT AND AXIAL CONNECTIONS SHALL USE SLIP CRITICAL BOLTS. ALLOWABLE STRENGTH OF BOLTS SHALL BE BASED ON A CLASS "A" FAYING SURFACE. DO NOT PAINT STEEL AT SLIP CRITICAL CONNECTIONS.
3. U.N.O. FLANGE PLATES, BOLTS, AND WELDS SHOWN SHALL BE DESIGNED FOR AN AXIAL TENSION/COMPRESSION EQUAL TO 90% OF THE BEAM PLASTIC MOMENT CAPACITY DIVIDED BY THE DISTANCE BETWEEN FLANGE CENTROIDS. T=C=0.90Mp/(D-tf), WHERE DESIGN MOMENTS ARE PROVIDED THEY MAY BE USED IN LIEU OF THE AFOREMENTIONED CRITERIA. T=C=Mu/(D-tf)
4. BOLTED MOMENT CONNECTIONS MAY BE USED IN LIEU OF A FULLY WELDED MOMENT CONNECTION AT CONTRACTOR PREFERENCE EXCEPT WHERE PROHIBITED IN NOTE 5.
5. BOLTED MOMENT CONNECTIONS MAY NOT BE USED AT ROOF BEAMS WHERE THE DECK IS DIRECTLY ATTACHED TO THE BEAM OR WHERE BOLTS WILL INTERFERE WITH JOIST SEATS OR OTHER BEARING CONNECTIONS.
6. BOLTS IN FLANGE SHALL BE SIZED SUCH THAT THE CROSS-SECTIONAL AREA OF THE FLANGE IS NOT REDUCED BY MORE THAN 30%, ANY VARIANCE MUST BE SUBMITTED TO E.O.R. FOR APPROVAL.
7. WHERE MOMENTS ARE PROVIDED PJP WELDS MAY BE USED IN LIEU OF CJP WELDS. SEE NOTE 3 FOR DEIGN CRITERIA.

TYPICAL DETAIL STEEL BEAM TO BEAM MOMENT CONNECTION

12 SCALE: N.T.S.

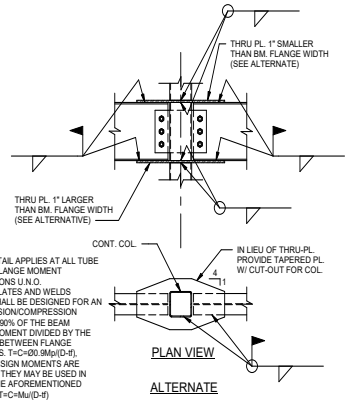

NOTES:
1. THIS DETAIL APPLIES AT ALL TUBE TO WIDE FLANGE MOMENT CONNECTIONS U.N.O.
2. U.N.O. PLATES AND WELDS SHOWN SHALL BE DESIGNED FOR AN AXIAL TENSION/COMPRESSION EQUAL TO 90% OF THE BEAM PLASTIC MOMENT DIVIDED BY THE DISTANCE BETWEEN FLANGE CENTROIDS. T=C=90.Mp/(D-tf), WHERE DESIGN MOMENTS ARE PROVIDED THEY MAY BE USED IN LIEU OF THE AFOREMENTIONED CRITERIA, T=C=Mu/(D-tf)

HIGH STRENGTH TUBE COLUMN TO WIDE FLANGE BEAM MOMENT CONNECTION

11 SCALE: N.T.S.

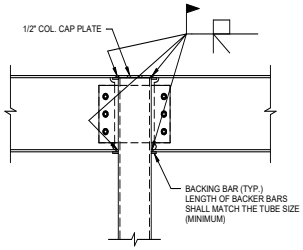

NOTES:
1. THIS DETAIL SHALL ONLY BE USED WHERE SPECIFICALLY NOTED. FOR GENERIC OR UNMARKED MOMENT CONNECTIONS, SEE 11/S403
2. BOLTS IN WEB CONNECTION SHALL BE TIGHTENED PRIOR TO WELDING OF FLANGES.

WIDE FLANGE BEAM TO TUBE COLUMN MOMENT CONNECTION

8 SCALE: N.T.S.

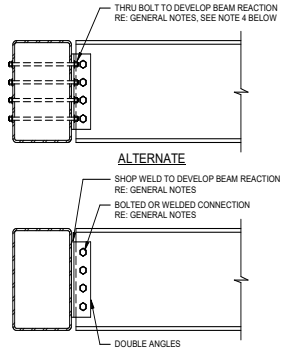

NOTES:
1. REFER TO GENERAL NOTES FOR BEAM REACTION DESIGN CRITERIA.
2. PROVIDE PRE-DESIGNED CONNECTIONS AS SHOWN IN AISC MANUAL PART 4 WHERE APPLICABLE.
3. REFER TO GENERAL NOTES FOR BOLT TYPE.
4. DO NOT PRETENSION THRU-BOLTS AT HSS TUBES, INSTALL BOLTS IN A SNUG-TIGHT CONDITION.

TYPICAL DETAIL WIDE FLANGE TO TUBE CONNECTION

5 SCALE: N.T.S.

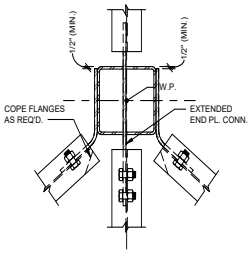

NOTES:
1. REFER TO GENERAL NOTES FOR BEAM REACTION DESIGN CRITERIA.
2. SINGLE BENT PLATES SHALL BE DESIGNED FOLLOWING PROCEDURES OUTLINED IN THE AISC MANUAL.

SKEWED STEEL BEAM TO COLUMN SHEAR CONNECTION

2 SCALE: N.T.S.

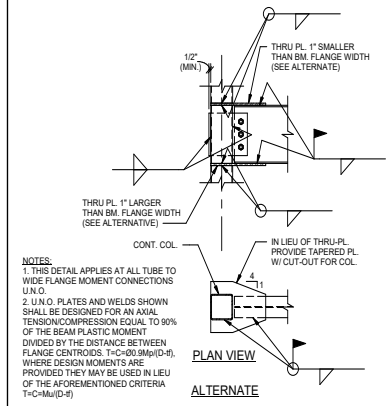

NOTES:
1. THIS DETAIL APPLIES AT ALL TUBE TO WIDE FLANGE MOMENT CONNECTIONS U.N.O.
2. U.N.O. PLATES AND WELDS SHOWN SHALL BE DESIGNED FOR AN AXIAL TENSION/COMPRESSION EQUAL TO 90% OF THE BEAM PLASTIC MOMENT DIVIDED BY THE DISTANCE BETWEEN FLANGE CENTROIDS. T=C=Ø0.9Mp/(D-tf), WHERE DESIGN MOMENTS ARE PROVIDED THEY MAY BE USED IN LIEU OF THE AFOREMENTIONED CRITERIA T=C=Mu/(D-tf)

HIGH STRENGTH TUBE COLUMN TO WIDE FLANGE BEAM MOMENT CONNECTION

10 SCALE: N.T.S.

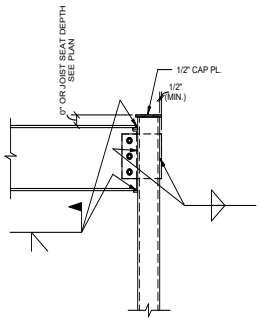

NOTES:
1. THIS DETAIL SHALL ONLY BE USED WHERE SPECIFICALLY NOTED. FOR GENERIC OR UNMARKED MOMENT CONNECTIONS, SEE
2. BOLTS IN WEB CONNECTION SHALL BE TIGHTENED PRIOR TO WELDING OF FLANGES.
3. THIS DETAIL MAY BE USED AT GRIDS M-1, M-3, H-1 & H-3.

TYPICAL DETAIL TUBE COLUMN TO WIDE FLANGE BEAM MOMENT CONNECTION

7 SCALE: N.T.S.

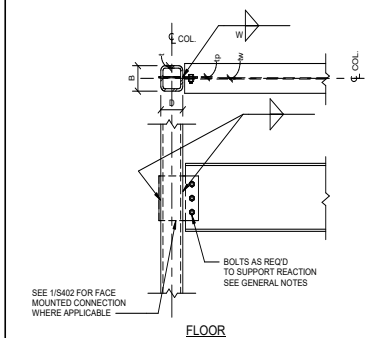

NOTES:
1. tp AND/OR tw SHALL BE LESS THAN OR EQUAL TO 1/4" AT 3/16" THICK HSS TUBES. AT THICKER TUBES tp AND/OR tw SHALL BE LESS THAN OR EQUAL TO 7/16" FOR CONNECTIONS WITH 2 TO 5 BOLTS, AND SHALL BE LESS THAN OR EQUAL TO 5/16" FOR CONNECTIONS WITH 6 OR MORE BOLTS.
2. PLATE DEPTH "L" SHALL NOT BE LESS THAN 1/2 THE "T" DIMENSION OF THE SUPPORTED BEAM.

TYPICAL DETAIL STEEL BEAM TO TUBE COLUMN CONNECTION AT FLOOR

4 SCALE: N.T.S.

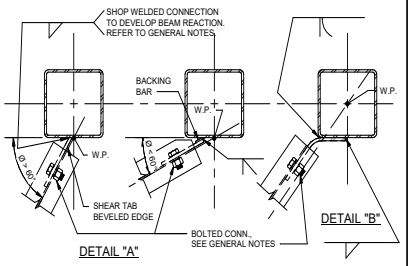

NOTES:
1. SHEAR TAB CONNECTION MAY BE USED ONLY WHERE WORK POINT IS AT FACE OF TUBE.
2. SINGLE BENT PLATES SHALL BE DESIGNED FOLLOWING PROCEDURES OUTLINED IN THE AISC MANUAL.
3. REFER TO GENERAL NOTES FOR CONNECTION DESIGN CRITERIA.
4. USE DETAIL "A" UNLESS CONDITIONS EXIST THAT REQUIRE WORK POINT TO BE LOCATED AT CENTERLINE OF TUBE SECTION (SPANDREL BEAM FOR EXAMPLE). LOCATION OF WORK POINTS SHALL BE APPROVED BY ENGINEER PRIOR TO SHOP DRAWING SUBMITTAL.
5. DETAIL "A" MAY BE USED WHERE THE BEAM DESIGN REACTION MEETS THE REQUIREMENTS SHOWN IN 1/S402.

TYPICAL DETAIL SKEWED STEEL BEAM TO COLUMN SHEAR CONNECTION

1 SCALE: N.T.S.

4.1422

PROFESSIONAL SEAL
Matrix Structural Engineers
TBPE Firm Registration No. F-2640
STATE OF TEXAS
JAYNDOL A. KHAYRATTEE
68260
LICENSED
PROFESSIONAL ENGINEER
01/14/2020

LOGO/CONTACT
MATRIX STRUCTURAL ENGINEERS
5177 Richmond Avenue, Suite 670
Houston, TX 77046-2401
Tel: 713.664.0133
Fax: 713.664.1370
MSE - 18135

DESIGN TEAM
Architectural
Martinez Architects
Civil Engineer
Maverick Engineering
Structural
Matrix Structural engineers
MEP
DBR
Landscaping
KDC Associates

FIRE STATION #11
CITY OF MIDLAND
Briarwood Ave & Golden Gate Dr
Midland, TX 79707

PROJECT No: **MA 18017**
DATE: **01/14/2020**

ISSUE
100% DESIGN DEVELOPMENT 22-MAY-2019
75% CONSTRUCTION DOCUMENT 26-JUN-2019
100% ISSUE FOR PERMIT 30-JUL-2019
100% ISSUE FOR APPROVAL TO BID 16-JAN-2020

FRAMING DETAILS

S403

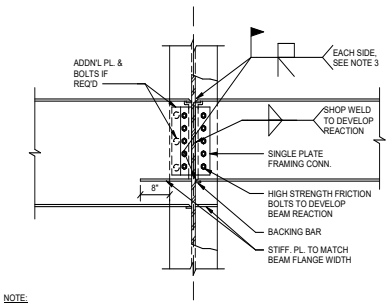

NOTE:
1. BOLTS IN WEB CONNECTION SHALL BE TIGHTENED PRIOR TO WELDING OF FLANGES.
2. U.N.O. FLANGE PLATES, BOLTS, AND WELDS SHOWN SHALL BE DESIGNED FOR AN AXIAL TENSION/COMPRESSION EQUAL TO 90% OF THE BEAM PLASTIC MOMENT CAPACITY DIVIDED BY THE DISTANCE BETWEEN FLANGE CENTROIDS. T=C=0.90Mp/(D-tf), WHERE DESIGN MOMENTS ARE PROVIDED THEY MAY BE USED IN LIEU OF THE AFOREMENTIONED CRITERIA. T=C=Mu/(D-tf)
3. WHERE MOMENTS ARE PROVIDED PJP WELDS MAY BE USED IN LIEU OF CJP WELDS. SEE NOTE 3 FOR DEIGN CRITERIA.

TYPICAL DETAIL
DOUBLE STEEL BEAM TO COLUMN WEB CONNECTION

9 SCALE: N.T.S.

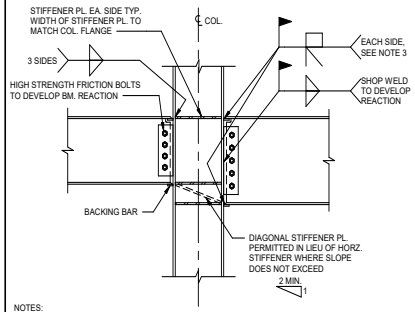

NOTES:
1. BOLTS IN WEB CONNECTION SHALL BE TIGHTENED PRIOR TO WELDING OF FLANGES.
2. U.N.O. FLANGE PLATES, BOLTS, AND WELDS SHOWN SHALL BE DESIGNED FOR AN AXIAL TENSION/COMPRESSION EQUAL TO 90% OF THE BEAM PLASTIC MOMENT CAPACITY DIVIDED BY THE DISTANCE BETWEEN FLANGE CENTROIDS. T=C=0.90Mp/(D-tf), WHERE DESIGN MOMENTS ARE PROVIDED THEY MAY BE USED IN LIEU OF THE AFOREMENTIONED CRITERIA. T=C=Mu/(D-tf)
3. WHERE MOMENTS ARE PROVIDED PJP WELDS MAY BE USED IN LIEU OF CJP WELDS. SEE NOTE 3 FOR DEIGN CRITERIA.

TYPICAL DETAIL
BEAM TO COLUMN FLANGE MOMENT CONNECTION - WELDED

6 SCALE: N.T.S.

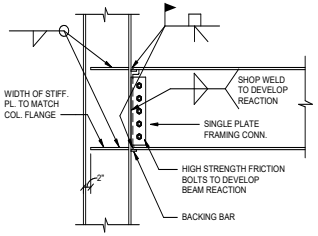

NOTE:
1. BOLTS IN WEB CONNECTION SHALL BE TIGHTENED PRIOR TO WELDING OF FLANGES.
2. U.N.O. FLANGE PLATES, BOLTS, AND WELDS SHOWN SHALL BE DESIGNED FOR AN AXIAL TENSION/COMPRESSION EQUAL TO 90% OF THE BEAM PLASTIC MOMENT CAPACITY DIVIDED BY THE DISTANCE BETWEEN FLANGE CENTROIDS. T=C=0.90Mp/(D-tf), WHERE DESIGN MOMENTS ARE PROVIDED THEY MAY BE USED IN LIEU OF THE AFOREMENTIONED CRITERIA. T=C=Mu/(D-tf)
3. WHERE MOMENTS ARE PROVIDED PJP WELDS MAY BE USED IN LIEU OF CJP WELDS. SEE NOTE 3 FOR DEIGN CRITERIA.

TYPICAL DETAIL
STEEL BEAM TO WIDE FLANGE COLUMN FLANGE MOMENT CONNECTION

3 SCALE: N.T.S.

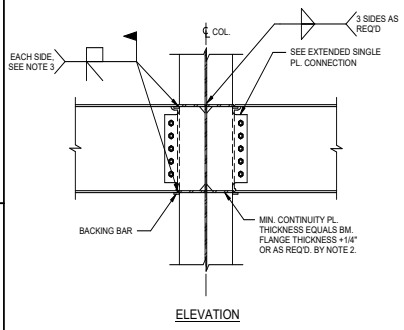

ELEVATION

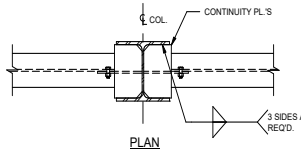

PLAN

NOTES:
1. BOLTS IN WEB CONNECTION SHALL BE TIGHTENED PRIOR TO WELDING OF FLANGES.
2. U.N.O. FLANGE PLATES, AND WELDS SHOWN SHALL BE DESIGNED FOR AN AXIAL TENSION/COMPRESSION EQUAL TO 90% OF THE BEAM PLASTIC MOMENT CAPACITY DIVIDED BY THE DISTANCE BETWEEN FLANGE CENTROIDS. T=C=0.90Mp/(D-tf), WHERE DESIGN MOMENTS ARE PROVIDED THEY MAY BE USED IN LIEU OF THE AFOREMENTIONED CRITERIA. T=C=Mu/(D-tf)
3. WHERE MOMENTS ARE PROVIDED PJP WELDS MAY BE USED IN LIEU OF CJP WELDS. SEE NOTE 3 FOR DEIGN CRITERIA.

ALTERNATE DETAIL
BEAM TO COLUMN WEB CONNECTION - WELDED

7 SCALE: N.T.S.

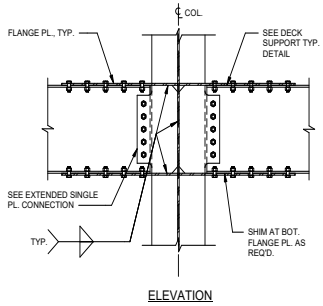

ELEVATION

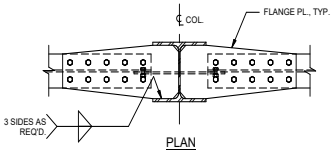

PLAN

NOTES:
1. ALL BOLTED MOMENT AND AXIAL CONNECTIONS SHALL USE SLIP CRITICAL BOLTS. ALLOWABLE STRENGTH OF BOLTS SHALL BE BASED ON A CLASS "A" FAYING SURFACE. DO NOT PAINT STEEL AT SLIP CRITICAL CONNECTIONS.
2. U.N.O. FLANGE PLATES, BOLTS, AND WELDS SHOWN SHALL BE DESIGNED FOR AN AXIAL TENSION/COMPRESSION EQUAL TO 90% OF THE BEAM PLASTIC MOMENT CAPACITY DIVIDED BY THE DISTANCE BETWEEN FLANGE CENTROIDS. T=C=0.90Mp/(D-tf), WHERE DESIGN MOMENTS ARE PROVIDED THEY MAY BE USED IN LIEU OF THE AFOREMENTIONED CRITERIA. T=C=Mu/(D-tf)
3. THIS DETAIL MAY BE USED IN LIEU OF A FULLY WELDED MOMENT CONNECTION AT CONTRACTOR PREFERENCE EXCEPT WHERE PROHIBITED IN NOTE 4.
4. THIS DETAIL MAY NOT BE USED AT ROOF BEAMS WHERE THE DECK IS DIRECTLY ATTACHED TO THE BEAM OR WHERE BOLTS WILL INTERFERE WITH JOIST SEATS OR OTHER BEARING CONNECTIONS.
5. BOLTS IN FLANGE SHALL BE SIZED SUCH THAT THE CROSS-SECTIONAL AREA OF THE FLANGE IS NOT REDUCED BY MORE THAN 30%, ANY VARIANCE MUST BE SUBMITTED TO E.O.R. FOR APPROVAL.

ALTERNATE DETAIL
BEAM TO COLUMN WEB CONNECTION - BOLTED

4 SCALE: N.T.S.

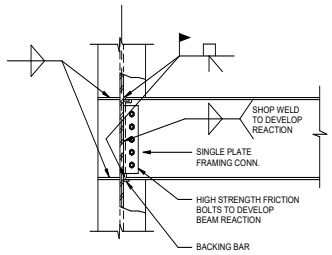

NOTE:
1. BOLTS IN WEB CONNECTION SHALL BE TIGHTENED PRIOR TO WELDING OF FLANGES.
2. U.N.O. FLANGE PLATES, BOLTS, AND WELDS SHOWN SHALL BE DESIGNED FOR AN AXIAL TENSION/COMPRESSION EQUAL TO 90% OF THE BEAM PLASTIC MOMENT CAPACITY DIVIDED BY THE DISTANCE BETWEEN FLANGE CENTROIDS. T=C=0.90Mp/(D-tf), WHERE DESIGN MOMENTS ARE PROVIDED THEY MAY BE USED IN LIEU OF THE AFOREMENTIONED CRITERIA. T=C=Mu/(D-tf)
3. WHERE MOMENTS ARE PROVIDED PJP WELDS MAY BE USED IN LIEU OF CJP WELDS. SEE NOTE 3 FOR DEIGN CRITERIA.

TYPICAL DETAIL
STEEL BEAM TO WIDE FLANGE COLUMN WEB MOMENT CONNECTION

2 SCALE: N.T.S.

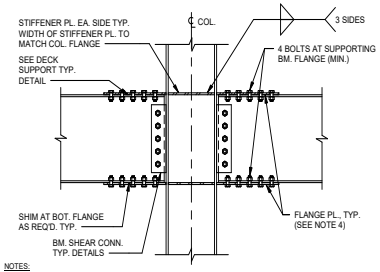

NOTES:
1. ALL BOLTED MOMENT AND AXIAL CONNECTIONS SHALL USE SLIP CRITICAL BOLTS. ALLOWABLE STRENGTH OF BOLTS SHALL BE BASED ON A CLASS "A" FAYING SURFACE. DO NOT PAINT STEEL AT SLIP CRITICAL CONNECTIONS.
2. U.N.O. FLANGE PLATES, BOLTS, AND WELDS SHOWN SHALL BE DESIGNED FOR AN AXIAL TENSION/COMPRESSION EQUAL TO 90% OF THE BEAM PLASTIC MOMENT CAPACITY DIVIDED BY THE DISTANCE BETWEEN FLANGE CENTROIDS. T=C=0.90Mp/(D-tf), WHERE DESIGN MOMENTS ARE PROVIDED THEY MAY BE USED IN LIEU OF THE AFOREMENTIONED CRITERIA. T=C=Mu/(D-tf)
3. THIS DETAIL MAY BE USED IN LIEU OF A FULLY WELDED MOMENT CONNECTION AT CONTRACTOR PREFERENCE EXCEPT WHERE PROHIBITED IN NOTE 4.
4. THIS DETAIL MAY NOT BE USED AT ROOF BEAMS WHERE THE DECK IS DIRECTLY ATTACHED TO THE BEAM OR WHERE BOLTS WILL INTERFERE WITH JOIST SEATS OR OTHER BEARING CONNECTIONS.
5. BOLTS IN FLANGE SHALL BE SIZED SUCH THAT THE CROSS-SECTIONAL AREA OF THE FLANGE IS NOT REDUCED BY MORE THAN 30%, ANY VARIANCE MUST BE SUBMITTED TO E.O.R. FOR APPROVAL.

ALTERNATE DETAIL
BEAM TO COLUMN FLANGE MOMENT CONNECTION - BOLTED

1 SCALE: N.T.S.

4.1423

PROFESSIONAL SEAL

Matrix Structural Engineers
TBPE Firm Registration No. F-2640

STATE OF TEXAS
JAYNOOL A. KHAYRATTEE
68260
LICENSED PROFESSIONAL ENGINEER

01/14/2020

LOGO/CONTACT

MATRIX STRUCTURAL ENGINEERS

5177 Richmond Avenue, Suite 670
Houston, TX 77046-2401
Tel: 713.664.0133
Fax: 713.664.1370
MSE - 18135

DESIGN TEAM

Architectural
Martinez Architects

Civil Engineer
Maverick Engineering

Structural
Matrix Structural engineers

MEP
DBR

Landscaping
KDC Associates

FIRE STATION #11

CITY OF MIDLAND
Briarwood Ave & Golden Gate Dr
Midland, TX 79707

PROJECT No: **MA 18017**
DATE: **01/14/2020**

ISSUE

100% DESIGN DEVELOPMENT
22-MAY-2019

75% CONSTRUCTION DOCUMENT
26-JUN-2019

100% ISSUE FOR PERMIT
30-JUL-2019

100% ISSUE FOR APPROVAL TO BID
16-JAN-2020

FRAMING DETAILS

S404

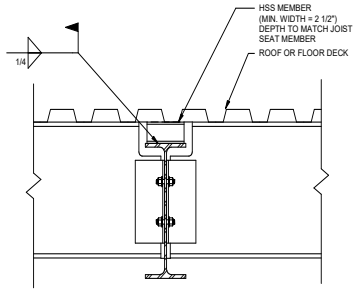

NOTE:
AT LOCATIONS WITH A JOIST ON ONE SIDE AND A BEAM ON THE OTHER SIDE, PROVIDE FILLER HSS SECTION ON HALF THE FLANGE. ALTERNATIVELY, THE TOP CHORD OF THE JOIST CAN BE EXTENDED TO THE EDGE OF THE MAIN BEAM FLANGE.

TYPICAL DETAIL
FILLER MEMBER FOR DECK AND SUPPORT
AT SECONDARY BEAMS PARALLEL TO JOISTS

12 SCALE: N.T.S.

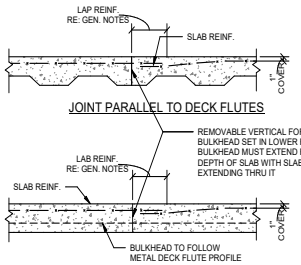

NOTES:
1. CONSTRUCTION JOINTS PARALLEL TO DECK FLUTES SHALL BE LOCATED NO CLOSER THAN 5' - 0" FROM THE CENTERLINE OF THE NEAREST GIRDER.
2. CONSTRUCTION JOINTS PERPENDICULAR TO DECK FLUTES SHALL BE LOCATED AT THE CENTER OF THE METAL DECK SPAN.

TYPICAL DETAIL
CONSTRUCTION JOINT
CONCRETE SLAB ON METAL DECK

9 SCALE: N.T.S.

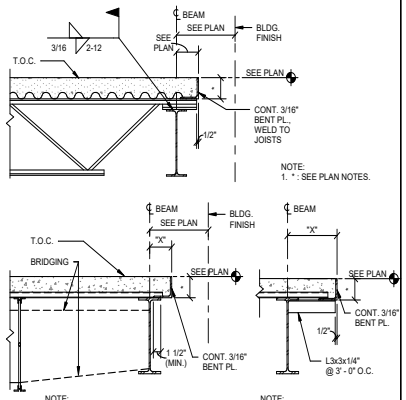

TYPICAL DETAIL
FLOOR EDGE AT EXTERIOR

6 SCALE: N.T.S.

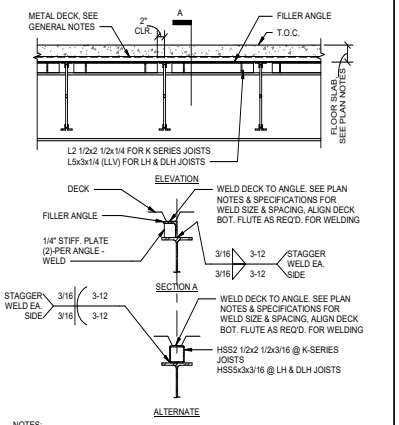

NOTES:
1. PROVIDE FILLER ANGLES AT BEAMS WITH DIAGONAL BRACES OR MOMENT CONNECTIONS.
2. INCREASE SIZE OR PROVIDE BENT PLATES TO FILL GAP WHERE REQUIRED TO MATCH JOIST SEATS.

TYPICAL DETAIL
OPEN WEB STEEL JOIST DECK DIAPHRAGM
CONNECTION TO STEEL BEAM

3 SCALE: N.T.S.

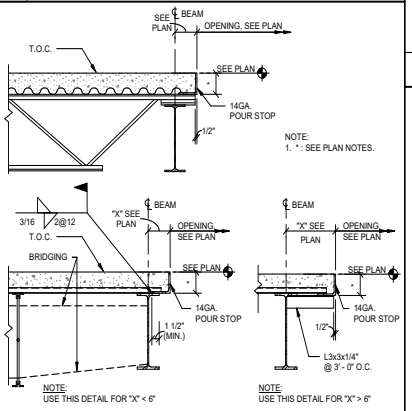

TYPICAL DETAIL
FLOOR EDGE AT OPENING - INTERIOR

5 SCALE: N.T.S.

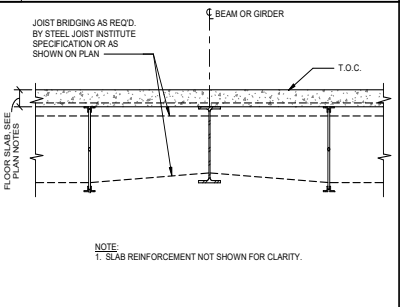

NOTE:
1. SLAB REINFORCEMENT NOT SHOWN FOR CLARITY.

TYPICAL DETAIL
OPEN WEB STEEL JOIST
AT INTERIOR TIE BEAM, FLOOR

2 SCALE: N.T.S.

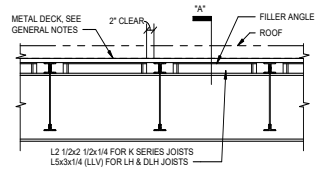

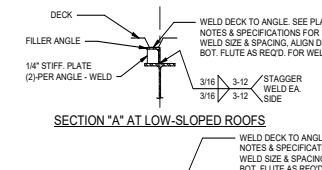

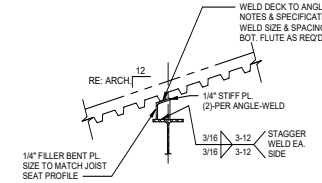

NOTE:
1. PROVIDE FILLER ANGLES AT BEAMS WITH DIAGONAL BRACES OR MOMENT CONNECTIONS.
2. INCREASE SIZE OR PROVIDE BENT PLATES TO FILL GAP WHERE REQUIRED TO MATCH JOIST SEATS.

TYPICAL DETAIL
OPEN WEB STEEL JOIST DECK DIAPHRAGM
CONNECTION TO STEEL BEAM

7 SCALE: N.T.S.

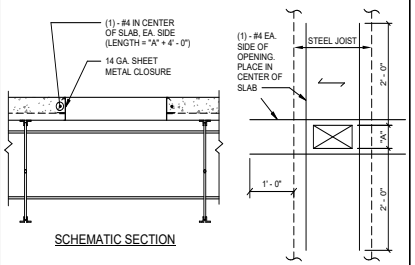

NOTES:
1. SLAB REINFORCEMENT NOT SHOWN FOR CLARITY.
2. COORDINATE OPENING SIZE AND LOCATIONS WITH ARCHITECTURAL AND MECHANICAL DRAWINGS.
3. MAXIMUM DIMENSION "A" (PERPENDICULAR TO DECK SPAN) SHALL BE 2' - 2". FOR "A" DIMENSION GREATER THAN 2' - 2", OPENING SHALL BE REFERRED TO ENGINEER FOR FRAMING.
4. FIELD CUT OPENING IN METAL DECK AFTER CONCRETE SLAB HAS ATTAINED A MINIMUM OF 75% OF ITS SPECIFIED 28-DAY COMPRESSIVE STRENGTH.
5. WWF SLAB REINFORCEMENT SHALL BE CUT AROUND OPENING. WWF SHALL EXTEND TO WITHIN 2" OF OPENING ON ALL SIDES.
6. OPENINGS 10" AND SMALLER DO NOT REQUIRE ADDITIONAL REINFORCEMENT.
7. PROVIDE REINFORCEMENT AS SHOWN FOR SQUARE, RECTANGULAR AND ROUND OPENINGS.

TYPICAL DETAIL
FLOOR OPENING -
STEEL BAR JOIST CONSTRUCTION

4 SCALE: N.T.S.

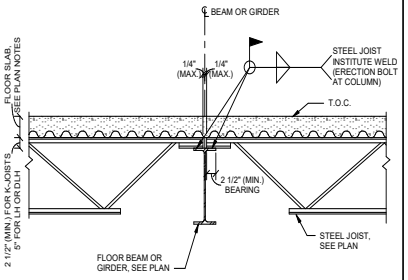

NOTES:
1. SLAB REINFORCEMENT NOT SHOWN FOR CLARITY.
2. WHEN WIDTH OF BEAM IS LESS THAN 5 1/2", OFFSET THE LOCATION OF JOISTS ON ONE SIDE OF BEAM.

TYPICAL DETAIL
OPEN WEB STEEL JOIST
AT INTERIOR STEEL BEAM, FLOOR

1 SCALE: N.T.S.

4.1424

PROFESSIONAL SEAL
Matrix Structural Engineers
TBPE Firm Registration No. F-2640
STATE OF TEXAS
JAYNOOL A. KHATRIWALA
65260
LICENSED
PROFESSIONAL ENGINEER
01/14/2020

LOGO/CONTACT
MATRIX
STRUCTURAL
ENGINEERS
5177 Richmond Avenue, Suite 670
Houston, TX 77056-2401
Tel: 713.664.0133
Fax: 713.664.1370
MSE - 18135

DESIGN TEAM
Architectural
Martinez Architects
Civil Engineer
Maverick Engineering
Structural
Matrix Structural engineers
MEP
DBR
Landscaping
KDC Associates

FIRE STATION #11
CITY OF MIDLAND
Briarwood Ave & Golden Gate Dr
Midland, TX 79707

PROJECT No: **MA 18017**
DATE: **01/14/2020**

ISSUE
100% DESIGN DEVELOPMENT
22-MAY-2019
75% CONSTRUCTION DOCUMENT
26-JUN-2019
100% ISSUE FOR PERMIT
30-JUL-2019
100% ISSUE FOR APPROVAL TO BID
16-JAN-2020

FLOOR FRAMING
DETAILS

S501

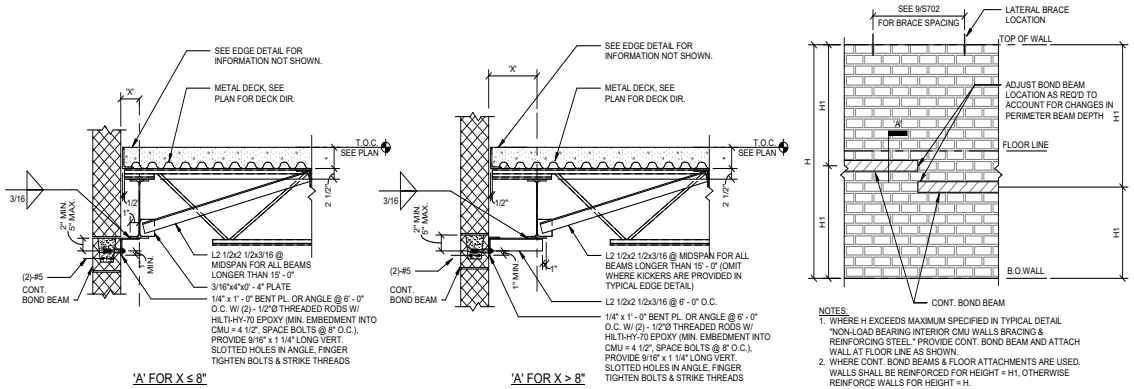

TYPICAL DETAIL
TALL INTERIOR NON-LOAD BEARING CMU WALL BRACING AT FLOOR LINE

12 SCALE: N.T.S.

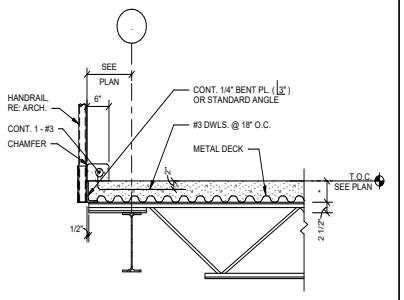

TYPICAL DETAIL
AT HANDRAIL

3 SCALE: 3/4" = 1'-0"

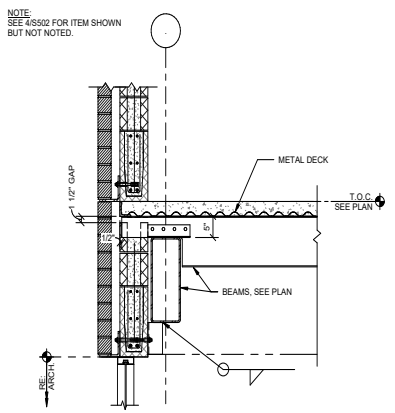

EXTERIOR DETAIL AT MEZZANINE

11 SCALE: 3/4" = 1'-0"

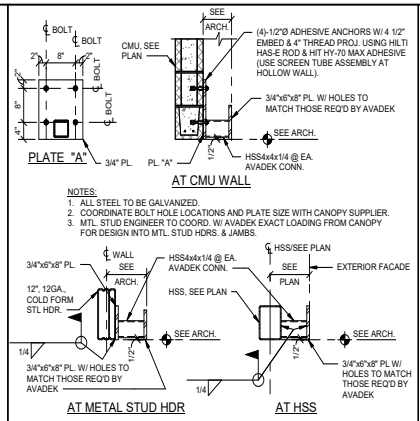

DETAIL AT AVADEK CANOPY CONNECTION

8 SCALE: N.T.S.

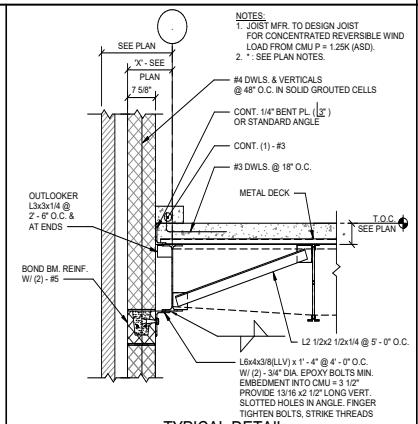

TYPICAL DETAIL
MASONRY SUPPORT - EXTERIOR

5 SCALE: 3/4" = 1'-0"

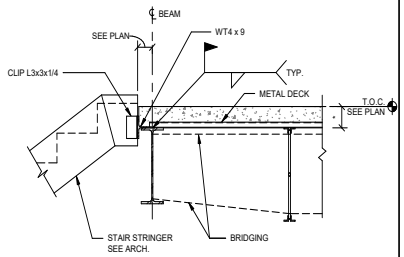

TYPICAL DETAIL
STAIR STRINGER CONNECTION
AT JOIST PARALLEL TO EDGE

2 SCALE: 3/4" = 1'-0"

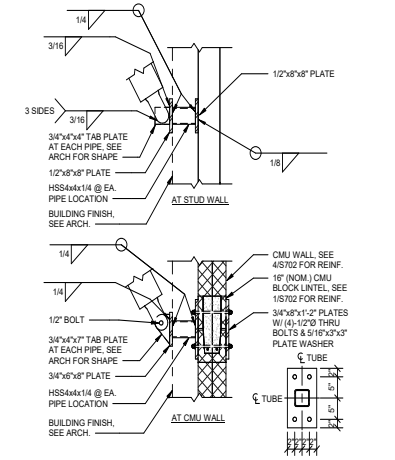

KICKER TO CMU/STUD CONNECTION DETAIL

10 SCALE: 3/4" = 1'-0"

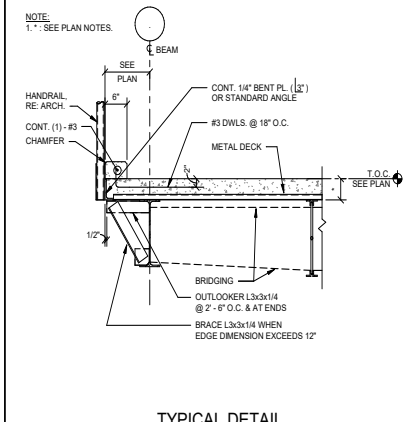

TYPICAL DETAIL
AT HANDRAIL

7 SCALE: 3/4" = 1'-0"

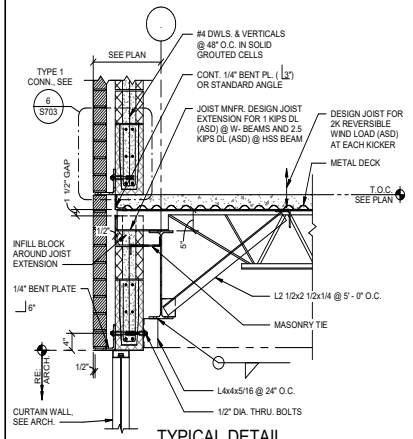

TYPICAL DETAIL
MASONRY SUPPORT - EXTERIOR

4 SCALE: 3/4" = 1'-0"

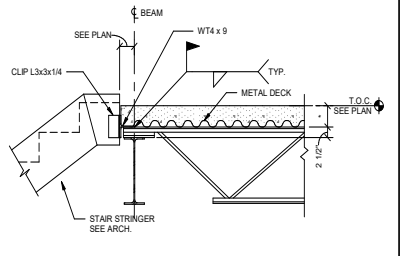

TYPICAL DETAIL
STAIR STRINGER CONNECTION
AT JOIST PERPENDICULAR TO EDGE

1 SCALE: 3/4" = 1'-0"

PROFESSIONAL SEAL
Matrix Structural Engineers
TBPE Firm Registration No. F-2640
STATE OF TEXAS
JAYNDOL A. KHAYMITTEE
68260
LICENSED PROFESSIONAL ENGINEER
01/14/2020

LOGO/CONTACT
MATRIX STRUCTURAL ENGINEERS
5177 Richmond Avenue, Suite 670
Houston, TX 77046-2401
Tel: 713.664.0133
Fax: 713.664.1370
MSE - 18135

DESIGN TEAM
Architectural
Martinez Architects
Civil Engineer
Maverick Engineering
Structural
Matrix Structural engineers
MEP
DBR
Landscaping
KDC Associates

FIRE STATION #11
CITY OF MIDLAND
Briarwood Ave & Golden Gate Dr
Midland, TX 79707

PROJECT No: **MA 18017**
DATE: **01/14/2020**

ISSUE
100% DESIGN DEVELOPMENT 22-MAY-2019
75% CONSTRUCTION DOCUMENT 26-JUN-2019
100% ISSUE FOR PERMIT 30-JUL-2019
100% ISSUE FOR APPROVAL TO BID 16-JAN-2020

FLOOR FRAMING DETAILS

S502

4.1425

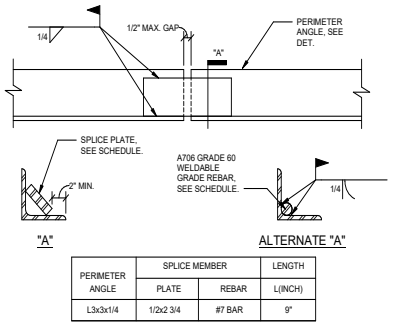

PERIMETER ANGLE	SPLICE MEMBER		LENGTH
	PLATE	REBAR	L(INCH)
L3x3x1/4	1/2x2 3/4	#7 BAR	9"

TYPICAL DETAIL
SPLICE AT PERIMETER ROOF ANGLE

12 SCALE: N.T.S.

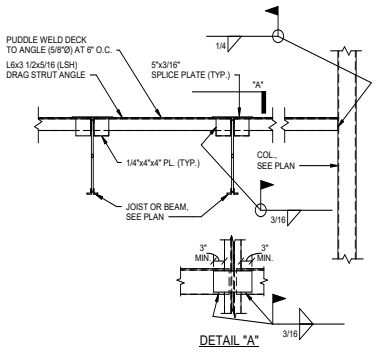

TYPICAL DETAIL
DRAG STRUT AT COLUMN

9 SCALE:N.T.S.

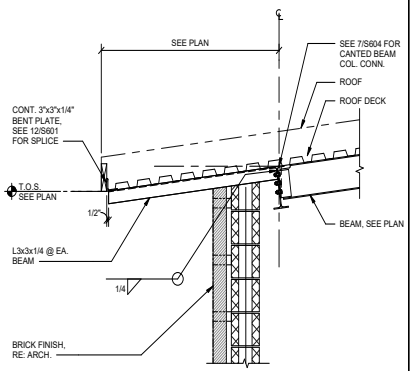

ROOF FRAMING DETAIL

6 SCALE: 3/4" = 1'-0"

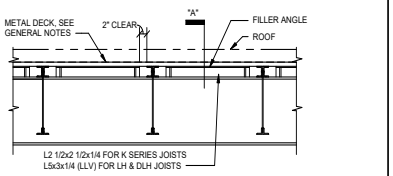

ELEVATION

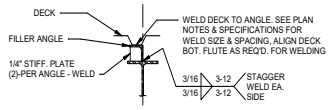

SECTION "A" AT LOW-SLOPED ROOFS

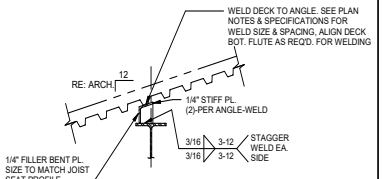

SECTION "A" AT STEEP-SLOPED ROOFS

NOTE:
1. PROVIDE FILLER ANGLES AT BEAMS WITH DIAGONAL BRACES OR MOMENT CONNECTIONS.
2. INCREASE SIZE OR PROVIDE BENT PLATES TO FILL GAP WHERE REQUIRED TO MATCH JOIST SEATS.

TYPICAL DETAIL
OPEN WEB STEEL JOIST DECK DIAPHRAGM
CONNECTION TO STEEL BEAM

2 SCALE: N.T.S.

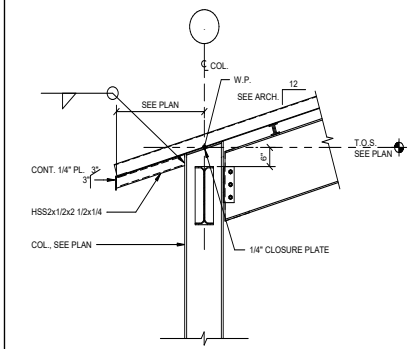

TYPICAL DETAIL
ROOF EDGE AT COLUMN
WITH W-BEAM PERPENDICULAR

11 SCALE: N.T.S.

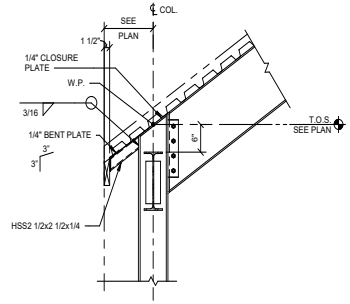

TYPICAL DETAIL
ROOF EDGE AT COLUMN
WITH W-BEAM PERPENDICULAR

8 SCALE: N.T.S.

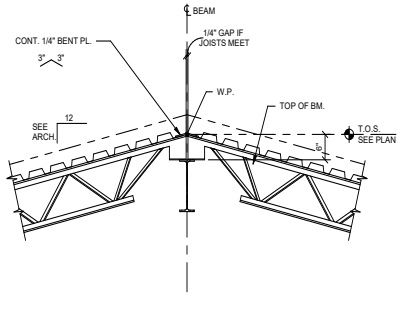

TYPICAL DETAIL
AT RIDGE

5 SCALE: N.T.S.

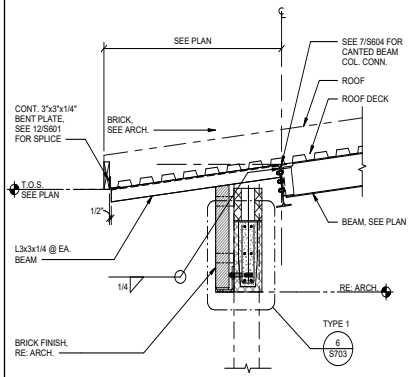

ROOF FRAMING DETAIL

10 SCALE: 3/4" = 1'-0"

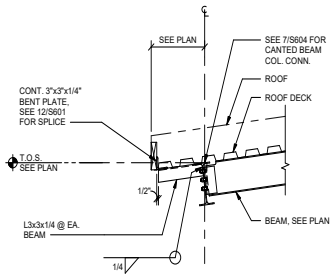

ROOF FRAMING DETAIL

7 SCALE: 3/4" = 1'-0"

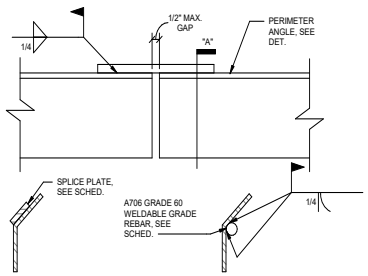

PERIMETER PLATE	SPLICE MEMBER		LENGTH
	PLATE	REBAR	L (INCH)
L3x3x1/4 BENT PL.	1/2x2 3/4	#7 BAR	9"

TYPICAL DETAIL
SPLICE AT PERIMETER ROOF PLATE

4 SCALE: N.T.S.

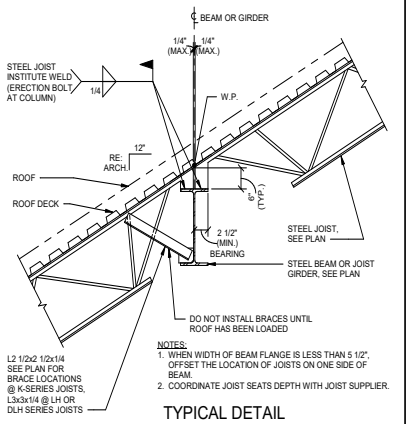

NOTES:
1. WHEN WIDTH OF BEAM FLANGE IS LESS THAN 5 1/2", OFFSET THE LOCATION OF JOISTS ON ONE SIDE OF BEAM.
2. COORDINATE JOIST SEATS DEPTH WITH JOIST SUPPLIER.

TYPICAL DETAIL
OPEN WEB STEEL JOIST
AT INTERIOR STEEL BEAM, SLOPED ROOF

1 SCALE: N.T.S.

4.1426

PROFESSIONAL SEAL

Matrix Structural Engineers
TBPE Firm Registration No. F-2640

01/14/2020

LOGO/CONTACT

MATRIX STRUCTURAL ENGINEERS

5177 Richmond Avenue, Suite 670
Houston, TX 77046-2401
Tel: 713.664.0130
Fax: 713.664.1370
MSE - 18135

DESIGN TEAM

Architectural
Martinez Architects

Civil Engineer
Maverick Engineering

Structural
Matrix Structural engineers

MEP
DBR

Landscaping
KDC Associates

FIRE STATION #11

CITY OF MIDLAND
Briarwood Ave & Golden Gate Dr
Midland, TX 79707

PROJECT No: **MA 18017**
DATE: **01/14/2020**

ISSUE

100% DESIGN DEVELOPMENT
22-MAY-2019

75% CONSTRUCTION DOCUMENT
26-JUN-2019

100% ISSUE FOR PERMIT
30-JUL-2019

100% ISSUE FOR APPROVAL TO BID
16-JAN-2020

ROOF FRAMING DETAILS

S601

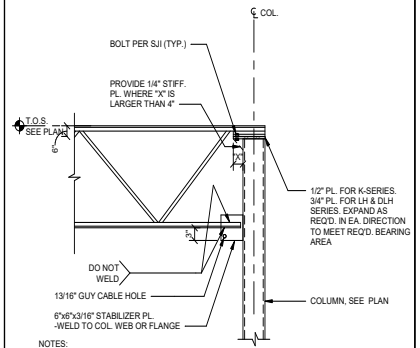

NOTES:
1. COORDINATE JOIST SEAT DEPTHS WITH JOIST SUPPLIER.
2. PER OSHA STANDARDS WHERE STEEL JOISTS ARE USED & COLUMNS ARE NOT FRAMED IN AT LEAST TWO DIRECTIONS WITH SOLID WEB STRUCTURAL STEEL MEMBERS, STEEL JOIST SHALL BE FIELD BOLTED TO COLUMN.
3. DIMENSION "X" SHALL BE DETERMINED BY JOIST MANUFACTURER.

TYPICAL DETAIL
JOIST SEAT AT TUBE COLUMN

12 SCALE: N.T.S.

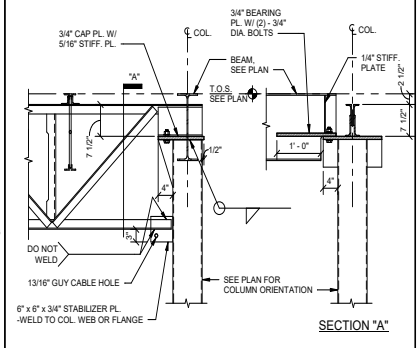

SECTION "A"

NOTE:
1. COORDINATE JOIST GIRDER SEAT DEPTHS WITH JOIST SUPPLIER.

TYPICAL DETAIL
SUPPORT OF JOIST GIRDERS OVER COLUMN AT ENDS

9 SCALE: N.T.S.

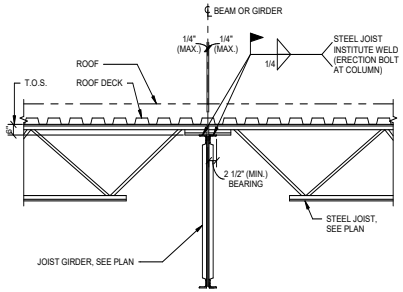

NOTES:
1. MINIMUM WIDTH OF TOP CHORD SHALL BE 6".
2. COORDINATE JOIST AND JOIST GIRDER SEAT DEPTHS WITH JOIST SUPPLIER.

TYPICAL DETAIL
OPEN WEB STEEL JOIST
AT INTERIOR JOIST GIRDER, ROOF

5 SCALE: N.T.S.

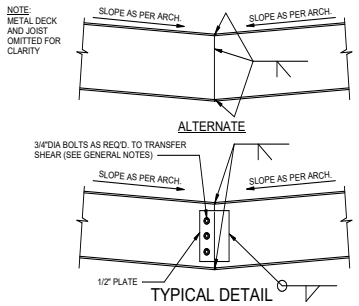

TYPICAL DETAIL
BROKEN BACK BEAM (MOMENT CONNECTION)

3 SCALE: N.T.S.

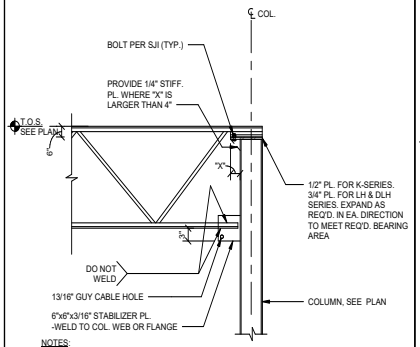

NOTES:
1. COORDINATE JOIST SEAT DEPTHS WITH JOIST SUPPLIER.
2. PER OSHA STANDARDS WHERE STEEL JOISTS ARE USED & COLUMNS ARE NOT FRAMED IN AT LEAST TWO DIRECTIONS WITH SOLID WEB STRUCTURAL STEEL MEMBERS, STEEL JOIST SHALL BE FIELD BOLTED TO COLUMN.
3. DIMENSION "X" SHALL BE DETERMINED BY JOIST MANUFACTURER.

TYPICAL DETAIL
JOIST SEAT AT WF COLUMN

11 SCALE: N.T.S.

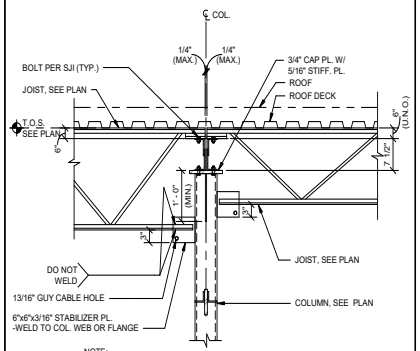

NOTE:
1. COORDINATE JOIST GIRDER SEAT DEPTHS WITH JOIST SUPPLIER.

TYPICAL DETAIL
SUPPORT OF JOIST GIRDER OVER COLUMNS, ROOF

6 SCALE: N.T.S.

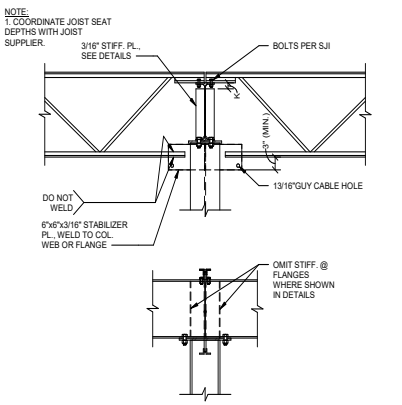

JOISTS DEEPER THAN BEAM

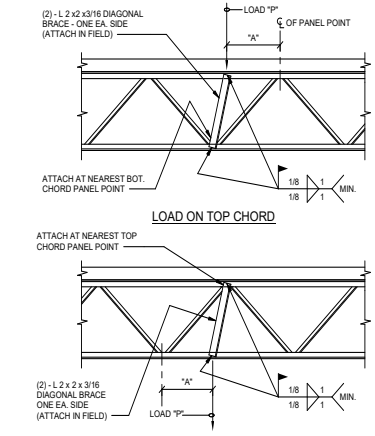

NOTES:
1. DIAGONAL BRACE IS NOT REQUIRED FOR "A" LESS THAN 3".
2. PROVIDE DIAGONAL BRACE AT LOCATION OF CONCENTRATED LOADS SUCH AS HEAVY PIPES, MECHANICAL UNITS, HEAVY LIGHTS AND ANY OTHER CONCENTRATED LOADS AS DIRECTED BY ENGINEER.
3. P = CONCENTRATED LOAD.

TYPICAL DETAIL
STIFFENING OF STEEL JOIST FOR CONCENTRATED LOADS

2 SCALE: N.T.S.

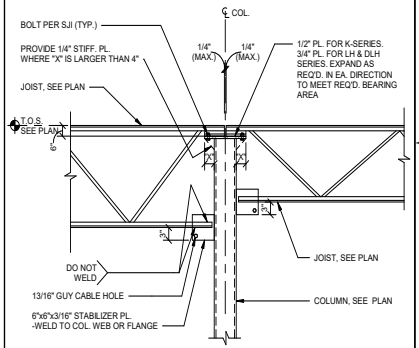

NOTES:
1. COORDINATE JOIST SEAT DEPTHS WITH JOIST SUPPLIER.
2. PER OSHA STANDARDS WHERE STEEL JOISTS ARE USED & COLUMNS ARE NOT FRAMED IN AT LEAST TWO DIRECTIONS WITH SOLID WEB STRUCTURAL STEEL MEMBERS, STEEL JOIST SHALL BE FIELD BOLTED TO COLUMN.
3. DIMENSION "X" SHALL BE DETERMINED BY JOIST MANUFACTURER.

TYPICAL DETAIL
JOIST SEAT AT TUBE COLUMN

10 SCALE: N.T.S.

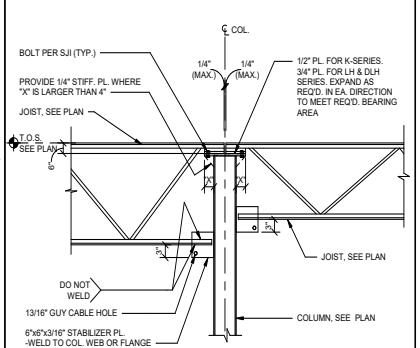

NOTES:
1. COORDINATE JOIST SEAT DEPTHS WITH JOIST SUPPLIER.
2. PER OSHA STANDARDS WHERE STEEL JOISTS ARE USED & COLUMNS ARE NOT FRAMED IN AT LEAST TWO DIRECTIONS WITH SOLID WEB STRUCTURAL STEEL MEMBERS, STEEL JOIST SHALL BE FIELD BOLTED TO COLUMN.
3. DIMENSION "X" SHALL BE DETERMINED BY JOIST MANUFACTURER.

TYPICAL DETAIL
JOIST SEAT AT WF COLUMN

8 SCALE: N.T.S.

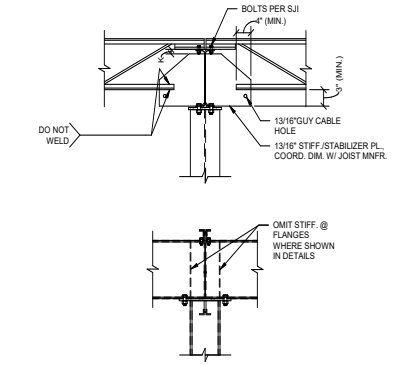

BEAM DEEPER THAN JOISTS

TYPICAL DETAIL
JOIST AT CONTINUOUS BEAM OVER COLUMN

4 SCALE: N.T.S.

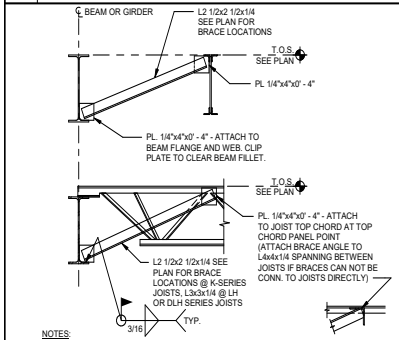

NOTES:
1. SEE PLAN/DETAILS FOR LOCATIONS OF ANGLE BRACES.
2. FIELD WELDING OF 1/4" CONNECTION PLATES SHALL BE AT FABRICATOR'S OPTION.
3. ALL BRACING SHALL BE IN PLACE AND WELDED BEFORE DECK INSTALLATION.
4. BRACE SIZES SHOWN ARE TYPICAL UNLESS NOTED OTHERWISE ON PLAN.
5. SEE GENERAL NOTES FOR DECK CONSTRUCTION.

TYPICAL DETAIL
BEAM BOTTOM FLANGE BRACE JOIST CONSTRUCTION

1 SCALE: N.T.S.

PROFESSIONAL SEAL
Matrix Structural Engineers
TBPE Firm Registration No. F-2640
STATE OF TEXAS
JAYDOLL A. KHAYRATTEE
68260
LICENSED
PROFESSIONAL ENGINEER
01/14/2020

LOGO/CONTACT

MATRIX STRUCTURAL ENGINEERS
5177 Richmond Avenue, Suite 670
Houston, TX 77056-2401
Tel: 713.664.0133
Fax: 713.664.1370
MSE - 18135

DESIGN TEAM

Architectural
Martinez Architects

Civil Engineer
Maverick Engineering

Structural
Matrix Structural engineers

MEP
DBR

Landscaping
KDC Associates

FIRE STATION #11

CITY OF MIDLAND
Briarwood Ave & Golden Gate Dr
Midland, TX 79707

PROJECT No: **MA 18017**
DATE: **01/14/2020**

ISSUE
100% DESIGN DEVELOPMENT 22-MAY-2019
75% CONSTRUCTION DOCUMENT 26-JUN-2019
100% ISSUE FOR PERMIT 30-JUL-2019
100% ISSUE FOR APPROVAL TO BID 16-JAN-2020

ROOF FRAMING DETAILS

S602

4.1427

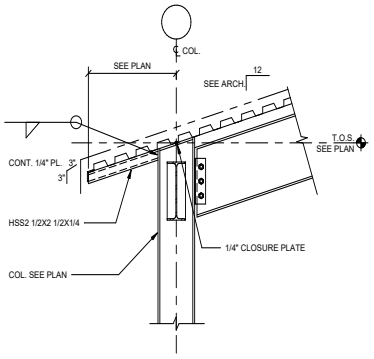

TYPICAL DETAIL
ROOF EDGE AT COLUMN WITH
W-BEAM PERPENDICULAR

12 SCALE: 3/4" = 1'-0"

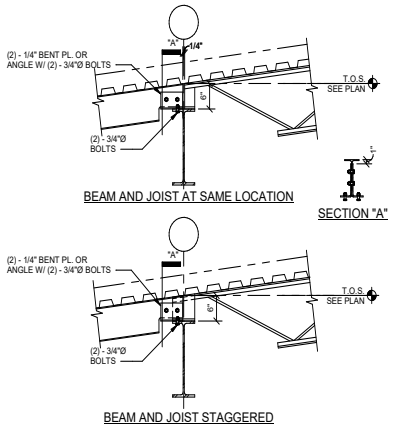

BEAM TO JOIST TRANSITION AT CANOPY

8 SCALE: 3/4" = 1'-0"

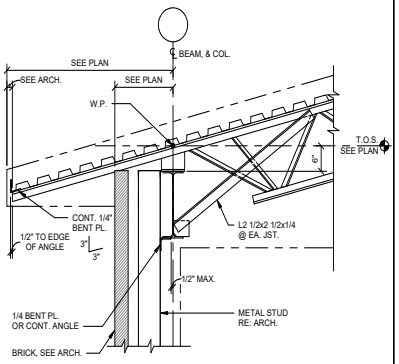

TYPICAL DETAIL
SLOPED OPEN WEB JOIST AT ROOF EDGE

6 SCALE: 3/4" = 1'-0"

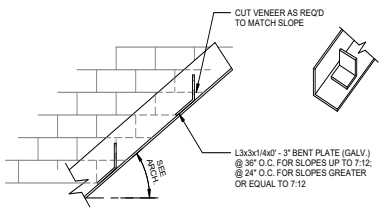

SUPPORT ANGLE AT SLOPED BRICK/STONE

3 SCALE: 1 1/2" = 1'-0"

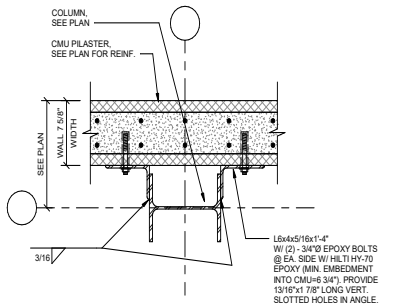

CMU TO COLUMN CONNECTION

11 SCALE: 1 1/2" = 1'-0"

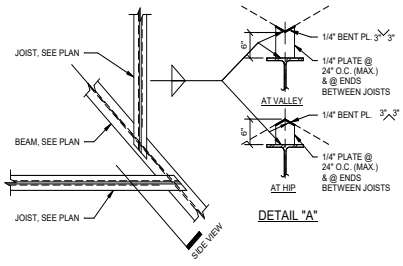

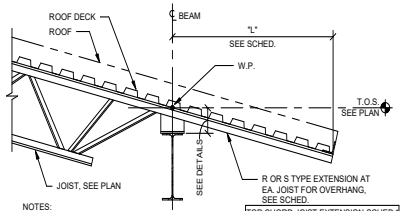

NOTES:
1. CONTRACTOR/JOIST MNFR. MAY CHOOSE EITHER TYPE JOIST EXTENSION SHOWN (OR LARGER) FOR "L" ≤ MAX. "L" SHOWN.
2. FOR ANY "L" JOIST, MNFR. MAY DESIGN JOIST EXTENSION FOR THE FOLLOWING CRITERIA IN LIEU OF SIZE SHOWN, U.N.O.:
TL = 240 PLF
TOTAL DEFLECTION ≤ 2 x "L" / 240
LL = 120 PLF
LIVE LOAD DEFLECTION < 2 x "L" / 360
MNFR. SHALL ACCOUNT FOR SKIP LOADING OF LIVE LOADS.
3. LOADS ON JOIST EXTENSIONS SHOWN ON PLAN OR IN DETAILS SHALL BE IN ADDITION TO THOSE SHOWN HERE. DEFLECTION CRITERIA SHALL REMAIN THE SAME AS SHOWN ABOVE. THE SCHEDULE SHOWN HERE DOES NOT APPLY WHERE ADDITIONAL LOADS ARE SHOWN.

TOP CHORD JOIST EXTENSION SCHED.*		
MAX. "L"	R-TYPE	S-TYPE
≤ 1' - 6"	R1	S3
2' - 0"	R1	S7
2' - 6"	R1	S10
3' - 0"	R1	S12
3' - 6"	R1	N/A
4' - 0"	R3	N/A
4' - 6"	R8	N/A
5' - 0"	R11	N/A
≥ 5' - 6"	DESIGN SPECIAL EXTENSION	

*CONTRACTOR/FABRICATOR MAY CHOOSE EITHER TYPE JOIST EXTENSION FOR "L" ≤ MAX. "L" SHOWN

TYPICAL DETAIL
K-JOIST EXTENSION SCHEDULE

5 SCALE: N.T.S.

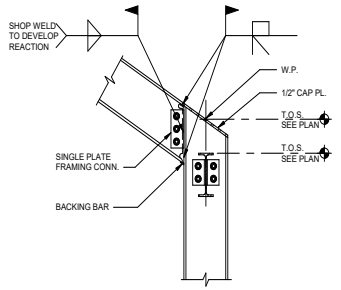

NOTE:
1. BOLTS IN WEB CONNECTION SHALL BE TIGHTENED PRIOR TO WELDING OF FLANGES.

TYPICAL DETAIL
STEEL BEAM TO COLUMN FLANGE
MOMENT CONNECTION

2 SCALE: N.T.S.

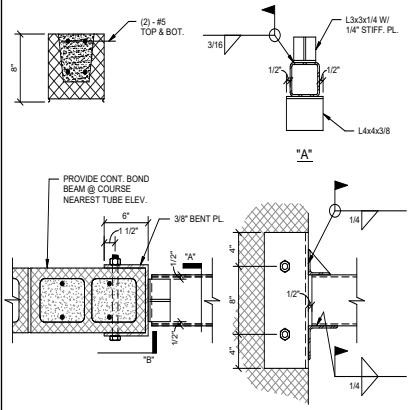

HSS TUBE AT CMU WALL

10 SCALE: 1 1/2" = 1'-0"

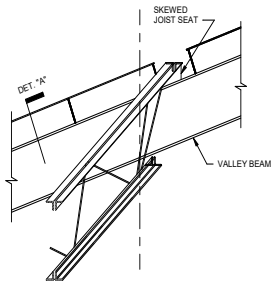

SECTION VIEW

DETAIL AT HIP AND VALLEY

7 SCALE: N.T.S.

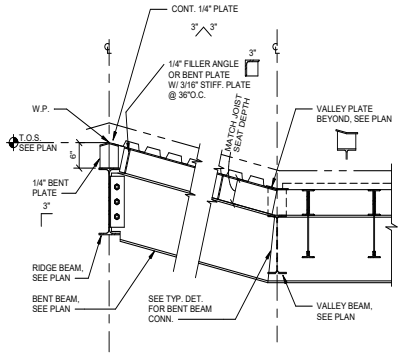

TYPICAL DETAIL
CHANGE IN DECK DIRECTION AT BENT BEAM

4 SCALE: N.T.S.

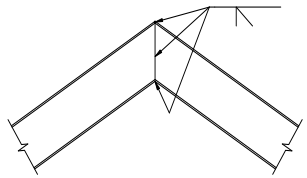

TYPICAL DETAIL
BENT BEAM

1 SCALE: N.T.S.

4.1428

PROFESSIONAL SEAL
Matrix Structural Engineers
TBPE Firm Registration No. F-2640

01/14/2020

LOGO/CONTACT

MATRIX
STRUCTURAL
ENGINEERS

5177 Richmond Avenue, Suite 670
Houston, TX 77056-2401
Tel: 713.664.0133
Fax: 713.664.1370
www.matrix-se.com
MSE - 18135

DESIGN TEAM

Architectural
Martinez Architects

Civil Engineer
Maverick Engineering

Structural
Matrix Structural engineers

MEP
DBR

Landscaping
KDC Associates

FIRE STATION #11

CITY OF MIDLAND
Briarwood Ave & Golden Gate Dr
Midland, TX 79707

PROJECT No: **MA 18017**
DATE: **01/14/2020**

ISSUE
100% DESIGN DEVELOPMENT 22-MAY-2019
75% CONSTRUCTION DOCUMENT 26-JUN-2019
100% ISSUE FOR PERMIT 30-JUL-2019
100% ISSUE FOR APPROVAL TO BID 16-JAN-2020

ROOF FRAMING DETAILS

S603

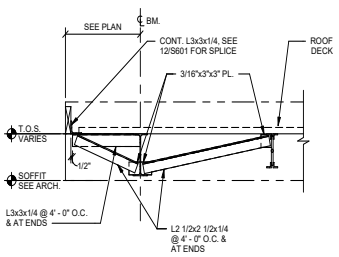

12 ROOF FRAMING DETAIL

SCALE: 3/4" = 1'-0"

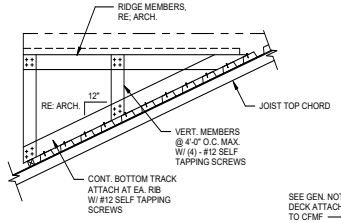

SECTION 'A'

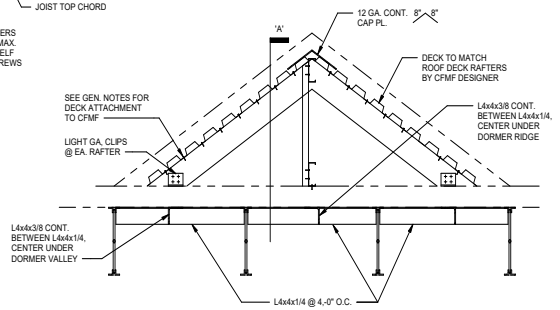

9 LIGHT GAUGE OVERBUILD

SCALE: N.T.S.

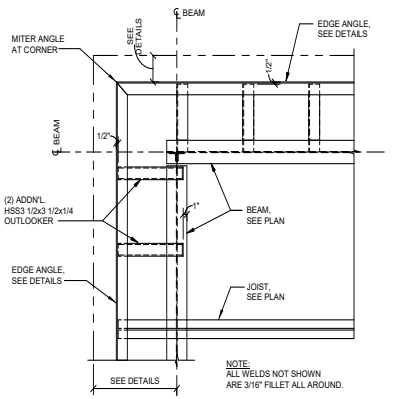

3 DETAIL AT CANTILEVERED ROOF CORNER

SCALE: N.T.S.

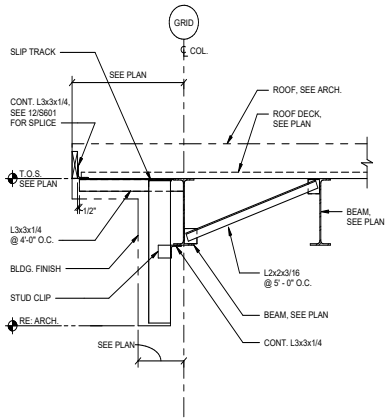

11 ROOF FRAMING DETAIL

SCALE: 3/4" = 1'-0"

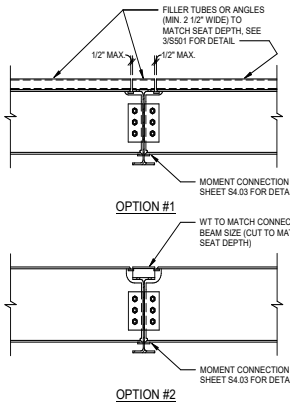

OPTION #1

OPTION #2

8 TYPICAL DETAIL STEEL BEAM TO BEAM MOMENT CONNECTION AT OFFSET GIRDER

SCALE: N.T.S.

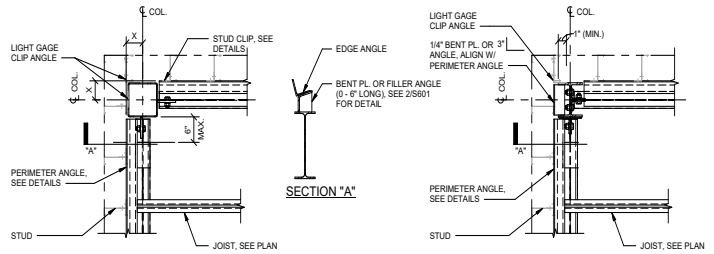

FOR X ≤ 7" AT HSS

SECTION "A"

FOR X ≤ 7" AT WIDE FLANGE

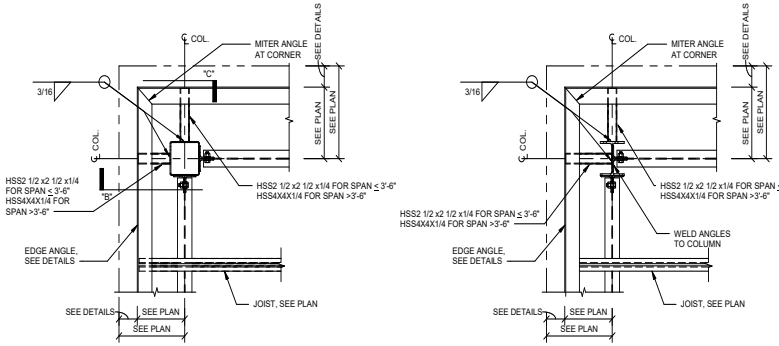

FOR X > 7" AT HSS

FOR X > 7" AT WIDE FLANGE

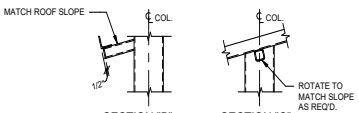

SECTION "B" SECTION "C"

TYPICAL DETAIL ROOF EDGE AT CORNER

SCALE: N.T.S.

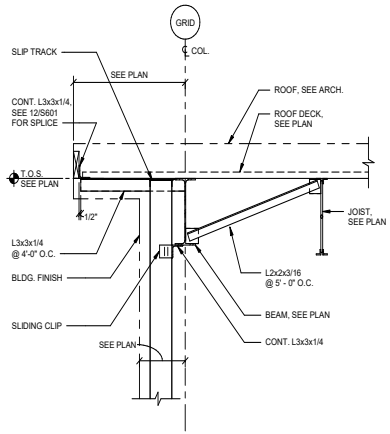

10 ROOF FRAMING DETAIL

SCALE: 3/4" = 1'-0"

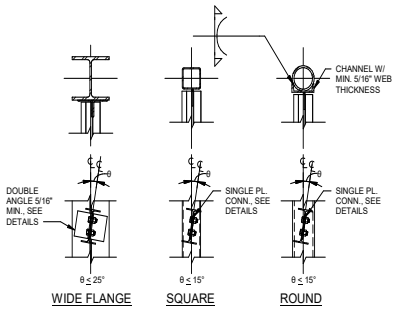

WIDE FLANGE SQUARE ROUND

TYPICAL DETAIL
CANTED BEAM TO COLUMN CONNECTION

SCALE: N.T.S.

PROFESSIONAL SEAL
Matrix Structural Engineers
TBPE Firm Registration No. F-2640
STATE OF TEXAS
JAYNDOL A. KHAYBATTIE
68260
LICENSED PROFESSIONAL ENGINEER
01/14/2020

LOGO/CONTACT
MATRIX STRUCTURAL ENGINEERS
5177 Richmond Avenue, Suite 670
Houston, TX 77046-2401
Tel: 713.664.0133
Fax: 713.664.1370
MSE - 18135

DESIGN TEAM
Architectural
Martinez Architects
Civil Engineer
Maverick Engineering
Structural
Matrix Structural engineers
MEP
DBR
Landscaping
KDC Associates

FIRE STATION #11

CITY OF MIDLAND

Briarwood Ave & Golden Gate Dr
Midland, TX 79707

PROJECT No: **MA 18017**
DATE: **01/14/2020**

ISSUE
100% DESIGN DEVELOPMENT 22-MAY-2019
75% CONSTRUCTION DOCUMENT 26-JUN-2019
100% ISSUE FOR PERMIT 30-JUL-2019
100% ISSUE FOR APPROVAL TO BID 16-JAN-2020

ROOF FRAMING DETAILS

S604

4.1429

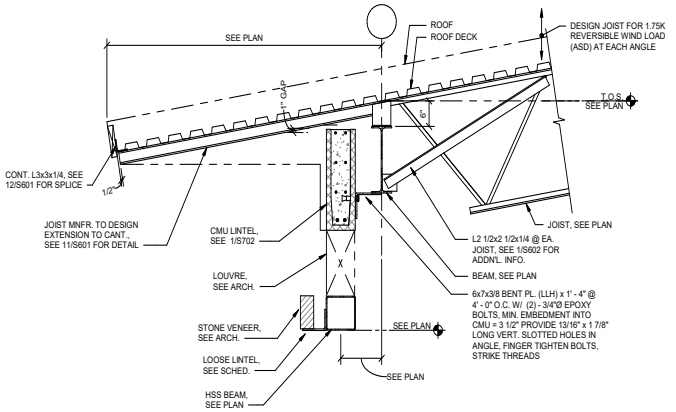

ROOF FRAMING DETAIL

6 SCALE: 3/4" = 1'-0"

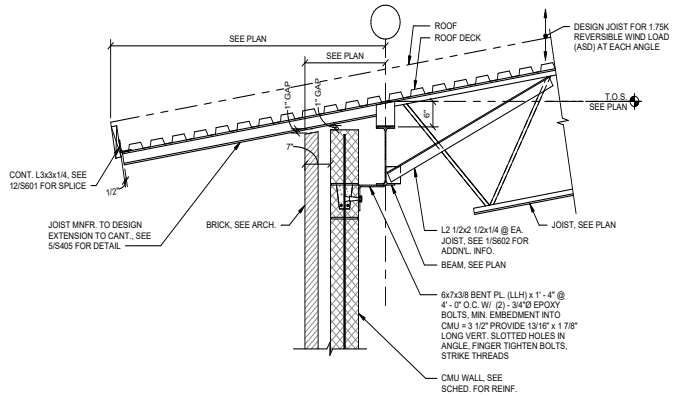

ROOF FRAMING DETAIL

3 SCALE: 3/4" = 1'-0"

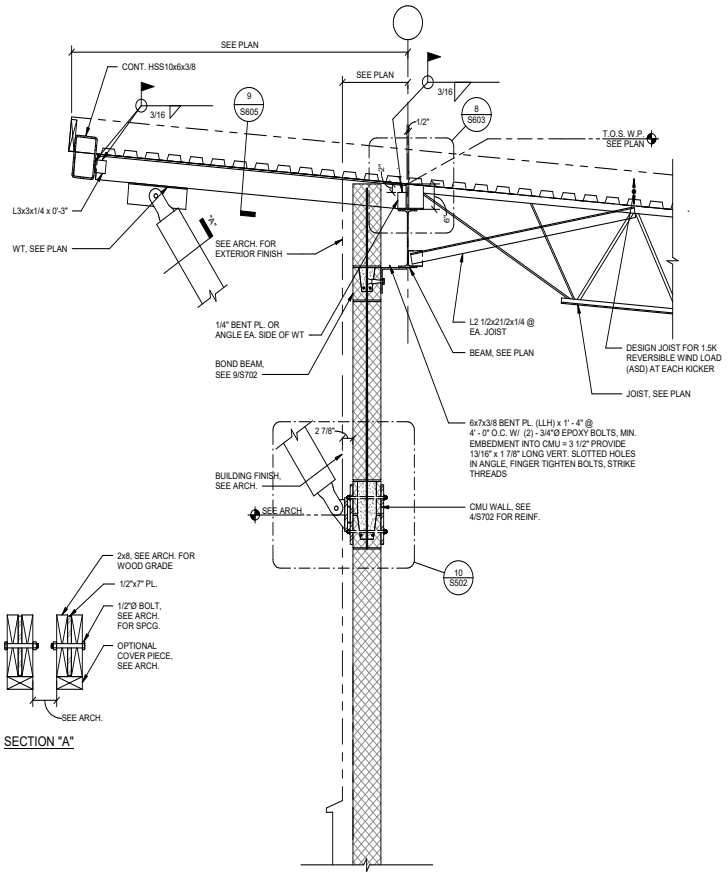

SECTION "A"

ROOF FRAMING DETAIL

7 SCALE: 3/4" = 1'-0"

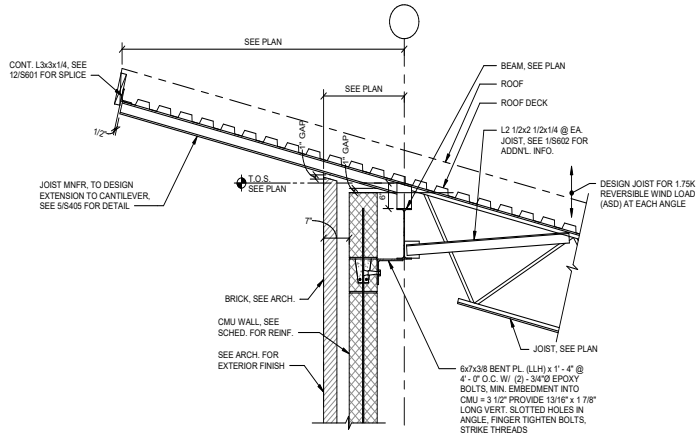

2 SCALE: 3/4" = 1'-0"

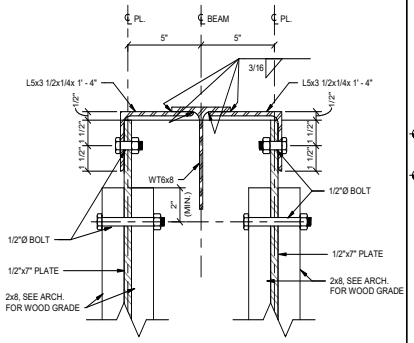

TUBE TO WT CONNECTION

9 SCALE: 3" = 1'-0"

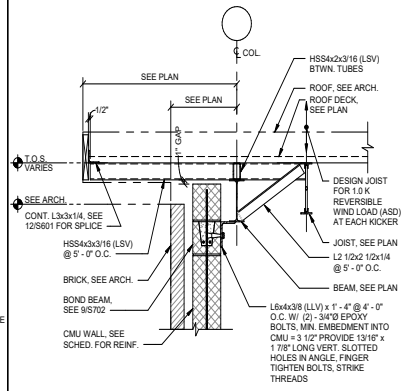

ROOF FRAMING DETAIL

1 SCALE: 3/4" = 1'-0"

PROFESSIONAL SEAL

Matrix Structural Engineers
TBPE Firm Registration No. F-2640

STATE OF TEXAS
JAYNDOL A. KHAYRATTEE
68260
LICENSED
PROFESSIONAL ENGINEER

01/14/2020

LOGO/CONTACT

MATRIX STRUCTURAL ENGINEERS

5177 Richmond Avenue, Suite 670
Houston, TX 77056-2401
Tel: 713.664.0133
Fax: 713.664.1370
TBPE Firm Registration No. F-2640
MSE - 18135

DESIGN TEAM

Architectural
Martinez Architects

Civil Engineer
Maverick Engineering

Structural
Matrix Structural engineers

MEP
DBR

Landscaping
KDC Associates

FIRE STATION #11

CITY OF MIDLAND

Briarwood Ave & Golden Gate Dr
Midland, TX 79707

PROJECT No: **MA 18017**
DATE: **01/14/2020**

ISSUE

100% DESIGN DEVELOPMENT 22-MAY-2019
75% CONSTRUCTION DOCUMENT 26-JUN-2019
100% ISSUE FOR PERMIT 30-JUL-2019
100% ISSUE FOR APPROVAL TO BID 16-JAN-2020

ROOF FRAMING DETAILS

S605

4.1430

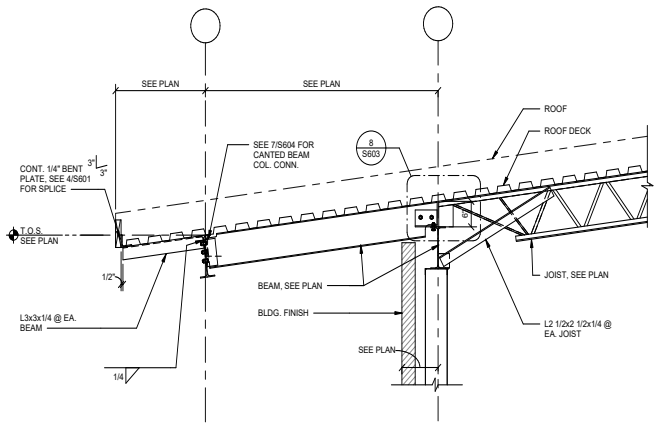

12 SCALE: 3/4" = 1'-0"

ROOF FRAMING DETAIL

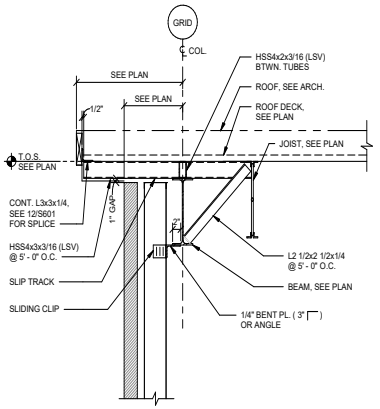

6 SCALE: 3/4" = 1'-0"

ROOF FRAMING DETAIL

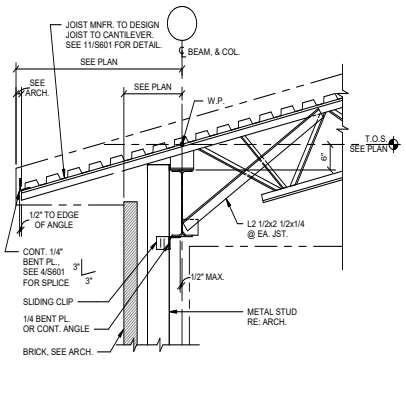

3 SCALE: 3/4" = 1'-0"

TYPICAL DETAIL
SLOPED OPEN WEB JOIST AT ROOF EDGE

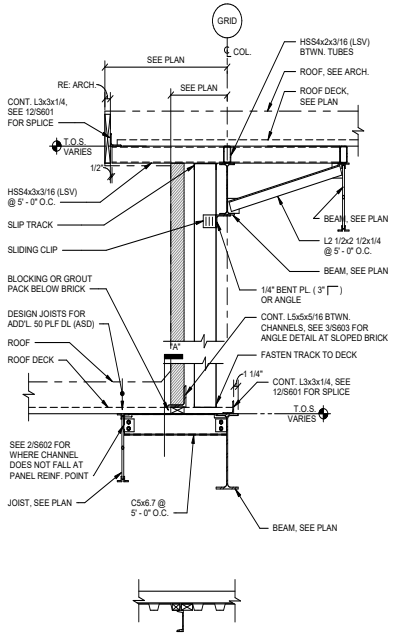

SECTION "A"

7 SCALE: 3/4" = 1'-0"

ROOF FRAMING DETAIL

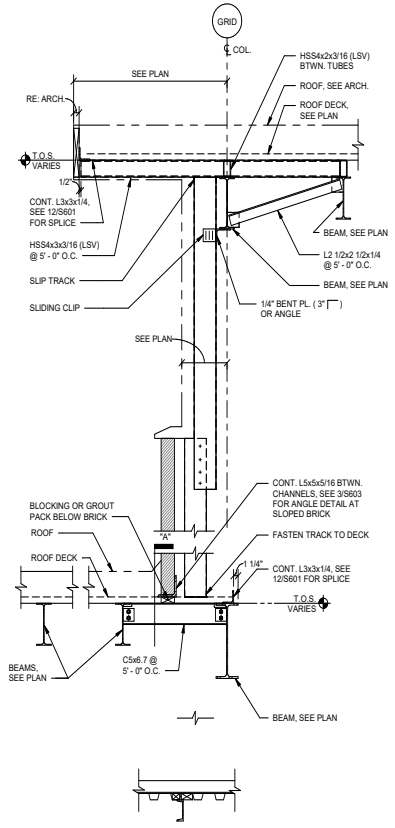

SECTION "A"

4 SCALE: 3/4" = 1'-0"

ROOF FRAMING DETAIL

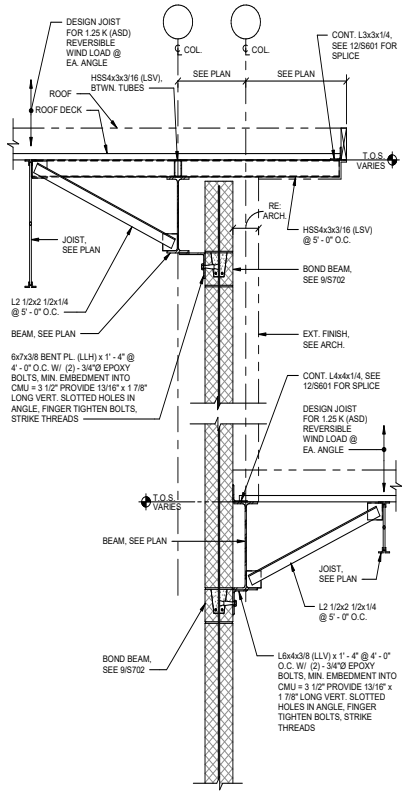

1 SCALE: 3/4" = 1'-0"

ROOF FRAMING DETAIL

PROFESSIONAL SEAL

Matrix Structural Engineers
TBPE Firm Registration No. F-2640

STATE OF TEXAS
JAYNDOL A. KHAYRATTEE
65260
LICENSED
PROFESSIONAL ENGINEER

01/14/2020

LOGO/CONTACT

MATRIX STRUCTURAL ENGINEERS

5177 Richmond Avenue, Suite 670
Houston, TX 77056-2401
Tel: 713.664.0133
Fax: 713.664.1370
MSE - 18135

DESIGN TEAM

Architectural
Martinez Architects

Civil Engineer
Maverick Engineering

Structural
Matrix Structural engineers

MEP
DBR

Landscaping
KDC Associates

FIRE STATION #11

CITY OF MIDLAND
Briarwood Ave & Golden Gate Dr
Midland, TX 79707

PROJECT No: **MA 18017**
DATE: **01/14/2020**

ISSUE

100% DESIGN DEVELOPMENT 22-MAY-2019
75% CONSTRUCTION DOCUMENT 26-JUN-2019
100% ISSUE FOR PERMIT 30-JUL-2019
100% ISSUE FOR APPROVAL TO BID 16-JAN-2020

ROOF FRAMING DETAILS

S606

4.1431

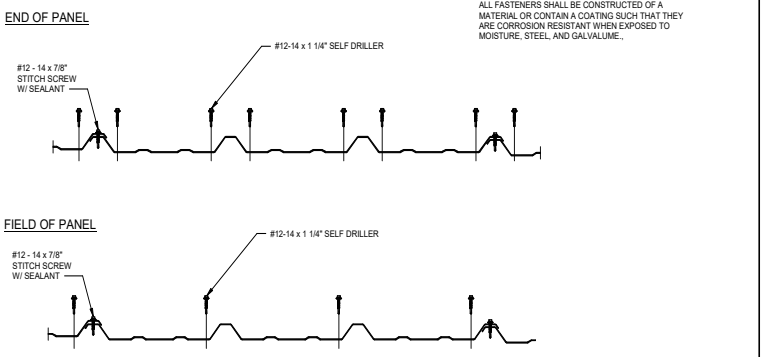

NOTE:
ALL FASTENERS SHALL BE CONSTRUCTED OF A MATERIAL OR CONTAIN A COATING SUCH THAT THEY ARE CORROSION RESISTANT WHEN EXPOSED TO MOISTURE, STEEL, AND GALVALUME.,

TYPICAL DETAIL
R-PANEL ATTACHMENT FASTENING PATTERNS

12 SCALE: 3/8" = 1'-0"

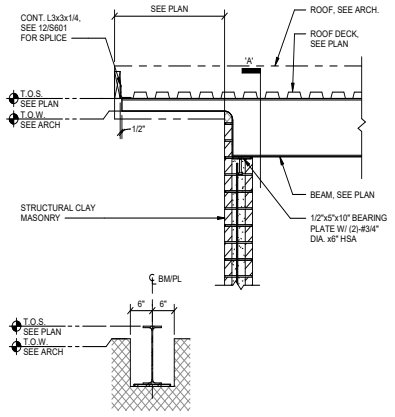

SECTION 'A'

ROOF FRAMING DETAIL

6 SCALE: 3/4" = 1'-0"

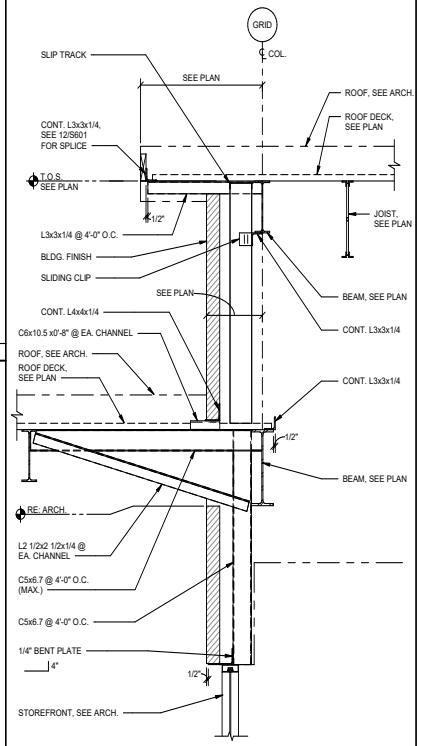

ROOF FRAMING DETAIL

5 SCALE: 3/4" = 1'-0"

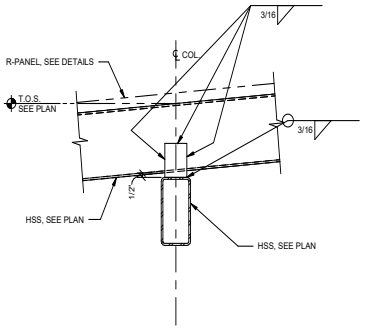

2 SCALE: 1 1/2" = 1'-0"

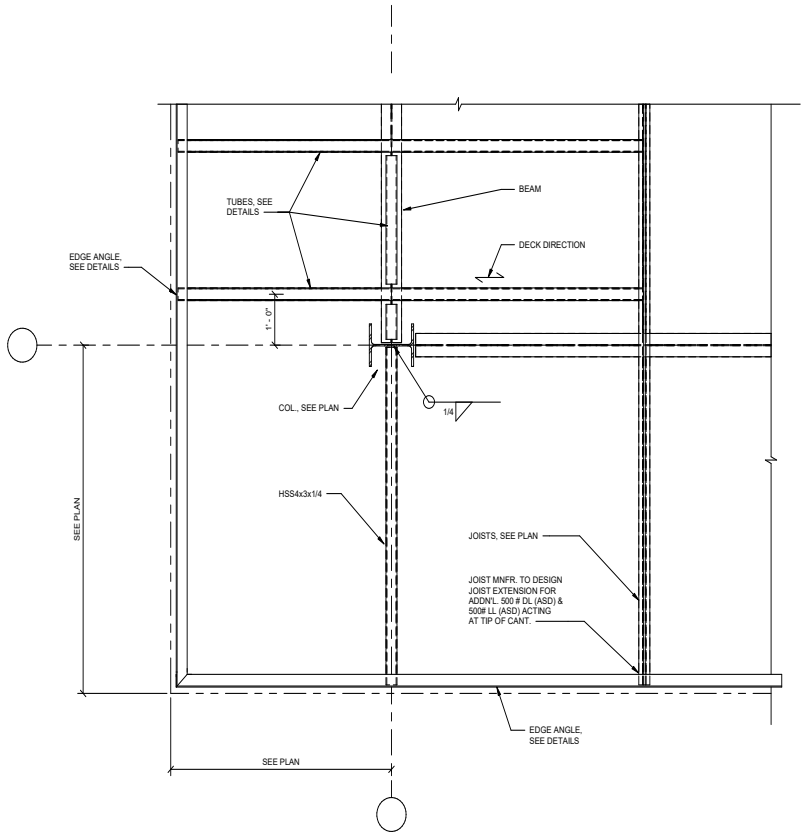

EXTERIOR PERIMETER CORNER ROOF FRAMING DETAIL

10 SCALE: 3/4" = 1'-0"

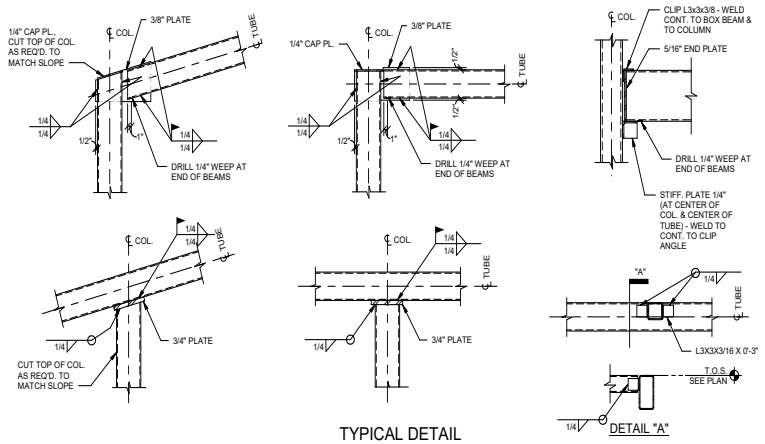

TYPICAL DETAIL
TUBE BEAM TO TUBE COLUMN CONNECTION

3 SCALE: 3/4" = 1'-0"

PROFESSIONAL SEAL
Matrix Structural Engineers
TBPE Firm Registration No. F-2640
STATE OF TEXAS
JAYNOOL A. KHAYRATTEE
68260
LICENSED PROFESSIONAL ENGINEER
01/14/2020

LOGO/CONTACT
MATRIX STRUCTURAL ENGINEERS
5177 Richmond Avenue, Suite 670
Houston, TX 77046-2401
Tel: 713.664.0130
Fax: 713.664.1370
MSE - 18135

DESIGN TEAM

Architectural
Martinez Architects

Civil Engineer
Maverick Engineering

Structural
Matrix Structural engineers

MEP
DBR

Landscaping
KDC Associates

FIRE STATION #11

CITY OF MIDLAND
Briarwood Ave & Golden Gate Dr
Midland, TX 79707

PROJECT No: **MA 18017**
DATE: **01/14/2020**

ISSUE
100% DESIGN DEVELOPMENT 22-MAY-2019
75% CONSTRUCTION DOCUMENT 26-JUN-2019
100% ISSUE FOR PERMIT 30-JUL-2019
100% ISSUE FOR APPROVAL TO BID 16-JAN-2020

ROOF FRAMING DETAILS

S607

4.1432

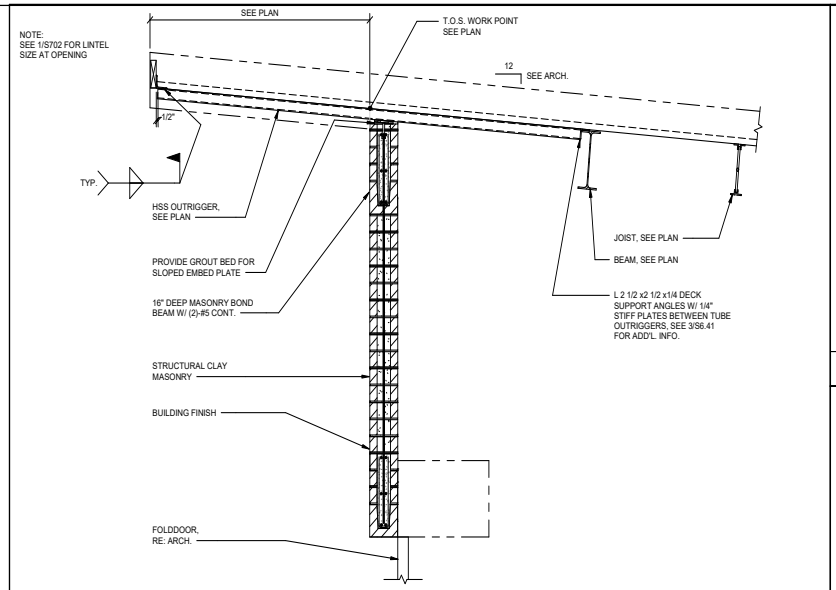

12 ROOF FRAMING DETAIL

SCALE: 3/4" = 1'-0"

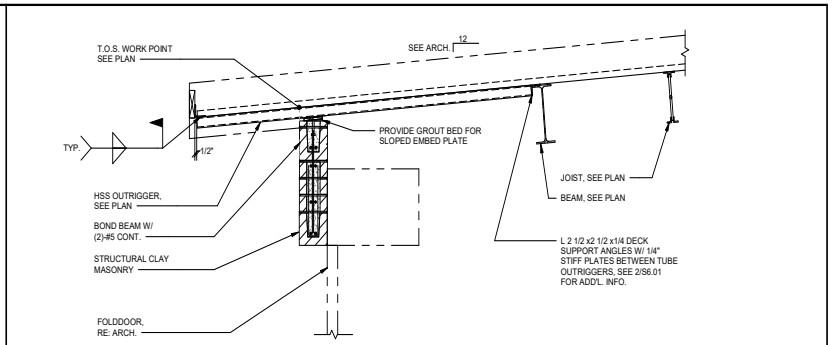

6 ROOF FRAMING DETAIL

SCALE: 3/4" = 1'-0"

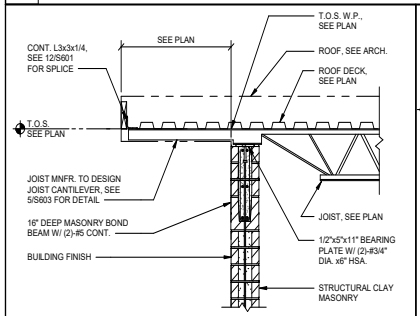

11 ROOF FRAMING DETAIL AT OUTBUILDINGS

SCALE: 3/4" = 1'-0"

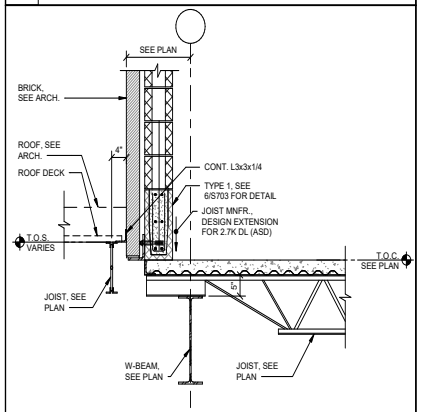

10 DETAIL AT ROOF

SCALE: 3/4" = 1'-0"

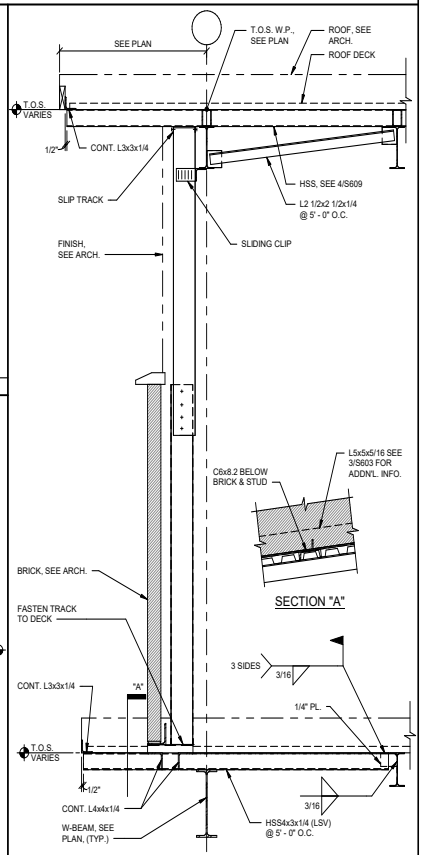

7 DETAIL AT ROOF

SCALE: 3/4" = 1'-0"

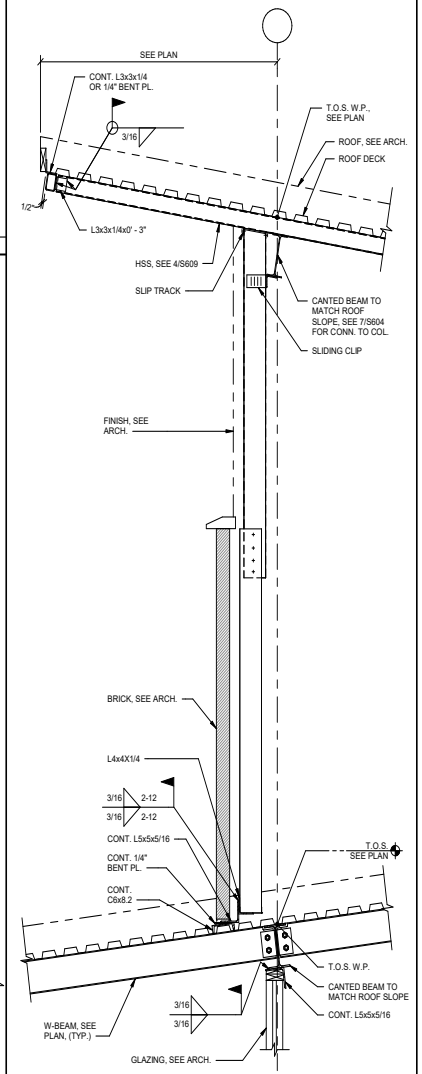

4 DETAIL AT ROOF

SCALE: 3/4" = 1'-0"

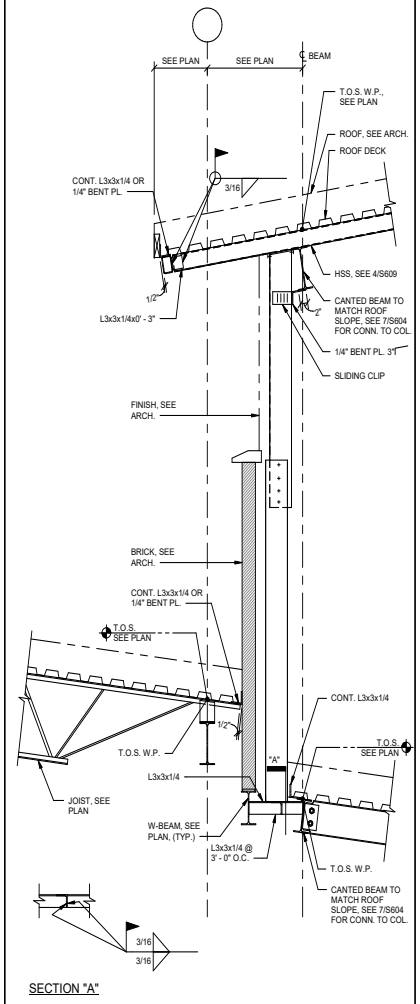

SECTION "A"

1 DETAIL AT ROOF

SCALE: 3/4" = 1'-0"

PROFESSIONAL SEAL

Matrix Structural Engineers
TBPE Firm Registration No. F-2640

STATE OF TEXAS
JAYNOOL A. KHAYRATTEE
68260
LICENSED
PROFESSIONAL ENGINEER

01/14/2020

LOGO/CONTACT

MATRIX
STRUCTURAL
ENGINEERS

5177 Richmond Avenue, Suite 670
Houston, TX 77046-2401
Tel: 713.664.0133
Fax: 713.664.1370
MSE - 18135

DESIGN TEAM

Architectural
Martinez Architects

Civil Engineer
Maverick Engineering

Structural
Matrix Structural engineers

MEP
DBR

Landscaping
KDC Associates

FIRE STATION #11

CITY OF MIDLAND

Briarwood Ave & Golden Gate Dr
Midland, TX 79707

PROJECT No: **MA 18017**
DATE: **01/14/2020**

ISSUE

100% DESIGN DEVELOPMENT
22-MAY-2019

75% CONSTRUCTION DOCUMENT
26-JUN-2019

100% ISSUE FOR PERMIT
30-JUL-2019

100% ISSUE FOR APPROVAL TO BID
16-JAN-2020

ROOF FRAMING DETAILS

S608

4.1433

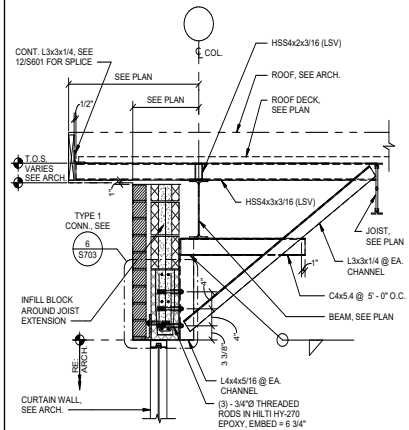

12 DETAIL AT MEZZANINE

SCALE: 3/4" = 1'-0"

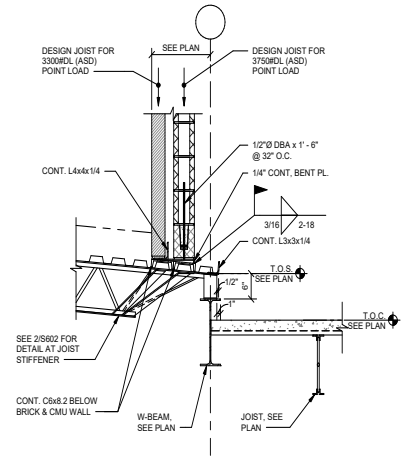

9 DETAIL AT ROOF/MEZZANINE

SCALE: 3/4" = 1'-0"

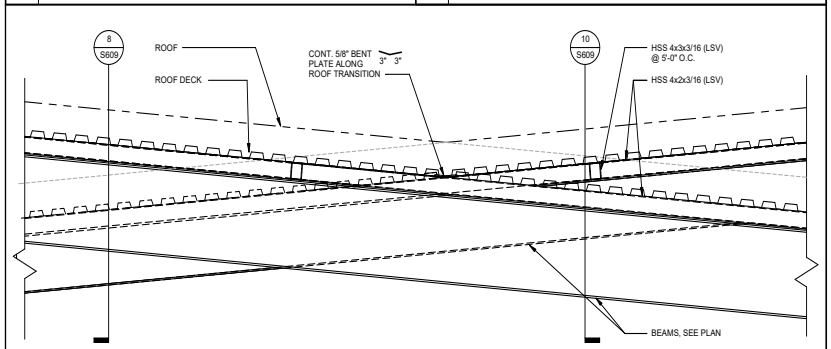

NOTE:
PERIMETER ANGLE NOT SHOWN FOR CLARITY.
COPE AT TRANSITION TO MATCH SLOPE.

11 DECK SUPPORT AT ROOF TRANSITION

SCALE: 3/4" = 1'-0"

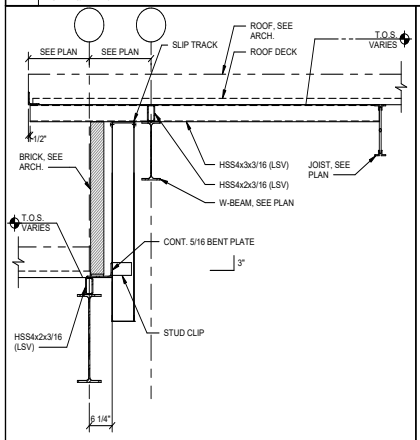

10 DETAIL AT ROOF

SCALE: 3/4" = 1'-0"

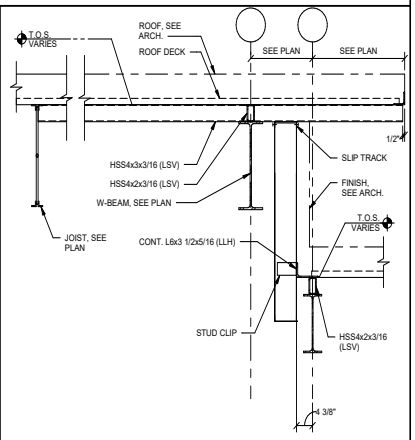

8 DETAIL AT ROOF

SCALE: 3/4" = 1'-0"

NOTE:
1. SEE SHEET S212 FOR ADDNL. INFO.

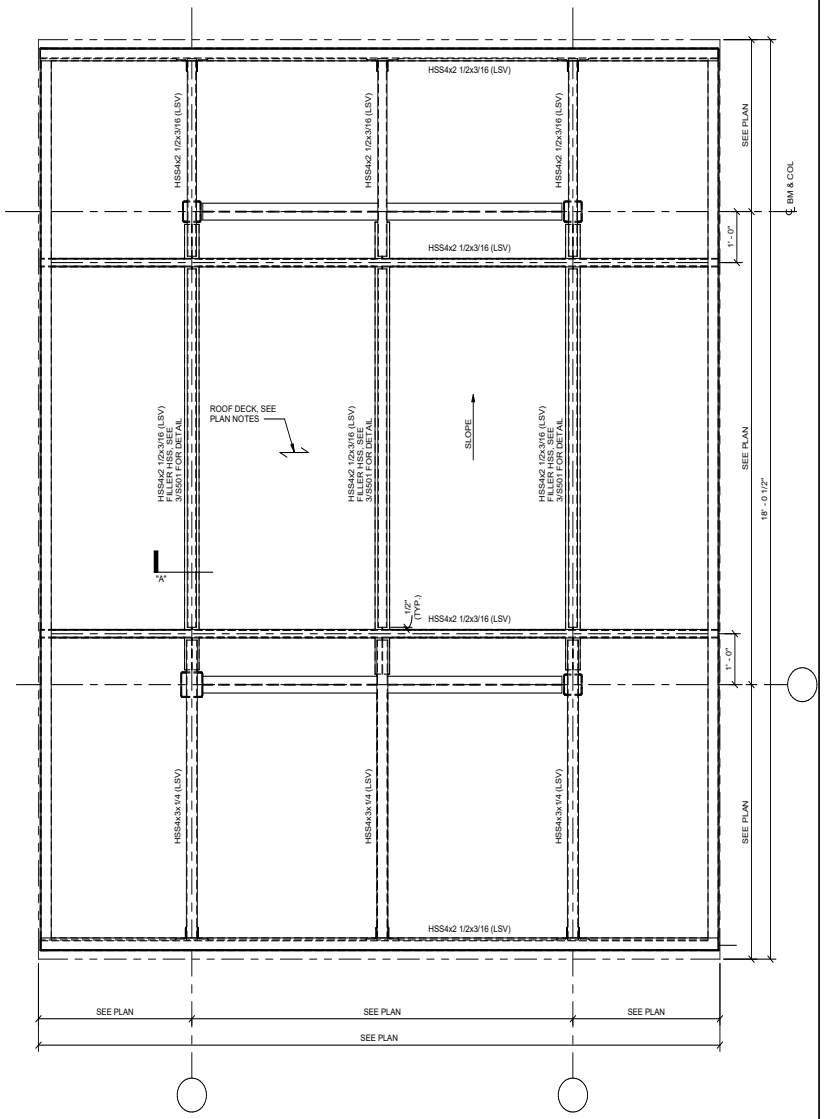

SECTION "A"

4 PARTIAL ENLARGED HIGH ROOF FRAMING PLAN - FIRE STATION

SCALE: 3/4" = 1'-0"

PROFESSIONAL SEAL

Matrix Structural Engineers
TBPE Firm Registration No. F-2640

01/14/2020

LOGO/CONTACT

MATRIX STRUCTURAL ENGINEERS

5177 Richmond Avenue, Suite 670
Houston, TX 77046-2401
Tel: 713.664.0133
Fax: 713.664.1370
MSE - 18135

DESIGN TEAM

Architectural
Martinez Architects

Civil Engineer
Maverick Engineering

Structural
Matrix Structural engineers

MEP
DBR

Landscaping
KDC Associates

FIRE STATION #11

CITY OF MIDLAND
Briarwood Ave & Golden Gate Dr
Midland, TX 79707

PROJECT No: **MA 18017**
DATE: **01/14/2020**

ISSUE

100% DESIGN DEVELOPMENT
22-MAY-2019

75% CONSTRUCTION DOCUMENT
26-JUN-2019

100% ISSUE FOR PERMIT
30-JUL-2019

100% ISSUE FOR APPROVAL TO BID
16-JAN-2020

ROOF FRAMING DETAILS

S609

4.1434

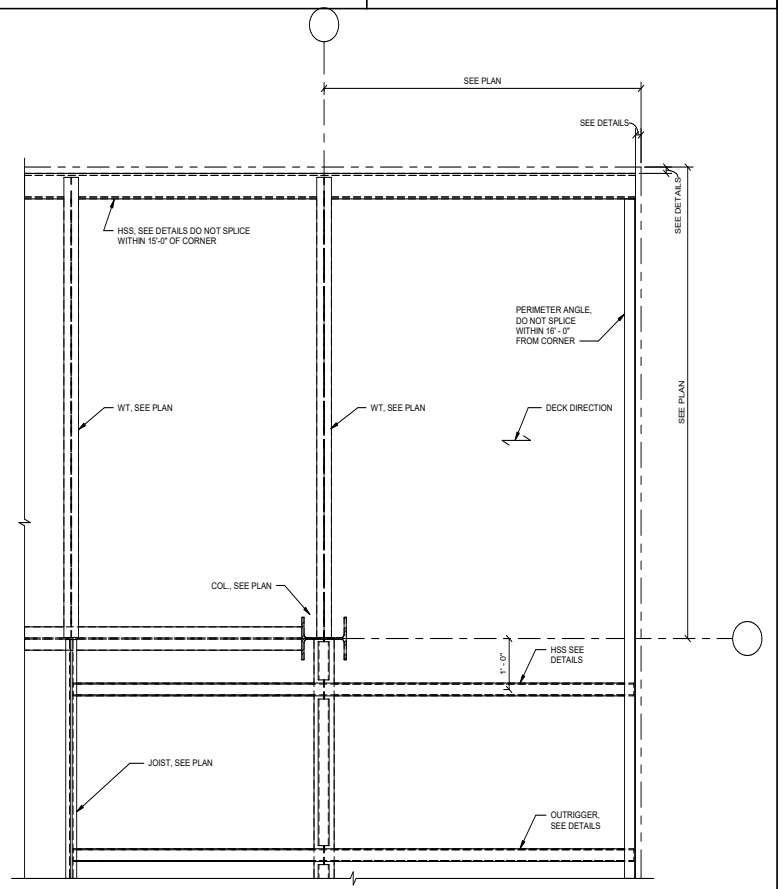

4 EXTERIOR PERIMETER CORNER ROOF FRAMING DETAIL

SCALE: 3/4" = 1'-0"

4.1435

PROFESSIONAL SEAL

Matrix Structural Engineers
TBPE Firm Registration No. F-2640

STATE OF TEXAS
JAYNOOL A. KHAYRATTEE
65260
LICENSED
PROFESSIONAL ENGINEER

01/14/2020

LOGO/CONTACT

MATRIX
STRUCTURAL
ENGINEERS

5177 Richmond Avenue, Suite 670
Houston, TX 77046-2401
Tel: 713.664.0135
Fax: 713.664.1370
MSE - 18135

DESIGN TEAM

Architectural
Martinez Architects

Civil Engineer
Maverick Engineering

Structural
Matrix Structural engineers

MEP
DBR

Landscaping
KDC Associates

FIRE STATION #11

CITY OF MIDLAND
Briarwood Ave & Golden Gate Dr
Midland, TX 79707

PROJECT No: **MA 18017**
DATE: **01/14/2020**

ISSUE

100% DESIGN DEVELOPMENT
22-MAY-2019

75% CONSTRUCTION DOCUMENT
26-JUN-2019

100% ISSUE FOR PERMIT
30-JUL-2019

100% ISSUE FOR APPROVAL TO BID
16-JAN-2020

ROOF FRAMING DETAILS

S610

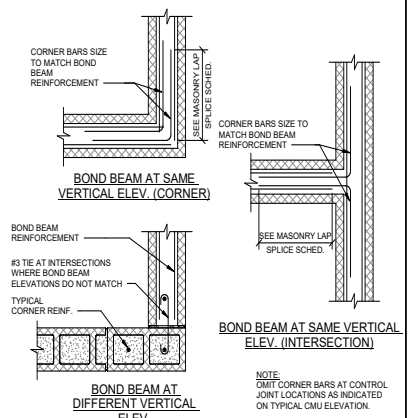

NOTE:
OMIT CORNER BARS AT CONTROL JOINT LOCATIONS AS INDICATED ON TYPICAL CMU ELEVATION.

TYPICAL CMU BOND BEAM REINFORCEMENT

12 SCALE: N.T.S.

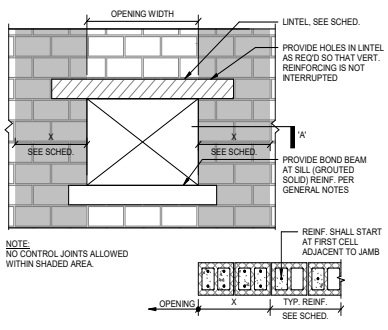

NOTE:
NO CONTROL JOINTS ALLOWED WITHIN SHADED AREA.

SECTION 'A'

OPENING SIZE	JAMB WIDTH 'X'	JAMB REINF.
≥ 3' - 0" & ≤ 5' - 0"	2' - 0"	(2) - #5 @ 8" O.C.
≤ 10' - 0"	3' - 0"	(2) - #5 @ 8" O.C.
≤ 17' - 4"	4' - 0"	(2) - #7 @ 8" O.C.

CMU JAMB REINFORCING SCHEDULE

9 SCALE: N.T.S.

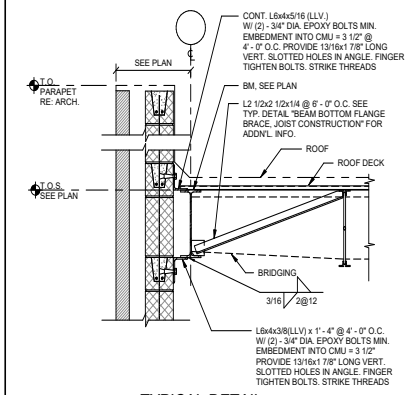

TYPICAL DETAIL
EXTERIOR EDGE AT CMU
(JOIST PARALLEL TO BEAMS)

6 SCALE: 3/4" = 1'-0"

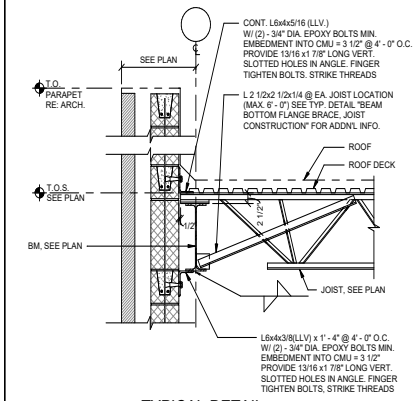

TYPICAL DETAIL
EXTERIOR EDGE AT CMU
(JOIST PERPENDICULAR TO BEAMS)

3 SCALE: 3/4" = 1'-0"

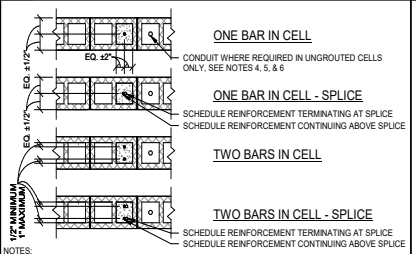

NOTES:
1. REINFORCEMENT MUST BE PLACED USING REINFORCING BAR POSITIONERS THAT LOCATE THE BAR AS SPECIFIED AND PREVENT MOVEMENT OF THE BAR DURING CONSTRUCTION.
2. SPLICED REINFORCEMENT MUST BE A CONTACT LAP SPLICE WITH SPLICED BARS ALIGNED PARALLEL TO THE WALL AS SHOWN.
3. THE ENGINEER MUST BE NOTIFIED PRIOR TO PLACEMENT OF REINFORCEMENT THAT IS REQUIRED TO BE PLACED OUTSIDE OF THE TOLERANCES OF THIS DETAIL SUCH AS TO AVOID INTERFERENCE WITH OTHER REINFORCEMENT, CONDUITS, OR EMBEDDED ITEMS.
4. CONDUIT, PIPES AND SLEEVES SHALL BE NO CLOSER THAN 3 DIAMETERS ON CENTER (USE LARGER DIAMETER WHERE MULTIPLE SIZES ARE USED).
5. ALUMINUM PIPES MAY NOT BE USED UNLESS EFFECTIVELY COATED TO PREVENT CHEMICAL REACTION.
6. PIPES SHALL NOT BE EMBEDDED IN MASONRY WHEN:
   (a) CONTAINING LIQUIDS, GAS, OR VAPORS AT A TEMPERATURE HIGHER THAN 150°F (66°C).
   (b) UNDER PRESSURE IN EXCESS OF 55 PSI (379 KPA).
   (c) CONTAINING WATER OR OTHER LIQUIDS SUBJECT TO FREEZING.

TYPICAL DETAIL
CMU VERTICAL BAR PLACEMENT

11 SCALE: N.T.S.

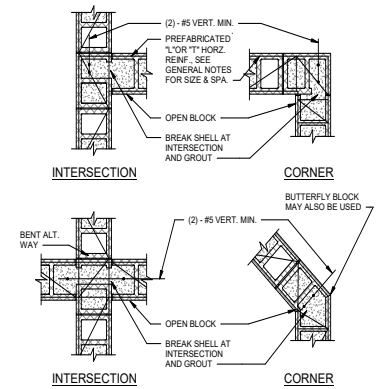

CMU WALL INTERSECTIONS

8 SCALE: N.T.S.

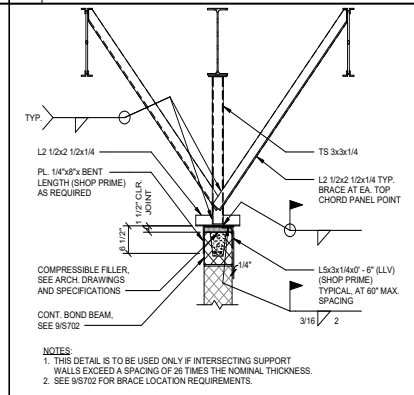

NOTES:
1. THIS DETAIL IS TO BE USED ONLY IF INTERSECTING SUPPORT WALLS EXCEED A SPACING OF 26 TIMES THE NOMINAL THICKNESS.
2. SEE 9/S702 FOR BRACE LOCATION REQUIREMENTS.

TYPICAL DETAIL
INTERIOR NON-LOAD BEARING CMU WALL
TOP CONNECTION TO STEEL BEAM

5 SCALE: N.T.S.

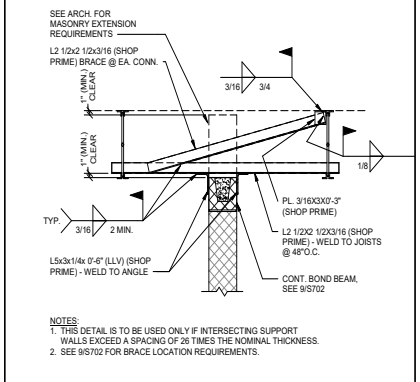

NOTES:
1. THIS DETAIL IS TO BE USED ONLY IF INTERSECTING SUPPORT WALLS EXCEED A SPACING OF 26 TIMES THE NOMINAL THICKNESS.
2. SEE 9/S702 FOR BRACE LOCATION REQUIREMENTS.

TYPICAL DETAIL
INTERIOR NON-LOAD BEARING CMU WALL TOP
CONNECTION PARALLEL TO BAR JOISTS

2 SCALE: N.T.S.

BAR SIZE	MINIMUM LAP SPLICE LENGTH REINFORCEMENT AT CENTER OF WALL 6" CMU	8" CMU	10" CMU	12" CMU	REINFORCEMENT OFF CENTER ANY
3	12	12	12	12	19
4	20	15	12	12	34
5	32[4]	23	18	15	45
6	54[4]	43	34	28	54
7	N/A[3]	60	46	38	63
8	N/A[3]	72	71	57	72

NOTES:
1. TABLE FOR USE WITH GRADE 60 UNCOATED REINF. BARS IN CMU (f'm = 2000 psi)
2. BARS SPLICED BY NON-CONTACT LAP SPLICE SHALL NOT BE SPACED FARTHER APART THAN, ONE-FIFTH THE REQUIRED LAP LENGTH, OR 8".
3. LAP LENGTHS PER IBC 2012.
4. PERMITTED ONLY IF ALL MORTAR FINS ARE REMOVED ROM THE CELL TO BE GROUTED.
5. BAR EXCEEDS MAX. ALLOWABLE SIZE.

TYPICAL DETAIL
MASONRY TENSION LAP SPLICE (INCHES)

10 SCALE: N.T.S.

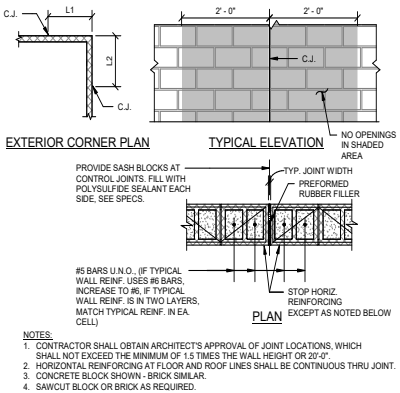

NOTES:
1. CONTRACTOR SHALL OBTAIN ARCHITECT'S APPROVAL OF JOINT LOCATIONS, WHICH SHALL NOT EXCEED THE MINIMUM OF 1.5 TIMES THE WALL HEIGHT OR 20'-0".
2. HORIZONTAL REINFORCING AT FLOOR AND ROOF LINES SHALL BE CONTINUOUS THRU JOINT.
3. CONCRETE BLOCK SHOWN - BRICK SIMILAR.
4. SAWCUT BLOCK OR BRICK AS REQUIRED.
5. AT EXTERIOR CORNERS LOCATE JOINTS SUCH THAT:
   L1+L2 ≤ 20' - 0",
   EITHER L1 OR L2 ≤ 10' - 0".

MASONRY WALL CONTROL JOINT

7 SCALE: N.T.S.

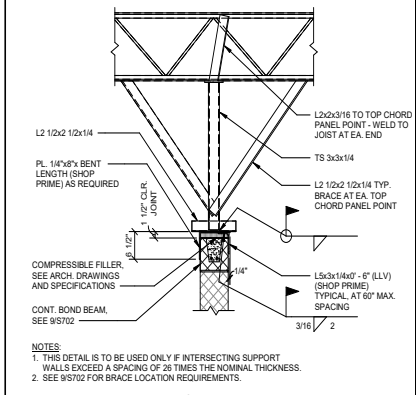

NOTES:
1. THIS DETAIL IS TO BE USED ONLY IF INTERSECTING SUPPORT WALLS EXCEED A SPACING OF 26 TIMES THE NOMINAL THICKNESS.
2. SEE 9/S702 FOR BRACE LOCATION REQUIREMENTS.

TYPICAL DETAIL
INTERIOR NON-LOAD BEARING CMU WALL TOP
CONNECTION PERPENDICULAR TO JOISTS

4 SCALE: N.T.S.

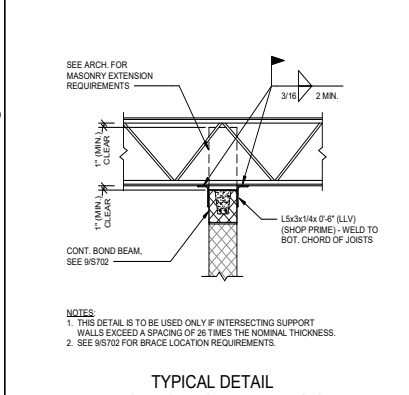

NOTES:
1. THIS DETAIL IS TO BE USED ONLY IF INTERSECTING SUPPORT WALLS EXCEED A SPACING OF 26 TIMES THE NOMINAL THICKNESS.
2. SEE 9/S702 FOR BRACE LOCATION REQUIREMENTS.

TYPICAL DETAIL
INTERIOR NON-LOAD BEARING CMU
WALL TOP CONNECTION
PERPENDICULAR TO BAR JOISTS

1 SCALE: N.T.S.

4.1436

PROFESSIONAL SEAL
Matrix Structural Engineers
TBPE Firm Registration No. F-2640
STATE OF TEXAS
JAYNDOL A. KHAYRATTEE
65260
LICENSED PROFESSIONAL ENGINEER
01/14/2020

LOGO/CONTACT
MATRIX STRUCTURAL ENGINEERS
5177 Richmond Avenue, Suite 670
Houston, TX 77046-2401
Tel: 713.664.0133
Fax: 713.664.1370
MSE - 18135

DESIGN TEAM
Architectural
Martinez Architects
Civil Engineer
Maverick Engineering
Structural
Matrix Structural engineers
MEP
DBR
Landscaping
KDC Associates

FIRE STATION #11
CITY OF MIDLAND
Briarwood Ave & Golden Gate Dr
Midland, TX 79707

PROJECT No: **MA 18017**
DATE: **01/14/2020**

ISSUE
100% DESIGN DEVELOPMENT 22-MAY-2019
75% CONSTRUCTION DOCUMENT 26-JUN-2019
100% ISSUE FOR PERMIT 30-JUL-2019
100% ISSUE FOR APPROVAL TO BID 16-JAN-2020

MASONRY DETAILS

S701

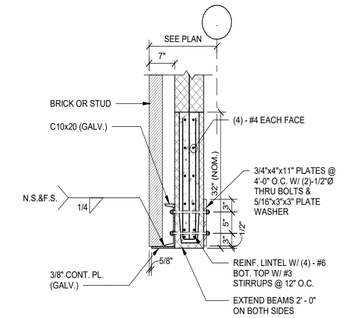

FOR OPENING UP TO 14'-0" WIDE

NOTES:
1. SEE ARCH. DRAWINGS FOR SIZE AND LOCATION OF OPENINGS.
2. PROVIDE 1" OF BEARING @ EACH JAMB FOR EACH FOOT OF CLEAR SPAN BUT NOT LESS THAN 8". REINF. SHALL PROJECT A MIN. OF 6" ONTO THE BEARING.
3. BOND BEAMS SHALL BE FULLY GROUTED (2500 PSI @ 28 DAYS)

LONG SPAN LINTEL

12 SCALE: N.T.S.

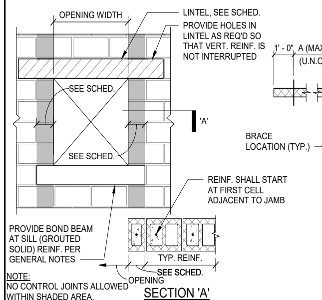

NOTE:
NO CONTROL JOINTS ALLOWED WITHIN SHADED AREA.

INTERIOR NON-LOAD BEARING CMU WALL JAMB SCHEDULE							
WALL THICKNESS	SPANNING CMU HEIGHT	OPENING WIDTH					
		≤ 3' - 0"		≤ 6' - 0"		≤ 10' - 0"	
		# OF CELLS	REINF.	# OF CELLS	REINF.	# OF CELLS	REINF.
6"	≤ 14' - 0"	1	GROUT	1	#4	1	#4
6"	≤ 18' - 0"	1	#4	1	#4	1	#5
8"	≤ 18' - 0"	1	GROUT	1	#4	1	#4
8"	≤ 24' - 0"	1	#4	1	#4	1	#5
12"	≤ 24' - 0"	1	#4	1	#5	1	#5
12"	≤ 36' - 0"	2	#4	2	#4	2	#6

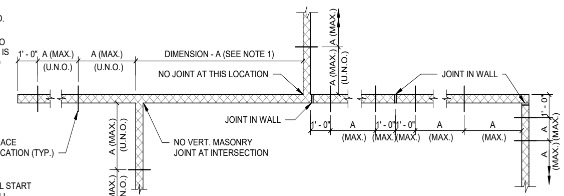

NOTES:
1. ALL INTERIOR CMU WALLS SHALL BE BRACED AT TOP IF DISTANCE BETWEEN INTERSECTING WALLS (DIMENSION- A) IS MORE THAN 26 TIMES THE WALL NOMINAL THICKNESS. THERE SHALL BE NO JOINT BETWEEN WALLS AT THE INTERSECTIONS OR IN BETWEEN THE INTERSECTING WALLS. THERE SHALL BE NO DOORS OR ANY OTHER OPENINGS LARGER THAN 24 INCHES WITHOUT JAMB REINFORCING, SEE SCHEDULE FOR LARGER OPENINGS. MINIMUM LENGTH OF INTERSECTING WALLS SHALL BE 4 FEET.
2. REINFORCE VERTICALLY SPANNING CMU WALLS AS FOLLOWS:

WALL THICKNESS	HEIGHT	VERTICAL REINFORCING
6"	≤14' - 0"	NONE
6"	14' - 0" TO 18' - 0"	#4 @ 48"
8"	≤18' - 0"	NONE
8"	18' - 0" TO 24' - 0"	#4 @ 48"
12"	≤24' - 0"	NONE
12"	24' - 0" TO 36' - 0"	#5 @ 48"

ALL REINFORCED CELLS SHALL BE GROUTED SOLID.

3. AT FOUNDATION, PROVIDE DOWELS TO MATCH SIZE AND SPACING OF VERTICAL BARS.
4. SEE TYPICAL DETAILS ON STRUCTURAL/ARCHITECTURAL DRAWINGS FOR BRACING REQUIREMENTS AT THE TOP OF CMU WALLS. THIS DETAIL SHALL APPLY IF SPECIFIC REINFORCING AND BRACING DETAILS ARE NOT SHOWN ON ARCHITECTURAL/STRUCTURAL DRAWINGS.
5. CONSULT WITH ARCHITECT/ENGINEER WHEN HEIGHT OF WALL EXCEEDS THE HEIGHT SHOWN ABOVE.
6. PROVIDE CONTINUOUS BOND BEAM AT THE TOP OF WALLS. REINFORCE BOND BEAMS WITH (2) - #4 FOR 6" WALLS & (2)-#5 FOR 8" & 12" WALLS, UNLESS NOTED OTHERWISE.
7. SEE GENERAL NOTES FOR ADDITIONAL INFORMATION.

TYPICAL DETAIL - NON-LOAD BEARING INTERIOR/CMU WALLS BRACING AND REINFORCING STEEL

9 SCALE: N.T.S.

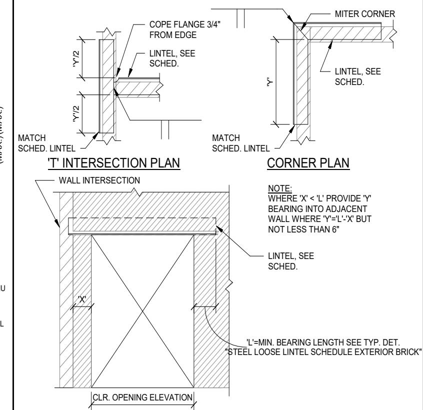

BRICK LOOSE LINTEL AT CORNER AND INTERSECTION

3 SCALE: N.T.S.

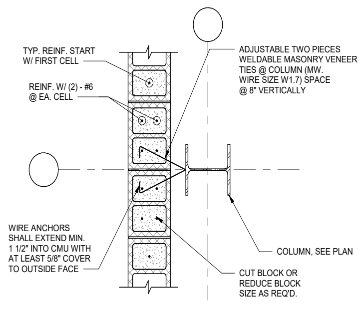

TYPICAL DETAIL STEEL COLUMN AT CMU WALL

11 SCALE: N.T.S.

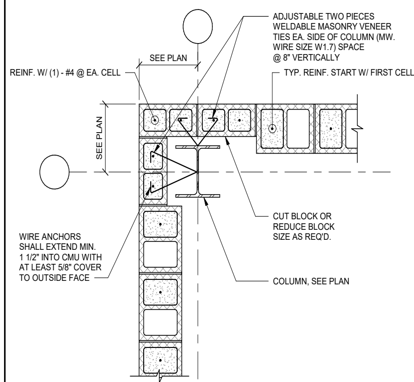

TYPICAL DETAIL STEEL COLUMN AT CMU WALL

8 SCALE: N.T.S.

CLEAR SPAN	REINFORCING REQUIREMENTS IN NOMINAL LINTEL SECTION								
	4x8	6x8	6x16	8x8	8x16	10x8	10x16	12x8	12x16
3-4	1-#3	1-#3	—	1-#3	—	2-#3	—	2-#3	—
4-0	1-#3	1-#4	—	2-#3	—	2-#3	—	2-#4	—
4-8	1-#4	1-#4	—	2-#4	—	2-#4	—	2-#4	—
5-4	1-#4	2-#4	—	2-#4	—	2-#4	2-#3	2-#5	—
6-0	1-#5	2-#4	1-#4	2-#4	2-#3	2-#5	2-#4	2-#5	2-#4
6-8	N/A	N/A	1-#5	N/A	2-#4	N/A	2-#4	2-#6	2-#4
7-4	↕	↕	1-#5	↕	2-#4	↕	2-#4	N/A	2-#5
8-0	↕	↕	1-#6	↕	2-#4	↕	2-#5	↕	2-#5
8-8	↕	↕	1-#6	↕	2-#5	↕	2-#5	↕	2-#6
9-4	N/A	N/A	1-#7	N/A	2-#5	N/A	2-#6	N/A	2-#6

NOTES:
1. SEE ARCHITECTURAL DRAWINGS FOR SIZE & LOCATION OF OPENINGS.
2. PROVIDE 1" OF BEARING AT EACH JAMB FOR EACH FOOT OF CLEAR SPAN BUT NOT LESS THAN 8". REINFORCEMENT SHALL PROJECT A MINIMUM OF 6" ONTO THE BEARING.
3. MINIMUM MASONRY COMPRESSIVE STRENGTH OF GROUTED PRISM F 'M = 2000 PSI.
4. LINTELS SCHEDULED AT 16" HIGH MAY BE EITHER TYPE "B" OR TYPE "C" AS DETAILED BELOW.
5. PRECAST CONCRETE LINTELS AS SHOWN MAY BE USED WITH ARCHITECT'S APPROVAL F ' C = 3000 PSI.

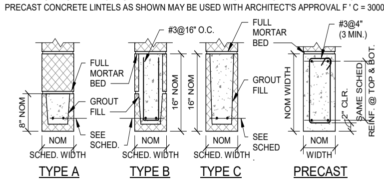

NON-LOAD BEARING BLOCK LINTEL SCHEDULE

5 SCALE: N.T.S.

CLEAR OPNG.	MINIMUM ANGLE SIZE
≤ 6'-0"	1 - L 3 1/2 x 'L' x 5/16
6'-8"	1 - L 4 x 'L' x 5/16
7'-4"	1 - L 5 x 'L' x 5/16
8'-0"	1 - L 6 x 'L' x 5/16
10'-0"	1 - L 6 x 'L' x 3/8
12'-0"	1 - L 8 x 'L' x 7/16 *

* 1/2" THK. ANGLE MAY ALSO BE USED

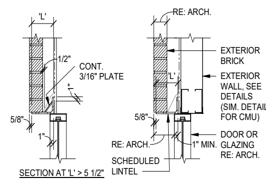

NOTES:
1. SEE ARCHITECTURAL DRAWINGS FOR SIZE AND LOCATION OF OPENINGS.
2. PROVIDE 1" OF BEARING AT EACH JAMB FOR EACH FOOT OF CLEAR SPAN BUT NOT LESS THAN 6".
3. WHERE MINIMUM BEARING CANNOT BE ACHIEVED, PROVIDE ADEQUATE CONNECTION TO ADJACENT STRUCTURAL MEMBERS OR PROVIDE SEPARATE VERTICAL SUPPORTS. SUBMIT SUCH DETAILS FOR THE ENGINEER'S APPROVAL.
4. ALL LINTELS SHALL BE HOT DIPPED GALVANIZED AFTER FABRICATION.
5. FOR MASONRY OPENINGS GREATER THAN 10'-0", SEE DETAILS ON THE DRAWINGS OR REFER TO ENGINEER.
6. BRICK HEIGHTS OVER OPENINGS GREATER THAN ONE HALF THE LINTEL SPAN SHALL BE SHORED UNTIL MORTAR HAS SET AND CURED.
7. 'L' DIMENSION SHALL NOT BE LESS THAN 4" FOR 'L' DIMENSION GREATER THAN 5 1/2". PROVIDE 3/16" PLATE STIFFENER.
8. WHERE MINIMUM ANGLE THICKNESS EXCEEDS GROUT BED THICKNESS. BOOT CUT BRICK AS REQ'D IN ORDER TO MAINTAIN LEVEL COURSING

TYPICAL DETAIL STEEL LOOSE LINTEL SCHEDULE EXTERIOR BRICK

2 SCALE: N.T.S.

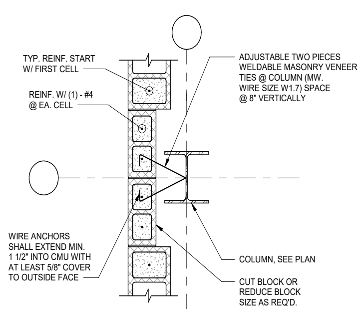

TYPICAL DETAIL STEEL COLUMN AT CMU WALL

10 SCALE: N.T.S.

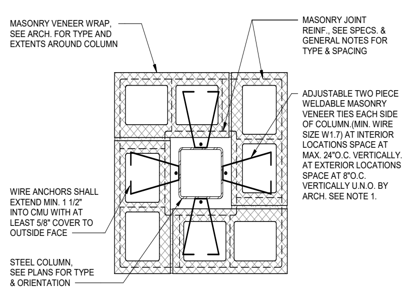

NOTES:
1. REDUCE ANCHOR SPACING OR PROVIDE DOUBLE ANCHORS AT EA. LOCATION AS REQ'D SO THAT THERE IS AT LEAST ONE ANCHOR FOR EACH 2.67 SQUARE FEET OF WALL AREA AT INTERIOR LOCATIONS & ONE ANCHOR FOR EACH 1.87 SQUARE FEET OF WALL AREA AT EXTERIOR LOCATIONS.
2. WHERE STUDS & SHEATHING ARE PROVIDED AROUND COLUMN, THIS DETAIL DOES NOT APPLY REFER TO ARCH. FOR DETAIL.
3. THIS DETAIL APPLIES AT BRICK CONCRETE & STONE MASONRY.

TYPICAL DETAIL MASONRY WRAP AT STEEL COLUMN

7 SCALE: N.T.S.

WALL THICKNESS	UNBRACED HEIGHT	VERTICAL REINFORCING
8"	14' - 0" MAX	#5 @ 32"
8"	18' - 0" MAX	#5 @ 24"
8"	20' - 0" MAX	2-#5 @ 32"
8"	25' - 0" MAX	2-#6 @ 16"
8"	30' - 0" MAX	2-#5 @ 8"

NOTES:
1. SEE GENERAL NOTES FOR ADDITIONAL INFORMATION.
2. ALL REINFORCING STEEL SHALL BE CONTINUOUS BETWEEN FOUNDATION AND TOP OF CMU. SPLICE REINFORCING PER GENERAL NOTES. ALL REINFORCED CELLS SHALL BE GROUTED SOLID.
3. AT FOUNDATION, PROVIDE DOWELS TO MATCH SIZE AND SPACING OF VERTICAL BARS.
4. CONSULT WITH ARCH./EOR WHEN HEIGHT OF WALL EXCEEDS THE HEIGHT SHOWN HERE.
5. PROVIDE CONTINUOUS BOND BEAMS AT THE TOP OF WALLS. REINFORCE BOND BEAMS WITH (2) - #5, UNLESS NOTED OTHERWISE.

TYPICAL DETAIL - EXTERIOR CMU WALL

4 SCALE: N.T.S.

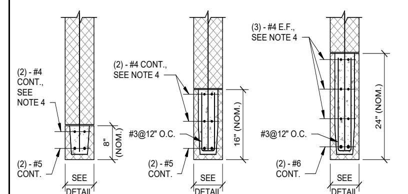

FOR OPENING LESS THAN 5' - 0" WIDE

FOR OPENING 5' - 0" TO 8' - 0" WIDE

FOR OPENING OVER 8' - 0" UP TO 14' - 6" WIDE

NOTES:
1. SEE ARCH. DRAWINGS FOR SIZE AND LOCATION OF OPENINGS.
2. PROVIDE 1" OF BEARING @ EACH JAMB FOR EACH FOOT OF CLEAR SPAN BUT NOT LESS THAN 8". REINF. SHALL PROJECT A MIN. OF 6" ONTO THE BEARING CMU.
3. BOND BEAMS SHALL BE FULLY GROUTED (2500 PSI @ 28 DAYS).
4. THE #4 BARS ARE ONLY REQUIRED AT EXTERIOR CMU WALLS.

TYPICAL DETAIL BLOCK LINTEL

1 SCALE: N.T.S.

PROFESSIONAL SEAL

Matrix Structural Engineers
TBPE Firm Registration No. F-2640

LOGO/CONTACT

MATRIX STRUCTURAL ENGINEERS
5177 Richmond Avenue, Suite 670
Houston, TX 77046-2401
Tel: 713.664.0130
Fax: 713.664.1370
MSE - 18135

DESIGN TEAM

Architectural
Martinez Architects

Civil Engineer
Maverick Engineering

Structural
Matrix Structural engineers

MEP
DBR

Landscaping
KDC Associates

FIRE STATION #11

CITY OF MIDLAND
Briarwood Ave & Golden Gate Dr
Midland, TX 79707

PROJECT No: MA 18017
DATE: 01/14/2020

ISSUE
100% DESIGN DEVELOPMENT 22-MAY-2019
75% CONSTRUCTION DOCUMENT 26-JUN-2019
100% ISSUE FOR PERMIT 30-JUL-2019
100% ISSUE FOR APPROVAL TO BID 16-JAN-2020

MASONRY DETAILS

S702

4.1437

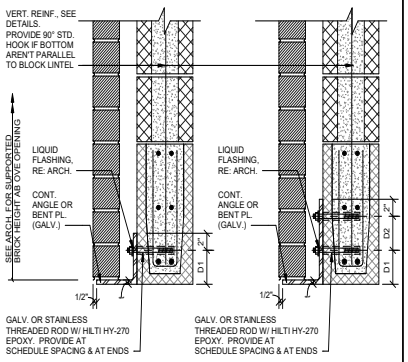

TYPE 1 **TYPE 2**

TYPE 1 SCHEDULE

MAX HEIGHT OF SUPPORTED BRICK	ANGLE	THREADED ROD			
	t	D1	DIA.	EMBEDMENT	SPACING
3'-0"	1/4"	4"	3/8"	3 3/8"	3'-0"
5'-0"	1/4"	4"	1/2"	4 1/2"	3'-0"
8'-0"	5/16"	5"	1/2"	4 1/2"	2'-6"
10'-0"	5/16"	5"	5/8"	5 5/8"	2'-0"
12'-0"	5/16"	5"	5/8"	5 5/8"	1'-4"

TYPE 2 SCHEDULE

MAX HEIGHT OF SUPPORTED BRICK	ANGLE	THREADED ROD				
	t	D1	D2	DIA.	EMBEDMENT	SPACING
10'-0"	5/16"	4"	4"	3/8"	3 3/8"	3'-0"
12'-0"	3/8"	4"	4"	1/2"	4 1/2"	3'-0"
15'-0"	3/8"	4"	4"	1/2"	4 1/2"	2'-6"
20'-0"	3/8"	4"	4"	5/8"	5 5/8"	2'-0"
25'-0"	3/8"	5"	4"	5/8"	5 5/8"	2'-0"
30'-0"	3/8"	5"	4"	5/8"	6 3/4"	1'-4"
35'-0"	7/16"	5"	4"	5/8"	6 3/4"	1'-4"

NOTES:
1. WHERE TWO SOLUTIONS ARE PROVIDED FOR A GIVEN HEIGHT, CONTRACTOR MAY CHOOSE BETWEEN TYPE 1 & TYPE 2.
2. MAX. HEIGHT OF SUPORTED BRICK SHALL BE FROM TOP OF OPENING TO TOP OF WALL UNLESS ANOTHER OPENING OF GHREATER OR EQUAL WIDTH IS PROVIDED ABOVE THE OPENING.
3. SEE TYPICAL DETAIL " ANGLE OR BENT PLATE SUBSTITUTION FOR OPTIONAL ALTERNATES.

TYPICAL DETAIL
SHELF ANGLE AT CMU

6 SCALE: 1 1/2" = 1'-0"

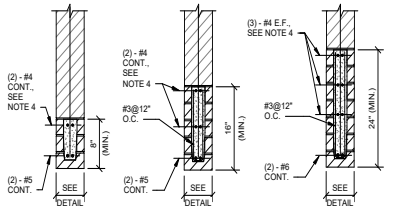

FOR OPENING LESS THAN 5' - 0" WIDE | FOR OPENING 5' - 0" TO 8' - 0" WIDE | FOR OPENING OVER 8' - 0" UP TO 14' - 6" WIDE

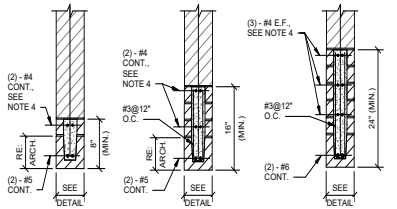

TYPICAL SOLDIER COURSE FOR OPENING LESS THAN 5' - 0" WIDE | TYPICAL SOLDIER COURSE FOR OPENING 5' - 0" T0 TO 8' - 0" WIDE | TYPICAL SOLDIER COURSE FOR OPENING FOR OPENING OVER 8' - 0" UP TO 14' - 6" WIDE

NOTES:
1. SEE ARCH. DRAWINGS FOR SIZE AND LOCATION OF OPENINGS.
2. PROVIDE 1" OF BEARING @ EACH JAMB FOR EACH FOOT OF CLEAR SPAN BUT NOT LESS THAN 8". REINF. SHALL PROJECT A MIN. OF 6" ONTO THE BEARING CMU.
3. BOND BEAMS SHALL BE FULLY GROUTED (2500 PSI @ 28 DAYS).
4. THE #4 BARS ARE ONLY REQUIRED AT EXTERIOR CMU WALLS.

TYPICAL DETAIL
BLOCK LINTEL AT CLAY MASONRY

2 SCALE:NTS

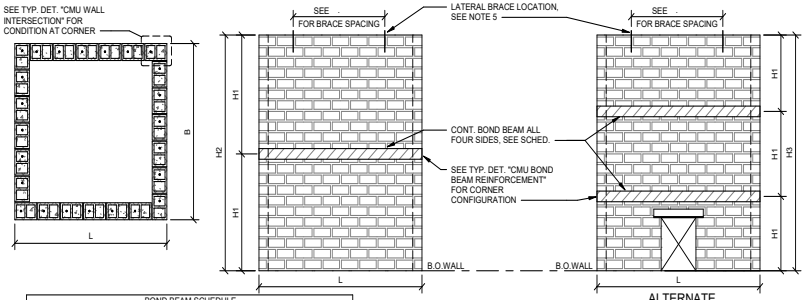

BOND BEAM SCHEDULE

L OR B	6" WALL		8" WALL		12" WALL	
	BEAM DEPTH	REINF.	BEAM DEPTH	REINF.	BEAM DEPTH	REINF.
8'	8"	(2)-#5B	8"	(2)-#5B	8"	(2)-#5B
10'	8"	(2)-#5B (2)-#5T	8"	(2)-#5B	8"	(2)-#5B
15'	16"	(2)-#5B (2)-#5M (2)-#5T	8"	(2)-#5B (2)-#5T	8"	(2)-#5B
18'	N/A	N/A	16"	(2)-#5B (2)-#5T	8"	(2)-#5B
24'	N/A	N/A	N/A	N/A	16"	(2)-#5B (2)-#5T

NOTES:
1. WHERE H EXCEEDS MAXIMUM SPECIFIED IN TYPICAL DETAIL " NON-LOAD BEARING INTERIOR CMU WALLS BRACING & REINFORCING STEEL " PROVIDE CONT. BOND BEAM AS SHOWN.
2. WHERE CONT. BOND BEAMS ARE USED, WALLS SHALL BE REINFORCED FOR HEIGHT = H1, OTHERWISE REINFORCE WALLS FOR HEIGHT = H2 OR H3
3. SEE TYP. DET. "BOND BEAM AT CONTROL JOINTS" WHERE CONTROL JOINTS INTERSECT BOND BEAM. BOND BEAM SHALL BE TREATED AS A FLOOR (DIAPHRAGM) LEVEL CONDITION
4. H2 SHALL NOT EXCEED 32'-0", H3 SHALL NOT EXCEED 48'-0".
5. IN LIEU OF INTERIOR BRACES AT THE TOP OF WALL CONTRACTOR MAY PROVIDE A BOND BEAM AT THE TOP OF WALL SIZED & REINFORCED PER THE SCHEDULE SHOWN.

TYPICAL DETAIL
TALL RECTANGULAR INTERIOR NON-LOAD BEARING CMU WALL BRACING

5 SCALE: 3/4" = 1'-0"

PROFESSIONAL SEAL
Matrix Structural Engineers
TBPE Firm Registration No. F-2640
STATE OF TEXAS
JAYNOOL A. KHAYRATTEE
68260
LICENSED PROFESSIONAL ENGINEER
01/14/2020

LOGO/CONTACT
MATRIX STRUCTURAL ENGINEERS
5177 Richmond Avenue, Suite 670
Houston, TX 77046-2401
Tel: 713.664.0133
Fax: 713.664.1370
MSE - 18135

DESIGN TEAM
Architectural
Martinez Architects
Civil Engineer
Maverick Engineering
Structural
Matrix Structural engineers
MEP
DBR
Landscaping
KDC Associates

FIRE STATION #11
CITY OF MIDLAND
Briarwood Ave & Golden Gate Dr
Midland, TX 79707

PROJECT No: **MA 18017**
DATE: **01/14/2020**

ISSUE
100% DESIGN DEVELOPMENT 22-MAY-2019
75% CONSTRUCTION DOCUMENT 26-JUN-2019
100% ISSUE FOR PERMIT 30-JUL-2019
100% ISSUE FOR APPROVAL TO BID 16-JAN-2020

MASONRY DETAILS

S703

4.1438

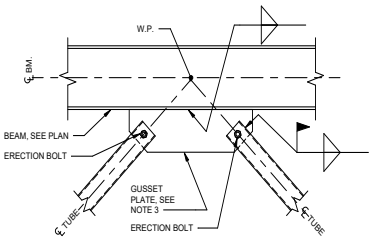

NOTES:
1. REFER TO BRACE ELEVATIONS FOR BRACE SIZES AND FORCES.
2. IF NOT PROVIDED, UNLESS NOTED OTHERWISE, THE BRACE FORCE SHALL BE THE MAXIMUM TENSION AND / OR COMPRESSION CAPACITY OF THE BRACE. IF BRACE FORCES ARE SHOWN, THEY ARE FACTORED LOADS (LRFD).
3. GUSSET PLATE SHALL BE CENTERED ON STEEL BEAM AND DESIGNED TO DEVELOP BRACE FORCE.
4. BOLTS AND WELDS SHALL BE DESIGNED BY THE FABRICATOR FOR THE VERTICAL AND HORIZONTAL COMPONENTS OF THE BRACE FORCE INCLUDING THE EFFECT OF ECCENTRICITY. THE MINIMUM SIZE FILLET WELD SHALL BE 1/4".

TYPICAL DETAIL
BRACE CONNECTION

12 SCALE: 3/4" = 1'-0"

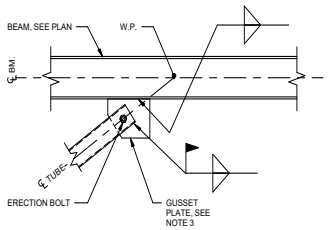

NOTES:
1. REFER TO BRACE ELEVATIONS FOR BRACE SIZES AND FORCES.
2. IF NOT PROVIDED, UNLESS NOTED OTHERWISE, THE BRACE FORCE SHALL BE THE MAXIMUM TENSION AND / OR COMPRESSION CAPACITY OF THE BRACE. IF BRACE FORCES ARE SHOWN, THEY ARE FACTORED LOADS (LRFD).
3. GUSSET PLATE SHALL BE CENTERED ON STEEL BEAM AND DESIGNED TO DEVELOP BRACE FORCE.
4. BOLTS AND WELDS SHALL BE DESIGNED BY THE FABRICATOR FOR THE VERTICAL AND HORIZONTAL COMPONENTS OF THE BRACE FORCE INCLUDING THE EFFECT OF ECCENTRICITY. THE MINIMUM SIZE FILLET WELD SHALL BE 1/4".

TYPICAL DETAIL
BRACE CONNECTION

11 SCALE: 3/4" = 1'-0"

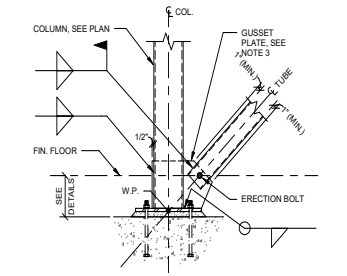

NOTES:
1. REFER TO BRACE ELEVATIONS FOR BRACE SIZES AND FORCES.
2. IF NOT PROVIDED, UNLESS NOTED OTHERWISE, THE BRACE FORCE SHALL BE THE MAXIMUM TENSION AND / OR COMPRESSION CAPACITY OF THE BRACE. IF BRACE FORCES ARE SHOWN, THEY ARE FACTORED LOADS (LRFD).
3. GUSSET PLATE SHALL BE CENTERED ON STEEL BEAM AND DESIGNED TO DEVELOP BRACE FORCE.
4. BOLTS AND WELDS SHALL BE DESIGNED BY THE FABRICATOR FOR THE VERTICAL AND HORIZONTAL COMPONENTS OF THE BRACE FORCE INCLUDING THE EFFECT OF ECCENTRICITY. THE MINIMUM SIZE FILLET WELD SHALL BE 1/4".

TYPICAL DETAIL
BRACE CONNECTION

10 SCALE: 3/4" = 1'-0"

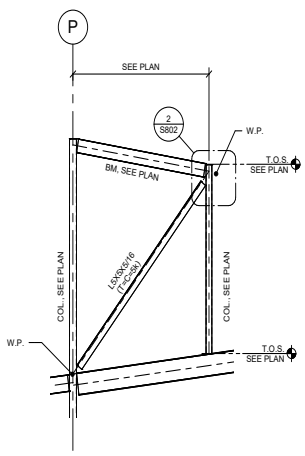

7 BRACE 'G'
SCALE: 1/4" = 1'-0"

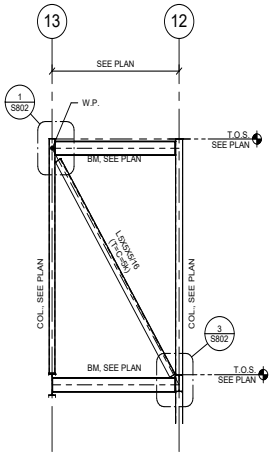

6 BRACE 'F'
SCALE: 1/4" = 1'-0"

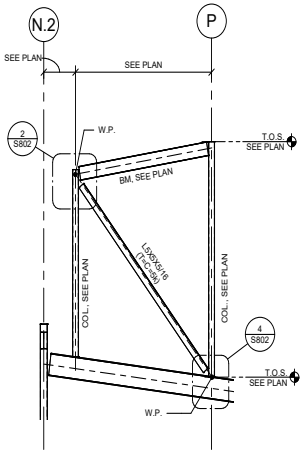

5 BRACE 'E'
SCALE: 1/4" = 1'-0"

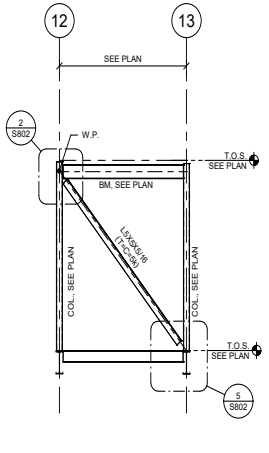

4 BRACE 'D'
SCALE: 1/4" = 1'-0"

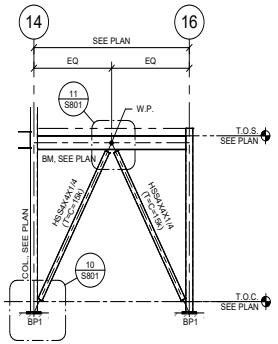

3 BRACE 'C'
SCALE: 1/4" = 1'-0"

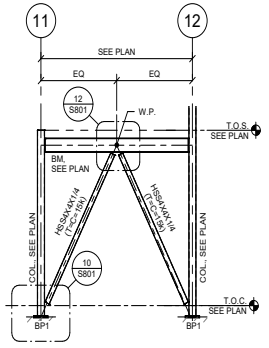

2 BRACE 'B'
SCALE: 1/4" = 1'-0"

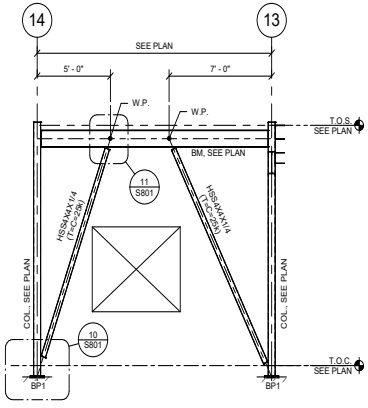

1 BRACE 'A'
SCALE: 1/4" = 1'-0"

PROFESSIONAL SEAL
Matrix Structural Engineers
TBPE Firm Registration No. F-2640

01/14/2020

LOGO/CONTACT

MATRIX STRUCTURAL ENGINEERS

5177 Richmond Avenue, Suite 670
Houston, TX 77056-2401
Tel: 713.664.0133
Fax: 713.664.1370
MSE - 18135

DESIGN TEAM

Architectural
Martinez Architects

Civil Engineer
Maverick Engineering

Structural
Matrix Structural engineers

MEP
DBR

Landscaping
KDC Associates

FIRE STATION #11
CITY OF MIDLAND
Briarwood Ave & Golden Gate Dr
Midland, TX 79707

PROJECT No: **MA 18017**
DATE: **01/14/2020**

ISSUE
100% DESIGN DEVELOPMENT 22-MAY-2019
75% CONSTRUCTION DOCUMENT 26-JUN-2019
100% ISSUE FOR PERMIT 30-JUL-2019
100% ISSUE FOR APPROVAL TO BID 16-JAN-2020

BRACE ELEVATIONS & DETAILS

S801

4.1439

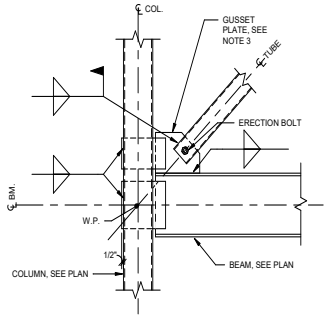

NOTES:
1. REFER TO BRACE ELEVATIONS FOR BRACE SIZES AND FORCES.
2. IF NOT PROVIDED, UNLESS NOTED OTHERWISE, THE BRACE FORCE SHALL BE THE MAXIMUM TENSION AND / OR COMPRESSION CAPACITY OF THE BRACE. IF BRACE FORCES ARE SHOWN, THEY ARE FACTORED LOADS (LRFD).
3. GUSSET PLATE SHALL BE CENTERED ON STEEL BEAM AND DESIGNED TO DEVELOP BRACE FORCE.
4. BOLTS AND WELDS SHALL BE DESIGNED BY THE FABRICATOR FOR THE VERTICAL AND HORIZONTAL COMPONENTS OF THE BRACE FORCE INCLUDING THE EFFECT OF ECCENTRICITY. THE MINIMUM SIZE FILLET WELD SHALL BE 1/4".

TYPICAL DETAIL
BRACE CONNECTION

3 SCALE: 3/4" = 1'-0"

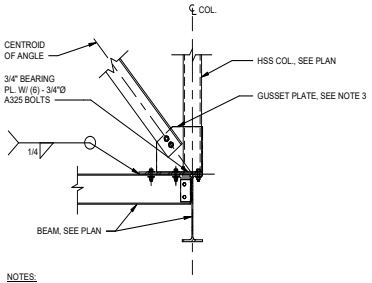

NOTES:
1. REFER TO BRACE ELEVATIONS FOR BRACE SIZES AND FORCES.
2. IF NOT PROVIDED, UNLESS NOTED OTHERWISE, THE BRACE FORCE SHALL BE THE MAXIMUM TENSION AND / OR COMPRESSION CAPACITY OF THE BRACE. IF BRACE FORCES ARE SHOWN, THEY ARE FACTORED LOADS (LRFD).
3. GUSSET PLATE SHALL BE CENTERED ON STEEL BEAM AND DESIGNED TO DEVELOP BRACE FORCE.
4. BOLTS AND WELDS SHALL BE DESIGNED BY THE FABRICATOR FOR THE VERTICAL AND HORIZONTAL COMPONENTS OF THE BRACE FORCE INCLUDING THE EFFECT OF ECCENTRICITY. THE MINIMUM SIZE FILLET WELD SHALL BE 1/4".

TYPICAL DETAIL
BRACE CONNECTION

5 SCALE: N.T.S.

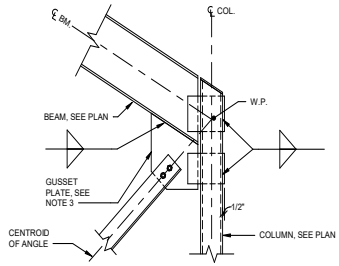

NOTES:
1. REFER TO BRACE ELEVATIONS FOR BRACE SIZES AND FORCES.
2. IF NOT PROVIDED, UNLESS NOTED OTHERWISE, THE BRACE FORCE SHALL BE THE MAXIMUM TENSION AND / OR COMPRESSION CAPACITY OF THE BRACE. IF BRACE FORCES ARE SHOWN, THEY ARE FACTORED LOADS (LRFD).
3. GUSSET PLATE SHALL BE CENTERED ON STEEL BEAM AND DESIGNED TO DEVELOP BRACE FORCE.
4. BOLTS AND WELDS SHALL BE DESIGNED BY THE FABRICATOR FOR THE VERTICAL AND HORIZONTAL COMPONENTS OF THE BRACE FORCE INCLUDING THE EFFECT OF ECCENTRICITY. THE MINIMUM SIZE FILLET WELD SHALL BE 1/4".

TYPICAL DETAIL
BRACE CONNECTION

2 SCALE: 3/4" = 1'-0"

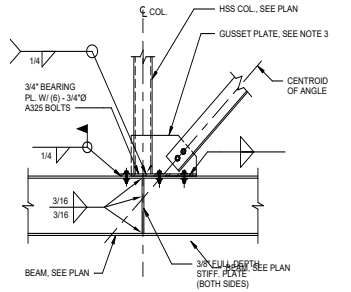

TYPICAL DETAIL
BRACE CONNECTION

4 SCALE: N.T.S.

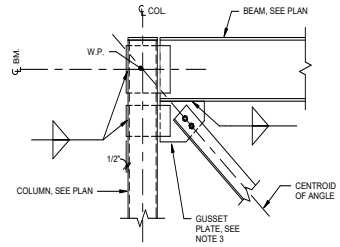

NOTES:
1. REFER TO BRACE ELEVATIONS FOR BRACE SIZES AND FORCES.
2. IF NOT PROVIDED, UNLESS NOTED OTHERWISE, THE BRACE FORCE SHALL BE THE MAXIMUM TENSION AND / OR COMPRESSION CAPACITY OF THE BRACE. IF BRACE FORCES ARE SHOWN, THEY ARE FACTORED LOADS (LRFD).
3. GUSSET PLATE SHALL BE CENTERED ON STEEL BEAM AND DESIGNED TO DEVELOP BRACE FORCE.
4. BOLTS AND WELDS SHALL BE DESIGNED BY THE FABRICATOR FOR THE VERTICAL AND HORIZONTAL COMPONENTS OF THE BRACE FORCE INCLUDING THE EFFECT OF ECCENTRICITY. THE MINIMUM SIZE FILLET WELD SHALL BE 1/4".

TYPICAL DETAIL
BRACE CONNECTION

1 SCALE: 3/4" = 1'-0"

4.1440

PROFESSIONAL SEAL

Matrix Structural Engineers
TBPE Firm Registration No. F-2640

01/14/2020

LOGO/CONTACT

MATRIX
STRUCTURAL
ENGINEERS

5177 Richmond Avenue, Suite 670
Houston, TX 77046-2401
Tel: 713.664.0135
Fax: 713.664.1370
MSE - 18135

DESIGN TEAM

Architectural
Martinez Architects

Civil Engineer
Maverick Engineering

Structural
Matrix Structural engineers

MEP
DBR

Landscaping
KDC Associates

FIRE STATION #11

CITY OF MIDLAND
Briarwood Ave & Golden Gate Dr
Midland, TX 79707

PROJECT No: **MA 18017**
DATE: **01/14/2020**

ISSUE

100% DESIGN DEVELOPMENT 22-MAY-2019
75% CONSTRUCTION DOCUMENT 26-JUN-2019
100% ISSUE FOR PERMIT 30-JUL-2019
100% ISSUE FOR APPROVAL TO BID 16-JAN-2020

BRACE DETAILS

S802

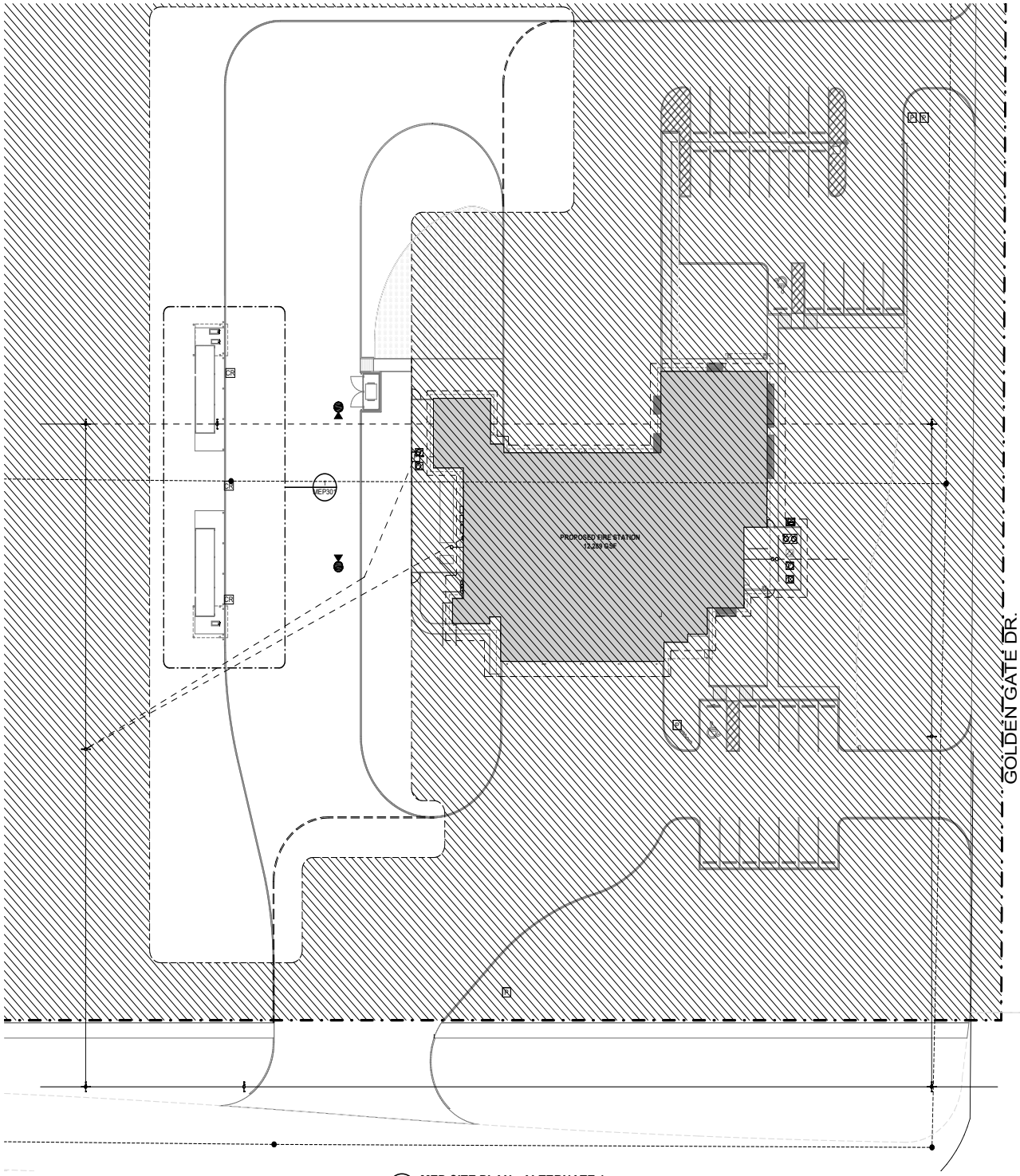

1 MEP101 **MEP SITE PLAN - ALTERNATE 1**
3/64" = 1'-0"

PROFESSIONAL SEAL

NOT FOR CONSTRUCTION OR PERMITTING; PRINTED FOR REVIEW ONLY
05/22/2019
M. JACQUELINE CHANG, P.E.
TEXAS #124987

LOGO/CONTACT

martinez ARCHITECTS

Martinez Architect, LP
900 Rockmead, Suite 250
Houston, Texas 77339
281.346.7371

DESIGN TEAM

Architectural
Martinez Architects

Civil Engineer
Maverick Engineering

Structural
Matrix Structural engineers

MIE/P/T
DBR

Landscape Architect
KDC Associates

Consultant 5 Discipline Type
Consultant 5 Name

FIRE STATION #11

CITY OF MIDLAND
6600 BRIARWOOD AVE
MIDLAND, TX 79707

PROJECT No: **MA 18017**
DATE: **01/14/2020**

ISSUE	Date	Description
100% DESIGN DEVELOPMENT	22-MAY-2019	
75% CONSTRUCTION DOCUMENT	26-JUN-2019	
100% ISSUE FOR PERMIT	30-JUL-2019	
100% ISSUE FOR APPROVAL TO BID	16-JAN-2020	

DBR
9601 McAllister Freeway, Suite 410
San Antonio, Texas 78216
210.546.0200 p
210.546.0201 f
TBPE Firm Registration No. 2234

DBR Project Number 196023.000

JC	BV	CL	WJ	MC

MEP SITE PLAN - ALTERNATE #1

MEP101.1

4.1441

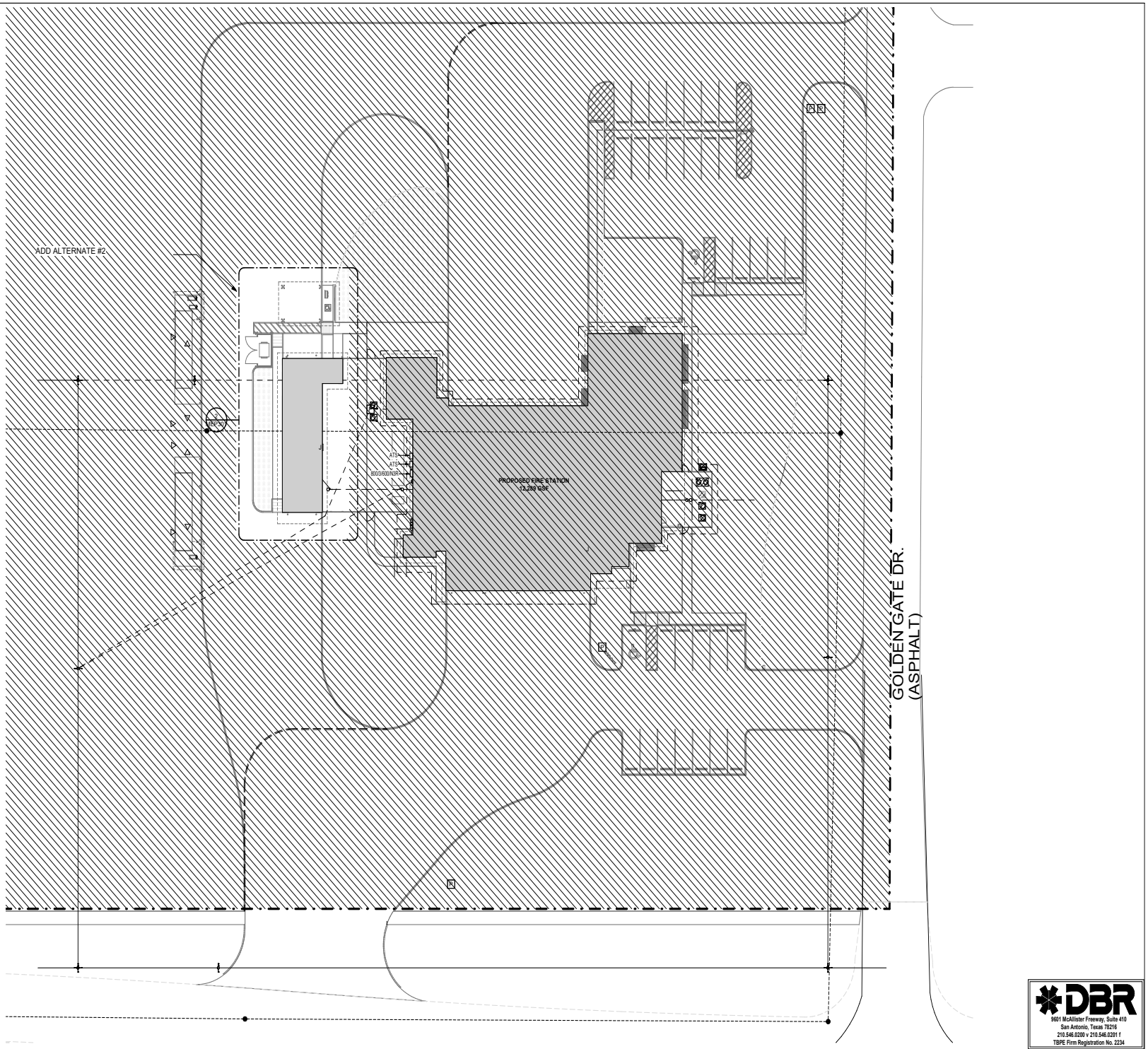

1 MEP SITE PLAN - ALTERNATE 2
MEP101.2 3/64" = 1'-0"

PROFESSIONAL SEAL

NOT FOR CONSTRUCTION OR PERMITTING; PRINTED FOR REVIEW ONLY
01/14/2020
M. JACQUELINE CHANG, P.E.
TEXAS #124987

martinez ARCHITECTS
Martinez Architect, LP
900 Rockmead, Suite 250
Houston, Texas 77339
281.346.7371

DESIGN TEAM

Architectural
Martinez Architects

Civil Engineer
Maverick Engineering

Structural
Matrix Structural engineers

MEP/FP/T
DBR

Landscape Architect
KDC Associates

Consultant 5 Discipline Type
Consultant 5 Name

FIRE STATION #11

CITY OF MIDLAND
6600 BRIARWOOD AVE
MIDLAND, TX 79707

PROJECT No: **MA 18017**
DATE: **01/14/2020**

ISSUE	Date	Description
100% DESIGN DEVELOPMENT	22-MAY-2019	
75% CONSTRUCTION DOCUMENT	26-JUN-2019	
100% ISSUE FOR PERMIT	30-JUL-2019	
100% ISSUE FOR APPROVAL TO BID	16-JAN-2020	

MEP SITE PLAN - ALTERNATE #2

MEP101.2

DBR
9601 McAllister Freeway, Suite 410
San Antonio, Texas 78216
210.546.0200 v 210.546.0201 f
TBPE Firm Registration No. 2234

DBR Project Number 196024.000

JC | BV | CL | WJ | MC

4.1442

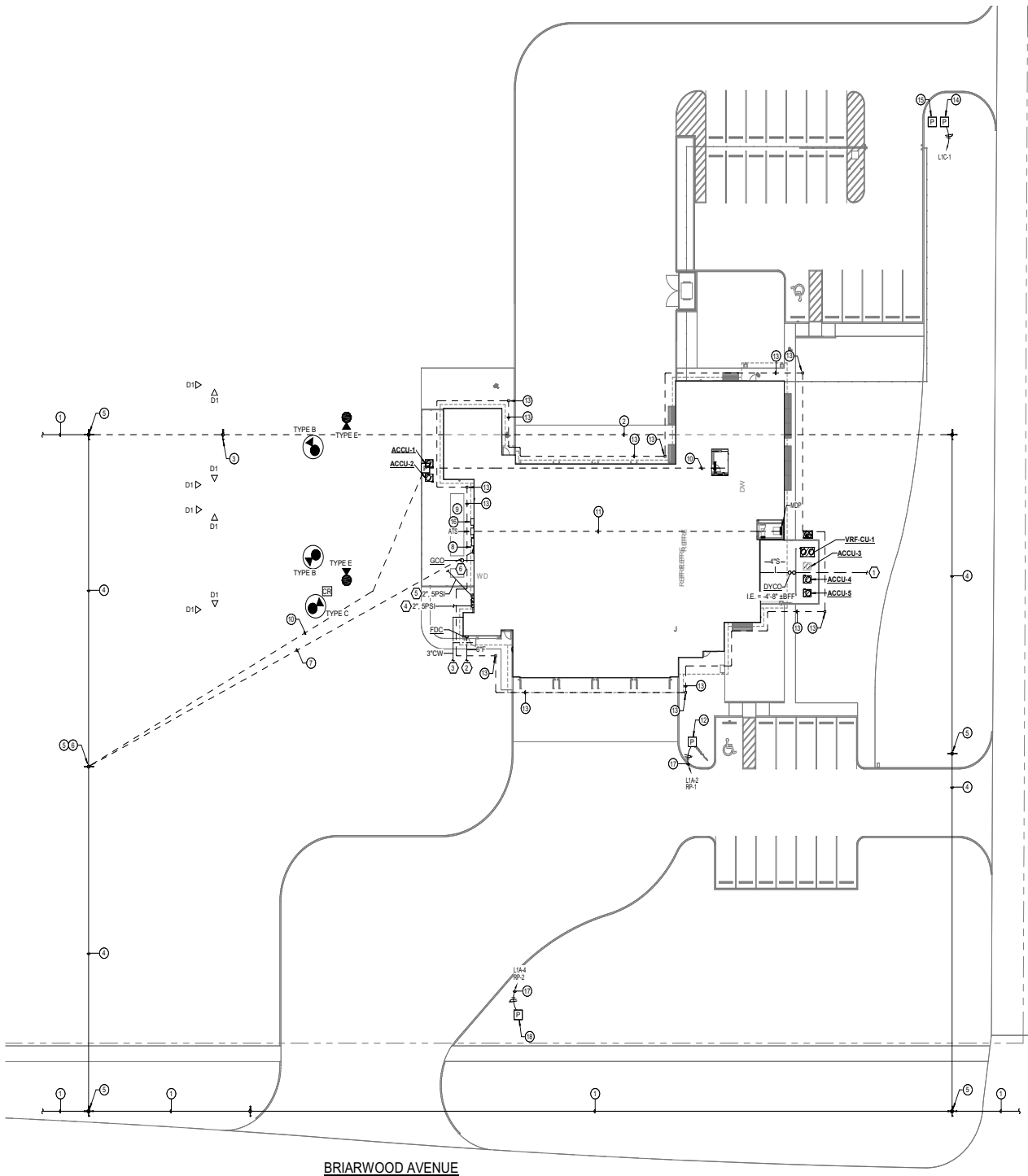

PLUMBING KEYED NOTES

1. 4" SANITARY. I.E.= -4'-8"± B.F.F. REFERENCE CIVIL DRAWINGS FOR CONTINUATION.
2. 6" FIRE LINE. REFERENCE CIVIL DRAWINGS FOR CONTINUATION.
3. 3" COLD WATER. REFERENCE CIVIL DRAWINGS FOR CONTINUATION.
4. 2", 5PSI GAS TO METER. REFERENCE CIVIL DRAWINGS FOR CONTINUATION.
5. 2", 5PSI GAS TO GENERATOR. REFERENCE MANUFACTURER'S DOCUMENTS FOR ROUTING AND CONNECTION POINT.
6. 4" SAND/OIL INV. EL. = -3'10" ±BFF. STUB UP TO GRADE CLEANOUT.

ELECTRICAL KEYED NOTES

1. EXISTING OVERHEAD ELECTRICAL PRIMARY.
2. EXISTING OVERHEAD ELECTRICAL PRIMARY TO BE REMOVED AND REDIRECTED AS INDICATED.
3. EXISTING UTILITY POWER POLE TO BE REMOVED.
4. PROPOSED NEW ROUTE FOR OVERHEAD ELECTRICAL PRIMARY AND NEW IN-LINE POWER POLES.
5. NEW UTILITY POWER POLE FOR OVERHEAD ELECTRICAL RE-ROUTE.
6. NEW POLE-MOUNTED 208V/3-PHASE TRANSFORMER BANK.
7. PROPOSED ROUTING OF NEW UNDERGROUND SECONDARY SERVICE LAERAL TO METER/MAIN SERVICE DISCONNECT.
8. PROPOSED LOCATION OF NEW C/T CAN, METER AND MAIN SERVICE DISCONNECT. REFER TO POWER PLAN AND ELECTRICAL ONE-LINE DIAGRAM FOR MORE INFORMATION.
9. PROPOSED LOCATION FOR 200KW NATURAL GAS GENERATOR. REFER TO ELECTRICAL ONE-LINE DIAGRAM FOR ADDITIONAL INFORMATION.
10. ROUTE (3)-4" UNDERGROUND CONDUITS WITH PULLSTRING FOR COMMUNICATION CABLING MAIN ENTRANCE UP TO IT ROOM 124. REFER TO SHEET TS201 FOR APPROXIMATE LOCATION OF STUB-UPS. COORDINATE EXACT LOCATION WITH DATA/COMMUNICATION EQUIPMENT PROVIDER.
11. PROPOSED ROUTING OF EMERGENCY FEEDER AND GENERATOR CONTROL WIRING. REFER TO ELECTRICAL ONE-LINE DIAGRAM ON SHEET E401 FOR ADDITIONAL INFORMATION.
12. PROVIDE POWER FOR FLAGPOLE LIGHTING. LIGHTING TO BE SELECTED BY ARCHITECT.
13. LIGHTNING PROTECTION UNDERGROUND LOOP. PROVIDE MINIMUM NUMBER OF ADDITIONAL GROUNDS AS REQUIRED. PROVIDE GROUND TEST WELLS FOR ALL GROUND RODS.
14. EXTEND 2#8, 1#10 GROUND IN 1" CONDUIT UNDERGROUND TO SECURITY GATE. COORDINATE EXACT LOCATION WITH OWNER/ARCHITECT.
15. EXTEND 1" CONDUIT UNDERGROUND IN SAME TRENCH AS POWER FOR SECURITY GATE CARD READER. COORDINATE EXACT LOCATION WITH OWNER/ARCHITECT.
16. GENERATOR DOCKING STATION. REFER TO ELECTRICAL ONE-LINE DIAGRAM FOR ADDITIONAL INFORMATION.
17. EXTEND CIRCUIT THROUGH LIGHTING RELAY PANEL 'RP' CONTROLLED BY PHOTOCELL AND TIMECLOCK. EXTERIOR LIGHTING SHALL BE PROGRAMMED ACCORDING TO IECC 2015. LIGHTING RELAY PANEL SHALL BE LOCATED NEXT TO ELECTRICAL PANEL SERVING EXTERIOR LIGHTING LOAD.
18. PROVIDE POWER TO MONUMENT SIGN. COORDINATE EXACT LOCATION WITH OWNER/ARCHITECT.

TRUE NORTH | PROJECT NORTH

1 MEP101 **MEP SITE PLAN - BASE BID**
3/64" = 1'-0"

DBR
9601 McAllister Freeway, Suite 410
San Antonio, Texas 78216
210.546.0200 v 210.546.0201 f
TBPE Firm Registration No. 2234

DBR Project Number 196024.000

JC | BV | CL | WJ | MC

PROFESSIONAL SEAL

NOT FOR CONSTRUCTION OR PERMITTING; PRINTED FOR REVIEW ONLY
01/14/2020
M. JACQUELINE CHANG, P.E.
TEXAS #124087

martinez ARCHITECTS
Martinez Architect, LP
900 Rockmead, Suite 250
Houston, Texas 77339
281.346.7371

DESIGN TEAM

Architectural
Martinez Architects

Civil Engineer
Maverick Engineering

Structural
Matrix Structural engineers

MEP/FP/T
DBR

Landscape Architect
KDC Associates

Consultant 5 Discipline Type
Consultant 5 Name

FIRE STATION #11

CITY OF MIDLAND
6600 BRIARWOOD AVE
MIDLAND, TX 79707

PROJECT No: MA 18017
DATE: 01/14/2020

ISSUE	Date	Description
100% DESIGN DEVELOPMENT	22-MAY-2019	
75% CONSTRUCTION DOCUMENT	26-JUN-2019	
100% ISSUE FOR PERMIT	30-JUL-2019	
100% ISSUE FOR APPROVAL TO BID	16-JAN-2020	

MEP SITE PLAN - BASE BID

MEP101

4.1443

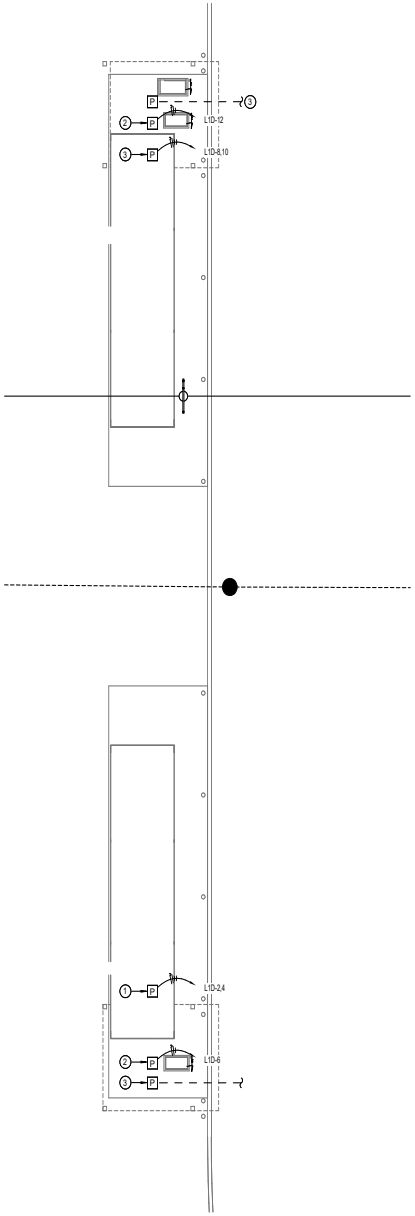

1 MEP301 **ENLARGED MEP SITE PLAN - ADD ALTERNATE 1**
1/8" = 1'-0"

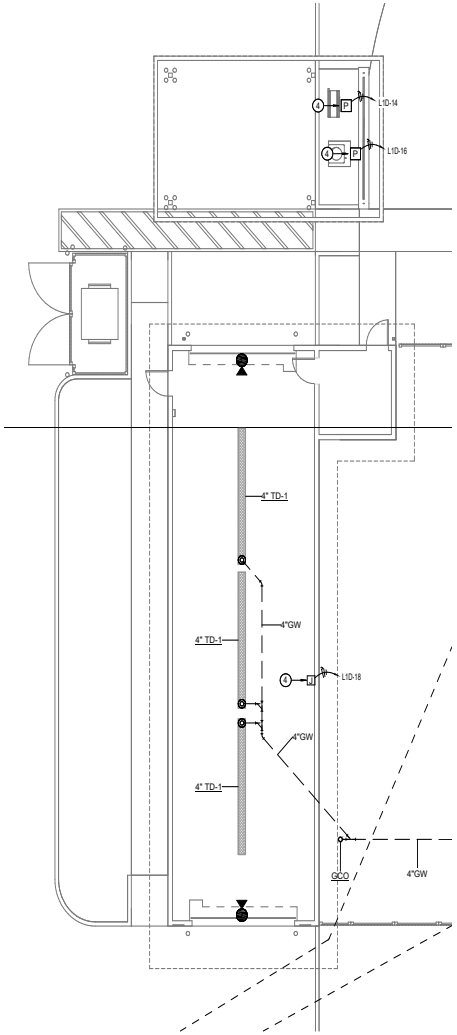

2 MEP301 **ENLARGED MEP SITE PLAN - ADD ALTERNATE 2**
1/8" = 1'-0"

ELECTRICAL KEYED NOTES

1. PROVIDE 208V/1-PHASE CIRCUIT FOR FUEL TANK SUBMERSIBLE PUMP AND EXTEND 2#8, 1#10 GROUND IN 1" CONDUIT UNDERGROUND TO ELECTRICAL PANEL INDICATED. COORDINATE EXACT LOCATION OF PUMP CONNECTION WITH FUEL STATION INSTALLER.
2. PROVIDE 120V/1-PHASE POWER TO FUEL PUMP MANAGEMENT SYSTEM AND EXTEND 2#8, 1#10 GROUND TO ELECTRICAL PANEL INDICATED. COORDINATE POWER STUB-UP WITH FUEL STATION INSTALLER.
3. EXTEND (2)-1" CONDUITS UNDERGROUND TO MDF ROOM FOR FUEL PUMP MANAGEMENT SYSTEM. COORDINATE CONDUIT STUB-UP WITH FUEL STATION INSTALLER. PROVIDE CONDUIT WITH NYLON PULL STRING AND INSULATED BUSHING.
4. EXTEND (2) SETS OF 2#8, 1#10 GROUND IN 1" CONDUIT UNDERGROUND TO WASH STATION VACCUUM AND AIR MACHINE. COORDINATE EXACT LOCATION OF STUB UP WITH OWNER/ARCHITECT. ROUTE POWER FOR FUEL STATIONS AND WASH STATION IN SAME UNDERGROUND TRENCH.
5. PROVIDE 120V/1-PHASE POWER TO WASH BAY CONTROLLER. COORDINATE EXACT LOCATION WITH WASH BAY INSTALLER.

DBR
9601 McAllister Freeway, Suite 410
San Antonio, Texas 78216
210.546.0200 v 210.546.0201 f
TBPE Firm Registration No. 2234

DBR Project Number 196024.000

JC	BV	CL	WJ	MC

PROFESSIONAL SEAL

NOT FOR CONSTRUCTION OR PERMITTING; PRINTED FOR REVIEW ONLY
01/14/2020
M. JACQUELINE CHANG, P.E.
TEXAS #124087

martinez ARCHITECTS
Martinez Architect, LP
900 Rockmead, Suite 250
Houston, Texas 77339
281.346.7371

DESIGN TEAM

Architectural
Martinez Architects

Civil Engineer
Maverick Engineering

Structural
Matrix Structural engineers

M/E/P/T
DBR

Landscape Architect
KDC Associates

Consultant 5 Discipline Type
Consultant 5 Name

FIRE STATION #11

CITY OF MIDLAND
6600 BRIARWOOD AVE
MIDLAND, TX 79707

PROJECT No: **MA 18017**
DATE: **01/14/2020**

ISSUE	Date	Description
100% DESIGN DEVELOPMENT	22-MAY-2019	
75% CONSTRUCTION DOCUMENT	26-JUN-2019	
100% ISSUE FOR PERMIT	30-JUL-2019	
100% ISSUE FOR APPROVAL TO BID	16-JAN-2020	

MEP SITE PLAN - ADD ALTERNATES 1 & 2

MEP301

4.1444

ABBREVIATIONS (NOT ALL ITEMS INDICATED APPLY TO THIS PROJECT)

A	
A	AIR (COMPRESSED)
ABV	ABOVE
A/C	AIR CONDITIONING
AC	ALTERNATING CURRENT AIR COMPRESSOR
ACCH	AIR COOLED CHILLER
ACCU	AIR COOLED CONDENSING UNIT
AD	ACCESS DOOR, AREA DRAIN
ADJ	ADJUSTABLE
AF	AIR FILTER
AFC	ABOVE FINISHED CEILING
AFF	ABOVE FINISHED FLOOR
AFG	ABOVE FINISHED GRADE
AHU	AIR HANDLING UNIT
AL	ALUMINUM
AMB	AMBIENT
AP	ACCESS PANEL
APD	AIR PRESSURE DROP
ARI	AMERICAN REFRIGERANT INSTITUTE
ARCH	ARCHITECT, ARCHITECTURAL
AS	AIR SEPARATOR
ASHRAE	AMERICAN SOCIETY OF HEATING AND REFRIGERATION ENGINEERS
ASME	AMERICAN SOCIETY OF MECHANICAL ENGINEERS
ASTM	AMERICAN SOCIETY OF TESTING AND MATERIALS
AV	ACID VENT, AIR VENT
AVG	AVERAGE
AWS	AMERICAN WELDING SOCIETY
AUX	AUXILIARY

B	
B	BOILER
BC	BELOW COUNTER
B/C	BACK OF CURB
BFV	BUTTERFLY VALVE
BH	BOX HYDRANT
BLDG	BUILDING
BM	BENCHMARK
BOF	BOTTOM OF FOOTING
BOS	BOTTOM OF STRUCTURE
BT	BATH TUB, BREAK TANK
BTU	BRITISH THERMAL UNIT
BV	BALL VALVE
BWV	BACK WATER VALVE

C	
C	CELSIUS
CAB	CABINET
CB	CATCH BASIN
CD	CONDENSATE DRAIN LINE
CFM	CUBIC FEET PER MINUTE
CFS	CUBIC FEET PER SECOND
CH	CHILLER
CHW	CHILLED WATER
CHP	CHILLED WATER PUMP
CHR	CHILLED WATER RETURN
CHS	CHILLED WATER SUPPLY
CI	CAST IRON
CIRC	CIRCULATING
CL	CENTERLINE
CLG	CEILING
CLR	CLEAR
CMP	CORRUGATED METAL PIPE
CMU	CONCRETE MASONRY UNIT
CPI	CAST IRON PIPE INSTITUTE
CPVC	CHLORINATED POLYVINYL CHLORIDE
CO	CLEAN OUT
COL	COLUMN
COMB	COMBINATION
COMP	COMPRESSOR
CON	CONVERTER
CONC	CONCRETE, CONCENTRIC
COND	CONDENSER, CONDENSATE
CONN	CONNECTION
CONT	CONTINOUS, CONTINUATION
CONTR	CONTROLLER, CONTRACTOR
CRAC	COMPUTER ROOM A/C UNIT
CRT	CATHODE RAY TUBE
CT	COOLING TOWER
CTR	CENTER
CU	COPPER
CW	COLD WATER
CWP	CONDENSER WATER PUMP
CWR	CONDENSER WATER RETURN
CWS	CONDENSER WATER SUPPLY

D	
D	DEPTH, DRAIN, DRYER
DB	DRY BULB
DC	DOUBLE DUCT CONSTANT VOLUME, DIRECT CURRENT
DDC	DIRECT DIGITAL CONTROL
DESIG	DESIGNATION
DTL	DETAIL
DF	DRINKING FOUNTAIN
DIA	DIAMETER
DIFF	DIFFUSER
DIM	DIMENSION
DISC	DISCONNECT
DN	DOWN
DPR	DAMPER
DS	DUCTLESS SPLIT SYSTEM
DSCU	DUCTLESS SPLIT CONDENSING UNIT
DW	DISHWASHER
DWG	DRAWING
DWH	DOMESTIC WATER HEATER
DWP	DOMESTIC WATER PUMP
DX	DIRECT EXPANSION

E	
EA	EACH
EAT	ENTERING AIR TEMPERATURE
EC	ELECTRICAL CONTRACTOR
ECC	ECCENTRIC
EDB	ENTERING DRY BULB
EDF	ELECTRIC DRINKING FOUNTAIN
EDH	ELECTRIC DUCT HEATER
EF	EXHAUST FAN
EFS	EXHAUST FAN SCIENCE
EFH	EXHAUST FAN HOOD
EFF	EFFICIENCY
EJ	EXPANSION JOINT
EL	ELEVATION
ELEC	ELECTRICAL
ELEV	ELEVATOR EMERGENCY ENCLOSURE
EMERG	EMERGENCY
ENCL	ENCLOSURE
ENGR	ENGINEER
EQ	EQUAL
EQUIP	EQUIPMENT
ERU	ENERGY RECOVERY UNIT
ES	END SUCTION, EMERGENCY SHOWER
ESP	EXTERNAL STATIC PRESSURE EXPANSION TANK
ET	EXPANSION TANK
ETR	EXISTING TO REMAIN
EVAP	EVAPORATOR
EWB	ENTERING WET BULB
EWT	ENTERING WATER TEMPERATURE
EX	EXPLOSION-PROOF
EXT	EXTERNAL
EXTG	EXISTING

F	
F	FAHRENHEIT, FIRE
FBO	FURNISHED BY OTHERS
FCO	FLOOR CLEAN OUT
FCS	FLOOR CONTROL STATION
FCU	FAN COIL UNIT
FD	FLOOR DRAIN, FIRE DAMPER
FDS	FIRE DEPARTMENT SIAMESE
FDV	FIRE DEPARTMENT VALVE
FH	FIRE HYDRANT
FHC	FIRE HOSE CABINET
FHR	FIRE HOSE RACK
FIXT	FIXTURE
FLA	FULL LOAD AMPS
FLEX	FLEXIBLE
FL	FLOW LINES
FLR	FLOOR
FP	FIRE PUMP
FPT	FAN POWERED TERMINAL
FRZR	FREEZER
FS	FLOW SWITCH, FIRE SPRINKLER
FSK	FLOOR SINK
FT	FOOT, FEET
FUT	FUTURE

G	
G	GAS
GA	GAUGE
GAL	GALLON
GALV	GALVANIZED
GC	GENERAL CONTRACTOR
GLV	GLOBE VALVE
GND	GROUND
GPD	GALLONS PER DAY
GPH	GALLONS PER HOUR
GPM	GALLONS PER MINUTE

H	
HB	HOSE BIBB
HD	HEAD, HUB DRAIN
HE	HEAT EXCHANGER
HF	HUMIDIFIER
HORIZ	HORIZONTAL
HP	HORSEPOWER, HALON PANEL
HPU	HEAT PUMP UNIT
HKP	HOUSEKEEPING PAD
HSC	HORIZONTAL SPLIT CASE
HSTAT	HUMIDISTAT
HT	HEIGHT
HTG	HEATING
HTR	HEATER
HW	HOT WATER
HWC	HOT WATER CIRCULATOR
HWP	HEATING WATER PUMP
HWR	HOT WATER RETURN
HWS	HOT WATER SUPPLY
HZ	HERTZ

I	
IAH	INTAKE AIR HOOD
ID	INSIDE DIAMETER
IE	INVERT ELEVATION
IH	INFRARED HEATER
IN	INCH
INSUL	INSULATION
INT	INTERNAL, INTERIOR
IW	INDIRECT WASTE

J	
JB	JUNCTION BOX
JP	JOCKEY PUMP

K	
KEC	KITCHEN EQUIPMENT CONTRACTOR
KEF	KITCHEN EXHAUST FAN
KSF	KITCHEN SUPPLY FAN
KO	KNOCKOUT
KVA	KILOVOLT- AMPS
KW	KILOWATT

L	
L	LENGTH, LAVATORY
LAT	LEAVING AIR TEMPERATURE
LAV	LAVATORY
LF	LINEAR FEET
LP	LOW PRESSURE
LRA	LOCKED ROTOR AMPS
LVL	LEVEL
LWB	LEAVING WET BULB
LWCO	LOW WATER CUT OFF
LWT	LEAVING WATER TEMPERATURE

M	
MAT	MIXED AIR TEMPERATURE
MAX	MAXIMUM
MBTUH	THOUSAND OF BTU'S
MC	MECHANICAL CONTRACTOR
MECH	MECHANICAL
MFR	MANUFACTURER
MH	MANHOLE
MI	MALLEABLE IRON
MIN	MINIMUM
MP	MEDIUM PRESSURE
MS	MOP SINK
MTD	MOUNTED
MU	MAKE-UP
MVD	MANUAL VOLUME DAMPER

N	
N.C.	NORMALLY CLOSED
NFPA	NATIONAL FIRE PROTECTION ASSOCIATION
NIC	NOT IN CONTRACT
N.O.	NORMALLY OPEN
NO.	NUMBER
NTS	NOT TO SCALE

O	
OA	OUTSIDE AIR
OAF	OUTSIDE AIR FAN
OAHU	OUTSIDE AIR HANDLING UNIT
OAH	OUTSIDE AIR INTAKE HOOD
OBD	OPPOSED BLADE DAMPER
OC	ON CENTER
OD	OUTSIDE DIAMETER, OVERFLOW DRAIN
OFCU	OUTSIDE AIR FAN COIL UNIT
OPG	OPENING
OS&Y	OPEN STEM AND YOLK

P	
P	PUMP, PLUMBING EQUIPMENT
PC	PLUMBING CONTRACTOR
PCR	PUMPED CONDENSATE RETURN
PD	PRESSURE DROP, PLANTER DRAIN
PH	PHASE, POST HYDRANT
PIV	POST INDICATOR VALVE
PLBG	PLUMBING
PNEU	PNEUMATIC
PNL	PANEL
PNTH	PENTHOUSE
PP	POLYPROPYLENE
PPM	PART PER MILLION
PRI	PRIMARY
PRS	PRESSURE REDUCING STATION
PRV	PRESSURE REDUCING VALVE
PSF	POUNDS PER SQUARE FOOT
PSI	POUNDS PER SQUARE INCH
PSIG	POUNDS PER SQUARE INCH GAUGE
PT	PLUMBING TRIM
PV	PLUG VALVE
PVC	POLYVINYL CHLORIDE

Q	
QTY	QUANTITY

R	
RA	RETURN AIR
RAD	REFRIGERATED AIR DRYER
RAF	RETURN AIR FAN
RAG	RETURN AIR GRILL
RAH	RELIEF AIR HOOD
RAT	RETURN AIR TEMPERATURE
RCP	REFLECTED CEILING PLAN, REINFORCED CONCRETE PIPE
RD	ROOF DRAIN
RE	REFERENCE, REFER
RECIRC	RECIRCULATE
RED	REDUCER
REFR	REFRIGERATOR
REG	REGISTER
REINF	REINFORCING
REV	REVISION, REVISE
RH	RELATIVE HUMIDITY
RHG	REFRIGERANT HOT GAS
RKVA	RUNNING KILOVOLT-AMPS
RKW	RUNNING KILOWATTS
RL	REFRIGERANT LIQUID
RLA	RUNNING LOAD AMPS
RM	ROOM, REFRIGERATION MACHINE
RPM	REVOLUTIONS PER MINUTE
RS	REFRIGERANT SUCTION
RTU	ROOFTOP UNIT
RV	RELIEF VALVE

S	
S	STEAM
SA	SUPPLY AIR
SAF	SUPPLY AIR FAN
SAG	SUPPLY AIR GRILLE
SAN	SANITARY SEWER
SAR	SUPPLY AIR REGISTER
SC	STEAM CONDENSATE
SCHED	SCHEDULED
SCHP	SECONDARY CHILLED WATER PUMP
SCR	SILICON CONTROLLED RECTIFIER
SD	STORM DRAIN
SE	SEWAGE EJECTOR
SEC	SECONDARY
SECT	SECTION
SENS	SENSIBLE
SF	SQUARE FEET
SFCS	SPRINKLER FLOOR CONTROL STATION
SH	SHOWER
SHT	SHEET
SIM	SIMILAR
SK	SINK
SKVA	STARTING KILOVOLTSAMPS
SMW	SHEETMETAL
SP	SUMP PUMP, STATIC PRESSURE
SPEC	SPECIFICATION
SPR	SPRINKLER
SQ	SQUARE
SS	SERVICE SINK
SSD	SUBSURFACE DRAIN
SSFU	SANITARY SEWER FIXTURE UNITS
SSSC	SOLID STATE SPEED CONTROL
ST	STORAGE TANKS
STD	STANDARD
STL	STEEL

T	
TC	TEMPERATURE CONTROL
TCC	TEMPERATURE CONTROL COMPRESSOR
TD	TRENCH DRAIN
TF	TRANSFER FAN
TDH	TOTAL DYNAMIC HEAD
TH BLK	THRUST BLOCK
TP	TRAP PRIMER
TPD	TRAP PRIMER DEVICE
TSP	TOTAL STATIC PRESSURE
TSTAT	THERMOSTAT
TYP	TYPICAL

U	
U	URINAL
UCD	UNDER CUT DOOR
UG	UNDERGROUND
UH	UNIT HEATER
UL	UNDERWRITERS LABORATORIES, INC.
UNO	UNLESS NOTED OTHERWISE
U/F	UNDERFLOOR
U/S	UNDERSLAB

V	
V	VOLT, VENT
VA	VOLT- AMPERE
VAC	VACUUM
VAV	VARIABLE AIR VOLUME
VB	VALVE BOX, VACUUM BREAKER
VCP	VITRIFIED CLAY PIPE
VD	VOLUME DAMPER
VEL	VELOCITY
VERT	VERTICAL
VFD	VARIABLE FREQUENCY DRIVE
VIB	VALVE IN BOX
VOV	VALVE ON VERTICAL
VP	VACUUM PUMP
VR	VARIABLE AIR VOLUME REHEAT
VTR	VENT THRU ROOF

W	
W	WATT, WASTE, WIDTH, WASHER
W/	WITH
W/O	WITHOUT
WB	WET BULB
WC	WATER CLOSET
WCO	WALL CLEAN OUT
WH	WALL HYDRANT
WM	WATER METER
WP	WEATHERPROOF
WPD	WATER PRESSURE DROP
WWF	WELDED WIRE FABRIC

DUCTWORK

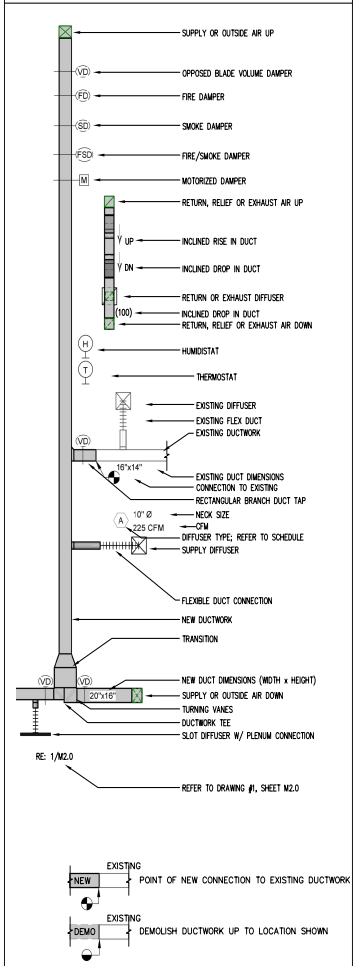

GENERAL NOTES: (APPLY TO ALL SHEETS)

1. CONTRACTOR SHALL COMPLY WITH ALL STATE, LOCAL, AND FEDERAL CODES AND AUTHORITIES HAVING JURISDICTION.
2. IT IS THE CONTRACTOR'S RESPONSIBILITY TO HAVE VERIFIED EXISTING JOBSITE CONDITIONS DURING THE BIDDING PERIOD, SO HE WILL HAVE OBTAINED THE SCOPE OF MECHANICAL WORK INVOLVED. THE SCOPE OF THE WORK SHALL INCLUDE MATERIALS AND DUCTWORK CONSISTING OF DEVICES, EQUIPMENT OR APPARATUS WHICH MUST BE REROUTED, RELOCATED OR REMOVED EITHER TEMPORARILY OR PERMANENTLY, OR WHICH MUST BE PROVIDED SO THAT THE INDICATED REMODELING MAY BE ACCOMPLISHED. NOT ALL EXISTING CONDITIONS ARE NECESSARILY INDICATED ON THE DRAWINGS.
3. CONTRACTOR SHALL COORDINATE WITH STRUCTURAL CONDITIONS AT THE SITE AND PROVIDE ALL REQUIRED CLEARANCES.
4. CONTRACTOR SHALL COORDINATE WITH ELECTRICAL CONTRACTOR FOR ALL ELECTRICAL POWER REQUIREMENTS.
5. CONTRACTOR SHALL PROVIDE U.L. LISTED FIRE CAULK SEALANT AT ALL PIPING PENETRATIONS THROUGH FIRE RATED WALLS.
6. DUCT SIZES SHOWN ON PLANS ARE CLEAR INSIDE DIMENSIONS.
7. CONTRACTOR SHALL PROVIDE ALL NECESSARY TESTING AND BALANCING FOR THIS PROJECT. REFER TO DIV.23 SPECIFICATIONS.
8. MECHANICAL CONTRACTOR SHALL COORDINATE WITH ALL OTHER TRADES FOR THE SYSTEM TO MEET DESIGN INTENT.
9. MECHANICAL EQUIPMENT, DUCTWORK, PIPING AND ACCESSORIES SHALL NOT BE ROUTED DIRECTLY OVER ELECTRICAL EQUIPMENT. COORDINATE WITH ELECTRICAL CONTRACTOR FOR ALL REQUIRED CLEARANCES PRIOR TO INSTALLATION.
10. PROVIDE INSULATED ACCESS DOORS FOR DUCTWORK DOWNSTREAM OF AIR HANDLING UNITS AT EVERY 20'-0" TO FACILITATE DUCT CLEANING. PROVIDE ACCESS DOORS WITHIN 5'-0" OF EACH ELBOW.
11. PROVIDE RECTANGULAR BRANCH TAP FOR ALL RECTANGULAR DUCT CONNECTIONS TO RECTANGULAR DUCT TRUNKS. RE: DETAIL 2/M601.
12. PROVIDE REMOTE SPIN-IN DAMPER OPERATOR FOR SPIN-IN CONNECTIONS AND VOLUME DAMPERS LOCATED OVER GYPSUM CEILINGS. RE: DETAIL 4/M601.
13. THERMOSTAT SHALL HAVE CAPABILITY TO SET BACK OR SHUT DOWN THE SYSTEM BASED ON DAY OF THE WEEK AND THE TIME OF THE DAY, AND PROVIDE A READILY ACCESSIBLE MANUAL OVERRIDE THAT WILL RETURN TO THE PRESETBACK OR SHUTDOWN SCHEDULE WITHOUT REPROGRAMMING.
14. ZONE THERMOSTAT CONTROL SHALL PROVIDE A TEMPERATURE RANGE OR DEADBAND OF AT LEAST 5°F WITHIN WHICH THE SUPPLY OF HEATING AND COOLING ENERGY TO THE ZONE IS CAPABLE OF BEING SHUT OFF OR REDUCED TO A MINIMUM.
15. CONTRACTOR SHALL PROVIDE ACCESS PANEL FOR MAINTENANCE OF EXHAUST FANS AND ELECTRICAL COMPONENTS ASSOCIATED WITH ALL FCU'S. ACCESS PANEL SHALL BE LOCATED ABOVE THE CEILING AND SHALL BE FIRE RATED TO MATCH WALL CONSTRUCTION. FIELD COORDINATE EXACT LOCATION OF ACCESS PANEL PRIOR TO INSTALLATION. COORDINATE WITH MANUFACTURER'S SPECS FOR SIZE OF ACCESS PANEL.

DBR
9601 McAllister Freeway, Suite 410
San Antonio, Texas 78216
210.546.0200 v 210.546.0201 f
TBPE Firm Registration NO. 2234

DBR Project Number 196024.000

JC	BV	CL	WJ	MC

PROFESSIONAL SEAL

NOT FOR CONSTRUCTION OR PERMITTING; PRINTED FOR REVIEW ONLY
01/14/2020
M. JACQUELINE CHANG, P.E.
TEXAS #124697

martinez ARCHITECTS
Martinez Architect, LP
900 Rockmead, Suite 250
Houston, Texas 77339
281.346.7371

DESIGN TEAM

Architectural
Martinez Architects

Civil Engineer
Consultant 1 Name

Structural
Matrix Structural Engineers

MEP
DBR

Landscaping
KDC Associates

FIRE STATION #11
CITY OF MIDLAND
Briarwood Ave & Golden Gate Dr
Midland, TX 79707

PROJECT No: MA 18017
DATE: 01/14/2020

ISSUE	Date	Descrlption
100% DESIGN DEVELOPMENT	22-MAY-2019	
75% CONSTRUCTION DOCUMENT	26-JUN-2019	
100% ISSUE FOR PERMIT	30-JUL-2019	
100% ISSUE FOR APPROVAL TO BID	16-JAN-2020	

MECHANICAL SYMBOLS AND ABBREVIATIONS

M001

4.1445

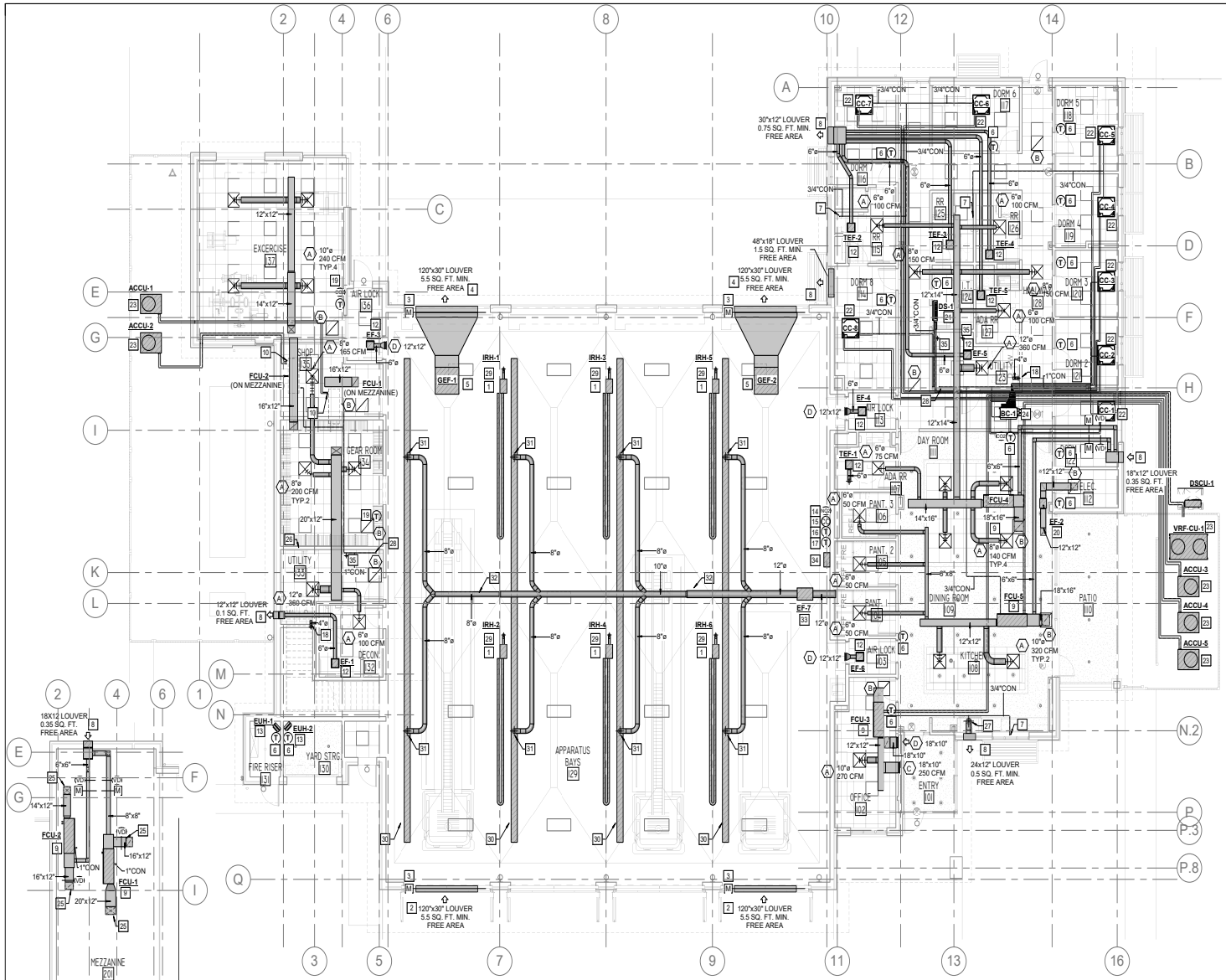

1 LEVEL 1 MECHANICAL PLAN
M201 — 1/8" = 1'-0"

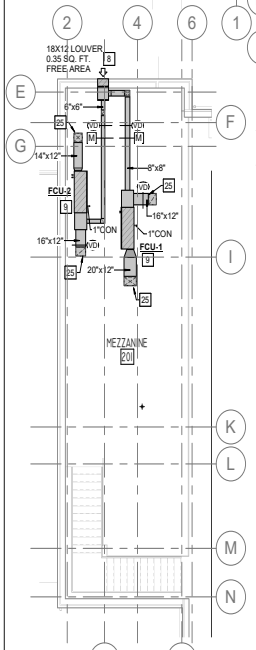

2 MEZZANINE MECHANICAL PLAN
M201 — 1/8" = 1'-0"

MECHANICAL KEYED NOTES:

1. PROVIDE GAS INFRARED HEATER AT APPROXIMATE LOCATION. MOUNT HEATER AS HIGH AS POSSIBLE BELOW STRUCTURE. COORDINATE EXACT LOCATION WITH ARCHITECT TO AVOID CONFLICT. ROUTE 4" ROUND FLUE FROM HEATER UP THROUGH ROOF AND TERMINATE 3'-0" ABOVE ROOF WITH ROOF CAP. SLOPE OF FLUE SHALL NOT BE MORE THAN 45° FROM VERTICAL. RE: DETAILS 15&16/M601.
2. PROVIDE RUSKIN ELF375DX INTAKE AIR LOUVER WITH A FREE AREA AS INDICATED. COORDINATE EXACT LOUVER DIMENSIONS, LOCATION, AND FINISH WITH ARCHITECT. INTAKE LOUVER SHALL BE PROVIDED WITH A MINIMUM OF 18" DEEP PLENUM, FULL SIZE IN WIDTH AND HEIGHT OF LOUVER UNLESS NOTED OTHERWISE. INTAKE LOUVER SHALL BE INSTALLED A MINIMUM OF 10'-0" FROM EXHAUST OUT OF BUILDING. RE: 18/M601.
3. INTERLOCK MOTORIZED DAMPER WITH ASSOCIATED EXHAUST FANS SUCH THAT DAMPER SHALL BE OPEN WHEN FANS ARE ENERGIZED AND SHUT WHEN FANS ARE DE-ENERGIZED.
4. PROVIDE RUSKIN ELF375DX EXHAUST AIR LOUVER WITH DIMENSIONS AND FREE AREA AS INDICATED. EXHAUST LOUVER SHALL BE PROVIDED WITH A MINIMUM OF 18" DEEP PLENUM, FULL SIZE IN WIDTH AND HEIGHT OF LOUVER UNLESS NOTED OTHERWISE. RE: 6/M403.
5. PROVIDE INLINE EXHAUST FAN AS SCHEDULED, AT APPROXIMATE LOCATION. INSTALL PER MANUFACTURER SPECIFICATION. COORDINATE EXACT LOCATION WITH ARCHITECT. PROVIDE TRANSITIONS AS REQUIRED. COVER INLET OF FAN WITH HARDWARE CLOTH. RE: DETAIL 9/M601.
6. LOCATE THERMOSTAT AS SHOWN. MOUNT AT SAME ELEVATION AS LIGHT SWITCHES. COORDINATE EXACT LOCATION WITH ARCHITECT.
7. ROUTE CONDENSATE TO FLOOR DRAIN/TAILPIECE AT LOCATION SHOWN. REFER TO PLUMBING FOR EXACT LOCATION. UNLESS NOTED OTHERWISE, SIZE CONDENSATE PER MANUFACTURER'S RECOMMENDATION. RE: DETAIL 7/M601.
8. PROVIDE RUSKIN ELF375DX INTAKE/EXHAUST AIR LOUVER WITH DIMENSIONS AND FREE AREA AS INDICATED. EXHAUST LOUVER SHALL BE PROVIDED WITH A MINIMUM OF 18" DEEP PLENUM, FULL SIZE IN WIDTH AND HEIGHT OF LOUVER UNLESS NOTED OTHERWISE. RE: 18/M601 FOR INTAKE & 17/M601 FOR EXHAUST.
9. PROVIDE NEW HORIZONTAL FAN COIL UNIT AS SCHEDULED AT LOCATION SHOWN. SUSPEND FAN COIL UNIT FROM STRUCTURE. PROVIDE FLEXIBLE CONNECT AT UNIT DISCHARGE. PROVIDE ALL CLEARANCES AND ACCESS AS RECOMMENDED BY THE MANUFACTURER. RE: DETAIL 13/M601.
10. ROUTE REFRIGERANT PIPING UP THROUGH MEZZANINE TO ASSOCIATIVE FAN COIL UNIT. SIZE PER MANUFACTURERS RECOMMENDATION. CONTRACTOR TO VERIFY EXACT ROUTING. RE: DETAILS 3&4/M602.
11. PROVIDE RETURN AIR BOOT IN LOCATION SHOWN. SIZE AS INDICATED ON PLANS. RE: DETAILS 8, 9, 10/M601.
12. PROVIDE CEILING MOUNTED EXHAUST FAN AS SCHEDULED IN APPROXIMATE LOCATION. RE: DETAIL 19/M601.
13. PROVIDE ELECTRIC UNIT HEATER AT APPROXIMATE LOCATION. MOUNT HEATER 12" BELOW CEILING OR MAXIMUM MOUNT HEIGHT. FIELD COORDINATE EXACT LOCATION TO AVOID CONFLICTS WITH ADJACENT EQUIPMENT. RE: DETAIL 20/M601.
14. PROVIDE NO2 (NITROGEN DIOXIDE) DETECTOR, HONEYWELL ANALYTICS E3POINT WITH MOTOR STARTER, WITH A BATTERY BACK-UP AND TEST BUTTON AT SAME ELEVATION AS LIGHT SWITCHES. COORDINATE WITH ARCHITECT PRIOR TO CONSTRUCTION TO AVOID CONFLICTS. GEF-1 & GEF-2 SHALL RAMP UP TO MAXIMUM AIRFLOW RATE AND A VISUAL AND AUDIBLE ALARM WILL SIGNAL WHEN THE NO2 DETECTOR DETECTS A CONCENTRATION OF 50 PARTS PER MILLION OF NO2. NO2 DETECTORS SHALL BE INSTALLED IN ACCORDANCE WITH MANUFACTURER'S RECOMMENDATIONS.
15. PROVIDE CO (CARBON MONOXIDE) DETECTOR, HONEYWELL ANALYTICS E3POINT WITH MOTOR STARTER, WITH A BATTERY BACK-UP AND TEST BUTTON AT SAME ELEVATION AS LIGHT SWITCHES. COORDINATE WITH ARCHITECT PRIOR TO CONSTRUCTION TO AVOID CONFLICTS. GEF-1 & GEF-2 SHALL RAMP UP TO MAXIMUM AIRFLOW RATE AND A VISUAL AND AUDIBLE ALARM WILL SIGNAL WHEN THE CO DETECTOR DETECTS A CONCENTRATION OF 50 PARTS PER MILLION (ADJ) OF CO. CO DETECTORS SHALL BE INSTALLED IN ACCORDANCE WITH MANUFACTURER'S RECOMMENDATIONS.
16. PROVIDE WALL MOUNTED APPARATUS BAY EXHAUST CONTROLLER, HONEYWELL ANALYTICS E3O1C OR EQUAL, AT SAME ELEVATION AS LIGHT SWITCHES. COORDINATE WITH ARCHITECT PRIOR TO CONSTRUCTION TO AVOID CONFLICT. CONTROLLER SHALL MODULATE THE FAN SPEED OF GEF-1 AND GEF-2 FROM MINIMUM TO MAXIMUM SPEED BASED ON SIGNAL FROM CO/NO2 SENSOR OR WHEN TEMPERATURE EXCEEDS 85°F (ADJ). EXHAUST FAN SHALL OPERATE CONTINUOUSLY AT MINIMUM SPEED. UPON DETECTION OF CO OR NO2 CONCENTRATIONS ABOVE ASSOCIATED HIGH LIMITS, THE EXHAUST FANS SHALL OPERATE AT DESIGN MAXIMUM AIRFLOW RATES.
17. TIE ALL GAS INFRARED HEATERS TOGETHER AND LOCATE THERMOSTAT ON WALL AS SHOWN. MOUNT AT SAME ELEVATION AS LIGHT SWITCHES THERMOSTAT SHALL ENERGIZE HEATER TO MAINTAIN TEMPERATURE AT 60°F (ADJUSTABLE).
18. ROUTE RIGID METAL EXHAUST DUCT TO EXHAUST VENT CAP. VENT CAP TO BE AIR KING PWC6R OR ARCHITECT SPECIFIED EQUIVALENT. PROVIDE TRANSITIONS AS REQUIRED. RE: DETAILS 5/M602.
19. LOCATE THERMOSTAT AS SHOWN. THERMOSTAT MODEL HONEYWELL VISION PRO 8000 MOUNT AT SAME ELEVATION AS LIGHT SWITCHES. COORDINATE EXACT LOCATION WITH ARCHITECT.
20. PROVIDE INLINE EXHAUST FAN AS SCHEDULED. DISCHARGE SHALL TERMINATE ABOVE PLENUM. RE: DETAIL 7/M602.
21. PROVIDE CEILING MOUNTED CASSETTE AS SCHEDULED IN LOCATION SHOWN. INSTALL PER MANUFACTURER'S RECOMMENDATION.
22. PROVIDE WALL MOUNTED DUCTLESS UNIT AT APPROXIMATE LOCATIONS SHOWN.
23. PROVIDE CONDENSING UNIT AS SCHEDULED, AT APPROXIMATE LOCATION SHOWN.
24. PLACE HEAT RECOVERY BOX IN APPROXIMATE AREA.
25. ROUTE DUCTWORK DOWN THROUGH MEZZANINE.
26. ROUTE CONCENTRIC INTAKE AND EXHAUST VENT FOR GAS WATER HEATER TO THE SIDE OF THE BUILDING AND CONNECT TO VENT KIT PROVIDED BY MANUFACTURER.
34. PROVIDE MAGNEGRIP CONTROL PANEL ON WALL IN APPROXIMATE LOCATION SHOWN. ALL CONTROL WIRING FROM PANEL TO DUCT MOUNTED SENSOR SHALL BE ROUND IN 3/4" EMT CONDUIT BY MAGNEGRIP INSTALLER.
35. ROUTE VENT FOR EQUIPMENT UP THROUGH ROOF. SIZE VENT PER MANUFACTURER'S INSTRUCTIONS.
27. CONNECT 10"Ø EXHAUST TO RANGE HOOD. CONFIRM FINAL HOOD CONNECTION AND PROVIDE TRANSITIONS AS REQUIRED. WRAP ENTIRE DUCT AND LOUVER PLENUM WITH 3M TWO-HOUR RATED FIRE WRAP, SIMILAR TO MODEL 615+.
28. ROUTE CONDENSATE TO MOP SINK AT LOCATION SHOWN. REFER TO PLUMBING FOR EXACT LOCATION. UNLESS NOTED OTHERWISE, SIZE CONDENSATE PER MANUFACTURER'S RECOMMENDATION. RE: DETAIL 7/M601.
29. ROUTE 4" DIAMETER COMBUSTION AIR INTAKE UP THROUGH ROOF. PROVIDE WITH COMBUSTION AIR INTAKE KIT. INSTALL PER MANUFACTURER'S SPECIFICATIONS.
30. VERTICAL SUCTION RAIL PROVIDED AND INSTALLED BY MAGNEGRIP. MAGNEGRIP TO COORDINATE LOCATION WITH OWNER'S EQUIPMENT. BOTTOM OF RAILS TO BE INSTALLED AT 12'-4" A.F.F..
31. EXTEND 8"ø DUCT DOWN AND CONNECT TO TOP OF HORIZONTAL SUCTION RAIL.
32. ROUTE EXHAUST DUCT AS HIGH AS POSSIBLE.
33. PROVIDE INLINE VEHICLE EXHAUST FAN AS SCHEDULED. SUSPEND FROM STRUCTURE ABOVE. EXTEND DISCHARGE DUCT THROUGH EXTERIOR WALL AND TERMINATE WITH WALL CAP. SEAL PENETRATION WEATHER-TIGHT. BOTTOM OF FAN SHALL BE MOUNTED AT 15'-6" A.F.F..

TRUE NORTH / PROJECT NORTH

DBR
9601 McAllister Freeway, Suite 410
San Antonio, Texas 78216
210.546.0200 v 210.546.0201 f
TBPE Firm Registration No. 2234

DBR Project Number 196024.000

JC | BV | CL | WJ | MC

PROFESSIONAL SEAL

NOT FOR CONSTRUCTION OR PERMITTING; PRINTED FOR REVIEW ONLY
01/14/2020
M. JACQUELINE CHANG, P.E.
TEXAS #124087

martinez ARCHITECTS
Martinez Architect, LP
900 Rockmead, Suite 250
Houston, Texas 77339
281.346.7371

DESIGN TEAM

Architectural
Martinez Architects

Civil Engineer
Maverick Engineering

Structural
Matrix Structural engineers

MEP/FP/T
DBR

Landscape Architect
KDC Associates

Consultant 5 Discipline Type
Consultant 5 Name

FIRE STATION #11

CITY OF MIDLAND
6600 BRIARWOOD AVE
MIDLAND, TX 79707

PROJECT No: MA 18017
DATE: 01/14/2020

ISSUE	Date	Description
		100% DESIGN DEVELOPMENT
	22-MAY-2019	
		75% CONSTRUCTION DOCUMENT
	26-JUN-2019	
		100% ISSUE FOR PERMIT
	30-JUL-2019	
		100% ISSUE FOR APPROVAL TO BID
	16-JAN-2020	

LEVEL 1 & MEZZANINE MECHANICAL PLAN

M201

4.1446

VRF INDOOR UNITS SCHEDULE

MARK	AREA SERVES	TYPE	SUPPLY AIR CFM	OUTSIDE AIR CFM	ESP (IN. WG) (AVAILABLE)	COOLING				HEATING		Electrical			WEIGHT (LBS)	MODEL NUMBER	MANUFACTURER	REMARKS
						TEMPERATURE (°F)		TOTAL CAPACITY (MBH)	SENSIBLE CAPACITY (MBH)	TEMPERATURE (°F)	MBH	VOLTAGE / PHASE / HZ	MCA	MOCP				
						ENTERING AIR				ENTERING AIR DB								
						DB	WB											
CC-1	DORM 1	CEILING CASSETTE 4 WAY	307	10	0.25	70.4	59.7	8.5	4.3	70.2	3.2	208/1/60	0.3	15	45	FXAQ	DAIKIN	1, 2, 3
CC-2	DORM 2	CEILING CASSETTE 4 WAY	300	10	0.25	70.4	59.7	6.4	3.6	70.2	2.9	208/1/60	0.3	15	45	FXAQ	DAIKIN	1, 2, 3
CC-3	DORM 3	CEILING CASSETTE 4 WAY	300	10	0.25	70.4	59.7	6.4	3.6	70.2	2.9	208/1/60	0.3	15	45	FXAQ	DAIKIN	1, 2, 3
CC-4	DORM 4	CEILING CASSETTE 4 WAY	300	10	0.25	70.4	59.7	6.4	3.6	70.2	3	208/1/60	0.3	15	45	FXAQ	DAIKIN	1, 2, 3
CC-5	DORM 5	CEILING CASSETTE 4 WAY	300	10	0.25	70.4	59.7	6.4	3.6	70.2	2.3	208/1/60	0.3	15	45	FXAQ	DAIKIN	1, 2, 3
CC-6	DORM 6	CEILING CASSETTE 4 WAY	300	10	0.25	70.4	59.7	6.4	3.6	70.2	2.3	208/1/60	0.3	15	45	FXAQ	DAIKIN	1, 2, 3
CC-7	DORM 7	CEILING CASSETTE 4 WAY	300	10	0.25	70.4	59.7	6.4	3.6	70.2	2.4	208/1/60	0.3	15	45	FXAQ	DAIKIN	1, 2, 3
CC-8	DORM 8	CEILING CASSETTE 4 WAY	405	10	0.25	70.4	59.7	17	8.1	70.2	5	208/1/60	0.4	15	45	FXAQ	DAIKIN	1, 2, 3

NOTES:
1. ELECTRICAL TO PROVIDE DISCONNECT SWITCH.
2. REFRIGERANT PIPE SHALL BE SIZED BY THE MANUFACRTURER.
3. PROVIDE DRAIN PUMP KIT.

VRF OUTDOOR UNITS SCHEDULE

MARK	SERVES	COOLING				HEATING				REFRIGERANT		SOUND PRESSURE LEVEL dB (COOLING)	SOUND PRESSURE LEVEL dB (HEATING)	MODEL NUMBER	ELECTRICAL				WEIGHT GROSS	MANUFACTURER
		TEMPERATURE (°F)	CAPACITY		IEER	TEMPERATURE (°F)	CAPACITY		COP	REFRIGERANT TYPE	ADDITIONAL CHARGE				VOLTAGE / PHASE / HZ	MCA	BREAKER SIZE	MAXIMUM FUSE		
		OUTDOOR AMBIENT	NOMINAL MBH	ACTUAL MBH AT 105F		OUTDOOR AMBIENT	NOMINAL MBH AT 47 ° F	ACTUAL MBH												
VRF-CU-1	ALL CC UNITS	105	96.0	65.0	25.20	28.00	160	74	4.33	R-410A	11.7	78.0	78.0	REYQ	208/3/60	38.1	45	45	100	DAIKIN

NOTES:
1. ALL SUCTION, LIQUID AND HOT GAS (ON HEAT RECOVERY UNITS) SHALL BE INSULATED WITH 1" ARMAFLEX INSULATION OR APPROVED EQUAL
2. REFRIGERANT PIPE SHALL BE SIZED BY THE MANUFACRTURER.
3. PROVIDE UNIT WITH PROTECTION NET FOR PROTECTION OF OUTDOOR UNIT HEAT EXCHANGER.
4. PROVIDE UNIT WITH HAIL PROTECTION HOOD FOR PROTECTING THE OU AIR INLET / OUTLET FROM HAIL.
5. IF THE CONDENSING UNIT REQUIRES MULITPLE POWER CONNECTIONS, MECHANICAL CONTRACTOR IS RESPONSIBLE FOR ADDITIONAL ELECTRICAL COSTS DUE TO ALTERNATE EQUIPMENT. REFER TO SCHEDULE.
6. THE SYSTEM SHALL USE VARIABLE FREQUENCY DRIVES ON THE COMPRESSOR AND CONDENSER FAN FOR MAXIMUM PART LOAD EFFICIENCY.
7. PROVIDE TIME DELAY RELAY FOR EACH CONDENSING UNIT TO ALLOW THEM TO START UP AFTER 10 SECONDS AND IN 10 SECOND INTERVALS IN THE EVENT OF A POWER LOSS.

AIR DEVICE SCHEDULE

MARK	MFR. & MODEL	TYPE	REMARKS
A	TITUS - TMS-AA	LOUVERED FACE SUPPLY AIR DIFFUSER	24"x24" FACE, ALUMINUM CONSTRUCTION WITH FRAME FOR LAY-IN CEILING OR SURFACE MOUNT. REFER TO PLANS FOR CEILING TYPE.
B	TITUS - PAR-AA	24"x24" PERFORATED FACE RETURN / EXHAUST AIR GRILLE	ALUMINUM CONSTRUCTION WITH FRAME FOR LAY-IN CEILING OR HARD CEILING, DEPENDING ON CEILING TYPE. REFER TO ARCHITECTURAL PLANS FOR CEILING TYPE; PROVIDE 22"x22" NECK OPEN TO PLENUM UNLESS OTHERWISE NOTED ON DRAWINGS. PROVIDE O.B.D. WHEN USED FOR DUCTED EXHAUST.
C	TITUS - 300FL	SIDEWALL SUPPLY AIR GRILLE	ALUMINUM CONSTRUCTION WITH FRAME FOR SURFACE MOUNT. 3/4" BLADE SPACING, DOUBLE DEFLECTION WITH FRONT BLADES PARALLEL TO LONG DIMENSION.
D	TITUS - 350FL	SIDEWALL RETURN / EXHAUST AIR GRILLE	STEEL CONSTRUCTION WITH FRAME FOR SURFACE MOUNT. 3/4" BLADE SPACING, 35° DEFLECTION WITH BLADES PARALLEL TO LONG DIMENSION. PROVIDE O.B.D. FOR DUCTED EXHAUST.

NOTES:
1. STANDARD WHITE FINISH FOR CEILING MOUNTED DEVICES UNLESS OTHERWISE NOTED. REFER TO ARCHITECTURAL DRAWINGS FOR SPECIFICATIONS. FINAL DEVICE COLOR SHALL BE COORDINATED WITH ARCHITECT PRIOR TO ORDERING.
2. PROVIDE FRAME TO MATCH CEILING TYPE INDICATED ON ARCHITECTS REFLECTED CEILING PLAN.
3. PAINT INTERIOR SURFACES OF DUCTWORK VISIBLE FROM FACE OF RETURN AIR GRILLES FLAT BLACK.

VARIABLE REFRIGERANT FLOW HEAT RECOVERY BOX SCHEDULE

Tag	Ports	Capacity (MBH)		Electrical			Weight (Lbs)	Manuf.	Model	Notes
		Unit	Port	MCA	MOCP	Voltage				
BC-1	10	230	60	0.8	15	208/1/60	100	DAIKIN	BS10Q54TVJ	ALL

Notes
1. CONTRACTOR TO SUPPLY AND INSTALL SINGLE POLE, DOUBLE THROW LIGHT SWITCH TYPE DISCONNECT ON EACH HEAT RECOVERY BOX. THE INDOOR UNIT/HEAT RECOVERY BOXES AND THE OUTDOOR UNITS REQUIRE SEPARATE CIRCUITS.
2. PROVIDE WITH GALVANIZED SHEET METAL FINISH AND SOUND ABSORBING THERMAL INSULATION (FLAME RESISTANT FOAM POLYETHYLENE)
3. Y-BRANCHES DOWNSTREAM OF A PORT TO ACCOMMODATE MORE THAN ONE INDOOR UNIT PER PORT IS NOT ACCEPTABLE UNLESS SPECIFICALLY DESIGNED ON THE PLANS
4. INDOOR UNITS CONNECTED TO THE HEAT RECOVERY BOX MUST BE ABLE TO INDEPENDENTLY HEAT OR COOL REGARDLESS OF MODE OF ANY OTHER INDOOR UNIT ON HRU.
5. CONTRACTOR TO FIELD INSTALL 2-POSITION ISOLATION VALVE (MIN 800 PSI AND 300 F RATING) UPSTREAM OF HEAT RECOVERY BOX. INSTALL VALVE 6'-12" UPSTREAM IN AN ACCESSIBLE LOCATION AND PROVIDE ACCESS DOOR IF NECESSARY.
6. CONTRACTOR TO MAINTAIN SERVICE CLEARANCE OF 18" ON FRONT (ELECTRICAL CONNECTION), 12" ON SIDES AND 4" ON TOP. HEAT RECOVERY BOX TO HAVE TOP AND BOTTOM ACCESS.
7. PROVIDE WITH ONE YEAR PARTS AND LABOR WARRANTY AND ADDITIONAL ONE YEAR PARTS ONLY WARRANTY.
8. CONTRACTOR RESPONSIBLE FOR ANY COSTS INCURRED USING ALTERNATE MANUFACTURER HEAT RECOVERY BOX INCLUDING BUT NOT LIMITED TO ELECTRICAL, CONDENSATE PIPING, REFRIGERANT PIPING, OR STRUCTURAL CHANGES.
9. ELEVATION DIFFERENCE BETWEEN HEAT RECOVERY BOX AND INDOOR UNIT SHALL NOT EXCEED 49 FOOT.

DBR
9601 McAllister Freeway, Suite 410
San Antonio, Texas 78216
210.546.0200 v 210.546.0201 f
TBPE Firm Registration NO. 2234

DBR Project Number 196024.000

JC	BV	CL	WJ	MC

PROFESSIONAL SEAL

NOT FOR CONSTRUCTION OR PERMITTING; PRINTED FOR REVIEW ONLY
01/14/2020
M. JACQUELINE CHANG, P.E.
TEXAS #124697

martinez ARCHITECTS
Martinez Architect, LP
900 Rockmead, Suite 250
Houston, Texas 77339
281.346.7371

DESIGN TEAM

Architectural
Martinez Architects

Civil Engineer
Consultant 1 Name

Structural
Matrix Structural Engineers

MEP
DBR

Landscaping
KDC Associates

FIRE STATION #11
CITY OF MIDLAND
Briarwood Ave & Golden Gate Dr
Midland, TX 79707

PROJECT No: MA 18017
DATE: 01/14/2020

ISSUE Date Description
100% DESIGN DEVELOPMENT 22-MAY-2019
75% CONSTRUCTION DOCUMENT 26-JUN-2019
100% ISSUE FOR PERMIT 30-JUL-2019
100% ISSUE FOR APPROVAL TO BID 16-JAN-2020

MECHANICAL SCHEDULES

M501

4.1447

DX FAN COIL UNIT SCHEDULE

	MARK	FCU-1	FCU-2	FCU-3	FCU-4	FCU-5
	SERVES	STORAGE/UTILITY	EXERCISE	OFFICE	DAY ROOM	KITCHEN
	TYPE	DIRECT DRIVE/ECM	DIRECT DRIVE/ECM	DIRECT DRIVE/ECM	DIRECT DRIVE/ECM	DIRECT DRIVE/ECM
FAN	SUPPLY AIR (CFM)	1,025	960	520	1,595	790
FAN	OUTDOOR AIR (CFM)	60	305	85	130	130
FAN	FAN TYPE	FORWARD CURVE	FORWARD CURVE	FORWARD CURVE	FORWARD CURVE	FORWARD CURVE
FAN	FAN SPEED	MEDIUM-LOW	MEDIUM-LOW	MEDIUM-LOW	MEDIUM-LOW	MEDIUM-LOW
FAN	EXT. S.P. (IN. W.G.)	0.75	0.75	0.75	0.75	0.75
FAN	VOLTS/PHASE/HERTZ	208/1/60	208/1/60	208/1/60	208/1/60	208/1/60
FAN	FAN MOTOR HORSEPOWER	1	1	1/2	1	1
DX COOLING COIL	MAX. COIL FACE VELOCITY (FPM)	500	500	500	500	500
DX COOLING COIL	MIN. ROWS/MAX. FINS PER INCH	4/12	4/12	4/12	4/12	4/12
DX COOLING COIL	COIL CFM	1,025	960	520	1,595	790
DX COOLING COIL	EAT DB/WB (°F)	76.0/62.2	73.8/61.1	74.8/61.6	75.5/62	75.4/61.9
DX COOLING COIL	LAT DB/WB (°F)	51.8/51.5	50.6/50.4	51.1/51.1	51.6/51.3	51.5/51.2
DX COOLING COIL	TOTAL COOLING CAPACITY (MBH)	31.94	31.42	18.82	32.76	31.80
DX COOLING COIL	SENSIBLE COOLING CAPACITY (MBH)	27.26	26.23	17.04	27.58	26.98
DX COOLING COIL	REFRIGERANT TYPE	R410A	R410A	R410A	R410A	R410A
ELECTRIC RE-HEAT	MAX. COIL FACE VELOCITY (FPM)	700	700	700	700	700
ELECTRIC RE-HEAT	ELEMENT TYPE	OPEN	OPEN	OPEN	OPEN	OPEN
ELECTRIC RE-HEAT	EAT (°F)	67.4	67.4	63.3	67.4	67.4
ELECTRIC RE-HEAT	LAT (°F)	85.9	87.2	81.5	79.3	91.4
ELECTRIC RE-HEAT	ACTUAL KW	8.0	8.0	4.0	8.0	8.0
ELECTRIC RE-HEAT	INPUT KW	6.0	6.0	3.0	6.0	6.0
ELECTRIC RE-HEAT	STEPS CONTROL	1	1	1	1	1
ELECTRIC RE-HEAT	VOLTS/PHASE/HERTZ	208/3/60	208/3/60	208/1/60	208/3/60	208/3/60
	MCA	26	26	23	26	26
	MOCP	30	30	25	30	30
	MANUFACTURER	LENNOX	LENNOX	LENNOX	LENNOX	LENNOX
	MODEL NUMBER	CBX27UH-036	CBX27UH-036	CBX27UH-030	CBX27UH-036	CBX27UH-036
	UNIT WEIGHT (LBS)	160	160	160	160	160
	NOTES	1,2,3,4	1,2,3,4	1,2,3,4	1,2,3,4	1,2,3,4

NOTES:
1. EXTERNAL STATIC PRESSURE DOES NOT ACCOUNT FOR LOSSES DUE TO COIL(S), FILTERS, HOUSING, NOR ACCESSORIES.
2. PROVIDE UNIT WITH HORIZONTAL DISCHARGE.
3. PROVIDE FILTERS WITH MINIMUM EFFICIENCY OF MERV 8.
4. PROVIDE UNIT WITH SINGLE POINT ELECTRICAL CONNECTION.

AIR COOLED CONDENSING UNIT SCHEDULE

MARK	ACCU-1	ACCU-2	ACCU-3	ACCU-4	ACCU-5
SERVES	FCU-1	FCU-2	FCU-3	FCU-4	FCU-5
UNIT SIZE	3 TON	3 TON	1.5 TON	3 TON	3 TON
NET TOTAL COOLING CAPACITY (MBH)	29.13	28.42	19.18	29.58	28.93
AMBIENT TEMP. (°F)	100	100	100	100	100
REFRIGERANT TYPE	R-410A	R-410A	R-410A	R-410A	R-410A
NUMBER STAGES OF COOLING	2	2	2	2	2
SEER (AT ARI)	15.00	15.00	16.00	15.00	15.00
EER (AT ARI)	-	-	-	-	-
MCA	16.2	16.2	12.4	16.2	16.2
MOCP	25	25	20	25	25
VOLTS/PHASE/HERTZ	208/3/60	208/3/60	208/1/60	208/3/60	208/3/60
MANUFACTURER	LENNOX	LENNOX	LENNOX	LENNOX	LENNOX
MODEL NUMBER	SSB036H4-230	SSB036H4-230	14ACXS018-230	SSB036H4-230	SSB036H4-230
UNIT WEIGHT (LBS)	245	245	140	245	245
NOTES	1,2,3	1,2,3	1,2,3	1,2,3	1,2,3

NOTES:
1. INSTALL PER MANUFACTURER'S SPECIFICATIONS.
2. MOUNT ON 6" HOUSEKEEPING PAD.
3. PROVIDE ALL CLEARANCES AS REQUIRED BY EQUIPMENT MANUFACTURER.

TOILET EXHAUST FAN SCHEDULE

MARK	TEF-1	TEF-2	TEF-3	TEF-4	TEF-5		
SERVES	RR	RR	RR	RR	RR		
TYPE / DRIVE	CEILING / DIRECT	CEILING / DIRECT	CEILING / DIRECT	CEILING / DIRECT	CEILING / DIRECT		
CFM (MAX / MIN)	65	65	65	65	65		
EXT. S.P. (IN. W.G.)	0.30	0.30	0.83	0.75	0.75		
FAN RPM	900	900	1,000	900	900		
SONES (MAX.)	0.5	0.5	5	4.5	4.5		
VOLTS/PHASE/HERTZ	115/1/60	115/1/60	115/1/60	115/1/60	115/1/60		
FLA	0.34	0.34	0.77	0.43	0.43		
INPUT WATTS	15	15	83	46	46		
UNIT WEIGHT - LBS	12	12	24	24	24		
MANUFACTURER	GREENHECK	GREENHECK	GREENHECK	GREENHECK	GREENHECK		
MODEL NUMBER	SP-A90	SP-A90	SP-A250	SP-A200	SP-A200		
NOTES	1, 2	1, 2	1, 2	1, 2	1, 2		

NOTES:
1. FAN SHALL BE INTERLOCKED WITH DEDICATED SWITCH IN ASSOCIATED ROOM. COORDINATE WITH ELECTRICIAN FOR WIRING REQUIREMENTS.
2. PROVIDE FAN WITH MOTOR RATED TOGGLE SWITCH ANC BACKDRAFT DAMPER.

FAN SCHEDULE

MARK	EF-1	EF-2	EF-3	EF-4	EF-5	EF-6	EF-7	GEF-1, GEF-2
SERVES	DECONTAMINATION 132	ELECTRICAL 112	AIRLOCK 136	AIRLOCK 113	UTILITY 123	AIRLOCK 103	VEHICLE EXHAUST	APPARATUS BAY 129
TYPE / DRIVE	CEILING / DIRECT	INLINE/BELT	CEILING / DIRECT	CEILING / DIRECT	CEILING / DIRECT	CEILING / DIRECT	INLINE/BELT	INLINE/BELT
CFM (MAX / MIN)	150	90	65	65	200	65	3300	(3,200 / 1,000)
EXT. S.P. (IN. W.G.)	0.30	0.30	0.30	0.30	0.25	0.30	6.00	0.25
FAN RPM	900	1,016	900	900	950	900	3,450	688
SONES (MAX.)		7.2	0.5	0.5	0.6	0.5	21	11.5
VOLTS/PHASE/HERTZ	115/1/60	115/1/60	115/1/60	115/1/60	115/1/60	115/1/60	208/3/60	208/3/60
FLA	--	5.8	0.34	0.34	2	0.34		9.8
INPUT WATTS	141	--	15	15	61	15	--	--
MOTOR SIZE (HP)	--	1/4	--	--	--	--	5	1/2
UNIT WEIGHT - LBS	12	79	12	12	50	12	250	168
MANUFACTURER	GREENHECK	GREENHECK	GREENHECK	GREENHECK	GREENHECK	GREENHECK	MAGNEGRIP	GREENHECK
MODEL NUMBER	CSP-B-150	BSQ-70-4	SP-A90	SP-A90		SP-A90	CF-363-5	BSQ-200
NOTES	1, 2	2, 4	1, 2	1, 2	1, 2	1, 2	3, 5	3

NOTES:
1. FAN SHALL BE INTERLOCKED WITH DEDICATED SWITCH IN ASSOCIATED ROOM. COORDINATE WITH ELECTRICIAN FOR WIRING REQUIREMENTS.
2. PROVIDE FAN WITH MOTOR RATED TOGGLE SWITCH ANC BACKDRAFT DAMPER.
3. PROVIDE FAN WITH COMBINATION MOTOR STARTER/DISCONNECT SWITCH AND BACKDRAFT DAMPER. STARTER/DISCONNECT PROVIDED BY DIV. 23 INSTALLED BY DIV. 26.
4. FAN SHALL BE INTERLOCKED WITH WALL MOUNTED THERMOSTAT. FAN SHALL BE ENERGIZED WHEN SPACE TEMPERATURE REACHES 80 DEGREES F (ADJUSTABLE).
5. PROVIDE WITH HANGING KIT AND MADNEGRIP FAN CONTROLLER. COORDINATE WITH ELECTRICIAN FOR WIRING REQUIREMENTS.

GAS INFRA-RED RADIANT HEATER SCHEDULE

MARK	IRH-1	IRH-2	IRH-3	IRH-4	IRH-5	IRH-6
SERVES	APPARATUS BAYS	APPARATUS BAYS	APPARATUS BAYS	APPARATUS BAYS	APPARATUS BAYS	APPARATUS BAYS
FUEL TYPE	NATURAL GAS	NATURAL GAS	NATURAL GAS	NATURAL GAS	NATURAL GAS	NATURAL GAS
MAX. CAPACITY (MBH)	150	150	150	150	150	150
MIN. CAPACITY (MBH)	100	100	100	100	100	100
VOLTS/PHASE/HERTZ	115 / 1 / 60	115 / 1 / 60	115 / 1 / 60	115 / 1 / 60	115 / 1 / 60	115 / 1 / 60
MANUFACTURER	REZNOR	REZNOR	REZNOR	REZNOR	REZNOR	REZNOR
MODEL NUMBER	VPT150	VPT150	VPT150	VPT150	VPT150	VPT150
WEIGHT	100	100	100	100	100	100
NOTES	1, 2, 3, 4, 5	1, 2, 3, 4, 5	1, 2, 3, 4, 5	1, 2, 3, 4, 5	1, 2, 3, 4, 5	1, 2, 3, 4, 5

NOTES:
1. PROVIDE 120-VOLT WALL-MOUNTED 3 POSITION SWITCH WITH LOCKING COVER, LOW VOLTAGE CONTROL TRANSFORMER, UNIVERSAL WALL AND CEILING MOUNTED BRACKET, AUTOMATIC RESET THERMAL CUT-OUT, AND DISCONNECT SWITCH.
2. PROVIDE WITH TWO STAGE HEATING.
3. PROVIDE WITH OUTDOOR COMBUSTION AIR INLET KIT.
4. PROVIDE WITH A VENT KIT.

DUCTLESS SPLIT A/C SCHEDULE

	MARK	DS-1
INDOOR UNIT	SERVES	IT
INDOOR UNIT	SUPPLY AIR (CFM AT HIGH SPEED)	330
INDOOR UNIT	TOTAL COOLING CAPACITY (MBH)	9.0
INDOOR UNIT	MCA	NA
INDOOR UNIT	VOLTS/PHASE/HERTZ	208/3/60
INDOOR UNIT	MODEL NUMBER	FTKN09NMVJU
INDOOR UNIT	NOTES	1, 2, 3, 4
	MARK	DSCU-1
OUTDOOR UNIT	SERVES	DS-1
OUTDOOR UNIT	GRAND TOTAL COOLING (MBH)	9
OUTDOOR UNIT	AMBIENT TEMP. (°F)	105
OUTDOOR UNIT	S.E.E.R.	16
OUTDOOR UNIT	E.E.R.	10.6
OUTDOOR UNIT	MCA	7
OUTDOOR UNIT	MOCP	15
OUTDOOR UNIT	VOLTS/PHASE/HERTZ	208/3/60
OUTDOOR UNIT	MODEL NUMBER	RKN09NMVJU
OUTDOOR UNIT	NOTES	1, 2, 3, 4
OUTDOOR UNIT	MANUFACTURER	DAIKIN

NOTES:
1. PROVIDE WITH SINGLE POINT POWER TO INCLUDE CONDENSING UNIT AND REMOTE THERMOSTAT. INDOOR UNIT SHALL BE POWERED FROM OUTDOOR UNIT.
2. INSTALL PER MANUFACTURERS SPECIFICATIONS. PROVIDE UNIT WITH LITTLE GIANT CONDENSATE PUMP MODEL VCMA-15ULS.
3. REFRIGERANT LINES TO BE SIZED BY MANUFACTURER.
4. PROVIDE TIME DELAY RELAY FOR THE CONDENSING UNIT TO ALLOW THEM TO START UP AFTER 30 SECONDS IN THE EVENT OF A POWER LOSS.

ELECTRIC UNIT HEATER SCHEDULE

MARK	EUH -1	EUH -2
SERVES	RISER	YARD STORAGE
CFM	300	300
HEATING CAPACITY (MBH)	12,795	12,795
CAPACITY (KW)	3.75	3.75
DBA	51	51
VOLTS/PHASE/HERTZ	208/1/60	208/1/60
WEIGHT - LBS	20	20
MANUFACTURER	REZNOR	REZNOR
MODEL NUMBER	EGW-5	EGW-5
NOTES	1	1

NOTES:
1. PROVIDE WALL-MOUNTED THERMOSTAT, LOW VOLTAGE CONTROL TRANSFORMER, UNIVERSAL WALL AND CEILING MOUNTED BRACKET, AUTOMATIC RESET THERMAL CUT-OUT, ADJUSTABLE DISCHARGE LOUVER, REMOTE SUMMER FAN SWITCH, FAN DELAY, AND DISCONNECT SWITCH.

DBR
9601 McAllister Freeway, Suite 410
San Antonio, Texas 78216
210.546.0200 v 210.546.0201 f
TBPE Firm Registration NO. 2234

DBR Project Number 196024.000

JC	BV	CL	WJ	MC

PROFESSIONAL SEAL

NOT FOR CONSTRUCTION OR PERMITTING; PRINTED FOR REVIEW ONLY
01/14/2020
M. JACQUELINE CHANG, P.E.
TEXAS #124697

martinez ARCHITECTS
Martinez Architect, LP
900 Rockmead, Suite 250
Houston, Texas 77339
281.346.7371

DESIGN TEAM

Architectural
Martinez Architects

Civil Engineer
Consultant 1 Name

Structural
Matrix Structural Engineers

MEP
DBR

Landscaping
KDC Associates

FIRE STATION #11

CITY OF MIDLAND
Briarwood Ave & Golden Gate Dr
Midland, TX 79707

PROJECT No: MA 18017
DATE: 01/14/2020

ISSUE	Date	Description
100% DESIGN DEVELOPMENT	22-MAY-2019	
75% CONSTRUCTION DOCUMENT	26-JUN-2019	
100% ISSUE FOR PERMIT	30-JUL-2019	
100% ISSUE FOR APPROVAL TO BID	16-JAN-2020	

MECHANICAL SCHEDULES

M502

4.1448

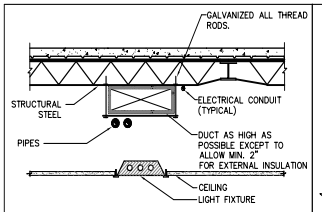

NOTES:
1. PIPES (INCLUDING SPRINKLER PIPING) AND ELECTRICAL CONDUIT CAN BE ROUTED BETWEEN JOISTS OR THROUGH JOIST WEB SPACE AS REQUIRED. DUCT SHALL BE LOCATED AS HIGH AS POSSIBLE.
2. U.L. DESIGN ASSEMBLY NUMBERS ARE SHOWN ON ARCHITECTURAL PLANS WHEN REQUIRED.
3. INSTALLATION OF ALL SERVICES MUST BE COORDINATED BY THE CONTRACTOR.

1 TYP. MEP INSTALLATION DETAIL
NOT TO SCALE

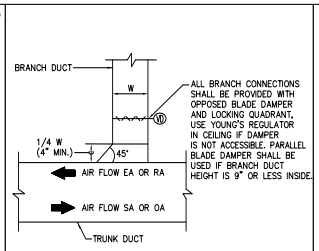

NOTE: THIS CONNECTION SHALL BE TYPICAL FOR ALL RECTANGULAR BRANCH DUCT CONNECTIONS TO RECTANGULAR TRUNK DUCTS, INCLUDING SUPPLY, RETURN, OUTSIDE AIR AND EXHAUST DUCTS.

2 RECTANGULAR BRANCH DUCT TAP
NOT TO SCALE

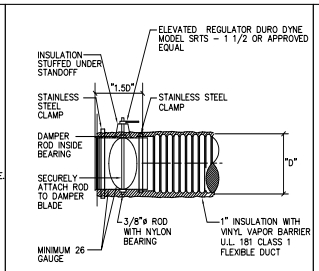

NOTE: 1. ALL FLEXIBLE DUCT OFFSETS AND BENDS SHALL MAINTAIN A RADIUS OF 1.5 X ("D") MINIMUM 3'–0" AND MAXIMUM 6'–0"
2.TYPICAL OF ROUND DUCT CONNECTIONS TO RECTANGULAR DUCTS
3.ALL JOINTS SHALL BE SEALED WITH MASTIC AND FIBER CLOTH PER SPECIFICATIONS.

3 SPIN-IN DETAIL
NOT TO SCALE

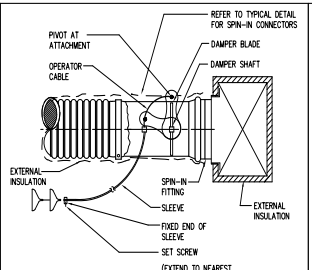

NOTE: MOUNT OPERATOR CRANK AND CABLE PLATFORM ON TOP OF EXTERNAL INSULATION AT DAMPER.

4 REMOTE SPIN-IN DAMPER OPERATOR
NOT TO SCALE

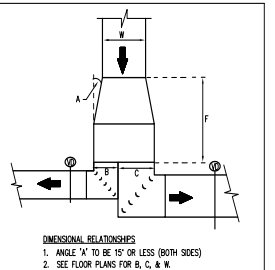

DIMENSIONAL RELATIONSHIPS
1. ANGLE 'A' TO BE 15° OR LESS (BOTH SIDES)
2. SEE FLOOR PLANS FOR B, C, & W.
3. VERTICAL DIMENSION TO BE MAINTAINED THRU F.
4. CHANGE IN VERTICAL DIMENSION TO OCCUR AFTER TURNS.

NOTE: VOLUME DAMPERS REQUIRED FOR LOW PRESSURE DUCT SYSTEMS ONLY.

5 DUCTWORK TEE DETAIL
NOT TO SCALE MAGD303.DWG

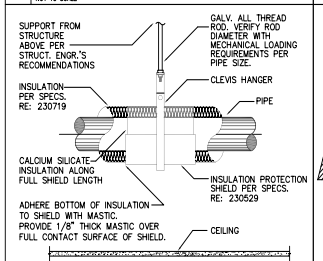

NOTE:
CONTRACTOR SHALL SECURE STRUCT. ENGR. APPROVAL FOR ANY AND ALL PIPE MOUNTING DETAILS TO CONCRETE OR STEEL STRUCTURE. CONTRACTOR SHALL CONFORM TO ALL MAXIMUM SPAN DISTANCES PER SPECIFICATIONS FOR HANGER SPACING. RE: 230529

6 PIPE HANGER DETAIL (1-PIPE)
NOT TO SCALE MPHS102.DWG

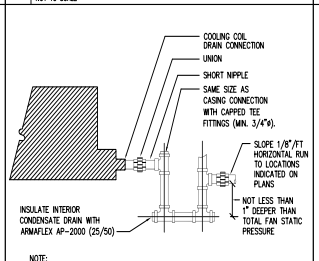

NOTE:
1. MAINTAIN MINIMUM 1" AIR GAP AT FLOOR DRAIN OR ROOF DRAIN.
2. ALL CONDENSATE DRAIN PIPING SHALL BE SCHEDULE 40 GALVANIZED STEEL WITH MALLEABLE IRON SCREWED FITTINGS.
3. PROVIDE CLEAN OUT FITTINGS AT ALL CHANGE OF DIRECTION IN DRAIN LINE(S).

7 COOLING COIL CONDENSATE DRAIN
NOT TO SCALE MPCE300.DWG

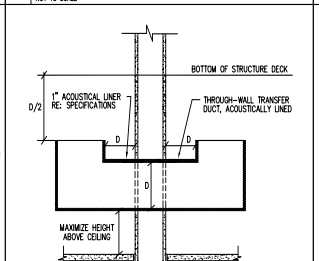

8 RETURN AIR BOOT THRU WALL
NOT TO SCALE MARA.DWG

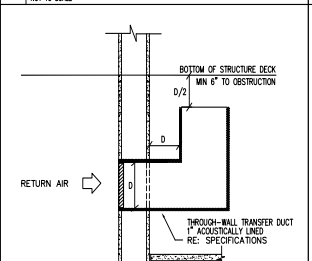

9 SIDEWALL REGISTER RETURN AIR BOOT
NOT TO SCALE

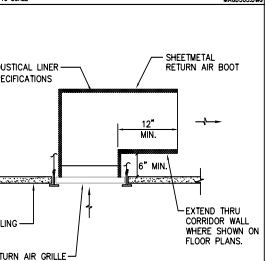

NOTE: TYPICAL FOR ALL RETURN AIR GRILLES

10 RETURN AIR BOOT AT GRILLE
NOT TO SCALE MARA200.DWG

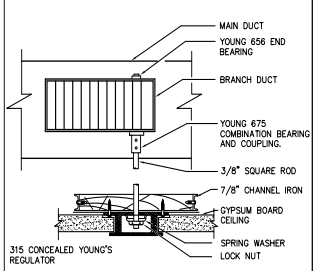

11 YOUNG'S REGULATOR OPERATOR
NOT TO SCALE

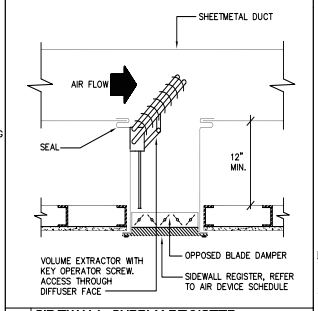

12 SIDEWALL SUPPLY REGISTER DETAIL
NOT TO SCALE MAAD101.DWG

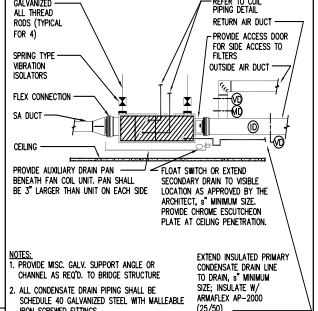

NOTES:
1. PROVIDE MISC. GALV. SUPPORT ANGLE OR CHANNEL AS REQ'D. TO BRIDGE STRUCTURE
2. ALL CONDENSATE DRAIN PIPING SHALL BE SCHEDULE 40 GALVANIZED STEEL WITH MALLEABLE IRON SCREWED FITTINGS.

13 FAN COIL UNIT MOUNTING
NOT TO SCALE MEFC100.DWG

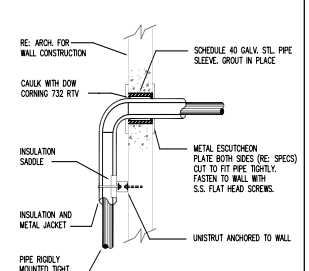

14 PIPE ENTRY THRU EXTERIOR WALL
NOT TO SCALE MPPE302.DWG

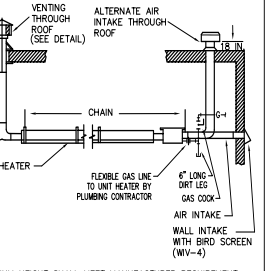

NOTES:
1. MINIMUM HEIGHT SHALL MEET MANUFACTURER REQUIREMENT.
2. REFER TO MANUFACTURER INSTRUCTION FOR INSTALLATION AND SUPPORT.

15 INFRARED UNIT HEATER MOUNTING
NOT TO SCALE MEFA100.DWG

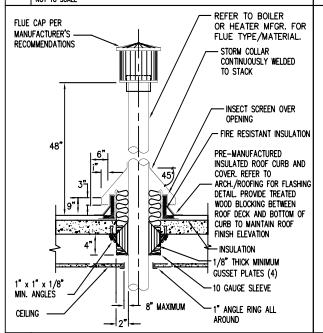

16 STEEL FLUE THRU ROOF DETAIL
NOT TO SCALE

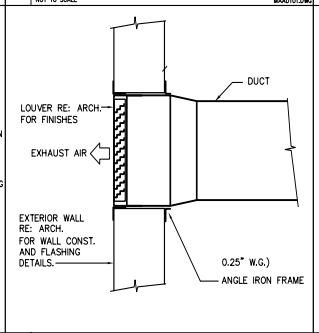

17 EXHAUST LOUVER MOUNTING
NOT TO SCALE

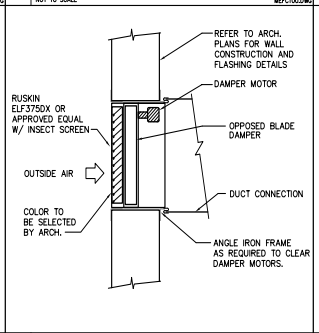

18 INTAKE LOUVER MOUNTING
NOT TO SCALE

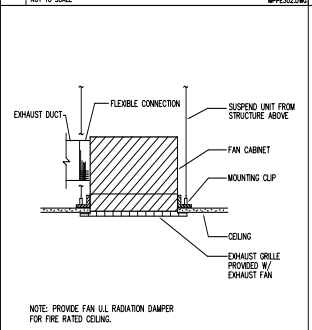

NOTE: PROVIDE FAN U.L RADIATION DAMPER FOR FIRE RATED CEILING.

19 CEILING MOUNTED EXHAUST FAN
NOT TO SCALE

DBR
9601 McAllister Freeway, Suite 410
San Antonio, Texas 78216
210.546.0200 v 210.546.0201 f
TBPE Firm Registration NO. 2234

DBR Project Number 196024.000

JC	BV	CL	WJ	MC

PROFESSIONAL SEAL

NOT FOR CONSTRUCTION OR PERMITTING; PRINTED FOR REVIEW ONLY
01/14/2020
M. JACQUELINE CHANG, P.E.
TEXAS #124897

martinez ARCHITECTS
Martinez Architect, LP
900 Rockmead, Suite 250
Houston, Texas 77339
281.346.7371

DESIGN TEAM

Architectural
Martinez Architects

Civil Engineer
Consultant 1 Name

Structural
Matrix Structural Engineers

MEP
DBR

Landscaping
KDC Associates

FIRE STATION #11

CITY OF MIDLAND
Briarwood Ave & Golden Gate Dr
Midland, TX 79707

PROJECT No: MA 18017
DATE: 01/14/2020

ISSUE Date Description
100% DESIGN DEVELOPMENT 22-MAY-2019
75% CONSTRUCTION DOCUMENT 26-JUN-2019
100% ISSUE FOR PERMIT 30-JUL-2019
100% ISSUE FOR APPROVAL TO BID 16-JAN-2020

MECHANICAL DETAILS

M601

4.1449

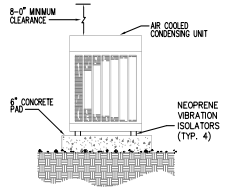

NOTE: PROVIDE CLEARANCE AROUND UNIT FOR AIR FLOW AND SERVICE PER MANUFACTURER'S INSTALLATION INSTRUCTIONS.

1 CONDENSING UNIT MOUNTING ON GRADE
NOT TO SCALE MECU100.DWG

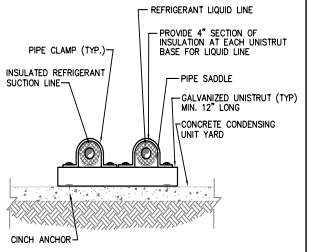

NOTE: PROVIDE SUPPORTS AT 3'-0" ON CENTER AND WITHIN 1'-0" OF ALL CHANGES IN PIPE DIRECTION.

2 FLOOR MOUNTED REFR. PIPE
NOT TO SCALE MPRE200.DWG

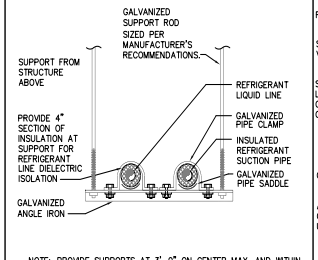

NOTE: PROVIDE SUPPORTS AT 3'-0" ON CENTER MAX. AND WITHIN 1'-0" OF ALL CHANGES IN PIPE DIRECTION.

3 REFRIGERANT PIPE HANGER
NOT TO SCALE MPRE201.DWG

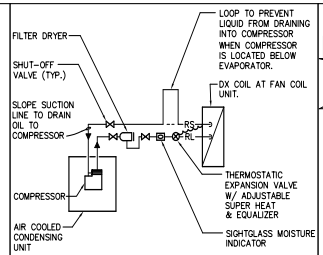

NOTE:
1. COMPLY WITH MANUFACTURER'S PRINTED INSTALLATION INSTRUCTIONS.
2. TYPICAL FOR EACH SEPARATE REFRIGERANT CIRCUIT.
3. PROVIDE FILTER DRYER ON ALL SYSTEMS.
4. USE "ACR" HARD DRAWN COPPER REFRIGERANT PIPE.

4 REFRIGERANT PIPING SCHEMATIC
NOT TO SCALE MPRE100.DWG

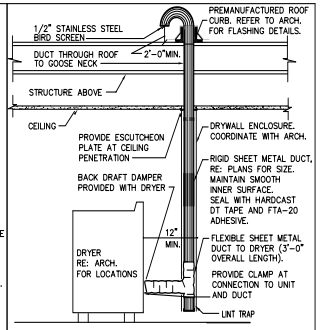

5 DRYER EXHAUST DETAIL
NOT TO SCALE MADT200.DWG

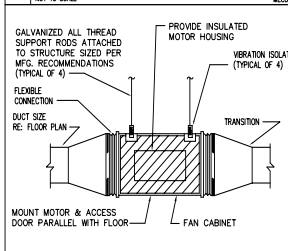

6 IN-LINE EXHAUST FAN DETAIL (EF-7)
NOT TO SCALE

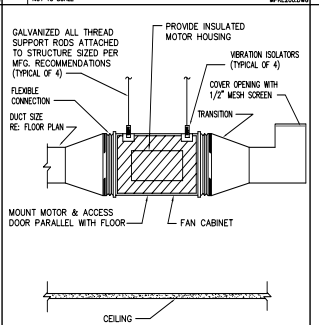

7 IN-LINE EXHAUST FAN DETAIL (EF-2)
NOT TO SCALE

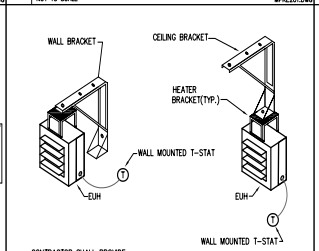

CONTRACTOR SHALL PROVIDE:
- WALL-MOUNTED THERMOSTAT
- LOW VOLTAGE CONTROL TRANSFORMER
- UNIVERSAL WALL AND CEILING-MOUNTED BRACKET
- AUTOMATIC RESET THERMAL CUT-OUT
- ADJUSTABLE DISCHARGE
- REMOTE SUMMER FAN SWITCH

8 ELECTRIC UNIT HEATER DETAIL
NOT TO SCALE

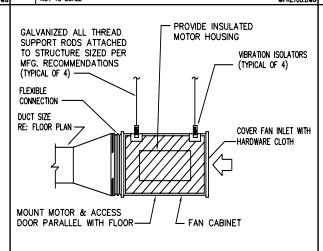

9 IN-LINE GARAGE EXHAUST FAN DETAIL
NOT TO SCALE

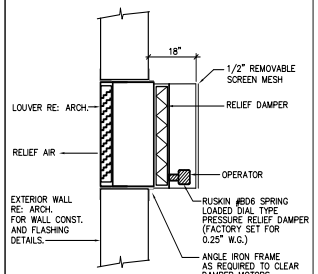

10 RELIEF LOUVER MOUNTING
NOT TO SCALE

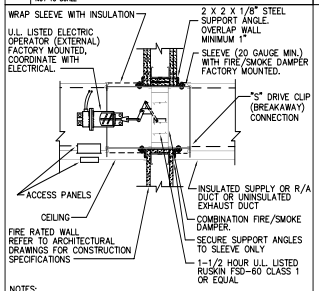

NOTES:
1. LAYERS OF GYP. BOARD SLEEVE MUST MATCH LAYERS OF WALL GYP. BOARD.
2. PROVIDE CLEARANCE AT OPERATOR FOR REPAIR.

11 FIRE/SMOKE DAMPER DETAIL
NOT TO SCALE

PROFESSIONAL SEAL

NOT FOR CONSTRUCTION OR PERMITTING; PRINTED FOR REVIEW ONLY
01/14/2020
M. JACQUELINE CHANG, P.E.
TEXAS #124987

martinez ARCHITECTS
Martinez Architect, LP
900 Rockmead, Suite 250
Houston, Texas 77339
281.346.7371

DESIGN TEAM

Architectural
Martinez Architects

Civil Engineer
Consultant 1 Name

Structural
Matrix Structural Engineers

MEP
DBR

Landscaping
KDC Associates

FIRE STATION #11

CITY OF MIDLAND

Briarwood Ave & Golden Gate Dr
Midland, TX 79707

PROJECT No: MA 18017
DATE: 01/14/2020

ISSUE	Date	Description
100% DESIGN DEVELOPMENT	22-MAY-2019	
75% CONSTRUCTION DOCUMENT	26-JUN-2019	
100% ISSUE FOR PERMIT	30-JUL-2019	
100% ISSUE FOR APPROVAL TO BID	16-JAN-2020	

MECHANICAL DETAILS

M602

DBR
9601 McAllister Freeway, Suite 410
San Antonio, Texas 78216
210.546.0200 v 210.546.0201 f
TBPE Firm Registration NO. 2234

DBR Project Number 196024.000

JC	BV	CL	WJ	MC

4.1450

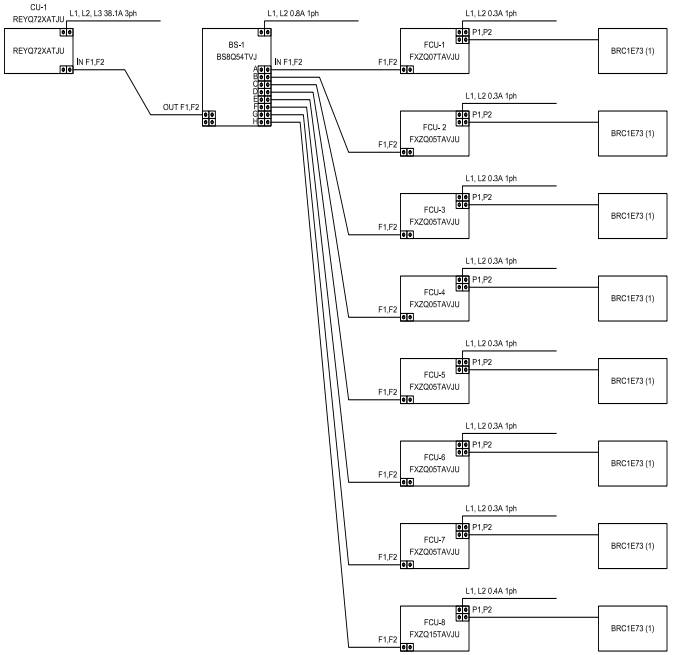

1 M603 **VRF WIRING SCHEMATIC**
NOT TO SCALE

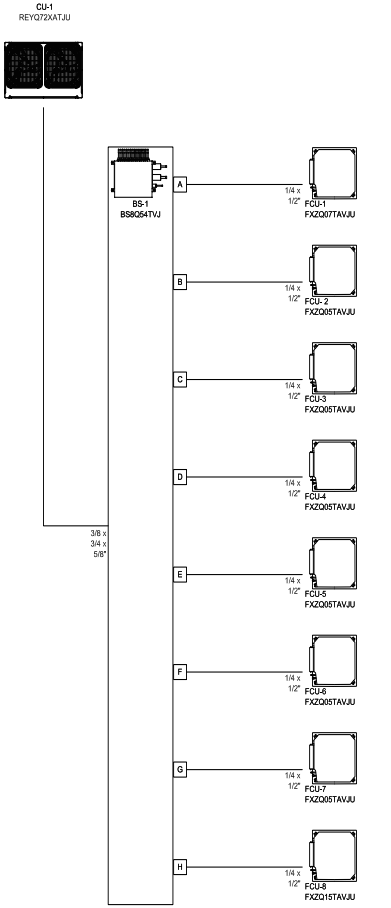

2 M603 **VRF PIPING SCHEMATIC**
NOT TO SCALE

DBR
9601 McAllister Freeway, Suite 410
San Antonio, Texas 78216
210.546.0200 v 210.546.0201 f
TBPE Firm Registration NO. 2234

DBR Project Number 196024.000

JC	BV	CL	WJ	MC

PROFESSIONAL SEAL

NOT FOR CONSTRUCTION OR PERMITTING; PRINTED FOR REVIEW ONLY
01/14/2020
M. JACQUELINE CHANG, P.E.
TEXAS #124997

martinez ARCHITECTS
Martinez Architect, LP
900 Rockmead, Suite 250
Houston, Texas 77339
281.346.7371

DESIGN TEAM

Architectural
Martinez Architects

Civil Engineer
Consultant 1 Name

Structural
Matrix Structural Engineers

MEP
DBR

Landscaping
KDC Associates

FIRE STATION #11

CITY OF MIDLAND
Briarwood Ave & Golden Gate Dr
Midland, TX 79707

PROJECT No: MA 18017
DATE: 01/14/2020

ISSUE	Date	Description
100% DESIGN DEVELOPMENT	22-MAY-2019	
75% CONSTRUCTION DOCUMENT	26-JUN-2019	
100% ISSUE FOR PERMIT	30-JUL-2019	
100% ISSUE FOR APPROVAL TO BID	16-JAN-2020	

MECHANICAL
VRF DIAGRAMS

M603

4.1451

ABBREVIATIONS

A

A	AMPERES
ABV	ABOVE
A/C	AIR CONDITIONING
AC	ALTERNATING CURRENT, AIR COMPRESSOR, ABOVE COUNTER
ACC	AIR COOLED CHILLER
ACCU	AIR COOLED CONDENSING UNIT
AD	ACCESS DOOR
ADA	AMERICANS WITH DISABILITIES ACT
AF	AMPERE FUSE, AMPERE FRAME
AFC	ABOVE FINISHED CEILING
AFF	ABOVE FINISHED FLOOR
AFG	ABOVE FINISHED GRADE
AHU	AIR HANDLING UNIT
AIC	AMPERE INTERRUPT CAPACITY
AL	ALUMINUM
AM	AMMETER
AMP	AMPLIFIER
ANN	ANNUNCIATOR
AP	ACCESS PANEL, ALARM PANEL
ARCH	ARCHITECT, ARCHITECTURAL
ASC	AMPERES SHORT CIRCUIT
AT	AMPERE TRIP RATING
ATS	AUTOMATIC TRANSFER SWITCH
AVG.	AVERAGE
AUX.	AUXILIARY
AWG.	AMERICAN WIRE GAUGE

B

BAS	BUILDING AUTOMATION SYSTEM
BC	BELOW COUNTER
BKR	BREAKER
BLDG.	BUILDING

C

C	CONDUIT, CELSIUS
CATV	CABLE TELEVISION SYSTEM
CCTV	CLOSED CIRCUIT TELEVISION
CWP	CONDENSER WATER PUMP
CH	CHILLER
CHP	CHILLED WATER PUMP
CIRC	CIRCULATING
CKT	CIRCUIT
CL	CENTERLINE
CLG.	CEILING
CMU	CONCRETE MASONRY UNIT
COL.	COLUMN
CONC	CONCRETE
CONN	CONNECTION
CONT.	CONTINUOUS,CONTINUATION
CONTR.	CONTROLLER, CONTRACTOR
CP.	CIRCULATING PUMP
CPUC	CPU CHILLER
CR	CARD READER, CORD REEL
CRU	CONDENSATE RETURN UNIT
CT	CURRENT TRANSFORMER, COOLING TOWER
CTR	CENTER
CU	COPPER

D

dB	DECIBEL
DC	DIRECT CURRENT
DDC	DIRECT DIGITAL CONTROL
DTL	DETAIL
DIA	DIAMETER
DIM	DIMENSION
DISC	DISCONNECT
DN	DOWN
DP	DISTRIBUTION PANEL
DPDT	DOUBLE-POLE, DOUBLE-THROW
DPST	DOUBLE-POLE, SINGLE-THROW
DR	DROPPED RECEPTACLE
DS	DAYLIGHT SENSOR
DW	DISHWASHER
DWG	DRAWING
DWH	DOMESTIC WATER HEATER
DWP	DOMESTIC WATER PUMP
DZ	DAYLIGHT ZONE

E

(E)	EXISTING
EA	EACH
EC	ELECTRICAL CONTRACTOR
E.C.	EMPTY CONDUIT
EDF	ELECTRIC DRINKING FOUNTAIN
EF	EXHAUST FAN
EFF	EFFICIENCY
EHC	ELECTRIC HEATING COIL
EJ	EXPANSION JOINT
EL	ELEVATION
ELEC.	ELECTRICAL
ELEV.	ELEVATOR
EMCS	ENERGY MANAGEMENT AND CONTROLS SYSTEM
EMERG	EMERGENCY
EMS	ENERGY MANAGEMENT SYSTEM
ENCL.	ENCLOSURE
ENGR	ENGINEER
EPO	EMERGENCY POWER OFF
EQUIP	EQUIPMENT
(ER)	EXISTING TO REMAIN
EUH	ELECTRIC UNIT HEATER
EWH	ELECTRIC WATER HEATER
EXH	EXHAUST

F

F	FAHRENHEIT, FAN, FIRE
FA	FIRE ALARM
FACP	FIRE ALARM CONTROL PANEL
FCU	FAN COIL UNIT
FF	FURNITURE FEED
FIXT	FIXTURE
FLA	FULL LOAD AMPS
FLEX	FLEXIBLE
FLR	FLOOR
FLUOR	FLUORESCENT
FP	FIRE PUMP, FAN POWERED
FPTB	FAN POWERED TERMINAL BOX
FRZ	FREEZER
FS	FUSED SWITCH, FLOW SWITCH
FSD	MOTORIZED FIRE SMOKE DAMPER
FT	FOOT, FEET
FTL	FEED-THRU LUGS
FUT	FUTURE
FVNR	FULL-VOLTAGE, NON-REVERSING

G

GA	GAUGE
GAL	GALLON
GALV	GALVANIZED
GC	GENERAL CONTRACTOR
GEN	GENERATOR
GFCI	GROUND FAULT CIRCUIT INTERRUPTER
GND	GROUND
GTD	GENERATOR TRANSFER DEVICE
GUH	GAS UNIT HEATER

H

HACR	HEATING, AIR CONDITIONING RATED CIRCUIT BREAKER
HD	ELECTRIC HAND DRYER
HID	HIGH INTENSITY DISCHARGE
HOA	HAND-OFF-AUTOMATIC
HORIZ	HORIZONTAL
HP	HORSEPOWER
HPS	HIGH PRESSURE SODIUM
HS	HAND SET
HSC	HAND SCANNER
HTG	HEATING
HTR	HEATER
HVAC	HEATING, VENTILATING, AND AIR CONDITIONING
HVU	HEATING/ VENTILATING UNIT
HWB	HOT WATER BOILER
HWC	HOT WATER CIRCULATOR
HWP	HEATING WATER PUMP
HZ	HERTZ

I

ID	INSIDE DIAMETER
IG	ISOLATED GROUND
IN	INCH
INCAND	INCANDESCENT
INT	INTERNAL, INTERIOR

J

JB	JUNCTION BOX
JP	JOCKEY PUMP

K

KEC	KITCHEN EQUIPMENT CONTRACTOR
KO	KNOCKOUT
kVA	KILOVOLT- AMPS
kW	KILOWATT
kWH	KILOWATT-HOUR

L

LED	LIGHT EMITTING DIODE
LF	LINEAR FEET
LRA	LOCKED ROTOR AMPS
LTG	LIGHTING
LV	LOW VOLTAGE TRANSFORMER
LVL	LEVEL

M

	METER
MAP	MASTER ALARM PANEL
MATV	MASTER ANTENNA TELEVISION SYSTEM
MAX.	MAXIMUM
MC	METAL CLAD CABLE
MCA	MINIMUM CIRCUIT AMPS
MCB	MAIN CIRCUIT BREAKER
MCC	MOTOR CONTROL CENTER
MD	MOTORIZED DAMPER
MDP	MAIN DISTRIBUTION PANEL
MECH.	MECHANICAL
MFR	MANUFACTURER
MH	METAL HALIDE
MIC	MICROPHONE
MIN.	MINIMUM
MLO	MAIN LUGS ONLY
MOCP	MAXIMUM OVER-CURRENT PROTECTION
MSB	MAIN SWITCHBOARD
MTD	MOUNTED
MV	MERCURY VAPOR

N

N3R	NEMA 3R ENCLOSURE
N4X	NEMA 4X ENCLOSURE
N.C.	NORMALLY CLOSED
NEC	NATIONAL ELECTRICAL CODE
NEMA	NATIONAL ELECTRICAL MANUFACTURER'S ASSOCIATION
NF	NON-FUSED
NFPA	NATIONAL FIRE PROTECTION ASSOCIATION
NFS	NON-FUSED SWITCH
NIC	NOT IN CONTRACT
NL	NIGHT LIGHT
N.O.	NORMALLY OPEN
NO.	NUMBER
NTS	NOT TO SCALE

O

OAF.	OUTSIDE AIR FAN
OAHU	OUTSIDE AIR HANDLING UNIT
OC	ON CENTER
OD	OUTSIDE DIAMETER
OHE	OVERHEAD ELECTRICAL
OPG	OPENING

P

	POLE, PUMP
PB	PUSHBUTTON
PC	PHOTOCELL
PH	PHASE
PL	PILOT LIGHT
PLBG	PLUMBING
PNEU	PNEUMATIC
PNL	PANEL
POS	POINT OF SALE
PP	POWER POLE
PR	PAIR
PRI	PRIMARY
PS	PHOTOSENSOR
PVC	POLYVINYL CHLORIDE
PWR	POWER

Q

QTY	QUANTITY

R

R	EXISTING TO BE REMOVED
RA	RETURN AIR
RAD	REFRIGERATED AIR DRYER
RAF	RETURN AIR FAN
RC	RECONNECT EXISTING DEVICE TO CIRCUIT INDICATED
RCP	REFLECTED CEILING PLAN
RCPT	RECEPTACLE
RE	REFERENCE, REFER
REC	RECEPTACLE
REF	REFRIGERATOR
REINF	REINFORCING
REL	EXISTING TO BE RELOCATED
RELIEX	NEW LOCATION OF RELOCATED EQUIPMENT
REQD	REQUIRED
REV	REVISION, REVISE
RGS	RIGID GALVANIZED STEEL
RLA	RUNNING LOAD AMPS
RPM	REVOLUTIONS PER MINUTE
RR	REMOVE AND REPLACE
RTU	ROOFTOP UNIT

S

SA	SUPPLY AIR
SAF	SUPPLY AIR FAN
SCHED	SCHEDULE
SE	SEWAGE EJECTOR
SEC	SECONDARY
SECT	SECTION
SF	SQUARE FEET
SHT	SHEET
SIM	SIMILAR
SKVA	STARTING KILOVOLT-AMPS
SKW	STARTING KILOWATTS
SP	SUMP PUMP
SPEC	SPECIFICATION
SPF	STAIR PRESSURIZATION FAN
SPKR	SPEAKER
SPD	SURGE PROTECTION DEVICE
SPDT	SINGLE-POLE, DOUBLE-THROW
SPST	SINGLE-POLE, SINGLE-THROW
SQ.	SQUARE
SRF	SMOKE REMOVAL FAN
SS	START-STOP PUSH BUTTON
SSSC	SOLID STATE SPEED CONTROL
ST	SHUNT TRIP
STB	STEAM BOILER
STD	STANDARD
STL	STEEL
SURF	SURFACE
SW	SWITCH
SWBD	SWITCHBOARD

T

TC	TEMPERATURE CONTROL
TEL	TELEPHONE
TF	TRANSFER FAN
TL	TWIST-LOCK
TOC	TOP OF CURB
TOS	TOP OF STEEL
TP	CHILD TAMPER PROOF DEVICE
TSTAT	THERMOSTAT
TTB	TELEPHONE TERMINAL BOARD
TTC	TELEPHONE TERMINAL CABINET
TU	TERMINAL UNIT
TV	TELEVISION
TVSS	TRANSIENT VOLTAGE SURGE SUPPRESSOR
TYP	TYPICAL

U

UG	UNDERGROUND
UH	UNIT HEATER
UL	UNDERWRITERS LABORATORIES, INC.
UNO	UNLESS NOTED OTHERWISE
UPS	UNINTERRUPTABLE POWER SYSTEM

V

V	VOLT
VA	VOLT-AMPERE
VAV	VARIABLE AIR VOLUME
VC	VOLUME CONTROL
VERT	VERTICAL
VFD	VARIABLE FREQUENCY DRIVE
VP	VACUUM PUMP
VM	VOLT METER

W

W	WATT, WIRE, WIDTH
WG	WIREGUARD
W/	WITH
W/O	WITHOUT
WP	WEATHERPROOF
WS	WATER SOFTENER
WT	WATERTIGHT, WEIGHT
WWF	WELDED WIRE FABRIC
W/FT^2	WATTS PER SQUARE FOOT

X

XFMR	TRANSFORMER

Z

Z	ZONE

ELECTRICAL SYMBOLS

MOTORS AND CONTROLS

- SINGLE OR THREE PHASE MOTOR NUMBER INDICATES HORSE POWER
- ELECTRIC DUCT HEATER
- DISCONNECT (SAFETY) SWITCH "200/3/150" DENOTES AMPERES/POLE/FUSE, "NF" DENOTES NON-FUSED "N3R" DENOTES NEMA 3R
- ENCLOSED CIRCUIT BREAKER- "200/3/150" DENOTES AMPERES/POLE/TRIP.
- MOTOR STARTER FURNISHED BY DIVISION 23 AND INSTALLED BY DIVISION 26.
- COMBINATION DISCONNECT (SAFETY) SWITCH AND MOTOR STARTER, "30/3/15/80" DENOTES AMPERES/POLES/FUSE/ STARTER SIZE, "NF" DENOTES NON-FUSED. FURNISHED BY DIVISION 23 AND INSTALLED BY DIVISION 26.
- VFD / EPO — VARIABLE FREQUENCY DRIVE PROVIDED BY DIVISION 23 AND INSTALLED BY DIVISION 26.
- EMERGENCY POWER OFF BUTTON.

RECEPTACLES AND OUTLETS

ALL RECEPTACLES SHALL BE MOUNTED 18" ABOVE FINISHED FLOOR TO CENTER OF DEVICE UNLESS NOTED OTHERWISE.

- SIMPLEX WALL RECEPTACLE, NEMA 5-20R, 20A, 125V.
- DUPLEX WALL RECEPTACLE, NEMA 5-20R, 20A, 125V.
  - "GFCI" DENOTES GROUND FAULT INTERRUPTER,
  - "WP" DENOTES WEATHERPROOF,
  - "IG" DENOTES ISOLATED GROUND,
  - "TP" DENOTES SAFETY TYPE, (TAMPER PROOF)
  - "DR" DENOTES DROPPED RECEPTACLE,
  - "USB" DENOTES RECEPTACLE WITH UNIVERSAL SERIAL BUS,
  - "AC" DENOTES ABOVE COUNTER MOUNTING, SEE
  - "UC" DENOTES UNDER COUNTER MOUNTING, SEE
  - "H" DENOTES HORIZONTALLY ORIENTED RECEPTACLE, SEE ARCHITECTURAL PLANS FOR EXACT MOUNTING HEIGHT.
- DUPLEX WALL RECEPTACLE ON EMERGENCY CIRCUIT, RED COLOR.
- DUPLEX WALL RECEPTACLE ON A CIRCUIT DEDICATED TO DATA PROCESSING, GRAY COLOR. PROVIDE ISOLATED GROUND TYPE RECEPTACLES WHERE NOTED.
- SPLIT WIRED RECEPTACLE. TOP RECEPTACLE SHALL BE SWITCHED ACCORDING TO PLANS, AND BOTTOM SHALL REMAIN UNSWITCHED.
- SP — CONTROLLED DUPLEX WALL RECEPTACLE, NEMA 5-20R, 20A, 125V. "SP" DENOTES SPLIT WIRED
- FOURPLEX (DOUBLE DUPLEX) WALL RECEPTACLE. NEMA 5-20R, 20A, 125V.
- FOURPLEX WALL RECEPTACLE ON EMERGENCY CIRCUIT, RED COLOR.
- CONTROLLED FOURPLEX (DOUBLE DUPLEX) WALL RECEPTACLE. NEMA 5-20R, 20A, 125V.
- SPECIAL RECEPTACLE, NEMA CONFIGURATION AS NOTED.
- FLUSH ELECTRICAL FLOOR OUTLET, "F" DENOTES POKE-THRU "D" INDICATES DUPLEX RECEPTACLE, "R" INDICATES RED RECEPTACLE ON EMERGENCY POWER. REFER TO FLOOR BOX SCHEDULE, FIRE RATED POKE-THROUGH SCHEDULE AND KEYED NOTES.
- MULTI-OUTLET SURFACE RACEWAY. SEE ARCHITECTURAL DRAWINGS FOR EXACT MOUNTING HEIGHTS.
- JUNCTION BOX
  - "MD" DENOTES MOTOR DAMPER,
  - "CR" DENOTES CORD REEL,
  - "D" DENOTES DROP CORD RECEPTACLE,
- DUPLEX RECEPTACLE WITH HOMERUN
- DUPLEX RECEPTACLE (PEDESTAL MOUNTED)
- TWO-GANG CEILING OUTLET
- TWO-GANG FLOOR OUTLET
- THREE-GANG FLOOR OUTLET
- POWER POLE
- DIRECT CONNECTION TO EQUIPMENT
- PULL BOX (OVER 4" SQUARE)
- CLOCK RECEPTACLE TO BE MOUNTED 12" BELOW FINISHED CEILING. (2) DENOTES DOUBLE SIDED CLOCK.

LIGHTING

LETTER(S) DENOTE TYPE- SEE LIGHTING FIXTURE SCHEDULE FOR ADDITIONAL INFORMATION.

- 2' X 4' LIGHTING FIXTURE.
- 2' X 2' LIGHTING FIXTURE.
- 1' X 4' LIGHTING FIXTURE.
- 1' X 2' LIGHTING FIXTURE.
- 1' X 1' LIGHTING FIXTURE.
- STRIP LIGHTING FIXTURES.
- STAGGERED STRIP LIGHTING FIXTURE.
- ROUND DOWNLIGHT FIXTURE.
- SQUARE DOWNLIGHT FIXTURE.
- WALL MOUNTED LIGHTING FIXTURE.
- TRACK LIGHTING FIXTURE. MOUNTED AS SHOWN ON LIGHTING FIXTURE SCHEDULE.
- CEILING MOUNTED EXIT SIGN; ARROWS AS INDICATED. SHADED AREA DENOTES FACE.
- WALL MOUNTED EXIT SIGN; ARROWS AS INDICATED. SHADED AREA DENOTES FACE.
- EMERGENCY WALL MOUNTED LIGHTING FIXTURE. BATTERY OPERATED UNLESS NOTED OTHERWISE.
- SECURITY WALL PACK
- SITE LIGHTING FIXTURE.
- POST-TOP FIXTURE/ACORN FIXTURE. BRACKET ARM INDICATES WALL MOUNT WITH ARM
- EMERGENCY LIGHT FIXTURE WITH BATTERY PACK. PROVIDE WITH UNSWITCHED HOT FOR LOSS OF VOLTAGE AND CHARGING (SAME CIRCUIT AS NORMAL POWER LIGHTING). FIXTURES SHALL BE WIRED IN A MANNER AS TO ALLOW SWITCHING OF FIXTURES WITHOUT DISCHARGING THE EMERGENCY BATTERY. BATTERY PACK IS TO ONLY OPERATE IN THE EVENT OF A POWER OUTAGE.
- EM CIRCUIT — LIGHT FIXTURE ON EMERGENCY BRANCH CIRCUIT. CIRCUIT NUMBER ADJACENT TO FIXTURE INDICATES EMERGENCY CIRCUIT CONNECTED TO FIXTURE. PROVIDE UNSWITCHED HOT, NEUTRAL AND GROUND FOR ALL EMERGENCY LIGHTING ORIGINATING FROM THE EMERGENCY CIRCUIT SHOWN.
- NL — EMERGENCY "NIGHT LIGHT" LIGHT FIXTURE. LIGHT FIXTURE IS UNSWITCHED AND INTENDED FOR 24 HOUR OPERATION. FEED VIA UNSWITCHED HOT.

DAYLIGHT ZONE/PRIMARY DAYLIGHT ZONE

SECONDARY DAYLIGHT ZONE

RACEWAYS AND WIRING

- CAP AND STAKE
- CONDUIT CONCEALED IN WALL OR CEILING
- CONDUIT UNDERSLAB OR UNDERGROUND
- EM — EMERGENCY CONDUIT
- EXPOSED CONDUIT
- DB — UNDERGROUND CONDUIT, "DB" DENOTES DUCTBANK ENCASED IN CONCRETE
- OHE — OVERHEAD ELECTRIC PRIMARY UTILITY POWER LINE
- CONDUIT TURNED UP
- CONDUIT TURNED DOWN
- HASH MARKS INDICATE NUMBER OF CONDUCTORS. LEFT TO RIGHT-PHASE/NEUTRAL/SWITCH LEG/GROUND/ISOLATED GROUND. NO HASH MARKS INDICATES 2# 12, PLUS GROUND, UNLESS NOTED OTHERWISE.
- LA-2,4 — HOMERUN TO PANEL WITH CIRCUIT NUMBER(S) AS INDICATED.
- PARTIAL CIRCUIT HOMERUN TO PANEL.
- (ON)LA-6 — COMMUNICATIONS CONDUIT OR CABLE:
  - "CL" DENOTES MASTER CLOCK,
  - "CR" DENOTES CASH REGISTER
  - "D" DENOTES DATA,
  - "FA" DENOTES FIRE ALARM,
  - "I" DENOTES INTERCOM,
  - "OHE" DENOTES OVERHEAD ELECTRICAL LINE.
  - "PA" DENOTES PAGING,
  - "S" DENOTES SECURITY,
  - "T" DENOTES TELEPHONE,
  - "V" DENOTES VIDEO.
- TELECOMMUNICATIONS CABLE TRAY TO BE CONCEALED ABOVE ACCESSABLE CEILING.

ELECTRICAL EQUIPMENT

- DISTRIBUTION PANEL
- MSB — SWITCHBOARD, MAIN DISTRIBUTION PANEL OR MOTOR CONTROL CENTER
- PANELBOARD (FLUSH/SURFACE MOUNT)
- FLOOR MOUNTED DRY-TYPE TRANSFORMER
- SUSPENDED OR WALL MOUNTED TRANSFORMER
- ATS — AUTOMATIC TRANSFER SWITCH
- FIRE RATED PLYWOOD TERMINAL BOARD. TYPE AS NOTED, 4' X 8' X 3/4" UNLESS NOTED OTHERWISE
- TERMINAL CABINET (FLUSH/SURFACE MOUNT), TYPE AS NOTED, 24" X 48" X 3-1/2" UNLESS NOTED OTHERWISE.
- BAT — BATTERY/INVERTER UNIT
- LV — LOW VOLTAGE TRANSFORMER.

COMMUNICATIONS

ALL OUTLET BOXES SHALL BE MOUNTED 18" ABOVE FINISHED FLOOR TO CENTER OF DEVICE UNLESS NOTED OTHERWISE.

THE FOLLOWING NOTATIONS REFER TO ALL COMMUNICATIONS OUTLETS:
"FAX" DENOTES OUTLET DEDICATED FOR A FAX,
"W" DENOTES WALL PHONE SHALL BE MOUNTED AT 42" A.F.F.
"PAY" DENOTES PAY PHONE SHALL BE MOUNTED AT 42" A.F.F.

- HS — SCHOOL INTERCOMMUNICATION SYSTEM HANDSET.
- INDICATES THE LOCATION OF A NEW TECHNOLOGY WALL OUTLET, PROVIDE DUAL GANG BACK BOX. REFERENCE TECHNOLOGY SHEET FOR CONTENT.
- M — MICROPHONE FLOOR OUTLET, "W" INDICATES WALL MOUNTED, "F" INDICATES FLOOR MOUNTED, "H" INDICATES HANGING MOUNTED
- VC — CEILING MOUNTED SPEAKER. "VC" INDICATES VOLUME CONTROL ON SPEAKER.
- L — WALL MOUNTED SPEAKER. "L" INDICATED LOCAL SOUND REINFORCEMENT
- CB — SCHOOL INTERCOMMUNICATION SYSTEM CALL-IN. PUSH BUTTON
- BELL, BUZZER OR CHIME AT 80+ A.F.F.
- VC — VOLUME CONTROL - WALL MOUNTED
- AX — AUXILIARY INPUT JACK. "W" INDICATES WALL MOUNTED, "F" INDICATES FLOOR MOUNTED, "H" INDICATES HANGING MOUNTED
- AVO — "HIGH" PORTION OF "HIGH/LOW" OUTLETS, REFER TO OUTLET DETAIL.
- AVI — "LOW" PORTION OF "HIGH/LOW" OUTLETS, REFER TO OUTLET DETAIL.
- (2) LV — CEILING RECEPTACLE TO BE MOUNTED 12" BELOW FINISHED CEILING. (2) DENOTES DOUBLE SIDED CLOCK.

REFERENCE TECHNOLOGY/SECURITY SHEET FOR ADDITIONAL INFORMATION.

ONE LINE AND RISER DIAGRAMS

- TRANSFORMER, TYPE AND RATINGS AS NOTED
- 800A/3P — SWITCH, RATING AS SHOWN
- 400A — FUSE, RATING AS SHOWN
- CL — CIRCUIT BREAKER, RATING AS SHOWN, 3 POLE UNLESS NOTED OTHERWISE. "CL" DENOTES CURRENT LIMITING
- DRAWOUT CIRCUIT BREAKER, RATINGS AS SHOWN, 3 POLE UNLESS NOTED OTHERWISE
- ST — SHUNT TRIP
- GF — GROUND FAULT RELAY
- K — KIRK-KEY INTERLOCK
- M — DIGITAL METER
- A 0-2000 — AMMETER, RANGE AS SHOWN
- AS — AMMETER SWITCH
- V 0-600 — VOLTMETER, RANGE AS SHOWN
- VS — VOLTMETER SWITCH
- WH D-15 — WATT-HOUR METER, "D" DENOTES DEMAND REGISTER "15" DENOTES MINUTES OF DEMAND INTERVAL
- 1200/5 — CURRENT TRANSFORMER, RATED AS SHOWN
- 12.47KV/120V — POTENTIAL TRANSFORMER, RATING AS SHOWN
- GROUND CONNECTION
- LIGHTING ARRESTOR
- G — GENERATOR SET
- AUTOMATIC TRANSFER SWITCH
- BUS DUCT PLUG
- TVSS — TRANSIENT VOLTAGE SURGE SUPPRESSOR
- ELECTRICAL METER
- SPD — SURGE PROTECTION DEVICE

MISCELLANEOUS

- F — SHADED SYMBOLS INDICATE EXISTING DEVICES TO REMAIN, UNLESS OTHERWISE NOTED.
- INDICATES WALL-MOUNTED WHEN ATTACHED TO ANY SYMBOL
- 1 — DRAWING NOTE REFERENCE
- 1 — STARTER/DISCONNECT SCHEDULE REFERENCE
- 1 — FEEDER SCHEDULE REFERENCE
- LC — LIGHTING CONTACTOR
- TS — TIME SWITCH
- PC — PHOTOCELL
- PUSH BUTTON/DOOR BELL
- TC — TIMECLOCK
- R — RELAY
- SOS — AREA OF RESCUE ASSISTANCE
- B — BELL

FIRE ALARM

- W — WATER FLOW SWITCH
- SP — SUPERVISORY SWITCH
- S — SMOKE DETECTOR - MULTI CRITERIA DETECTOR
- S# — SMOKE DETECTOR - "D" INDICATES IN DUCT TYPE, "135HZ" INDICATES LOW FREQUENCY SOUNDER BASE, "AC" INDICATES ABOVE CEILING, "CO" INDICATES COMBINATION CARBON MONOXIDE
- H — HEAT DETECTOR
- H# — HEAT DETECTOR - "CO" INDICATES COMBINATION CARBON MONOXIDE
- S — FIRE ALARM SPEAKER / CEILING MOUNT.
- S — FIRE ALARM SPEAKER STROBE / CEILING MOUNTED
- S — FIRE ALARM SPEAKER STROBE / WALL MOUNTED
- S — FIRE ALARM SPEAKER / WALL MOUNTED
- DH — MAGNETIC DOOR HOLDER
- R — AUXILIARY CONTROL RELAY
- F — FIRE ALARM PULL STATION +42" AFF
- F — FIREMAN'S TELEPHONE JACK +42" AFF
- AUDIO VISUAL FIRE ALARM HORN STROBE +80" AFF- 15/75cd U.N.O.
- VISUAL FIRE ALARM (STROBE) CEILING MOUNT - 15/75cd U.N.O.
- VISUAL FIRE ALARM (STROBE) WALL MOUNT +80" AFF- 15/75cd U.N.O.
- AUDIO FIRE ALARM HORN +80" AFF
- FACP — FIRE ALARM CONTROL PANEL
- ANN — REMOTE FIRE ALARM ANNUNCIATOR PANEL
- FH — FIRE FIGHTER HANDSET
- RPS — REMOTE POWER SUPPLY FOR AUDIO/VISUAL FIRE ALARM DEVICES.
- FSD — FIRE SMOKE DAMPER
- REMOTE LED INDICATOR LIGHT

SECURITY

- KP — KEYPAD
- IDP — INTRUSION DETECTION PANEL
- GB — GLASS BREAK SENSOR
- DC — DOOR CONTACT
- HP — HOLD UP BUTTON
- ADB — ADA AUTO DOOR OPEN BUTTON
- DS — INTERCOM DOOR STATION
- DR — DOOR RELEASE BUTTON
- MS — INTERCOM MASTER STATION
- CR — CARD READER
- LONG RANGE MOTION DETECTOR
- WCR — WALL MOUNTED CARD READER
- WALL MOUNTED MOTION DETECTOR
- CEILING MOUNTED MOTION DETECTOR

REFERENCE TECHNOLOGY/SECURITY SHEET FOR ADDITIONAL INFORMATION.

SWITCHES/CONTROLS

ALL WALL SWITCHES SHALL BE MOUNTED AT 42" ABOVE FINISHED FLOOR TO CENTER OF DEVICE UNLESS NOTED OTHERWISE.

- SWITCH, SPST, 20A, 120/277V.
- 3 — SWITCH, 20A, 120/277V.
  - "2" DENOTES THREE-WAY
  - "4" DENOTES FOUR-WAY
  - "K" KEY SWITCH
  - "P" PILOT LIGHT
  - "T" SPRING WOUND TIMER
  - "R" DENOTES RED
  - "F" DENOTES FAN SPEED CONTROLLER
  - "OC" DENOTES OCCUPANCY SENSOR SWITCH
  - "LV" DENOTES LOW VOLTAGE SWITCH, USED WITH ROOM CONTROLLERS
- D — DIMMER CONTROL SWITCH, LINE VOLTAGE, 1000 WATT UNLESS OTHERWISE NOTED.
- 3K — THREE-WAY KEY SWITCH, 20A, 120/277V.
- M — MOTOR RATED SWITCH WITH THERMAL OVERLOADS
- OC1 — CEILING MOUNTED OCCUPANCY SENSOR
- OC2 — CEILING MOUNTED OCCUPANCY SENSOR (HIGH BAY)
- DS — DAYLIGHT/PHOTO SENSOR
- RC — ROOM CONTROLLER

REFER TO LIGHTING CONTROL DEVICE SCHEDULE ON SHEET E5.01 FOR MORE INFORMATION

DRAWING/DETAIL REFERENCE KEY

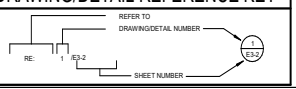

GENERAL NOTES:

A. NOT ALL SYMBOLS SHOWN ON THIS SYMBOL LIST ARE USED IN THE CONTRACT DOCUMENTS.

DBR
9601 McAllister Freeway, Suite 410
San Antonio, Texas 78216
210.546.0200 v 210.546.0201 f
TBPE Firm Registration No. 2234

DBR Project Number 196024.000

JC	BV	CL	WJ	MC

PROFESSIONAL SEAL

NOT FOR CONSTRUCTION OR PERMITTING; PRINTED FOR REVIEW ONLY
01/14/2020
M. JACQUELINE CHANG, P.E.
TEXAS #124587

martinez ARCHITECTS
Martinez Architect, LP
900 Rockmead, Suite 250
Houston, Texas 77339
281.346.7371

DESIGN TEAM

Architectural
Martinez Architects

Civil Engineer
Maverick Engineering

Structural
Matrix Structural engineers

MEP/FP/T
DBR

Landscape Architect
KDC Associates

Consultant 5 Discipline Type
Consultant 5 Name

FIRE STATION #11
CITY OF MIDLAND
6600 BRIARWOOD AVE
MIDLAND, TX 79707

PROJECT No: **MA 18017**
DATE: **01/14/2020**

ISSUE	Date	Description
100% DESIGN DEVELOPMENT	22-MAY-2019	
75% CONSTRUCTION DOCUMENT	26-JUN-2019	
100% ISSUE FOR PERMIT	30-JUL-2019	
100% ISSUE FOR APPROVAL TO BID	16-JAN-2020	

ELECTRICAL SYMBOL LEGEND

E001

4.1452

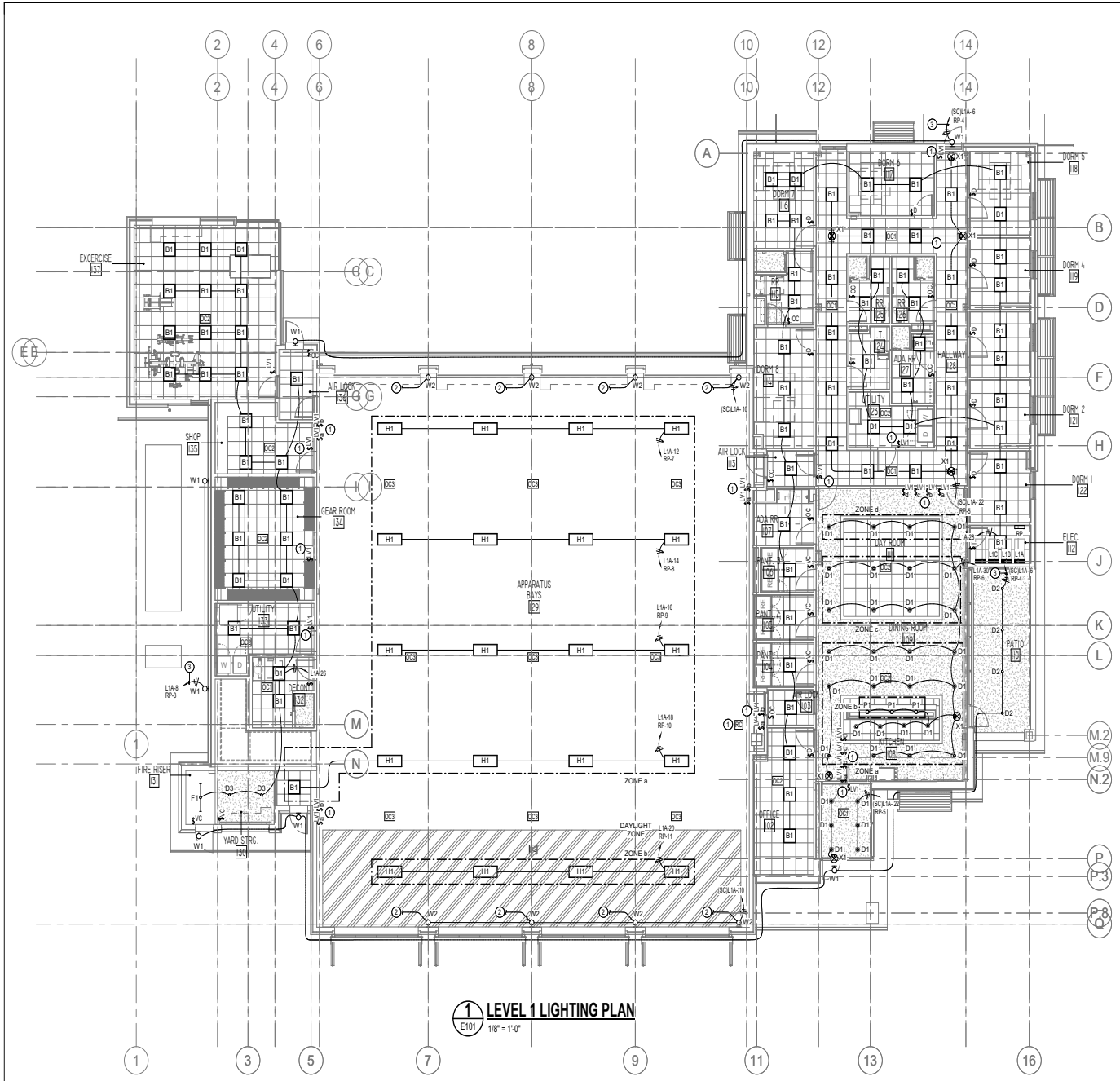

1 E101 **LEVEL 1 LIGHTING PLAN**
1/8" = 1'-0"

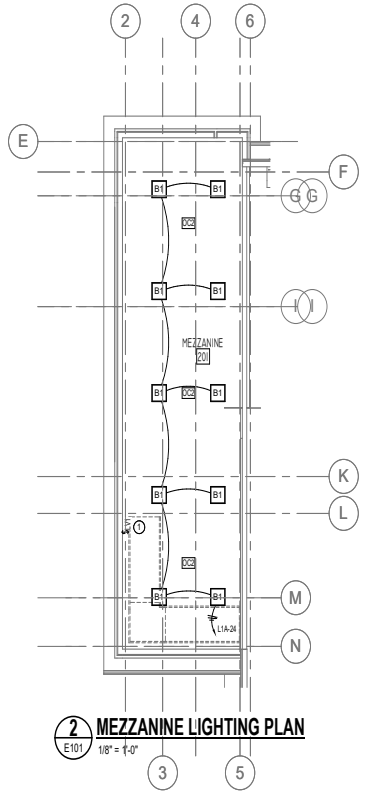

2 E101 **MEZZANINE LIGHTING PLAN**
1/8" = 1'-0"

LIGHTING GENERAL NOTES

A. ALL CEILING MOUNTED OCCUPANCY SENSORS SHALL BE WATTSTOPPER #DT-300. PROVIDE #BZ-150 UNIVERSAL VOLTAGE POWER PACKS AND OVERRIDE SWITCHES AS REQUIRED FOR CONTROL INDICATED. ALL POWER PACKS SHALL BE SET TO MANUAL-ON/AUTO-OFF UNLESS OTHERWISE NOTED.

B. ALL LOW VOLTAGE SWITCHES TAGGED AS "LV" SHALL BE WATTSTOPPER #LVSW-101 UNLESS NOTED OTHERWISE. REFER TO LOW VOLTAGE SWITCH SCHEDULE DETAIL #3/303 FOR ADDITIONAL SWITCH TYPES.

C. ALL WALL MOUNTED OCCUPANCY SENSORS LABELED AS OC SHALL BE WATTSTOPPER #DSW-100. REFER TO LOW VOLTAGE SWITCH SCHEDULE DETAIL 3 ON SHEET E603 FOR ADDITIONAL SWITCH TYPES WHEN NOTED OTHERWISE.

D. ALL CEILING MOUNTED DEVICES LOCATED IN LAY-IN CEILINGS SHALL BE CENTERED IN THE CEILING TILE.

E. MULTIPLE SWITCHES SHOWN TOGETHER SHALL BE GANGED TOGETHER UNDER A COMMON COVER PLATE.

F. CONTRACTOR SHALL INDICATE LIGHTING CIRCUIT SERVING EACH SWITCH BY PROVIDING TYPE WRITTEN LABELING LOCATED ON INSIDE FACE OF EACH SWITCH COVER PLATE.

G. SPRINKLER CONTRACTOR SHALL COORDINATE SPRINKLER HEAD LOCATIONS WITH CEILING MOUNTED LIGHTING FIXTURES.

H. LOWER CASE CHARACTER ADJACENT TO SWITCH AND/OR LIGHTING FIXTURE INDICATES SWITCHING GROUP.

I. ELECTRICAL CONTRACTOR SHALL COORDINATE INSTALLATION OF ALL RECESSED LIGHTING FIXTURES WITH THE CEILING INSTALLER, TO PROVIDE FIRE PROTECTION AS DESCRIBED IN THE UL FIRE RESISTANCE DIRECTORY STANDARD APPROPRIATED TO THE CEILING ASSEMBLY INSTALLED AND FIRE RATING REQUIRE. REFER TO THE ARCHITECTURAL DRAWINGS FOR UL DESIGN NUMBER. REFER TO DETAIL 11 SHEET E302.

LIGHTING KEYED NOTES

1. REFER TO SHEET E501 FOR LIGHTING CONTROL DEVICE INFORMATION.
2. W3 LIGHTING FIXTURE SHALL FLASH WHILE OPERATING WHEN OPENING AND CLOSING ASSOCIATED MOTORIZED DOOR. PROVIDE RELAY AND TIE INTO DOOR CONTROLLER.
3. EXTEND CIRCUIT THROUGH LIGHTING RELAY PANEL "RP" CONTROLLED BY PHOTOCELL AND TIMECLOCK. EXTERIOR LIGHTING SHALL BE PROGRAMMED ACCORDING TO IECC 2015. LIGHTING RELAY PANEL SHALL BE LOCATED NEXT TO ELECTRICAL PANEL SERVING EXTERIOR LIGHTING LOAD.

TRUE NORTH
PROJECT NORTH N

DBR
9601 McAllister Freeway, Suite 410
San Antonio, Texas 78216
210.546.0200 v 210.546.0201 f
TBPE Firm Registration No. 2234

DBR Project Number 196024.000

JC | BV | CL | WJ | MC

PROFESSIONAL SEAL

NOT FOR CONSTRUCTION OR PERMITTING; PRINTED FOR REVIEW ONLY
01/14/2020
M. JACQUELINE CHANG, P.E.
TEXAS #124087

martinez ARCHITECTS
Martinez Architect, LP
900 Rockmead, Suite 250
Houston, Texas 77339
281.346.7371

DESIGN TEAM

Architectural
Martinez Architects

Civil Engineer
Maverick Engineering

Structural
Matrix Structural engineers

MEP/FP/T
DBR

Landscape Architect
KDC Associates

Consultant 5 Discipline Type
Consultant 5 Name

FIRE STATION #11

CITY OF MIDLAND
6600 BRIARWOOD AVE
MIDLAND, TX 79707

PROJECT No: MA 18017
DATE: 01/14/2020

ISSUE	Date	Description
100% DESIGN DEVELOPMENT	22-MAY-2019	
75% CONSTRUCTION DOCUMENT	26-JUN-2019	
100% ISSUE FOR PERMIT	30-JUL-2019	
100% ISSUE FOR APPROVAL TO BID	16-JAN-2020	

LEVEL 1 & MEZZANINE LIGHTING PLAN

E101

4.1453

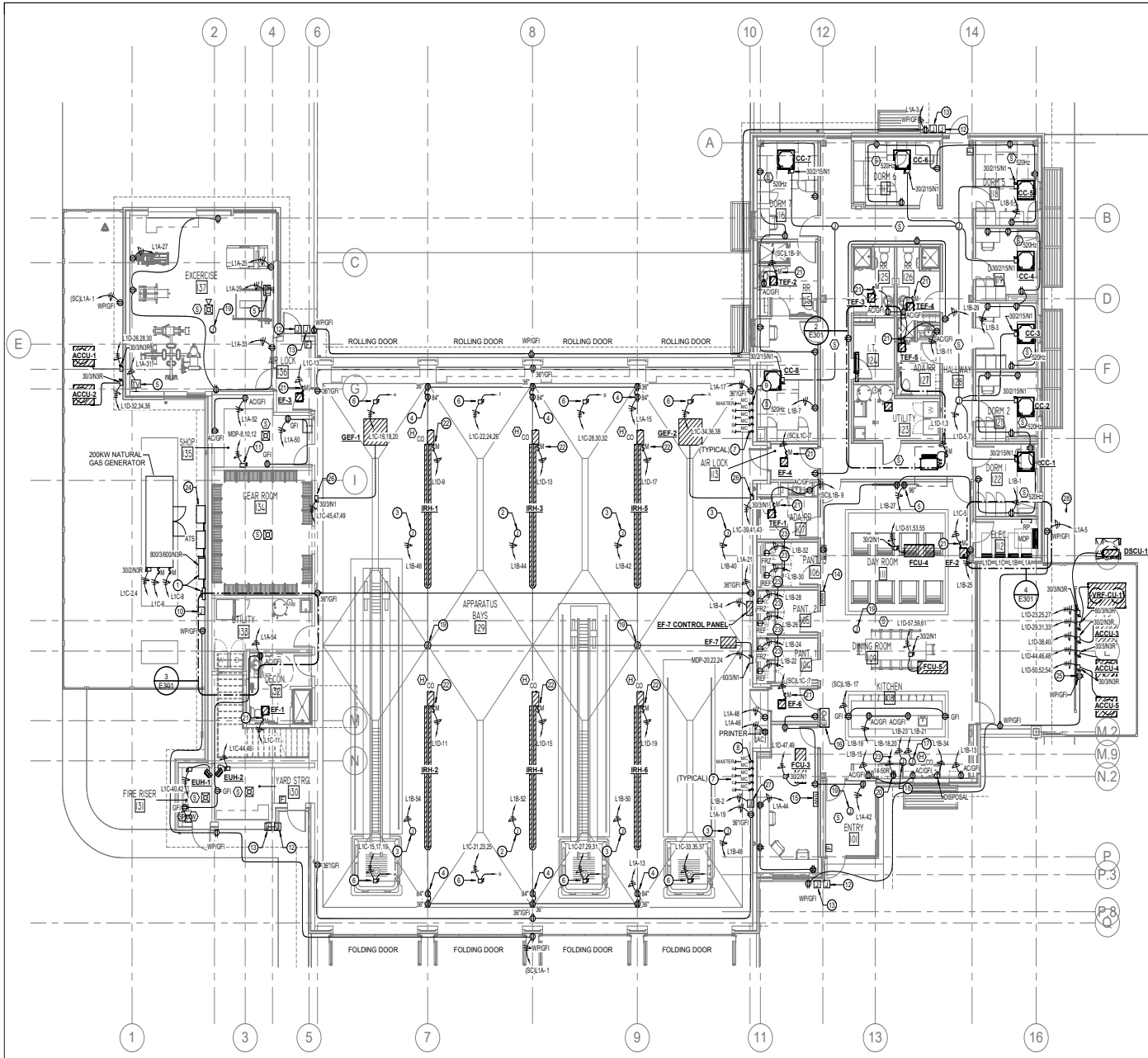

ELECTRICAL KEYED NOTES

1. PROPOSED LOCATION FOR ELECTRICAL SERVICE EQUIPMENT. FIELD COORDINATE INSTALLATION WITH POWER COMPANY, REFER TO ONE LINE DIAGRAM ON SHEET E401 FOR ADDITIONAL INFORMATION.
2. PROVIDE RETRACTABLE POWER CORD REEL WITH 120V 30A RECEPTACLE, FURNISHED WITH PIVOT BASE. PROVIDE DUPLEX RECEPTACLE AT CORD REEL BASE. FIELD COORDINATE EXACT LOCATION, CABLE LENGTH AND ADDITIONAL REQUIREMENTS WITH ARCHITECT/OWNER PRIOR TO ROUGH-IN. PROVIDE WITH QUICK RELEASE PLUG. RE 4/E6.02.
3. PROVIDE RETRACTABLE POWER CORD REEL WITH 120V 20A RECEPTACLE, FURNISHED WITH 120V 20A RECEPTACLE. PROVIDE DUPLEX RECEPTACLE AT CORD PROVIDE DUPLEX RECEPTACLE AT CORD REEL BASE. FIELD COORDINATE EXACT LOCATION, CABLE LENGTH AND ADDITIONAL REQUIREMENTS WITH ARCHITECT/OWNER PRIOR TO ROUGH-IN. PROVIDE WITH QUICK RELEASE PLUG. RE 4/E6.02.
4. RECEPTACLE FOR TURN OUT TIMER. COORDINATE MOUNTING HEIGHTS AND ALL REQUIREMENTS WITH OWNER PRIOR TO ROUGH IN.
5. POWER AND A/V OUTLETS FOR WALL MOUNTED TELEVISION. FIELD COORDINATE EXACT LOCATION WITH ARCHITECT/OWNER PRIOR TO ROUGH-IN. COORDINATE PURVIS SYSTEM WITH TECHNOLOGY DRAWINGS.
6. PROVIDE POWER CONNECTION TO BAY DOOR MOTOR CONTROLLER. FIELD COORDINATE EXACT LOCATION, CONTROL WIRING QUANTITIES AND ADDITIONAL REQUIREMENTS WITH DOOR INSTALLER PRIOR TO ROUGH-IN. ROUTE (1) 3/4" CONDUIT WITH CONTROL WIRE TO ASSOCIATED OPEN/CLOSE SWITCH.
7. PROVIDE OPEN/CLOSE CONTROL SWITCH FOR MOTORIZED FOLDING/ROLLING DOOR. FIELD COORDINATE EXACT LOCATION WITH ARCHITECT/OWNER PRIOR TO ROUGH-IN (FOLDING DOOR MANUFACTURER TO PROVIDE CONTROL PANEL).
8. PROVIDE OPEN/CLOSE MASTER CONTROL SWITCH. COORDINATE EXACT LOCATION WITH ARCHITECT AND DOOR INSTALLER PRIOR TO ROUGH-IN. SWITCH SHALL CONTROL ALL 4 FRONT FOLDING DOORS.
9. PROVIDE OPEN/CLOSE MASTER CONTROL SWITCH. COORDINATE EXACT LOCATION WITH ARCHITECT AND DOOR INSTALLER PRIOR TO ROUGH-IN. SWITCH SHALL CONTROL ALL 4 BACK ROLLING DOORS.
10. 120V JUNCTION BOX CONNECTION FOR IRRIGATION CONTROLLER. FIELD COORDINATE EXACT LOCATION, MOUNTING HEIGHT AND ADDITIONAL REQUIREMENTS WITH LANDSCAPE CONTRACTOR PRIOR TO ROUGH-IN.
11. PROVIDE 100A/3P/NF/N1 SAFETY DISCONNECT RATED FOR 20 HP MINIMUM FOR CASCADE COMPRESSOR. FIELD COORDINATE EXACT LOCATION AND ADDITIONAL EQUIPMENT REQUIREMENTS WITH INSTALLER PRIOR PLACEMENT.
12. PROVIDE WEATHER PROOF BACK BOX FOR WALL MOUNTED CALL BUTTON. FIELD COORDINATE EXACT LOCATION AND ADDITIONAL REQUIREMENTS WITH TECHNOLOGY PRIOR TO ROUGH-IN. EXTEND (1) 1" CONDUIT WITH PULLSTRING FROM BACK BOX TO UP ABOVE CEILING.
13. PROVIDE 120V WEATHER PROOF JUNCTION BOX FOR CARD READER. FIELD COORDINATE EXACT LOCATION WITH ARCHITECT/ OWNER.
14. FIRE ALARM REMOTE ANNUNCIATOR. COORDINATE EXACT LOCATION WITH OWNER BEFORE ROUGH-IN.
15. GENERATOR REMOTE ANNUNCIATOR. COORDINATE EXACT LOCATION WITH OWNER BEFORE ROUGH-IN.
16. PROVIDE EMERGENCY PUSH BUTTON, BUTTON SHALL DISCONNECT ALL ELECTRICAL CIRCUITS SERVING ABOVE COUNTER RECEPTACLES, RANGE, MICROWAVE AND SHUT GAS DOWN SERVING RANGE. FIELD COORDINATE EXACT LOCATION WITH ARCHITECT/OWNER PRIOR TO ROUGH-IN.
17. 120V JUNCTION BOX CONNECTION FOR RANGE HOOD LIGHTS. FIELD COORDINATE EXACT LOCATION AND ADDITIONAL REQUIREMENTS WITH ARCHITECT/OWNER PRIOR TO ROUGH-IN. PROVIDE ADA COMPLIANT SWITCHES FOR HOOD AND HOOD LIGHT.
18. PROVIDE POWER FOR FIRE SUPPRESSION SYSTEM. SYSTEM IS TO BE TIED INTO FIRE ALARM CONTROL PANEL.
19. PROVIDE JUNCTION BOX FOR ALERTING SYSTEM DEVICE PROVIDED BY OTHERS. PROVIDE CONDUIT TO ABOVE ACCESSIBLE CEILING AREA. COORDINATE WITH ARCHITECT AND OWNER PRIOR TO ROUGH-IN.
20. VERIFY EXACT NEMA CONFIGURATION WITH EQUIPMENT MANUFACTURER PRIOR TO INSTALLATION.
21. EXTEND CIRCUIT TO INTEGRAL FAN -MOUNTED MOTOR RATED TOGGLE SWITCH. FAN TO BE INTERLOCKED WITH DEDICATED SWITCH/THERMOSTAT IN ASSOCIATED ROOM. COORDINATE WITH DIVISION 23.
22. PROVIDE CONNECTION TO INFRARED HEATER DISCONNECT SWITCH, PROVIDED BY DIVISION 23. COORDINATE EXACT LOCATION OF DISCONNECT SWITCH WITH MECHANICAL.
23. EXTEND APPLIANCE CIRCUIT THROUGH GFI CIRCUIT BREAKER.
24. GENERATOR DOCKING STATION. REFER TO ELECTRICAL ONE-LINE DIAGRAM FOR ADDITIONAL INFORMATION.
25. PROVIDE UNI-STRUT RACK FOR MOUNTING ELECTRICAL EQUIPMENT. RACK WIDTH AND DISTANCE BETWEEN CROSS MEMBER AS REQUIRED TO FIT EQUIPMENT.
26. COMBINATINO MOTOR STARTER/DISCONNECT SWITCH PROVIDED BY DIVISION 23, INSTALLED BY DIVISION 26.
27. FOLDING DOOR MANUFACTURER TO PROVIDE CONTROL PANEL. REFER TO MANUFACTURER SPECIFICATIONS FOR ALL NECESSARY RELAYS AND COMPONENTS FOR A COMPLETE WORKING SYSTEM.
28. MINI-SPLIT INDOOR EVAPORATOR UNIT SHALL RECEIVE POWER FROM ASSOCIATED OUTDOOR CONDENSING UNIT WITH FIELD SUPPLIED WIRING.

1 LEVEL 1 POWER PLAN

E201 — 1/8" = 1'-0"

ELECTRICAL GENERAL NOTES

A. ELECTRICAL CONTRACTOR SHALL GROUP HOMERUNS WITH THREE HOTS (A,B, AND C PHASE), AND #10 NEUTRAL TO PROVIDE MULTI-WIRE BRANCH CIRCUITS. NO MORE THAN 1 MULTI-WIRE HOMERUNS PER CONDUIT. CONTRACTOR SHALL PROVIDE HANDLE TIES MANUFACTURED BY THE SWITCH GEAR SUPPLIER ON ALL MULTI-WIRE CIRCUITS TO MEET THE REQUIREMENTS OF ARTICLE 210.4(B) OF THE 2017 NEC. AT THE CONTRACTOR'S OPTION, TWO AND THREE POLE BREAKERS MAY BE USED.

B. CONTRACTOR SHALL VERIFY DEVICE LOCATIONS WITH ARCHITECT PRIOR TO ROUGH-IN. REFER TO ARCHITECTURAL CASEWORK AND MILLWORK ELEVATIONS.

C. ELECTRICAL CONTRACTOR SHALL PROVIDE CONDUIT, OUTLET BOXES, JUNCTION BOXES FOR ALL TECHNOLOGY DEVICE OUTLETS. REFER TO DIVISION 26 SPECIFICATIONS AND TECHNOLOGY DRAWINGS FOR ALL WORK REQUIRED.

D. HVAC AND PLUMBING EQUIPMENT MAY DIFFER FROM LOCATIONS AS SHOWN ON ELECTRICAL DRAWINGS. COORDINATE EXACT LOCATIONS WITH MECHANICAL AND PLUMBING CONTRACTOR.

ELECTRICAL GENERAL NOTES (CONTINUED)

E. ENGRAVE ALL COVER PLATES WITH PANEL NAME AND CIRCUIT NUMBER. PROVIDE SEPARATE PRICE FOR THIS WORK. CONTRACTOR SHALL ARRANGE PANEL BOARDS TO PROVIDE CLEARANCE PER NEC 110.26.

F. ALL SINGLE-PHASE RECEPTACLES RATED 150 VOLTS TO GROUND, OR LESS, 50 AMPERES OR LESS AND THREE-PHASE RECEPTACLES RATED 150 VOLTS TO GROUND OR LESS, 100A OR LESS, IN FOOD SERVICE AREAS, BATHROOMS, ROOFTOPS, OUTDOORS, INDOOR WET LOCATIONS, LOCKER ROOMS, OR CRAWL SPACES SHALL BE GFCI, IN ACCORDANCE WITH NEC 210.8(B).

G. ELECTRICAL CONTRACTOR TO COORDINATE WITH PURVIS INSTALLER FOR ALL REQUIREMENTS PRIOR TO ROUGH-IN.

H. ELECTRICAL CONTRACTOR SHALL PROVIDE CONTACTOR FOR SHUTOFF TO ELECTRIC/GAS OVEN. MUST BE TIED INTO PURVIS SYSTEM. MANUAL RESET FOR GAS AND ELECTRICAL SHUTOFFS BY ELECTRICAL CONTRACTOR.

I. GARAGE BAY EXHAUST FANS SHALL BE PROVIDED WITH A COMBINATION MOTOR STARTER/DISCONNECT SWITCH BY DIVISION 23, INSTALLED BY DIVISION 26.

TRUE NORTH / PROJECT NORTH

DBR
9601 McAllister Freeway, Suite 410
San Antonio, Texas 78216
210.546.0200 v 210.546.0201 f
TBPE Firm Registration No. 2234

DBR Project Number 196024.000

JC | BV | CL | WJ | MC

PROFESSIONAL SEAL

NOT FOR CONSTRUCTION OR PERMITTING; PRINTED FOR REVIEW ONLY
01/14/2020
M. JACQUELINE CHANG, P.E.
TEXAS #124087

martinez ARCHITECTS
Martinez Architect, LP
900 Rockmead, Suite 250
Houston, Texas 77339
281.346.7371

DESIGN TEAM

Architectural
Martinez Architects

Civil Engineer
Maverick Engineering

Structural
Matrix Structural engineers

MEP/FP/T
DBR

Landscape Architect
KDC Associates

Consultant 5 Discipline Type
Consultant 5 Name

FIRE STATION #11

CITY OF MIDLAND
6600 BRIARWOOD AVE
MIDLAND, TX 79707

PROJECT No: MA 18017
DATE: 01/14/2020

ISSUE	Date	Description
100% DESIGN DEVELOPMENT	22-MAY-2019	
75% CONSTRUCTION DOCUMENT	26-JUN-2019	
100% ISSUE FOR PERMIT	30-JUL-2019	
100% ISSUE FOR APPROVAL TO BID	16-JAN-2020	

LEVEL 1 POWER PLAN

E201

4.1454

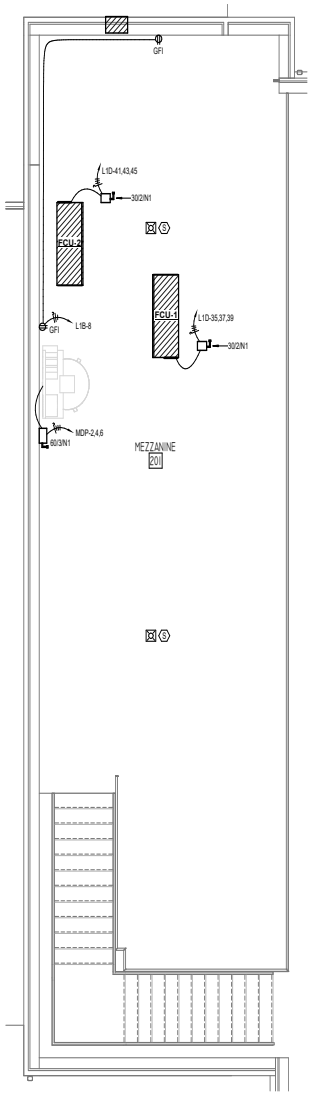

1 E301 **MEZZANINE POWER PLAN**
1/4" = 1'-0"

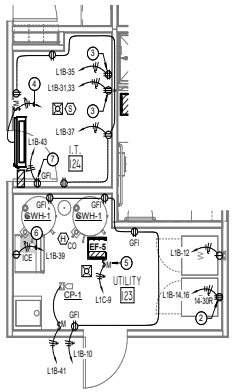

2 E301 **ENLARGED POWER PLAN - UTILITY 123**
1/4" = 1'-0"

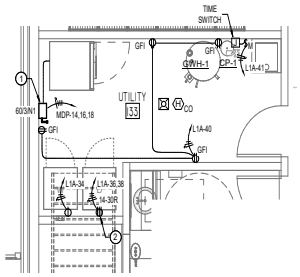

3 E301 **ENLARGED POWER PLAN - UTILITY 133**
1/4" = 1'-0"

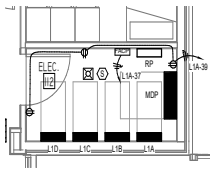

4 E301 **ENLARGED POWER PLAN - ELECTRICAL**
1/4" = 1'-0"

ELECTRICAL GENERAL NOTES

A. ELECTRICAL CONTRACTOR SHALL GROUP HOMERUNS WITH THREE HOTS (A,B, AND C PHASE), AND #10 NEUTRAL TO PROVIDE MULTI-WIRE BRANCH CIRCUITS. NO MORE THAN 1 MULTI-WIRE HOMERUNS PER CONDUIT. CONTRACTOR SHALL PROVIDE HANDLE TIES MANUFACTURED BY THE SWITCH GEAR SUPPLIER ON ALL MULTI-WIRE CIRCUITS TO MEET THE REQUIREMENTS OF ARTICLE 210.4(B) OF THE 2017 NEC. AT THE CONTRACTOR'S OPTION, TWO AND THREE POLE BREAKERS MAY BE USED.

B. CONTRACTOR SHALL VERIFY DEVICE LOCATIONS WITH ARCHITECT PRIOR TO ROUGH-IN. REFER TO ARCHITECTURAL CASEWORK AND MILLWORK ELEVATIONS.

C. ELECTRICAL CONTRACTOR SHALL PROVIDE CONDUIT, OUTLET BOXES, JUNCTION BOXES FOR ALL TECHNOLOGY DEVICE OUTLETS. REFER TO DIVISION 26 SPECIFICATIONS AND TECHNOLOGY DRAWINGS FOR ALL WORK REQUIRED.

D. HVAC AND PLUMBING EQUIPMENT MAY DIFFER FROM LOCATIONS AS SHOWN ON ELECTRICAL DRAWINGS. COORDINATE EXACT LOCATIONS WITH MECHANICAL AND PLUMBING CONTRACTOR.

E. ENGRAVE ALL COVER PLATES WITH PANEL NAME AND CIRCUIT NUMBER. PROVIDE SEPARATE PRICE FOR THIS WORK. CONTRACTOR SHALL ARRANGE PANEL BOARDS TO PROVIDE CLEARANCE PER NEC 110.26.

F. ALL SINGLE-PHASE RECEPTACLES RATED 150 VOLTS TO GROUND, OR LESS, 50 AMPERES OR LESS AND THREE-PHASE RECEPTACLES RATED 150 VOLTS TO GROUND OR LESS, 100A OR LESS, IN FOOD SERVICE AREAS, BATHROOMS, ROOFTOPS, OUTDOORS, INDOOR WET LOCATIONS, LOCKER ROOMS, OR CRAWL SPACES SHALL BE GFCI, IN ACCORDANCE WITH NEC 210.8(B).

G. ELECTRICAL CONTRACTOR TO COORDINATE WITH PURVIS INSTALLER FOR ALL REQUIREMENTS PRIOR TO ROUGH-IN.

H. ELECTRICAL CONTRACTOR SHALL PROVIDE CONTACTOR FOR SHUTOFF TO ELECTRIC OVEN. MUST BE TIED INTO PURVIS SYSTEM. MANUAL RESET FOR GAS AND ELECTRICAL SHUTOFFS BY ELECTRICAL CONTRACTOR.

I. ALL EXTERIOR EQUIPMENT SPECIFICALLY THE GENERATOR AND MECHANICAL EQUIPMENT MUST MEET THE TEXAS DEPARTMENT OF INSURANCE WIND LOAD REQUIREMENTS.

J. GARAGE EXHAUST FANS SHALL BE PROVIDED WITH A COMBINATION MOTOR STARTER/DISCONNECT SWITCH BY DIVISION 23, INSTALLED BY DIVISION 26.

ELECTRICAL KEYED NOTES

1. 60A/3P/NF/N1 SAFETY DISCONNECT FOR EXTRACTOR WASHER, FIELD COORDINATE EXACT LOCATION AND ADDITIONAL REQUIREMENTS WITH EQUIPMENT INSTALLER PRIOR TO ROUGH-IN. SAFETY DISCONNECT SHALL BE RATED FOR 5 H.P. MINIMUM.
2. VERIFY EXACT NEMA CONFIGURATION WITH EQUIPMENT MANUFACTURER PRIOR TO INSTALLATION.
3. PROVIDE (1) 30A @208V SPECIAL RECEPTACLE AND (1) QUAD 5-20R RECEPTACLES INSIDE IT ROOM. FIELD COORDINATE EXACT LOCATION AND NEMA CONFIGURATION OF SPECIAL RECEPTACLE WITH TECHNOLOGY CONTRACTOR PRIOR TO ROUGH-IN.
4. MINI-SPLIT INDOOR EVAPORATOR UNIT SHALL RECEIVE POWER FROM ASSOCIATED OUTDOOR CONDENSING UNIT WITH FIELD SUPPLIED WIRING.
5. EXTEND CIRCUIT TO INTEGRAL FAN -MOUNTED MOTOR RATED TOGGLE SWITCH. FAN TO BE INTERLOCKED WITH DEDICATED SWITCH/THERMOSTAT IN ASSOCIATED ROOM. COORDINATE WITH DIVISION 23.
6. EXTEND APPLIANCE CIRCUIT THROUGH GFI CIRCUIT BREAKER.
7. PROVIDE POWER FOR CONDENSATE PUMP. COORDINATE EXACT HEIGHT WITH DIVISION 23 PRIOR TO ROUGH-IN.

DBR
9601 McAllister Freeway, Suite 410
San Antonio, Texas 78216
210.546.0200 v 210.546.0201 f
TBPE Firm Registration No. 2234

DBR Project Number 196024.000

JC	BV	CL	WJ	MC

PROFESSIONAL SEAL

NOT FOR CONSTRUCTION OR PERMITTING; PRINTED FOR REVIEW ONLY
01/14/2020
M. JACQUELINE CHANG, P.E.
TEXAS #124887

martinez ARCHITECTS
Martinez Architect, LP
900 Rockmead, Suite 250
Houston, Texas 77339
281.346.7371

DESIGN TEAM

Architectural
Martinez Architects

Civil Engineer
Maverick Engineering

Structural
Matrix Structural engineers

MIE/P/T
DBR

Landscape Architect
KDC Associates

Consultant 5 Discipline Type
Consultant 5 Name

FIRE STATION #11

CITY OF MIDLAND
6600 BRIARWOOD AVE
MIDLAND, TX 79707

PROJECT No: **MA 18017**
DATE: **01/14/2020**

ISSUE	Date	Description
100% DESIGN DEVELOPMENT	22-MAY-2019	
75% CONSTRUCTION DOCUMENT	26-JUN-2019	
100% ISSUE FOR PERMIT	30-JUL-2019	
100% ISSUE FOR APPROVAL TO BID	16-JAN-2020	

MEZZANINE & ENLARGED POWER PLANS

E301

4.1455

SPD SCHEDULE

MARK	MANUFACTURER	MODEL	VOLTAGE	PER MODE/PHASE	PHASE	BREAKER SIZE	ACCUGUIDE CABLE SIZE
SPD1	ASCO (LIEBERT)	560120YP16ACCG10	208/120	80/160KA	3	60A/3P	5 #10, 1-1/2" C.

ELECTRICAL SERVICE SCOPE:

THE CONTRACTOR SHALL BE RESPONSIBLE FOR DELIVERY OF SERVICE TO THE NEW BLDG. COORDINATE ALL REQUIREMENTS AND COSTS AND LABOR W/ LOCAL UTILITY PRIOR TO BID. ALL COSTS ASSOCIATED W/ THE DELIVERY OF ELECTRICAL SERVICE SHALL BE INCLUDED AS A PART OF THIS CONTRACT. REFER TO SPECIFICATIONS FOR ADDITIONAL REQUIREMENTS.

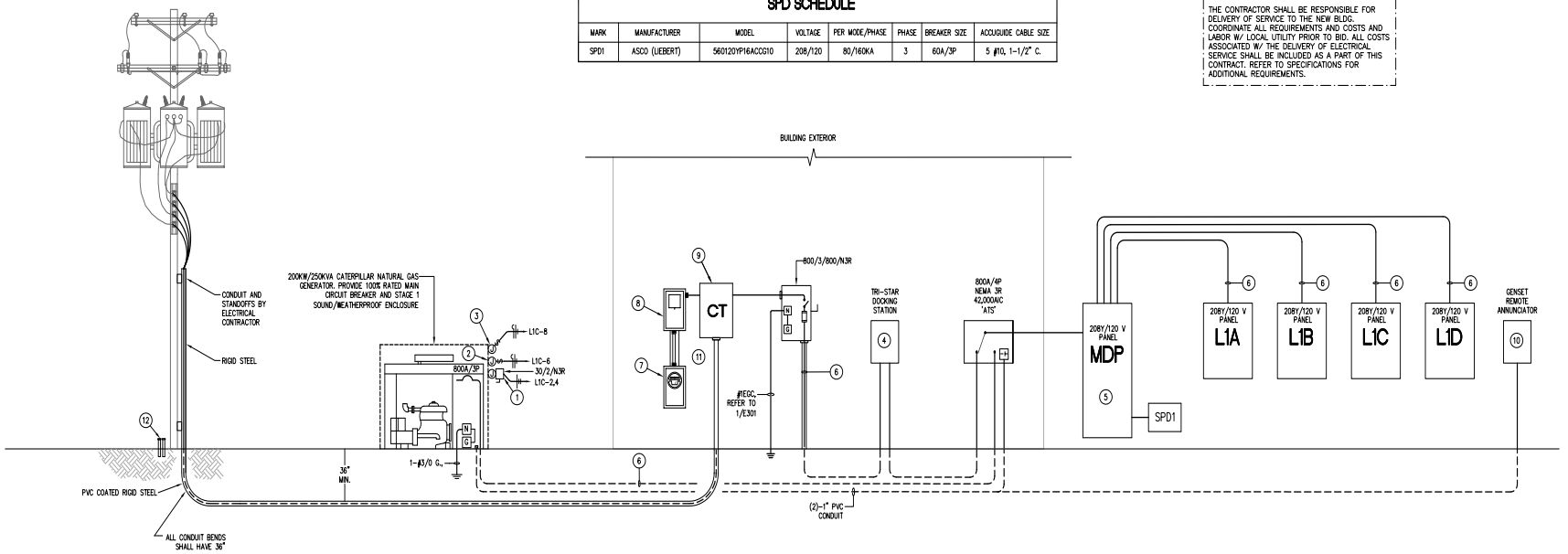

1 E401 ELECTRICAL ONE-LINE DIAGRAM

NOT TO SCALE

LOAD ANALYSIS - MIDLAND FIRE STATION #11

208 / 120, 3 -PHASE 4 -WIRE — Date: 1/14/2020

DESCRIPTION	12,025 S.F.		NEC	KVA
LIGHTING:				
INTERIOR =	12,025 S.F.	3 VA/S.F. X 125%	210.20(a)	45.1
EXTERIOR =	500 VA X 125%			0.6
POWER:				
RECEPTACLES =	11,099 S.F.	1 VA/S.F.	220.44	11.1
MISCELLANEOUS =	12,025 VA	1 VA/S.F.		12.0
ELEVATOR =	22,373 VA			22.4
HVAC:				
FANS =	12,384 VA			24.8
COOLING =	28,397 VA		220.60	0.0
HEATING=	38,300 VA		220.60	38.3
	Load	Quantity		
Cascade Equipment	31,000 VA X	1.0		31.0
Compressor	12,000 VA X	1.0		12.0
Overhead Door	1,200 VA X	3.0		3.6
Range	8,000 VA X	1.0		8.0
Hood	800 VA X	1.0		0.8
Washer	1,200 VA X	1.0		1.2
Dryer	4,000 VA X	1.0		4.0
Extractor/Washer	8,000 VA X	1.0		8.0
25% LARGEST MOTOR =	5,593 VA		430.24	5.6
PLUMBING:				
WATER HEATER =	12,000 VA			12.0
			TOTAL =	240.5
			TOTAL AMPS:	667.5
SQUARE FOOTAGE = 12,025			SERVICE SIZE:	800.0
			SPARE AMPACITY	132.5

SERVICE LATERAL AND FEEDER SCHEDULE (COPPER ONLY)

AMPERAGE	SETS	CONDUCTOR SIZE	CONDUIT (INCHES)
30A	1	4#10, 1#10 G.	3/4"C
40A	1	4#8, 1#10 G.	1"C
50A	1	4#8, 1#10 G.	1"C
60A	1	4#6, 1#10 G.	1"C
70A	1	4#4, 1#8 G.	1 1/4"C
80A	1	4#4, 1#8 G.	1 1/4"C
90A	1	4#3, 1#8 G.	1 1/4"C
100A	1	4#3, 1#8 G.	1 1/4"C
125A	1	4#1, 1#6 G.	1 1/2"C
150A	1	4#1/0, 1#6 G.	1 1/2"C
175A	1	4#2/0, 1#6 G.	2"C
200A	1	4#3/0, 1#6 G.	2"C
225A	1	4#4/0, 1#4 G.	2 1/2"C
250A	1	4#250KCMIL, 1#4 G.	2 1/2"C
300A	1	4#350KCMIL, 1#4 G.	3"C
350A	1	4#500KCMIL, 1#3 G.	3 1/2"C
400A	1	4#600KCMIL, 1#3 G.	4"C
450A	2	4#4/0, 1#2 G.	2 1/2"C
500A	2	4#250KCMIL, 1#2G.	2 1/2"C
600A	2	4#350KCMIL, 1#1G.	3"C
800A	2	4#600KCMIL, 1#1/0G.	4"C

1. ELECTRICAL CONTRACTOR SHALL PROVIDE THE NUMBER OF LUGS AND PROPER LUG SIZES TO ACCEPT CONDUCTOR SIZES SHOWN.
2. DO NOT PROVIDE GROUNDING CONDUCTOR IN SERVICE LATERAL FROM POWER COMPANY TRANSFORMER.
3. CONTRACTOR SHALL INCREASE FEEDERS IN SIZE TO COMPENSATE FOR VOLTAGE DROP. FEEDERS SHALL BE SIZED TO MAINTAIN A 2% OR LESS VOLTAGE DROP ON FEEDERS AND A 3% OR LESS VOLTAGE DROP ON BRANCH CIRCUITS.

ONE-LINE DIAGRAM GENERAL NOTES:

A. MANUFACTURER OF ELECTRICAL GEAR SHALL PROVIDE A COORDINATION STUDY FOR THE ENTIRE ELECTRICAL SYSTEM IN ORDER TO SET BREAKERS. REFER TO SPECIFICATIONS. MANUFACTURER SHALL ALSO PROVIDE A FAULT CURRENT/ARC FAULT STUDY FOR THE ENTIRE ELECTRICAL SYSTEM IN ORDER TO SELECT INTERRUPTING RATINGS OF ALL CIRCUIT BREAKERS, DISTRIBUTION PANELBOARDS, PANELBOARDS, ETC. A FULLY RATED SYSTEM SHALL BE USED.

B. CONTRACTOR SHALL PROVIDE AN ENGRAVED NAMEPLATE ON ALL NEW ELECTRICAL EQUIPMENT INDICATION EQUIPMENT VOLTAGE,AMPERAGE AND AVAILABLE SHORT CIRCUIT RATING PER 2018 NEC.

C. METERING EQUIPMENT ENCLOSURE PROVIDED BY ENCOR, INSTALLED BY ELECTRICAL CONTRACTOR PER ENCOR'S SPECIFICATIONS. METER INSTALLED BY ENCOR.

D. ALL CONDUCTORS SHALL BE COPPER.

E. CONTRACTOR SHALL INSTALL FEEDERS BASED ON THE OVERCURRENT DEVICE RATING UNLESS OTHERWISE NOTED. CONTRACTOR SHALL REFER TO THE FEEDER SCHEDULE TO OBTAIN AND INSTALL THE FEEDERS REQUIRED.

F. PRIOR TO INSTALLATION OF UNDERGROUND FEEDERS, THE ELECTRICAL CONTRACTOR SHALL SUBMIT AN UNDERGROUND ROUTING PLAN TO THE ENGINEER OF RECORD., INDICATING THE EXACT ROUTING PATH FOR ALL UNDERGROUND CONDUIT. INDICATE STUB-UP LOCATIONS, SIZE AND QUANTITY OF CONDUIT. ALL ELECTRICAL PANELS AND EQUIPMENT SHALL BE SHOWN ON THIS PLAN FOR REFERENCE OF CONDUIT TERMINATION.

ELECTRICAL KEYED NOTES:

1. 208V JUNCTION BOX CONNECTION TO GENERATOR'S JACKET HEATER. FIELD COORDINATE EXACT LOCATION AND ADDITIONAL MANUFACTURER'S REQUIREMENTS WITH GENERATOR INSTALLER PRIOR TO ROUGH-IN.
2. 120V JUNCTION BOX CONNECTION FOR GENERATOR'S ANTI-CONDENSATION HEATER, FIELD COORDINATE EXACT LOCATION AND ADDITIONAL MANUFACTURER'S REQUIREMENTS WITH GENERATOR INSTALLER PRIOR TO ROUGH-IN.
3. 120V JUNCTION BOX CONNECTION FOR BATTERY CHARGER. FIELD COORDINATE EXACT LOCATION AND ADDITIONAL MANUFACTURER'S REQUIREMENTS WITH GENERATOR INSTALLER PRIOR TO ROUGH-IN.
4. PROVIDE 800A TRYSTAR DOCKING STATION FOR TEMPORARY GENERATOR/LOAD BANK.
5. REFER TO SCHEDULE ON SHEET E502 FOR CIRCUIT BREAKER SIZES.
6. REFER TO FEEDER SCHEDULES ON THIS SHEET FOR WIRE AND CONDUIT SIZE AND QUANTITIES.
7. METER BOX FOR CT RATED METER PROVIDED BY ENCOR, INSTALLED BY ELECTRICAL CONTRACTOR PER ENCOR'S SERVICE STANDARDS.
8. METERING CURRENT TRANSFORMERS BOX PROVIDED BY ENCOR, INSTALLED BY ELECTRICAL CONTRACTOR PER ENCOR'S SERVICE STANDARDS.
9. METERING POTENTIAL TRANSFORMER BOX PROVIDED BY ENCOR, INSTALLED BY ELECTRICAL CONTRACTOR PER ENCOR'S SERVICE STANDARDS.
10. COORDINATE EXACT LOCATION OF GENERATOR ANNUNCIATOR PANEL WITH ARCHITECT/OWNER.
11. COORDINATE WITH ENCOR FOR ALL UTILITY STANDARDS.
12. PROVIDE (2) 2" RIGID CONDUITS ON RISER POLE FOR TELECOMMUNICATION CABLING AND CABLE SERVICE. COORDINATE ADDITIONAL REQUIREMENTS WITH OWNER SELECTED PROVIDER. REFER TO MEP SITE PLAN FOR APPROXIMATE ROUTING.

DBR
9601 McAllister Freeway, Suite 410
San Antonio, Texas 78216
210.546.0200 v 210.546.0201 f
TBPE Firm Registration NO. 2234

DBR Project Number 196024.000

JC	BV	CL	WJ	MC

PROFESSIONAL SEAL

NOT FOR CONSTRUCTION OR PERMITTING; PRINTED FOR REVIEW ONLY
01/14/2020
M. JACQUELINE CHANG, P.E.
TEXAS #124997

martinez ARCHITECTS
Martinez Architect, LP
900 Rockmead, Suite 250
Houston, Texas 77339
281.346.7371

DESIGN TEAM

Architectural
Martinez Architects

Civil Engineer
Consultant 1 Name

Structural
Matrix Structural Engineers

MEP
DBR

Landscaping
KDC Associates

FIRE STATION #11

CITY OF MIDLAND
Briarwood Ave & Golden Gate Dr
Midland, TX 79707

PROJECT No: MA 18017
DATE: 01/14/2020

ISSUE Date Description
100% DESIGN DEVELOPMENT 22-MAY-2019
75% CONSTRUCTION DOCUMENT 26-JUN-2019
100% ISSUE FOR PERMIT 30-JUL-2019
100% ISSUE FOR APPROVAL TO BID 16-JAN-2020

ELECTRICAL ONE-LINE DIAGRAM

E401

4.1456

LIGHTING FIXTURE SCHEDULE

TAG	MANUFACTURER	MODEL	MOUNTING	LAMP	VOLTAGE	APPARENT POWER	DESCRIPTION
B1	PHILIPS - DAYBRITE	2FGG-38L-835-2-DS-UNV-DIM	RECESSED	3500K LED	UNIVERSAL	34 VA	2X2 VOLUMETRIC FIXTURE WITH 3800 LUMENS AND 3500K.
D1	LIGHTOLIER	C4RN-C4L15835MZ10U-C4RDLCC	RECESSED	3500K LED	UNIVERSAL	16 VA	4" MEDIUM BEAM LENSED DOWNLIGHT WITH 1500 LUMENS AND 3500K.
D2	LIGHTOLIER	C4RN-C4L15835MZ10U-C4RSLCC	RECESSED	3500K LED	UNIVERSAL	16 VA	SAME AS FIXTURE TYPE D1 EXCEPT WITH FLUSH DIFFUSE LENS AND PRE-INSTALLED GASKET.
D3	VERSALED LIGHTING	VP3-Q-S-10L-QT-40K	SURFACE	4000K LED	UNIVERSAL	16 VA	VAPOR PROOF JELLY JAR FIXTURE WITH 800 LUMENS AND 4000K.
F1	PHILIPS - DAYBRITE	FSS455L835-UNV-DIM	SURFACE	3500K LED	UNIVERSAL	45 VA	4' STRIP FIXTURE WITH 5500 LUMENS AND 3500K.
H1	PHILIPS - DAYBRITE	FBX36LL35-UNV-LFR	SURFACE	3500K LED	UNIVERSAL	255 VA	4' HIGH BAY FIXTURE WITH 36,000 LUMENS AND 3500K.
P1	LIGHTOLIER	C6PDL15835WZ10UCCW-CACK10WH	PENDANT	3500K LED	UNIVERSAL	15 VA	6" DECORATIVE PENDANT WITH 1,500 LUMENS AND 3500K.
W1	PHILIPOS - GARDCO	101L-16L-700-NW-G1-3-UNV-DD-F11-WH	WALL	4000K LED	UNIVERSAL	26 VA	EXTERIOR WALL SCONCE WITH 3,200 LUMENS AND 4000K.
W2	EDWARDS SIGNALING	105XBRMA120A-105BM-105BX	WALL	AMBER LED	120V	12 VA	APPARATUS BAY DOOR FLASHERS.
X1	SIGNIFY	CLXARW	UNIVERSAL	LED	UNIVERSAL	1 VA	UNIVERSAL EXIT SIGN WITH CHEVRONS AS INDICATED ON PLANS.

LIGHTING FIXTURE SCHEDULE GENERAL NOTES

A. IT SHALL BE THE RESPONSIBILITY OF THE CONTRACTOR TO CONFIRM THE COMPATIBILITY BETWEEN THE CEILING TYPE, AS DEFINED ON THE ARCHITECTURAL ROOM FINISH SCHEDULE, AND THE LIGHTING FIXTURE TRIM AS DEFINED ON THE LIGHTING FIXTURE SCHEDULE. NO CHANGES OR DEVIATIONS SHALL BE MADE FROM THE CONTRACT DOCUMENTS, HOWEVER, WITHOUT THE WRITTEN APPROVAL OF THE ENGINEER/ARCHITECT.

B. EQUIVALENT PRODUCTS BY THE FOLLOWING MANUFACTURER'S MAY BE ACCEPTABLE AS ALTERNATE SUBSTITUTIONS (ALTERNATE PRODUCTS SHALL HAVE SUFFICIENT DATA FOR REVIEW AND APPROVAL, INCLUDING POINT-BY-POINT ELECTRONIC CALCULATIONS): ACUITY, PHILIPS-DAYBRITE, PHILIPS-LIGHTOLIER, PHILIPS-GARDCO, LSI AND WILLIAMS.

C. ALL LIGHTING FIXTURE COLOR FINISHES/PATTERNS MUST BE SELECTED BY THE ARCHITECT FROM THE MANUFACTURER'S FULL RANGE. THE GENERAL CONTRACTOR IS TO CONFIRM ALL COLORS WITH THE ARCHITECT PRIOR TO ORDERING. ALL FIXTURE COLORS NOT CONFIRMED, SHALL BE CORRECTED AT THE GC'S COST.

D. CONFIRM ALL FIXTURE MOUNTING HEIGHTS WITH THE ARCHITECTURAL DETAILS AND ELEVATIONS PRIOR TO ROUGH-IN.

LIGHTING CONTROL DEVICE SCHEDULE

TAG	DESCRIPTION	MANUFACTURER	MODEL NUMBER	VOLTAGE	CONTROL FUNCTION
D	DIMMER WALL SWITCH	DOUGLAS LIGHTING	WRD-8701	LOW VOLTAGE	1-BUTTON ON/OFF WITH DIMMER
DS	CEILING/STRUCTURE MOUNTED PHOTO SENSOR	DOUGLAS LIGHTING	WOSSDD2-DPR-VW	LOW VOLTAGE	PHOTO SENSOR TO AUTOMATICALLY DIM LIGHT FIXTURES WITHIN DAY LIGHT ZONE ACCORDING TO AMOUNT OF DAYLIGHT PRESENT
LV1	DIGITAL WALL SWITCH (1-BUTTON WITH DIMMER)	DOUGLAS LIGHTING	WSD-3501	LOW VOLTAGE	1-BUTTON ON/OFF WITH DIMMER, ZONES INDICATED ON DRAWING
OC	OCCUPANCY SENSOR WALL SWITCH	DOUGLAS LIGHTING	WOSSIU1-N-VW	LOW VOLTAGE	1-BUTTON ON/OFF WALL SWITCH SENSOR WITH AUTOMATIC ON TO 100%
OC1	CEILING/STRUCTURE MOUNTED OCCUPANCY SENSOR	DOUGLAS LIGHTING	WORSDU1-P-N	LOW VOLTAGE	AUTOMATICALLY TURN ON LIGHTS TO 100%, TURNS OFF LIGHTS AFTER 20 MINUTES OF INACTIVITY
OC2	CEILING/STRUCTURE MOUNTED OCCUPANCY SENSOR	DOUGLAS LIGHTING	WORSDD2-DPR-L	LOW VOLTAGE	AUTOMATICALLY TURN ON LIGHTS TO NOT MORE THAN 50%, TURNS OFF LIGHTS AFTER 20 MINUTES OF INACTIVITY
OC3	CEILING/STRUCTURE MOUNTED OCCUPANCY SENSOR (HIGH BAY)	DOUGLAS LIGHTING	WORBID2-DPR-L	LOW VOLTAGE	AUTOMATICALLY TURN ON LIGHTS TO 100%, TURNS OFF LIGHTS AFTER 20 MINUTES OF INACTIVITY
RC	ROOM CONTROLLER	DOUGLAS LIGHTING	WRC-3160	LINE VOLTAGE	ZONE INDICATED ON/OFF, ZONE INDICATED DIM UP/DOWN
T	SPRING WOUND TIMER	DOUGLAS LIGHTING		LINE VOLTAGE	LINE VOLTAGE TIMER SWITCH
VC	OCCUPANCY SENSOR WALL SWITCH	DOUGLAS LIGHTING	WOSSIU1-N-VW	LOW VOLTAGE	1-BUTTON ON/OFF WALL SWITCH SENSOR WITH AUTOMATIC OFF AFTER 20 MINUTES OF INACTIVITY

LIGHTING CONTROL DEVICE SCHEDULE GENERAL NOTES

A. REFER TO LIGHTING PLANS FOR ZONE CONTROL INFORMATION AND DEVICE LOCATIONS.

B. ALL DEVICE LOCATIONS SHALL BE COORDINATED WITH OWNER/ARCHITECT PRIOR TO ROUGH-IN.

C. PROVDIE ALL NECESSARY COMPONENTS FOR A FULLY FUNCTIONAL SYSTEM.

LIGHTING CONTROLS/COMMISSIONING PLAN

THE CONTRACTOR SHALL INCLUDE, AS PART OF THEIR SCOPE, THE REQUIREMENTS TO COMMISSION THE LIGHTING CONTROL SYSTEM, AS REQUIRED BELOW. THE LIGHTING CONTROL SYSTEM MAY BE STAND-ALONE, NETWORK, RELAY, CONTACTOR OPERATED, TIMER, PHOTOCELL, OR ANY COMBINATION OF THESE LISTED. FOR EACH OF THE FOLLOWING TASKS, RECORD THE DATE PERFORMED, PERSON(S) COMPLETING THE VERIFICATION, INTIAL SETTING/CONDITION, ACTIONS PERFORMED, AND FINAL SETTING CONDITION. SUBMIT DOCUMENTATION TO THE CITY HAVING JURISDICATION AT OR BEFORE SUBSTANTION COMPLETION. SUBMITTING AFTER SUBSTANTION COMPLETION WILL DELAY THE ISSUANCE OF A CERTIFICATE OF OCCUPANCY.

A. ENSURE ALL LIGHTING FIXTURES HAVE LAMPS THAT ARE FUNCTIONAL.

B. TEST ALL EXIT SIGNS, EMERGENCY LIGHTING FIXTURES, AND EMERGENCY TRANSFER DEVICES OR BATTERY BACKUPS THAT ARE INTEGRAL OR REMOTE.

C. VERIFY THAT ALL OCCUPANCY SENSORS HAVE BEEN INSTALLED AND ARE OPERATIONS.

D. TEST ALL WALL-SWITCH OCCUPANCY SENSORS.

E. TEST ALL DIGITAL/LOW VOLTAGE SWITCHES AND THEIR PERIPHERALS, WHERE INSTALLED, SUCH AS:
   a. OCCUPANCY SENSORS
   b. POWER PACKS
   c. DAYLIGHT SENSORS

F. VERIFY THE FOLLOWING FUNATIONALITY AND/OR INSTALLATION OF ALL CONTROL DEVICES:
   a. SENSORS HAVE BEEN LOCATED AND AIMED TO RELEVANT LOCATIONS OF OCCUPANCY, PER MANUFACTURERS RECOMMENDATION.
   b. VERIFY STATUS INDICATORS ON DEVICES ARE OPERATIONAL AND CORRECT.
   c. DEVICES CONTROL LIGHTING FIXTURES AS SPECIFIED ON THE DRAWINGS.
   d. ALL OCCUPANCY/VACANCY MODE TIME-OUTS ARE SET TO NO GREATER THAN 30 MINUTES.
   e. ALL CONTROL DEVICES ARE SET VACANCY MODE, OR NO MORE THAN 50% OF FIXTURES TURN ON AUTOMATICALLY UPON ENTERING A SPACE/ROOM.
   f. MOVEMENT IN ADJACENT SPACES OR CYCLING OF HVAC SYSTEMS DOES NOT FALSELY TRIGGER SENSORS (VACANCY MODE PREFERRED TO PREVENT THIS).

G. SHOULD ADDITIONAL INFORMATION REGARDING THE TESTING REQUIREMENTS BE NEEDED, REFERENCE IECC 2015 SECTION 408.3.

DBR
9601 McAllister Freeway, Suite 410
San Antonio, Texas 78216
210.546.0200 v 210.546.0201 f
TBPE Firm Registration No. 2234

DBR Project Number 196024.000

JC | BV | CL | WJ | MC

PROFESSIONAL SEAL

NOT FOR CONSTRUCTION OR PERMITTING; PRINTED FOR REVIEW ONLY
01/14/2020
M. JACQUELINE CHANG, P.E.
TEXAS #124087

martinez ARCHITECTS
Martinez Architect, LP
900 Rockmead, Suite 250
Houston, Texas 77339
281.346.7371

DESIGN TEAM

Architectural
Martinez Architects

Civil Engineer
Maverick Engineering

Structural
Matrix Structural engineers

M/E/P/T
DBR

Landscape Architect
KDC Associates

Consultant 5 Discipline Type
Consultant 5 Name

FIRE STATION #11
CITY OF MIDLAND
6600 BRIARWOOD AVE
MIDLAND, TX 79707

PROJECT No: **MA 18017**
DATE: **01/14/2020**

ISSUE	Date	Description
100% DESIGN DEVELOPMENT	22-MAY-2019	
75% CONSTRUCTION DOCUMENT	26-JUN-2019	
100% ISSUE FOR PERMIT	30-JUL-2019	
100% ISSUE FOR APPROVAL TO BID	16-JAN-2020	

ELECTRICAL SCHEDULES

E501

Panelboard MDP

42000 AIC Rating
X New
Existing

120/208 Wye Volt, 3 Phase, 4 Wire
1 Section
Type 1 -Nema Rating

Mains Type: MLO

0 A MCB
600 A BUS (Copper)
ISO. GRND. BUS

X Single
Double
Feed - Thru

Mounting
X Surface
Flush

Note	Load...	Type	Description	Wire	CB	CKT	CB	Wire	Description	Type	Load...	N...
						1 2						
	29989 VA	Other: L; R; EL;...	Panel L1A	4/0	225 A	3 4	50 A	8	Air Compressor: Utility 133	MT	0 VA	
						5 6						
	47830 VA	R; MT; M	Panel L1B	4/0	225 A	7 8	100 A	3	Cascade Machine: Shop 135	M	22336 VA	
						9 10						
						11 12						
	41496 VA	R; F; H; MT; M	Panel L1C	4/0	225 A	13 14	60 A	6	Extractor: Utility 133	MT	10800 VA	
						15 16						
						17 18						
	38803 VA	C; H; M	Panel L1D	4/0	225 A	19 20	35 A	8	Exhaust Fan EF-7	F	6305 VA	
						21 22						
						23 24						
	--	--	Space	--	--	25 26	--	--	Space	--	--	
	--	--	Space	--	--	27 28	--	--	Space	--	--	
	--	--	Space	--	--	29 30	--	--	Space	--	--	
	--	--	Space	--	--	31 32	--	--	Space	--	--	
	--	--	Space	--	--	33 34	--	--	Space	--	--	
	--	--	Space	--	--	35 36	--	--	Space	--	--	
	--	--	Space	--	--	37 38						
	--	--	Space	--	--	39 40	60 A	6	SPD1	SP	0 VA	
	--	--	Space	--	--	41 42						

N.E.C. (2017)	Load Type	Conn.	Fct.	Diversity	N.E.C.(2017)	Load Type	Conn.	Fct.	Diversity
220.44	(R)Receptacle	32460 VA	65.40%	21230 VA	210.20(a)	(L)Lighting	8963 VA	125.00%	11204 VA
220.56	(K)Kitchen					(EL)Ext. Ltg.	1446 VA	125.00%	1808 VA
220.60	(C)Cooling	30663 VA	100.00%	0 VA	620.14	(E)Elevators			
220.60	(H)Heating	40660 VA	100.00%	40660 VA		(WH)Wat. Htr.			
220.60	(F)Fans	9281 VA	100.00%	9281 VA	220.5	(MT)Lrg. Motor	35590 VA	107.59%	38290 VA
	(M)Misc.	67656 VA	100.00%	67656 VA		(SP)Sub Pnl.	0 VA	Not Computed	0 VA

Total Connected Load: 226719 VA VA = 629 A
Total Load (Diversified): 190128 VA VA = 528 A

Location of Panel: ELEC. 112

Panelboard L1A

22000 AIC Rating
X New
Existing

120/208 Wye Volt, 3 Phase, 4 Wire
1 Section
Type 1 -Nema Rating

Mains Type: MLO

0 A MCB
225 A BUS (Copper)
ISO. GRND. BUS

X Single
Double
Feed - Thru

Mounting
X Surface
Flush

Note	Load...	Type	Description	Wire	CB	CKT	CB	Wire	Description	Type	Load...	N...
	720 VA	R	Receptacles: Exterior Perimeter	12	20 A	1 2	20 A	12	Lighting: Flag Pole	EL	600 VA	
	540 VA	R	Receptacles: Exterior Perimeter	12	20 A	3 4	20 A	12	Monument Sign	EL	600 VA	
	720 VA	R	Receptacles: Exterior Perimeter	12	20 A	5 6	20 A	12	Lighting: Exterior Egress	EL	194 VA	
	--	--	Spare	--	20 A	7 8	20 A	12	Lighting: Exterior Perimeter	EL	52 VA	
	--	--	Spare	--	20 A	9 10	20 A	12	Lighting: Apparatus Bay Flashers	L	96 VA	
	--	--	Spare	--	20 A	11 12	20 A	12	Lighting: Apparatus Bay	L	1020 VA	
	1080 VA	R	Turnout Timer: Apparatus Bay	12	20 A	13 14	20 A	12	Lighting: Apparatus Bay	L	1020 VA	
	1080 VA	R	Turnout Timers: Apparatus Bay	12	20 A	15 16	20 A	12	Lighting: Apparatus Bay	L	1020 VA	
	540 VA	R	Receptacles: Apparatus Bay	12	20 A	17 18	20 A	12	Lighting: Apparatus Bay	L	1054 VA	
	540 VA	R	Receptacles: Apparatus Bay	12	20 A	19 20	20 A	12	Lighting: Apparatus Bay	L	1020 VA	
	360 VA	R	Receptacles: Apparatus Bay	12	20 A	21 22	20 A	12	Lighting: Entry and Hallway	L	577 VA	
	--	--	Spare	--	20 A	23 24	20 A	12	Lighting: Mezzanine	L	340 VA	
	1000 VA	M	Treadmill: Excercise 137	12	20 A	25 26	20 A	12	Lighting: Gear Room 134	L	961 VA	
	1000 VA	M	Stair Climber: Excercise 137	12	20 A	27 28	20 A	12	Lighting: Electrical 112	L	1360 VA	
	180 VA	M	TV: Excercise 137	12	20 A	29 30	20 A	12	Lighting: Kitchen/Dinning/Day Rm	L	495 VA	
	180 VA	M	TV: Excercise 137	12	20 A	31 32	20 A	--	Spare	--	--	
	720 VA	R	Receptacles: Excercise 137	12	20 A	33 34	20 A	12	Washer: Utility 133	R	1200 VA	
	--	--	Spare	--	20 A	35 36	30 A	10	Dryer: Utility 133	M	4000 VA	
1	500 VA	M	FACP: Electrical 112	12	20 A	37 38						
	540 VA	R	Receptacles: Electrical 112	12	20 A	39 40	20 A	12	Receptacles: Utility 133	Oth...	720 VA	
	540 VA	MT	Circulation Pump: Utility 133	12	20 A	41 42	20 A	12	Receptacles: Entry 101	R	720 VA	
	--	--	Space	--	--	43 44	20 A	12	Computers: Office 102	R	1080 VA	
	--	--	Space	--	--	45 46	20 A	12	Printer: Apparatus Bay	R	180 VA	
	--	--	Spare	--	20 A	47 48	20 A	12	Zetron Power: Apparatus Bay	R	180 VA	1
	--	--	Spare	--	20 A	49 50	20 A	12	Receptacles: Shop 135	R	360 VA	
	--	--	Spare	--	20 A	51 52	20 A	12	Receptacles: Shop 135	R	360 VA	
	--	--	Spare	--	20 A	53 54	20 A	12	Receptacles: Fire/Riser 140	R	540 VA	

N.E.C. (2017)	Load Type	Conn.	Fct.	Diversity	N.E.C.(2017)	Load Type	Conn.	Fct.	Diversity
220.44	(R)Receptacle	12000 VA	91.67%	11000 VA	210.20(a)	(L)Lighting	8963 VA	125.00%	11204 VA
220.56	(K)Kitchen					(EL)Ext. Ltg.	1446 VA	125.00%	1808 VA
220.60	(C)Cooling			0 VA	620.14	(E)Elevators			
220.60	(H)Heating			0 VA		(WH)Wat. Htr.			
220.60	(F)Fans				220.5	(MT)Lrg. Motor	540 VA	116.67%	630 VA
	(M)Misc.	7040 VA	100.00%	7040 VA		(SP)Sub Pnl.			

Total Connected Load: 29989 VA VA = 83 A
Total Load (Diversified): 31681 VA VA = 88 A

Location of Panel: ELEC. 112

Panelboard L1B

22000 AIC Rating
X New
Existing

120/208 Wye Volt, 3 Phase, 4 Wire
1 Section
Type 1 -Nema Rating

Mains Type: MLO

0 A MCB
225 A BUS (Copper)
ISO. GRND. BUS

X Single
Double
Feed - Thru

Mounting
X Surface
Flush

Note	Load...	Type	Description	Wire	CB	CKT	CB	Wire	Description	Type	Load...	N...
	1080 VA	R	Receptacles: Dorms 1 & 2	12	20 A	1 2	20 A	12	Folding Bay Door Controller	M	500 VA	
	1080 VA	R	Receptacles: Dorms 3 & 4	12	20 A	3 4	20 A	12	Exhaust Fan EF-7 Controller	M	500 VA	
	1080 VA	R	Receptacles: Dorms 5 & 6	12	20 A	5 6	20 A	--	Spare	--	--	
	1080 VA	R	Receptacles: Dorms 7 & 8	12	20 A	7 8	20 A	12	Receptacles: Mezzanine	R	360 VA	
	480 VA	R	Receptacles/EF's: Dorm RR's	12	20 A	9 10	20 A	12	Receptacles: Utility 123	R	720 VA	
	720 VA	R	Receptacles/EF's: Dorm RR's	12	20 A	11 12	20 A	12	Washer: Utility 123	R	1200 VA	
	180 VA	R	Appliance Circuit #1	12	20 A	13 14	30 A	10	Dryer: Utility 123	M	4000 VA	
	360 VA	R	Appliance Circuit #2	12	20 A	15 16						
	360 VA	R	Receptacles: Kitchen 108	12	20 A	17 18	50 A	8	Electric Range	M	6000 VA	2
	360 VA	R	Receptacles: Kitchen Island	12	20 A	19 20						
	500 VA	M	Range Hood	12	20 A	21 22	20 A	12	Refrigerator: Pantry 1	R	1200 VA	2
	540 VA	M	Fire Suppression System	12	20 A	23 24	20 A	12	Freezer: Pantry 1	R	1200 VA	2
	540 VA	R	Receptacles: Day Room	12	20 A	25 26	20 A	12	Refrigerator: Pantry 2	R	1200 VA	2
	360 VA	R	TV: Day Room	12	20 A	27 28	20 A	12	Freezer: Pantry 2	R	1200 VA	2
	720 VA	R	Receptacles: Hallway 128	12	20 A	29 30	20 A	12	Refrigerator: Pantry 3	R	1200 VA	2
	2000 VA	M	IT Receptacle: IT 124	10	30 A	31 32	20 A	12	Freezer: Pantry 3	R	1200 VA	2
						33 34	20 A	12	Disposal	R	1200 VA	
	360 VA	R	IT Receptacle: IT 124	12	20 A	35 36						
	720 VA	R	Receptacles: IT 124	12	20 A	37 38	20 A	--	Spare	--	--	
2	1200 VA	M	Ice Machine: Utility 123	12	20 A	39 40	20 A	12	Cord Reel: Apparatus Bay	M	1500 VA	
	250 VA	MT	Circulation Pump: Utility 123	12	20 A	41 42	20 A	12	Cord Reel: Apparatus Bay	M	1500 VA	
	180 VA	R	Condensate Pump: IT 124	12	20 A	43 44	20 A	12	Cord Reel: Apparatus Bay	M	1500 VA	
	--	--	Spare	--	20 A	45 46	20 A	12	Cord Reel: Apparatus Bay	M	1500 VA	
	--	--	Spare	--	20 A	47 48	20 A	12	Cord Reel: Apparatus Bay	M	1500 VA	
	--	--	Spare	--	20 A	49 50	20 A	12	Cord Reel: Apparatus Bay	M	1500 VA	
	--	--	Spare	--	20 A	51 52	20 A	12	Cord Reel: Apparatus Bay	M	1500 VA	
	--	--	Spare	--	20 A	53 54	20 A	12	Cord Reel: Apparatus Bay	M	1500 VA	

N.E.C. (2017)	Load Type	Conn.	Fct.	Diversity	N.E.C.(2017)	Load Type	Conn.	Fct.	Diversity
220.44	(R)Receptacle	20340 VA	74.58%	15170 VA	210.20(a)	(L)Lighting			
220.56	(K)Kitchen					(EL)Ext. Ltg.			
220.60	(C)Cooling			0 VA	620.14	(E)Elevators			
220.60	(H)Heating			0 VA		(WH)Wat. Htr.			
220.60	(F)Fans				220.5	(MT)Lrg. Motor	250 VA	125.00%	313 VA
	(M)Misc.	27240 VA	100.00%	27240 VA		(SP)Sub Pnl.			

Total Connected Load: 47830 VA VA = 133 A
Total Load (Diversified): 42723 VA VA = 119 A

Location of Panel: ELEC. 112

Panelboard L1C

22000 AIC Rating
X New
Existing

120/208 Wye Volt, 3 Phase, 4 Wire
1 Section
Type 1 -Nema Rating

Mains Type: MLO

0 A MCB
225 A BUS (Copper)
ISO. GRND. BUS

X Single
Double
Feed - Thru

Mounting
X Surface
Flush

Note	Load...	Type	Description	Wire	CB	CKT	CB	Wire	Description	Type	Load...	N...
	700 VA	M	Security Gate/Card Reader	12	20 A	1 2	30 A	10	Generator Jacket Heater	H	4000 VA	
	--	--	Spare	--	20 A	3 4						
	696 VA	F	Exhaust Fan EF-2: Electrical 112	12	15 A	5 6	20 A	12	Generator Condensation Heater	M	1000 VA	
	120 VA	F	Exhaust Fan EF-4 & EF-6: Air...	12	20 A	7 8	20 A	12	Generator Battery Charger	M	1200 VA	
	360 VA	F	Exhaust Fan EF-3: Utility 123	12	20 A	9 10	20 A	--	Spare	--	--	
	60 VA	R	Exhaust Fan EF-1; Decon 132	12	15 A	11 12	20 A	--	Spare	--	--	
	60 VA	R	Exhaust Fan EF-3: Air Lock 136	12	20 A	13 14	20 A	--	Spare	--	--	
						15 16						
	3000 VA	MT	Folding Bay Door	12	15 A	17 18	15 A	12	Rolling Bay Door	MT	3000 VA	
						19 20						
						21 22						
	3000 VA	MT	Folding Bay Door	12	15 A	23 24	15 A	12	Rolling Bay Door	MT	3000 VA	
						25 26						
						27 28						
	3000 VA	MT	Folding Bay Door	12	15 A	29 30	15 A	12	Rolling Bay Door	MT	3000 VA	
						31 32						
						33 34						
	3000 VA	MT	Folding Bay Door	12	15 A	35 36	15 A	12	Rolling Bay Door	MT	3000 VA	
						37 38						
	900 VA	F	Garage Exhaust Fan GEF-2	12	15 A	39 40	25 A	10	Electric Unit Heater: EUH-1	H	3750 VA	
						41 42						
						43 44	25 A	10	Electric Unit Heater: EUH-2	H	3750 VA	
	900 VA	F	Garage Exhaust Fan GEF-1	12	15 A	45 46						
						47 48						
						49 50						
	--	--	Spare	--	20 A	51 52						
	--	--	Spare	--	20 A	53 54	20 A	--	Spare	--	--	

N.E.C. (2017)	Load Type	Conn.	Fct.	Diversity	N.E.C.(2017)	Load Type	Conn.	Fct.	Diversity
220.44	(R)Receptacle	120 VA	100.00%	120 VA	210.20(a)	(L)Lighting			
220.56	(K)Kitchen					(EL)Ext. Ltg.			
220.60	(C)Cooling			0 VA	620.14	(E)Elevators			
220.60	(H)Heating	11500 VA	100.00%	11500 VA		(WH)Wat. Htr.			
220.60	(F)Fans	2976 VA	100.00%	2976 VA	220.5	(MT)Lrg. Motor	24000 VA	103.13%	24750 VA
	(M)Misc.	2900 VA	100.00%	2900 VA		(SP)Sub Pnl.			

Total Connected Load: 41496 VA VA = 115 A
Total Load (Diversified): 42246 VA VA = 117 A

Location of Panel: ELEC. 112

Panelboard L1D

22000 AIC Rating
X New
Existing

120/208 Wye Volt, 3 Phase, 4 Wire
1 Section
Type 1 -Nema Rating

Mains Type: MLO

0 A MCB
225 A BUS (Copper)
ISO. GRND. BUS

X Single
Double
Feed - Thru

Mounting
X Surface
Flush

Note	Load...	Type	Description	Wire	CB	CKT	CB	Wire	Description	Type	Load...	N...
	180 VA	C	VRV Branch Selector Box	12	15 A	1 2	20 A	12	Fuel Tank Pump	M	2200 VA	
						3 4						
	720 VA	C	VRF CC's Units 1-8	12	20 A	5 6	20 A	12	Fuel Management System	M	800 VA	
						7 8	20 A	12	Fuel Tank Pump	M	2200 VA	
	360 VA	H	Infrared Heater IRH-1	12	20 A	9 10						
	360 VA	H	Infrared Heater IRH-2	12	20 A	11 12	20 A	12	Fuel Pump Management System	M	800 VA	
	360 VA	H	Infrared Heater IRH-3	12	20 A	13 14	20 A	12	Wash Station Air Compressor	M	800 VA	
	360 VA	H	Infrared Heater IRH-4	12	20 A	15 16	20 A	12	Wash Station Vaccuum	M	800 VA	
	360 VA	H	Infrared Heater IRH-5	12	20 A	17 18	20 A	12	Wash Bay Controller	M	540 VA	
	360 VA	H	Infrared Heater IRH-6	12	20 A	19 20	20 A	--	Spare	--	--	
	--	--	Space	--	--	21 22	20 A	--	Spare	--	--	
	1975 VA	C	Mini-Split DS/DSCU-1	12	15 A	23 24	20 A	--	Spare	--	--	
						25 26						
						27 28	25 A	10	Condensing Unit ACCU-1	C	4377 VA	
	7700 VA	C	Condensing Unit VRF-CU-1	8	45 A	29 30						
						31 32						
						33 34	25 A	10	Condensing Unit ACCU-2	C	4377 VA	
	6000 VA	H	Fan/Coil: FCU-1	10	30 A	35 36						
						37 38	20 A	12	C Space 201-23	C	2580 VA	
						39 40						
						41 42	20 A	--	Spare	--	--	
	6000 VA	H	Fan/Coil: FCU-2	10	30 A	43 44						
						45 46	25 A	10	Condensing Unit ACCU-4	C	4377 VA	
	3000 VA	H	Fan/Coil: FCU-3	10	25 A	47 48						
						49 50						
	6000 VA	H	Fan/Coil: FCU-4	10	30 A	51 52	25 A	10	Condensing Unit ACCU-5	C	4377 VA	
						53 54						
						55 56	20 A	--	Spare	--	--	
	6000 VA	H	Fan/Coil: FCU-5	10	30 A	57 58	20 A	--	Spare	--	--	
						59 60	20 A	--	Spare	--	--	
						61 62	20 A	--	Spare	--	--	
	--	--	Spare	--	20 A	63 64	20 A	--	Spare	--	--	
	--	--	Spare	--	20 A	65 66	20 A	--	Spare	--	--	

N.E.C. (2017)	Load Type	Conn.	Fct.	Diversity	N.E.C.(2017)	Load Type	Conn.	Fct.	Diversity
220.44	(R)Receptacle				210.20(a)	(L)Lighting			
220.56	(K)Kitchen					(EL)Ext. Ltg.			
220.60	(C)Cooling	30663 VA	100.00%	30663 VA	620.14	(E)Elevators			
220.60	(H)Heating	29160 VA	100.00%	0 VA		(WH)Wat. Htr.			
220.60	(F)Fans				220.5	(MT)Lrg. Motor			
	(M)Misc.	8140 VA	100.00%	8140 VA		(SP)Sub Pnl.			

Total Connected Load: 67963 VA VA = 189 A
Total Load (Diversified): 38803 VA VA = 108 A

Location of Panel: ELEC. 112

PANEL SCHEDULE NOTES

1. PROVIDE HANDLE TIE FOR FIRE ALARM CONTROL PANEL.
2. PROVIDE GFI CIRCUIT BREAKER FOR APPLIANCE CIRCUIT.

DBR
9601 McAllister Freeway, Suite 410
San Antonio, Texas 78216
210.546.0200 p
210.546.0201 f
TBPE Firm Registration No. 2234

DBR Project Number 196023.000

JC	BV	CL	WJ	MC

PROFESSIONAL SEAL

NOT FOR CONSTRUCTION OR PERMITTING; PRINTED FOR REVIEW ONLY
05/22/2019
M. JACQUELINE CHANG, P.E.
TEXAS #124987

LOGO/CONTACT

martinez ARCHITECTS
Martinez Architect, LP
900 Rockmead, Suite 250
Houston, Texas 77339
281.346.7371

DESIGN TEAM

Architectural
Martinez Architects

Civil Engineer
Maverick Engineering

Structural
Matrix Structural engineers

MEP/FP
DBR

Landscape Architect
KDC Associates

Consultant 5 Discipline Type
Consultant 5 Name

FIRE STATION #11
CITY OF MIDLAND
6600 BRIARWOOD AVE
MIDLAND, TX 79707

PROJECT No: **MA 18017**
DATE: **01/14/2020**

ISSUE	Date	Description
100% DESIGN DEVELOPMENT	22-MAY-2019	
75% CONSTRUCTION DOCUMENT	26-JUN-2019	
100% ISSUE FOR PERMIT	30-JUL-2019	
100% ISSUE FOR APPROVAL TO BID	16-JAN-2020	

ELECTRICAL SCHEDULES

E502

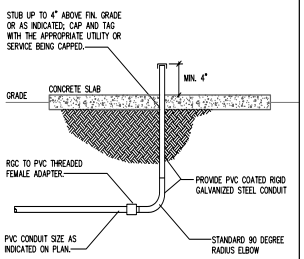

1 CONDUIT STUB UP AND CAP DETAIL
NOT TO SCALE

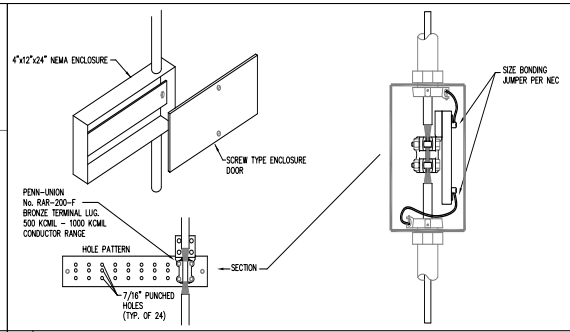

2 TYPICAL GROUNDING BUS DETAIL
NOT TO SCALE

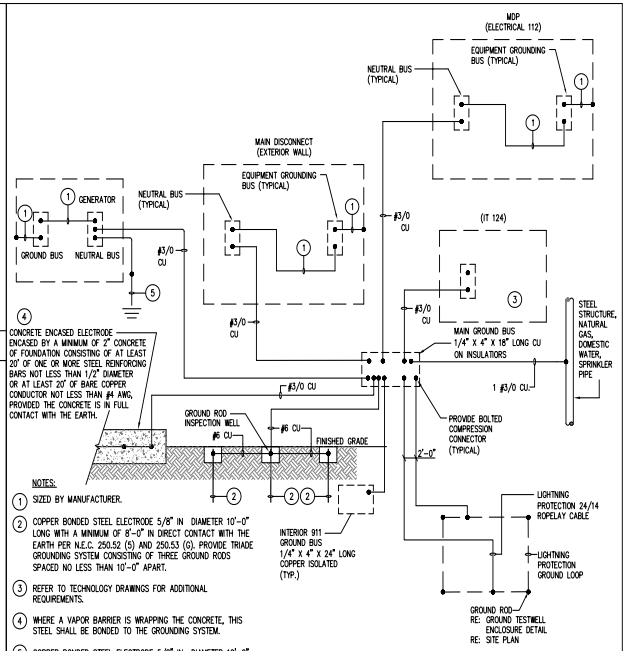

5 GROUNDING ELECTRODE SYSTEM AND BONDING DETAIL WITH RADIO TOWER
NOT TO SCALE

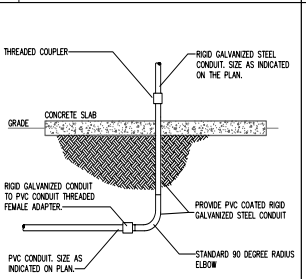

3 CONDUIT STUB UP DETAIL
NOT TO SCALE

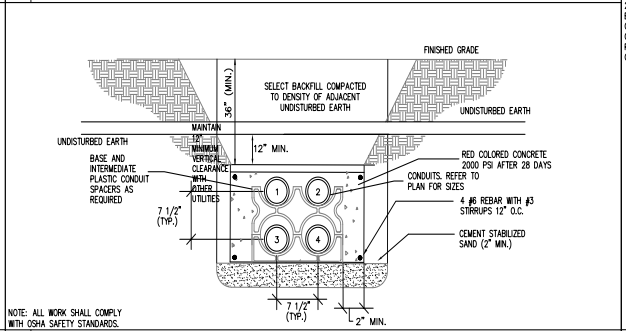

4 SECONDARY SERVICE TRENCH DETAIL
NOT TO SCALE

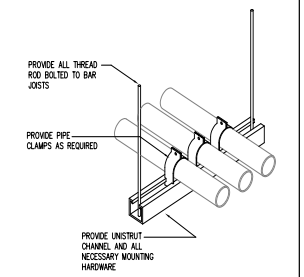

6 UNISTRUT CONDUIT DETAIL
NOT TO SCALE

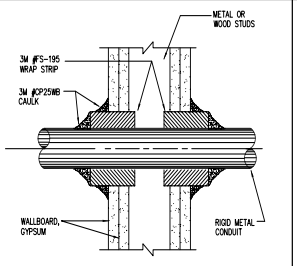

7 1 AND 2 HR. GYPSUM/WALLBOARD PIPE PENETRATION
NOT TO SCALE

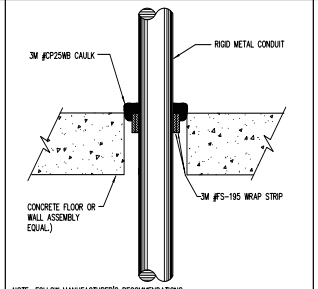

8 2, 3 AND 4 HR. PENETRATIONS FOR CONCRETE FLOOR AND WALL
NOT TO SCALE

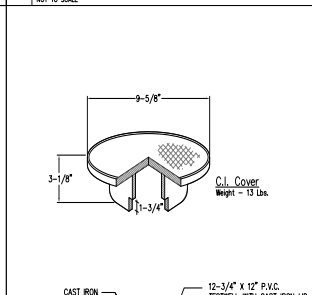

11 GROUND TESTWELL ENCLOSURE
NOT TO SCALE (FOR ALL GROUND RODS)

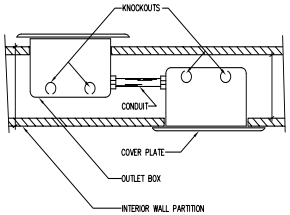

9 BACK-TO-BACK OUTLETS
NOT TO SCALE

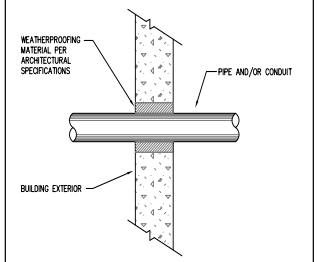

10 PIPE AND/OR CONDUIT PENETRATION
NOT TO SCALE

PROFESSIONAL SEAL

NOT FOR CONSTRUCTION OR PERMITTING; PRINTED FOR REVIEW ONLY
01/14/2020
M. JACQUELINE CHANG, P.E.
TEXAS #124987

martinez ARCHITECTS

Martinez Architect, LP
900 Rockmead, Suite 250
Houston, Texas 77339
281.346.7371

DESIGN TEAM

Architectural
Martinez Architects

Civil Engineer
Consultant 1 Name

Structural
Matrix Structural Engineers

MEP
DBR

Landscaping
KDC Associates

FIRE STATION #11

CITY OF MIDLAND
Briarwood Ave & Golden Gate Dr
Midland, TX 79707

PROJECT No: MA 18017
DATE: 01/14/2020

ISSUE	Date	Description
100% DESIGN DEVELOPMENT	22-MAY-2019	
75% CONSTRUCTION DOCUMENT	26-JUN-2019	
100% ISSUE FOR PERMIT	30-JUL-2019	
100% ISSUE FOR APPROVAL TO BID	16-JAN-2020	

ELECTRICAL DETAILS

E601

DBR
9601 McAllister Freeway, Suite 410
San Antonio, Texas 78216
210.546.0200 v 210.546.0201 f
TBPE Firm Registration NO. 2234

DBR Project Number 196024.000

JC	BV	CL	WJ	MC

4.1459

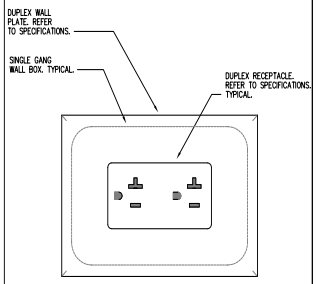

1 HORIZONTAL RECEPTACLE MOUNTING DETAIL
NOT TO SCALE

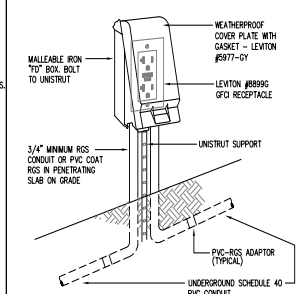

2 RECEPTACLE MOUNTING DETAIL
NOT TO SCALE

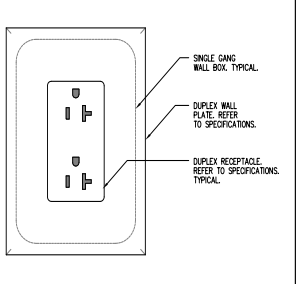

3 TYPICAL RECEPTACLE MOUNTING DETAIL
NOT TO SCALE

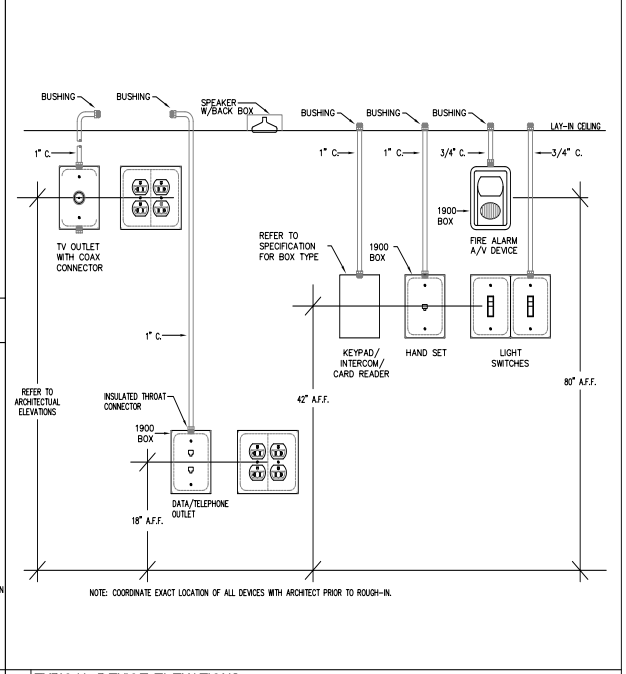

7 TYPICAL DEVICE ELEVATIONS
NOT TO SCALE

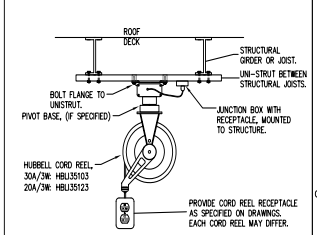

4 CORD REEL MOUNTING DETAIL
NOT TO SCALE
EPR003.DWG

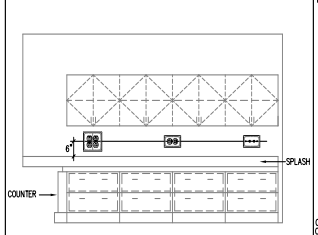

5 TYPICAL COUNTERTOP DEVICE ELEVATION
NOT TO SCALE

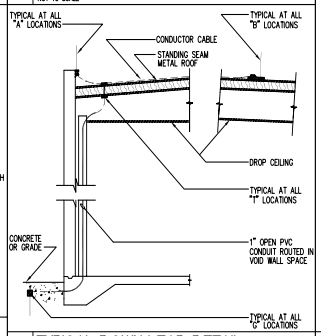

6 TYPICAL DOWN LEAD DETAIL
NOT TO SCALE

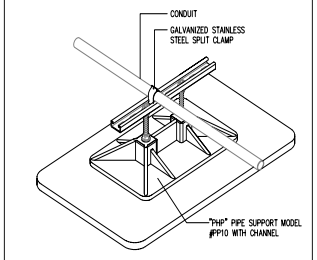

8 CONDUIT SUPPORT DETAIL
NOT TO SCALE

PROFESSIONAL SEAL

NOT FOR CONSTRUCTION OR PERMITTING; PRINTED FOR REVIEW ONLY
01/14/2020
M. JACQUELINE CHANG, P.E.
TEXAS #124697

martinez ARCHITECTS

Martinez Architect, LP
900 Rockmead, Suite 250
Houston, Texas 77339
281.346.7371

DESIGN TEAM

Architectural
Martinez Architects

Civil Engineer
Consultant 1 Name

Structural
Matrix Structural Engineers

MEP
DBR

Landscaping
KDC Associates

FIRE STATION #11

CITY OF MIDLAND

Briarwood Ave & Golden Gate Dr
Midland, TX 79707

PROJECT No: MA 18017
DATE: 01/14/2020

ISSUE	Date	Description
100% DESIGN DEVELOPMENT	22-MAY-2019	
75% CONSTRUCTION DOCUMENT	26-JUN-2019	
100% ISSUE FOR PERMIT	30-JUL-2019	
100% ISSUE FOR APPROVAL TO BID	16-JAN-2020	

ELECTRICAL DETAILS

E602

DBR
9601 McAllister Freeway, Suite 410
San Antonio, Texas 78216
210.546.0200 v 210.546.0201 f
TBPE Firm Registration NO. 2234

DBR Project Number 196024.000

JC	BV	CL	WJ	MC

4.1460

PLUMBING SYMBOLS AND ABBREVIATIONS

(NOT ALL ITEMS INDICATED APPLY TO THIS PROJECT)

ABBREVIATIONS

A

A	AIR (COMPRESSED)
ABV	ABOVE
AC	ABOVE CEILING
AD	ACCESS DOOR, AREA DRAIN
ADJ	ADJUSTABLE
AFF	ABOVE FINISHED FLOOR
AFG	ABOVE FINISHED GRADE
AHU	AIR HANDLING UNIT
AL	ALUMINUM
AP	ACCESS PANEL
ARCH	ARCHITECT, ARCHITECTURAL
AS	AIR SEPARATOR
ASME	AMERICAN SOCIETY OF MECHANICAL ENGINEERS
ASTM	AMERICAN SOCIETY OF TESTING AND MATERIALS
AV	ACID VENT
AVG	AVERAGE
AW	ACID WASTE
AWS	AMERICAN WELDING SOCIETY
AUX	AUXILIARY

B

B	BOILER
BC	BELOW COUNTER
B/C	BACK OF CURB
BF	BELOW FLOOR
BFV	BUTTERFLY VALVE
BH	BOX HYDRANT
BLDG	BUILDING
BM	BENCHMARK
BOF	BOTTOM OF FOOTING
BOS	BOTTOM OF STRUCTURE
BT	BATH TUB
BTU	BRITISH THERMAL UNIT
BV	BALL VALVE
BWV	BACK WATER VALVE

C

C	CELSIUS
CAB	CABINET
CB	CATCH BASIN
CD	CONDENSATE DRAIN LINE
CFM	CUBIC FEET PER MINUTE
CFS	CUBIC FEET PER SECOND
CH	CHILLER
CP	CIRCULATING PUMP
CI	CAST IRON
CIRC	CIRCULATING
CL	CENTERLINE
CLG	CEILING
CLR	CLEAR
CMU	CONCRETE MASONRY UNIT
CPI	CAST IRON PIPE INSTITUTE
CPVC	CHLORINATED POLYVINYL CHLORIDE
CO	CLEAN OUT
COL	COLUMN
COMB	COMBINATION
COMP	COMPRESSOR
CONC	CONCRETE, CONCENTRIC
CONN	CONNECTION
CONT	CONTINOUS,CONTINUATION
CONTR	CONTROLLER, CONTRACTOR
CRAC	COMPUTER ROOM A/C UNIT
CTR	CENTER
CU	COPPER
CW	COLD WATER

D

D	DEPTH, DRAIN, DRYER
DESIG	DESIGNATION
DTL	DETAIL
DF	DRINKING FOUNTAIN
DIA	DIAMETER
DIM	DIMENSION
DISC	DISCONNECT
DN	DOWN
DS	DOWNSPOUT, DOUBLE SUCTION
DW	DISHWASHER
DWG	DRAWING
DWH	DOMESTIC WATER HEATER
DWP	DOMESTIC WATER PUMP

E

EA	EACH
EC	ELECTRICAL CONTRACTOR
ECC	ECCENTRIC
EDF	ELECTRIC DRINKING FOUNTAIN
EFF	EFFICIENCY
EJ	EXPANSION JOINT
EL	ELEVATION
ELEC	ELECTRICAL
ELEV	ELEVATOR
EMERG	EMERGENCY
ENCL	ENCLOSURE
ENGR	ENGINEER
EQ	EQUAL
EQUIP	EQUIPMENT
ET	EXPANSION TANK
ETR	EXISTING TO REMAIN
EXT	EXTERNAL
EXTG	EXISTING

F

F	FARENHEIT, FIRE
FBO	FURNISHED BY OTHERS
FCO	FLOOR CLEAN OUT
FCS	FLOOR CONTROL STATION
FD	FLOOR DRAIN, FIRE DAMPER
FDSC	FIRE DEPARTMENT SIAMESE CONNECTION
FDV	FIRE DEPARTMENT VALVE
FH	FIRE HYDRANT
FHC	FIRE HOSE CABINET
FHR	FIRE HOSE RACK
FIXT	FIXTURE
FLEX	FLEXIBLE
FL	FLOW LINES
FLR	FLOOR
FP	FIRE PUMP
FRZR	FREEZER
FS	FLOW SWITCH, FIRE SPRINKLER
FSK	FLOOR SINK
FT	FOOT, FEET
FUT	FUTURE

G

G	GAS
GA	GAUGE
GAL	GALLON
GALV	GALVANIZED
GC	GENERAL CONTRACTOR
GLV	GLOBE VALVE
GND	GROUND
GPD	GALLONS PER DAY
GPH	GALLONS PER HOUR
GPM	GALLONS PER MINUTE
GV	GATE VALVE

H

HB	HOSE BIBB
HD	HEAD, HUB DRAIN
HORIZ	HORIZONTAL
HP	HORSEPOWER
HKP	HOUSEKEEPING PAD
HSC	HORIZONTAL SPLIT CASE
HT	HEIGHT
HTG	HEATING
HTR	HEATER
HW	HOT WATER
HWR	HOT WATER RETURN
HWS	HOT WATER SUPPLY
HZ	HERTZ

I

ID	INSIDE DIAMETER
IE	INVERT ELEVATION
IN	INCH
INSUL	INSULATION
INT	INTERNAL, INTERIOR
IW	INDIRECT WASTE

J

JP	JOCKEY PUMP

K

KEC	KITCHEN EQUIPMENT CONTRACTOR
KO	KNOCKOUT
KVA	KILOVOLT- AMPS
KW	KILOWATT

L

L	LENGTH, LAVATORY
LAV	LAVATORY
LF	LINEAR FEET
LP	LOW PRESSURE
LRA	LOCKED ROTOR AMPS
LVL	LEVEL
LWCO	LOW WATER CUT OFF

M

MAX	MAXIMUM
MBTUH	THOUSAND OF BTU'S
MC	MECHANICAL CONTRACTOR
MECH	MECHANICAL
MFR	MANUFACTURER
MH	MANHOLE
MI	MALLEABLE IRON
MIN	MINIMUM
MP	MEDIUM PRESSURE
MS	MOP SINK
MTD	MOUNTED
MU	MAKE-UP

N

N.C.	NORMALLY CLOSED
NFPA	NATIONAL FIRE PROTECTION ASSOCIATION
NIC	NOT IN CONTRACT
N.O.	NORMALLY OPEN
NO.	NUMBER
NTS	NOT TO SCALE

O

OC	ON CENTER
OD	OUTSIDE DIAMETER, OVERFLOW DRAIN
OFCU	OUTSIDE AIR FAN COIL UNIT
OPG	OPENING
OS&Y	OPEN STEM AND YOLK
O	MEDICAL OXYGEN

P

P	PUMP, PLUMBING EQUIPMENT
PC	PLUMBING CONTRACTOR
PD	PRESSURE DROP, PLANTER DRAIN
PH	PHASE, POST HYDRANT
PIV	POST INDICATOR VALVE
PLBG	PLUMBING
PNEU	PNEUMATIC
PNL	PANEL
PNTH	PENTHOUSE
PP	POLYPROPYLENE
PPM	PART PER MILLION
PRI	PRIMARY
PRS	PRESSURE REDUCING STATION
PRV	PRESSURE REDUCING VALVE
PSF	POUNDS PER SQUARE FOOT
PSI	POUNDS PER SQUARE INCH
PSIG	POUNDS PER SQUARE INCH GAUGE
PT	PLUMBING TRIM
PV	PLUG VALVE
PVC	POLYVINYL CHLORIDE

Q

QTY	QUANTITY

R

RCP	REFLECTED CEILING PLAN, REINFORCED CONCRETE PIPE
RD	ROOF DRAIN
RE	REFERENCE,REFER
RECIRC	RECIRCULATE
RED	REDUCER
REFR	REFRIGERATOR
REINF	REINFORCING
REQD	REQUIRED
REV	REVISION, REVISE
RM	ROOM
RPM	REVOLUTIONS PER MINUTE
RTU	ROOFTOP UNIT
RV	RELIEF VALVE

S

SCHED	SCHEDULED
SD	STORM DRAIN
SE	SEWAGE EJECTOR
SEC	SECONDARY
SECT	SECTION
SF	SQUARE FEET
SFCS	SPRINKLER FLOOR CONTROL STATION
SH	SHOWER
SHT	SHEET
SIM	SIMILAR
SK	SINK
SP	SUMP PUMP, STATIC PRESSURE
SPEC	SPECIFICATION
SPR	SPRINKLER
SQ	SQUARE
SS	SERVICE SINK
SSD	SUBSURFACE DRAIN
SSFU	SANITARY SEWER FIXTURE UNITS
STD	STANDARD
STL	STEEL
STR	STRAINER
SURF	SURFACE
SUSP	SUSPEND
SV	SANITARY VENT
SW	SOFT WATER

T

TD	TRENCH DRAIN
TDH	TOTAL DYNAMIC HEAD
TH BLK	THRUST BLOCK
TP	TRAP PRIMER
TPD	TRAP PRIMER DEVICE
TYP	TYPICAL

U

U	URINAL
UCD	UNDER CUT DOOR
UG	UNDERGROUND
UH	UNIT HEATER
UL	UNDERWRITERS LABORATORIES, INC.
UNO	UNLESS NOTED OTHERWISE
U/F	UNDERFLOOR
U/S	UNDERSLAB

V

V	VOLT, VENT
VAC	VACUUM(MEDICAL)
VB	VALVE BOX, VACUUM BREAKER
VCP	VITRIFIED CLAY PIPE
VEL	VELOCITY
VERT	VERTICAL
VIB	VALVE IN BOX
VOV	VALVE ON VERTICAL
VP	VACUUM PUMP
VTR	VENT THRU ROOF

W

W	WATT, WASTE, WIDTH, WASHER
W/	WITH
W/O	WITHOUT
WC	WATER CLOSET
WCO	WALL CLEANOUT
WH	WALL HYDRANT
WM	WATER METER
WP	WEATHERPROOF
WPD	WATER PRESSURE DROP
WWF	WELDED WIRE FABRIC
WT	WATERTIGHT, WEIGHT

Y

Y	YARD HYDRANT

Z

Z	ZONE

SYMBOLS

PLUMBING SYSTEMS

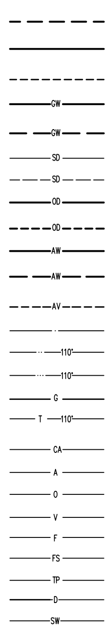

SANITARY DRAIN BELOW FLOOR
SANITARY DRAIN ABOVE FLOOR
SANITARY VENT
GREASE WASTE(ABOVE CEILING)
GREASE WASTE(BELOW FLOOR)
STORM DRAIN(ABOVE CEILING)
STORM DRAIN(BELOW FLOOR)
OVERFLOW DRAIN(ABOVE CEILING)
OVERFLOW DRAIN(BELOW FLOOR)
ACID WASTE(ABOVE CEILING)
ACID WASTE(BELOW FLOOR)
ACID VENT(ABOVE CEILING OR BELOW FLOOR)
COLD WATER
HOT WATER(FINAL DELIVERY TEMPERATURE AS NOTED)
HOT WATER RECIRCULATION (TEMPERATURE AS NOTED)
NATURAL GAS
TEMPERED WATER(FINAL DELIVERY TEMPERATURE AS NOTED)
COMPRESSED AIR
MEDICAL AIR
MEDICAL OXYGEN
MEDICAL VACUUM
FIRE STANDPIPE, FIRE LINE
WET AUTOMATIC FIRE SPRINKLER
TRAP PRIMER
DRAIN LINE
SOFT WATER

SYMBOLS

PIPING FITTINGS

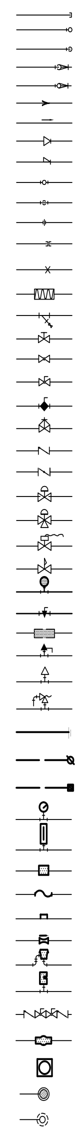

CAP ON END OF PIPE
ELBOW UP
ELBOW DOWN
VALVE IN DROP
VALVE IN RISE
DIRECTION OF FLOW
DIRECTION OF SLOPE DOWN
CONCENTRIC REDUCER
ECCENTRIC REDUCER
TEE OUTLET UP
TEE OUTLET DOWN
UNION
FLANGE
PIPE ANCHOR
EXPANSION JOINT
STRAINER WITH BLOWDOWN VALVE
GATE VALVE, HVAC BALANCING/STOP VALVE
GLOBE VALVE
BALL VALVE
BALANCING VALVE WITH DIFFERENTIAL PRESSURE TAPS
OS&Y VALVE
CHECK VALVE
BUTTERFLY VALVE
TWO-WAY MODULATING CONTROL VALVE
THREE-WAY MODULATING CONTROL VALVE
SOLENOID VALVE
PRESSURE REDUCING VALVE
GAS REGULATOR
GAS COCK
SPRINKLER FLOOR CONTROL STATION
MANUAL AIR VENT
AUTOMATIC AIR VENT
T&P RELIEF VALVE
LINE CLEANOUT/ WALL CLEANOUT
FLOOR CLEANOUT
YARD CLEANOUT
PRESSURE GAUGE WITH GAUGE COCK
THERMOMETER
WATER METER
FLEXIBLE CONNECTION
PRESSURE AND TEMPERATURE TAP
FLOW VENTURI
VACUUM BREAKER
VACUUM RELIEF VALVE
BACKFLOW PREVENTOR
CIRCULATING PUMP
DRAIN(TYPE AND SIZE AS NOTED ON PLANS)
ROOF DRAIN OR OVERFLOW DRAIN
ROOF DRAIN OR OVERFLOW DRAIN(FROM ABOVE)

MISCELLANEOUS

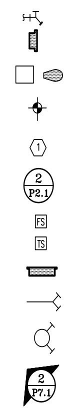

HOSE BIBB
WALL HYDRANT
PLUMBING FIXTURES
POINT OF NEW CONNECTION TO EXISTING PIPING
PLUMBING DRAWING NOTE REFERENCE
DETAIL NUMBER OR PLAN
SHEET WHERE DETAIL OR PLAN IS SHOWN
FLOW SWITCH
TAMPER SWITCH
FIRE HOSE CABINET
FIRE DEPARTMENT SIAMESE CONNECTION(WALL MOUNTED)
FIRE DEPARTMENT SIAMESE CONNECTION(FREE STANDING)
PLUMBING RISER DIAGRAM NUMBER
SHEET WHERE PLUMBING RISER DIAGRAM IS SHOWN

DBR
9601 McAllister Freeway, Suite 410
San Antonio, Texas 78216
210.546.0200 v 210.546.0201 f
TBPE Firm Registration NO. 2234

DBR Project Number 196024.000

JC	BV	CL	WJ	MC

PROFESSIONAL SEAL

NOT FOR CONSTRUCTION OR PERMITTING; PRINTED FOR REVIEW ONLY
01/14/2020
M. JACQUELINE CHANG, P.E.
TEXAS #124987

martinez
ARCHITECTS

Martinez Architect, LP
900 Rockmead, Suite 250
Houston, Texas 77339
281.346.7371

DESIGN TEAM

Architectural
Martinez Architects

Civil Engineer
Consultant 1 Name

Structural
Matrix Structural Engineers

MEP
DBR

Landscaping
KDC Associates

FIRE STATION #11

CITY OF MIDLAND

Briarwood Ave & Golden Gate Dr
Midland, TX 79707

PROJECT No: MA 18017
DATE: 01/14/2020

ISSUE	Date	Description
	22-MAY-2019	100% DESIGN DEVELOPMENT
	26-JUN-2019	75% CONSTRUCTION DOCUMENT
	30-JUL-2019	100% ISSUE FOR PERMIT
	16-JAN-2020	100% ISSUE FOR APPROVAL TO BID

PLUMBING SYMBOLS

P000

4.1461

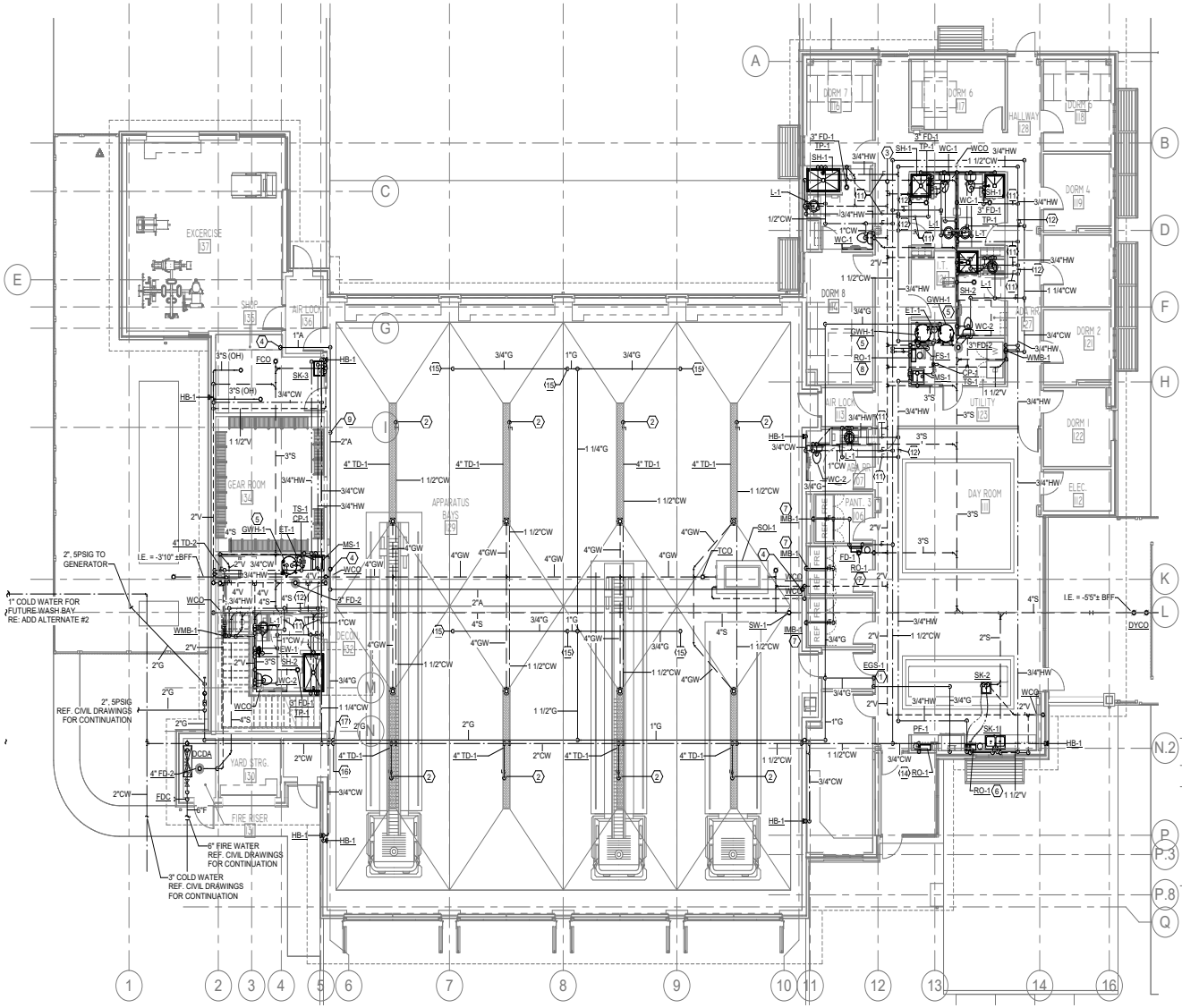

1 P201 **LEVEL 1 PLUMBING PLAN**
1/8" = 1'-0"

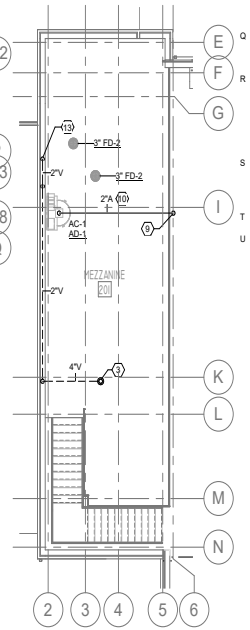

2 P201 **MEZZANINE PLUMBING PLAN**
1/8" = 1'-0"

PLUMBING KEYED NOTES

1. EMERGENCY GAS SHUT-OFF (EGS-1). COORDINATE WITH ELECTRICAL. RE: 9/P601.
2. 1-1/2" WATER FILL FROM OVER HEAD. VALVE AND CAP DROP FOR OWNER INSTALLED EQUIPMENT. VERIFY EXACT LOCATION AND HEIGHT WITH OWNER.
3. 3" VENT UP TO VTR.
4. 1" COMPRESSED AIR DROP. SECURE VERTICAL PIPE TO WALL VALVE AND CAP FOR OWNER INSTALLED EQUIPMENT. VERIFY EXACT LOCATION AND HEIGHT WITH OWNER.
5. 3" DIRECT VENT FROM GAS WATER HEATER (GWH-1). COORDINATE WITH MECHANICAL.
6. RO SYSTEM AND STORAGE TANK (RO-1). ROUTE FILTERED COLD WATER TO FIXTURES (SK-1 AND SK-2).
7. ROUTE FILTERED WATER FROM REVERSE OSMOSIS SYSTEM (RO-1) TO WALL BOXES (IMB-1) SERVING PANTRY REFRIGERATORS.
8. RO SYSTEM AND STORAGE TANK (RO-1). ROUTE FILTERED WATER TO ICE MACHINE.
9. 2" AIR DOWN FROM MEZZANINE.
10. ROUTE PIPE AS HIGH OVERHEAD AS POSSIBLE.
11. VALVE NORMALLY OPEN.
12. VALVE NORMALLY CLOSED.
13. VENT UP FROM BELOW.
14. RO SYSTEM AND STORAGE TANK (RO-1). ROUTE FILTERED WATER TO FIXTURE (PF-1).
15. 3/4" GAS TO INFRA-RED RADIANT HEATER. COORDINATE WITH MECHANICAL.
16. 2" COLD WATER UP; ROUTE AS HIGH AS POSSIBLE IN APPARATUS BAYS.
17. 2" GAS UP; ROUTE AS HIGH AS POSSIBLE IN APPARATUS BAYS.

GENERAL PLUMBING...

A. ALL WORK, METHODS AND INSTALLATIONS INVOLVED IN THE PLUMBING DESIGN SHALL BE IN ACCORDANCE WITH THE PREVAILING BUILDING CODES AND INSPECTION REGULATIONS AND ALL OTHER OFFICIALS HAVING JURISDICTION.

B. PRIOR TO CONSTRUCTION, THE CONTRACTOR IS RESPONSIBLE FOR OBTAINING A COPY OF THE OWNER'S MOST RECENT STANDARDS AND REQUIREMENTS FOR CONSTRUCTION. ALL WORK SHALL BE PERFORMED IN ACCORDANCE WITH SUCH REQUIREMENTS, UNLESS THE PREVAILING CODE OR THESE DOCUMENTS INDICATE A HIGHER STANDARD, WHICH SHALL GOVERN.

C. COORDINATE ROUTING OF PIPING IN CEILING SPACES WITH MECHANICAL AND ELECTRICAL EQUIPMENT, DUCTWORK AND CONDUIT. NOTIFY THE ARCHITECT/ENGINEER OF ANY CONFLICTS PRIOR TO INSTALLING AN ALTERNATE PIPING PLAN.

D. DO NOT ROUGH-IN FOR FIXTURES FROM THESE DRAWINGS. REFER TO LATEST ARCHITECTURAL DRAWINGS FOR DIMENSIONED LOCATIONS.

E. ALL PLUMBING FIXTURE AND DEVICE LOCATIONS AND MOUNTING HEIGHTS SHALL BE COORDINATED IN ADVANCE WITH CASEWORK, MILLWORK, ETC.

F. COORDINATE FIXTURE AND EQUIPMENT LOCATIONS AND CONNECTION REQUIREMENTS WITH LATEST ARCHITECTURAL DRAWINGS, SPECIFICATIONS, AND MANUFACTURER RECOMMENDATIONS PRIOR TO ANY ROUGH-INS.

G. PROVIDE CLEANOUTS, POINT OF USE WATER HEATERS, WATER FILTERS, ETC. IN ACCESSIBLE, BUT NOT IMMEDIATELY VISIBLE LOCATIONS. REFER TO AND COORDINATE WITH ARCHITECTURAL DRAWINGS FOR DIMENSIONS AND DETAILS OF SINK SKIRTS, ADA PANELS, AND MILLWORK.

H. ALL PIPING SHALL BE ROUTED CONCEALED FROM PUBLIC VIEW.

J. ENSURE THAT PIPING ROUTED IN CEILING SPACE IS AT AN ELEVATION ABOVE THE TOP OF WINDOW FRAME HEADS. ENSURE THAT PIPING ROUTED LOW INSIDE WALLS IS BELOW THE ELEVATION OF WINDOW SILLS. PROVIDE OFFSETS IN PIPING AS REQUIRED.

K. ALL VALVES, EQUIPMENT, AND OPERABLE APPURTENANCES SHALL BE LOCATED FREE FROM OBSTRUCTIONS FOR FULL OPERABILITY AND MAINTENANCE ACCESS.

L. ALL PIPING PROVIDED WITHIN RETURN AIR CEILING SPACES SHALL BE PLENUM RATED.

M. INSTALLATIONS WHICH DO NOT ADHERE TO THE REQUIREMENTS INDICATED WITHIN THE CONTRACT DOCUMENTS OR WHICH ARE INCORRECT DUE TO LACK OF FIELD COORDINATION, ETC. SHALL BE CORRECTED SOLELY AT THE CONTRACTOR'S EXPENSE, WITH NO EXCEPTIONS.

N. PROVIDE BALL VALVE SHUT-OFFS ON ALL DOMESTIC WATER BRANCH LINES WITHIN 24" OF THE CORRESPONDING MAIN.

P. ALL DOMESTIC WATER AND SANITARY VENT LINES SERVING FIXTURE GROUPS SHALL HAVE A FULL SIZE HEADER THAT RUNS THE LENGTH OF THE CHASE/WALL SPACE FOR CONNECTION TO ALL FIXTURES. REFER TO PLANS FOR HEADER SIZES, WHICH MAY BE INDICATED BY THE VERTICAL DROP DOWN OR RISE UP FROM THE CHASE. REFER TO PLUMBING FIXTURE SCHEDULE FOR INDIVIDUAL FIXTURE ROUGH-IN CONNECTION SIZES TO HEADER.

Q. VENT HEADERS WITHIN WALLS AND CHASES FOR MULTIPLE FIXTURES SHALL BE PROVIDED AT NO LESS THAN 6" ABOVE THE FLOOD RIM OF THE HIGHEST FIXTURE.

R. FOR EACH FIXTURE INTENDED TO DRAIN INDIRECTLY, PROVIDE THE CODE REQUIRED INDIRECT WASTE PIPE (AND TRAP OR TRAP AND VENT, AS NECESSARY) TO ROUTE THE DRAIN LINE TO THE NEAREST APPROVED INDIRECT WASTE RECEPTOR WITHOUT POSING A TRIP HAZARD. IN FINISHED AREAS ALL SUCH DRAIN LINES SHALL BE CHROME PLATED CAST BRASS.

S. FOR FLOOR MOUNTED WATER HEATERS AND SIMILAR EQUIPMENT, PROVIDE A RECTANGULAR SHAPED 4" THICK CONCRETE HOUSEKEEPING PAD EXTENDING TO BEYOND THE LIMITS OF THE EQUIPMENT FOOTPRINT.

T. PROVIDE AN ACCESSIBLE WALL CLEANOUT AT THE BASE OF EACH SANITARY RISER.

U. NO NATURAL GAS VALVES, UNIONS, OR REGULATORS SHALL BE PERMITTED TO BE INSTALLED ABOVE THE CEILING.

TRUE NORTH | PROJECT NORTH

DBR
9601 McAllister Freeway, Suite 410
San Antonio, Texas 78216
210.546.0200 v 210.546.0201 f
TBPE Firm Registration No. 2234

DBR Project Number 196024.000

JC | BV | CL | WJ | MC

PROFESSIONAL SEAL

NOT FOR CONSTRUCTION OR PERMITTING; PRINTED FOR REVIEW ONLY
01/14/2020
M. JACQUELINE CHANG, P.E.
TEXAS #124087

martinez ARCHITECTS
Martinez Architect, LP
900 Rockmead, Suite 250
Houston, Texas 77339
281.346.7371

DESIGN TEAM

Architectural
Martinez Architects

Civil Engineer
Maverick Engineering

Structural
Matrix Structural engineers

MEP/FP/T
DBR

Landscape Architect
KDC Associates

Consultant 5 Discipline Type
Consultant 5 Name

FIRE STATION #11

CITY OF MIDLAND
6600 BRIARWOOD AVE
MIDLAND, TX 79707

PROJECT No: MA 18017
DATE: 01/14/2020

ISSUE	Date	Description
100% DESIGN DEVELOPMENT	22-MAY-2019	
75% CONSTRUCTION DOCUMENT	26-JUN-2019	
100% ISSUE FOR PERMIT	30-JUL-2019	
100% ISSUE FOR APPROVAL TO BID	16-JAN-2020	

LEVEL 1 & MEZZANINE PLUMBING PLAN

P201

4.1462

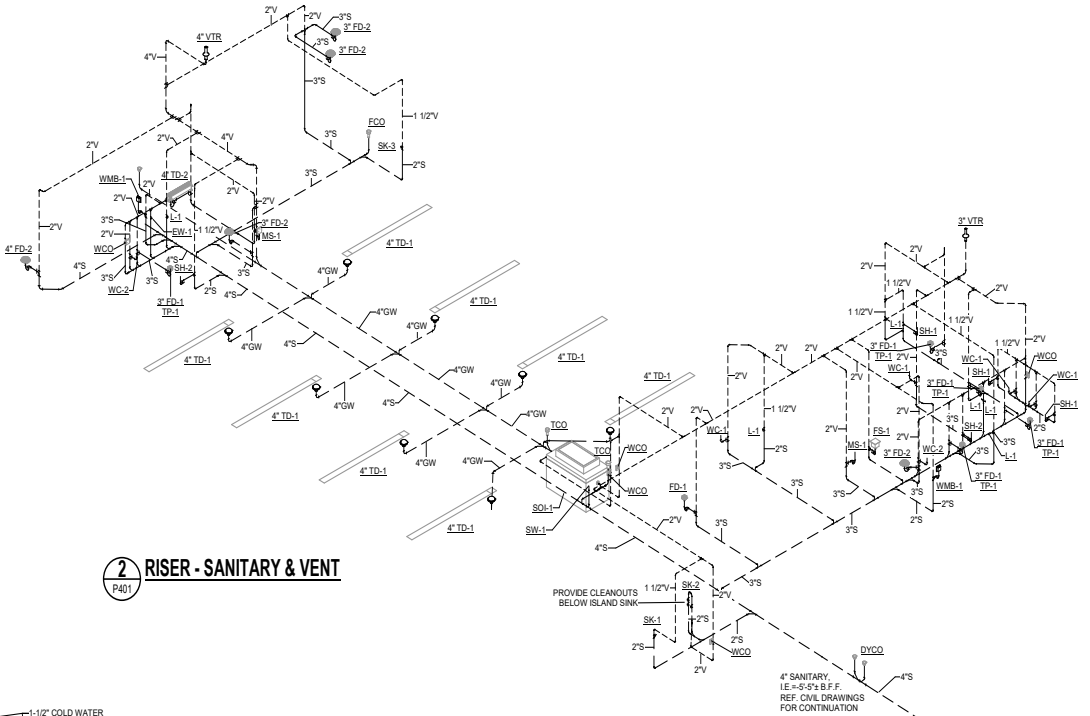

2 P401 RISER - SANITARY & VENT

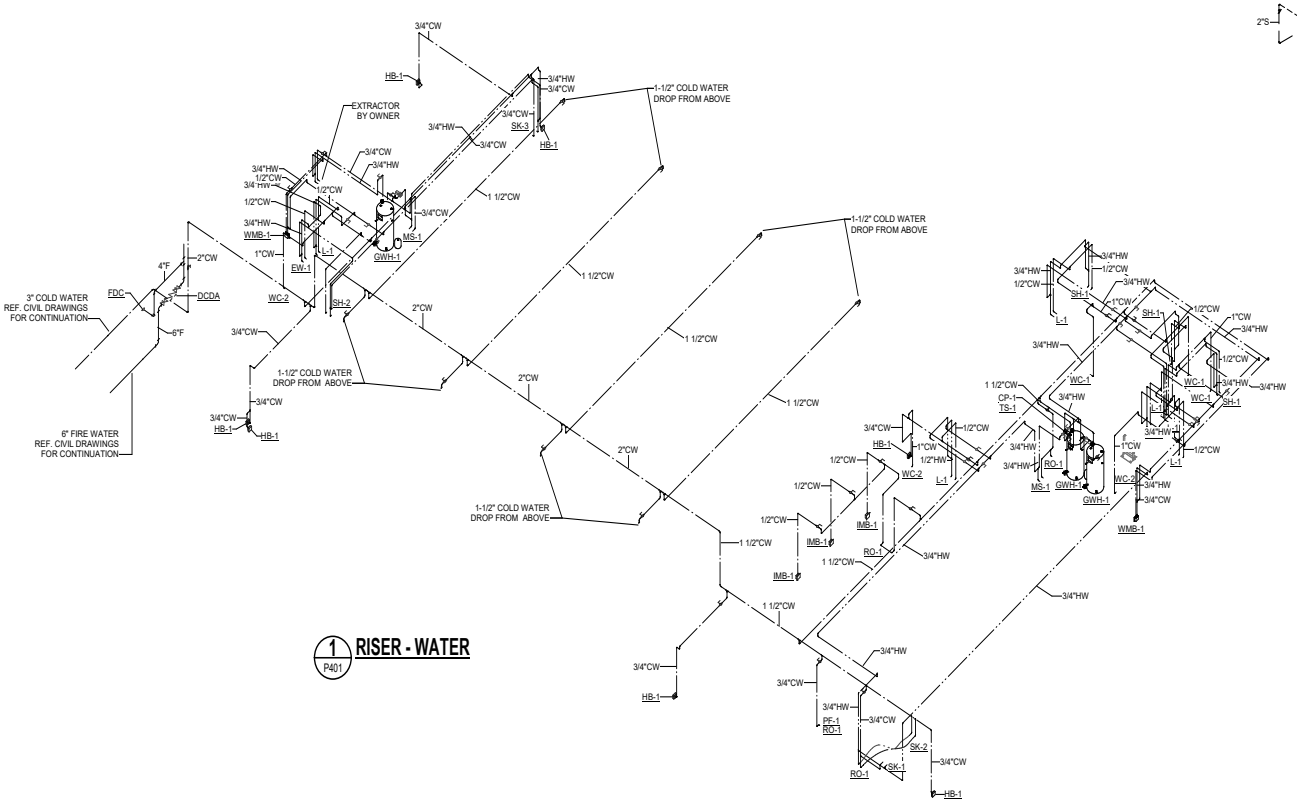

1 P401 RISER - WATER

DBR
9601 McAllister Freeway, Suite 410
San Antonio, Texas 78216
210.546.0200 v 210.546.0201 f
TBPE Firm Registration No. 2234

DBR Project Number 196024.000

JC | BV | CL | WJ | MC

PROFESSIONAL SEAL

NOT FOR CONSTRUCTION OR PERMITTING; PRINTED FOR REVIEW ONLY
01/14/2020
M. JACQUELINE CHANG, P.E.
TEXAS #124087

martinez ARCHITECTS
Martinez Architect, LP
900 Rockmead, Suite 250
Houston, Texas 77339
281.346.7371

DESIGN TEAM

Architectural
Martinez Architects

Civil Engineer
Maverick Engineering

Structural
Matrix Structural engineers

MIE/P/T
DBR

Landscape Architect
KDC Associates

Consultant 5 Discipline Type
Consultant 5 Name

FIRE STATION #11

CITY OF MIDLAND
6600 BRIARWOOD AVE
MIDLAND, TX 79707

PROJECT No: MA 18017
DATE: 01/14/2020

ISSUE	Date	Description
100% DESIGN DEVELOPMENT	22-MAY-2019	
75% CONSTRUCTION DOCUMENT	26-JUN-2019	
100% ISSUE FOR PERMIT	30-JUL-2019	
100% ISSUE FOR APPROVAL TO BID	16-JAN-2020	

PLUMBING RISER DIAGRAMS

P401

4.1463

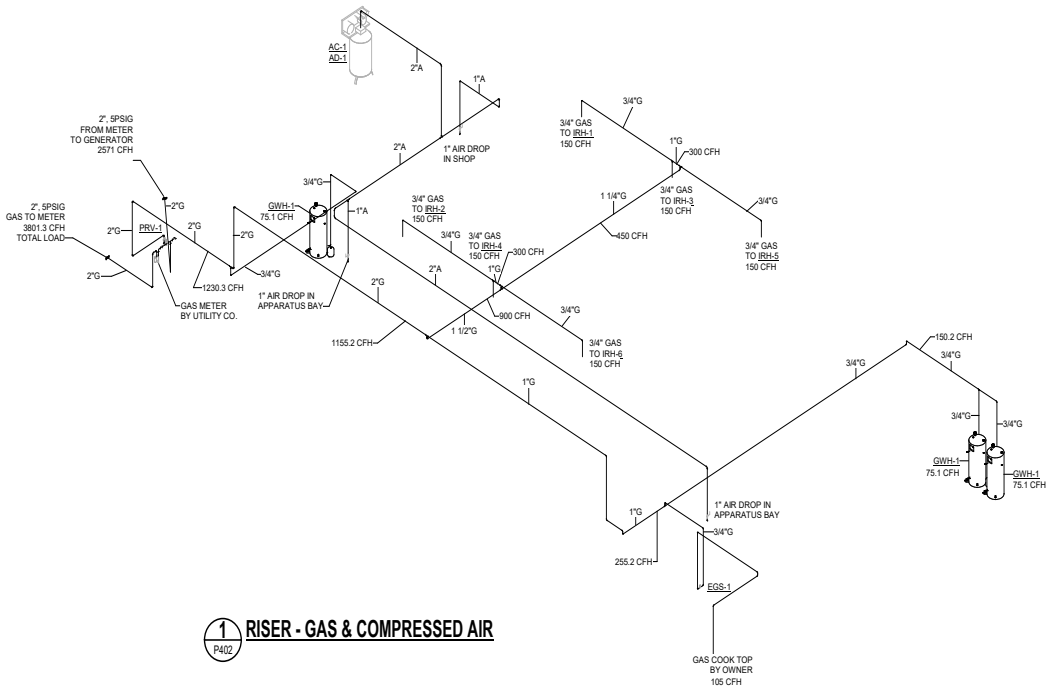

1 P402 **RISER - GAS & COMPRESSED AIR**

DBR
9601 McAllister Freeway, Suite 410
San Antonio, Texas 78216
210.546.0200 v 210.546.0201 f
TBPE Firm Registration No. 2234

DBR Project Number 196024.000

JC	BV	CL	WJ	MC

PROFESSIONAL SEAL

NOT FOR CONSTRUCTION OR PERMITTING; PRINTED FOR REVIEW ONLY
01/14/2020
M. JACQUELINE CHANG, P.E.
TEXAS #124087

martinez ARCHITECTS
Martinez Architect, LP
900 Rockmead, Suite 250
Houston, Texas 77339
281.346.7371

DESIGN TEAM

Architectural
Martinez Architects

Civil Engineer
Maverick Engineering

Structural
Matrix Structural engineers

MEP/T
DBR

Landscape Architect
KDC Associates

Consultant 5 Discipline Type
Consultant 5 Name

FIRE STATION #11

CITY OF MIDLAND
6600 BRIARWOOD AVE
MIDLAND, TX 79707

PROJECT No: **MA 18017**
DATE: **01/14/2020**

ISSUE	Date	Description
100% DESIGN DEVELOPMENT	22-MAY-2019	
75% CONSTRUCTION DOCUMENT	26-JUN-2019	
100% ISSUE FOR PERMIT	30-JUL-2019	
100% ISSUE FOR APPROVAL TO BID	16-JAN-2020	

PLUMBING RISER DIAGRAMS

P402

4.1464

PLUMBING GENERAL NOTES

1. CONTRACTOR SHALL COMPLY WITH ALL LOCAL, STATE, AND FEDERAL CODES AND AUTHORITIES HAVING JURISDICTION AND SHALL MAKE ALL FINAL CONNECTIONS TO FIXTURES AND EQUIPMENT.
2. DO NOT SCALE PLUMBING DRAWINGS. REFER TO DIMENSIONED ARCHITECTURAL OR EQUIPMENT DRAWINGS FOR EXACT LOCATIONS OF FIXTURES OR EQUIPMENT WITH CONNECTIONS.
3. CONTRACTOR SHALL FIELD VERIFY EXACT LOCATIONS AND ELEVATIONS FOR EXISTING POINTS OF CONNECTION WITH ALL SANITARY, STORM DRAINAGE OR OTHER UTILITY PIPING PRIOR TO THE INSTALLATION OF ANY PIPING. THE CONTRACTOR SHALL BE RESPONSIBLE TO ALERT THE ARCHITECT OF GRADING PROBLEMS PRIOR TO COMMENCING WORK WHEN SUCH PROBLEMS EXIST.
4. ALL PIPE PASSING THROUGH FLOORS OR WALLS WHICH ARE FIRE RATED SHALL BE SUPPORTED AT PENETRATION AND SHALL BE SEALED WITH APPROVED FIRE STOP MATERIALS AS REQUIRED BY BUILDING CODES.
5. CONTRACTOR SHALL COORDINATE WITH STRUCTURAL CONDITIONS AT THE SITE AND PROVIDE PROPER ROUGH-IN CONNECTIONS AS REQUIRED WITHOUT DAMAGE TO STRUCTURE. WHERE MODIFICATIONS TO STRUCTURAL MEMBERS ARE REQUIRED THE CONTRACTOR SHALL RECEIVE WRITTEN APPROVAL FROM THE ARCHITECT AND STRUCTURAL ENGINEER PRIOR TO MODIFICATIONS.
6. CONTRACTOR SHALL BE RESPONSIBLE FOR FIELD COORDINATING ALL PLUMBING PIPING AND SLEEVE LOCATIONS WITH ALL OTHER TRADES PRIOR TO INSTALLATION OF ANY PIPING OR SUPPORTS.

FIRE PROTECTION GENERAL NOTES:

1. FIRE SPRINKLER CONTRACTOR TO FIELD VERIFY SPRINKLER HEAD LOCATIONS.
2. SPRINKLER SYSTEM SHALL BE DESIGNED AND INSTALLED BY A STATE LICENSED FIRE PROTECTION CONTRACTOR IN ACCORDANCE WITH ALL LOCAL, STATE, JURISDICTIONAL, GOVERNMENTAL AGENCIES, MIDLAND COUNTY FIRE CODE, AND NFPA 13 (LATEST ADDITION). SPRINKLER SYSTEM MUST ALSO BE APPROVED BY LANDLORD AND LANDLORD'S FIRE INSURANCE UNDERWRITER.
3. SHOP DRAWINGS AND CALCULATIONS SHALL BE SUBMITTED BY THE CONTRACTOR FOR OWNER, LANDLORD, LANDLORD'S FIRE INSURANCE UNDERWRITER, AND FIRE MARSHALL'S APPROVAL.
4. SPRINKLER SYSTEM SHALL CONTAIN NO VALVES DOWNSTREAM OF CONTROL STATION.
5. CONTRACTOR TO DESIGN SPRINKLER SYSTEM AS REQUIRED TO ACCOMMODATE FIXTURES, PARTITIONS, SOFFITS, FURR DOWNS, CEILING HEIGHTS, ETC.
6. FIRE SPRINKLER SYSTEM SHALL PROVIDE COMPLETE AUTOMATIC PROTECTION AND COVERAGE REQUIRED BY THE LOCAL, STATE, JURISDICTIONAL, GOVERNMENTAL AGENCIES, NFPA 13 (LATEST ADDITION), AND THE MIDLAND COUNTY FIRE CODE. THE WORK SHALL INCLUDE BUT NOT BE LIMITED TO VALVE SUPERVISORY SWITCHES, FLOW SWITCHES AND COORDINATION WITH THE LANDLORDS FIRE ALARM SYSTEM.
7. THE SCOPE OF WORK INCLUDES THE INSTALLATION OF SPRINKLER HEADS INCLUDING PIPE, FITTINGS, HANGERS, AND ACCESSORIES. CONTRACTOR SHALL COORDINATE WITH ARCHITECT THE NEW LOCATIONS OF THE SPRINKLER HEADS PRIOR TO INSTALLATION.
8. THE SPRINKLER SYSTEM SHALL BE FULLY CHARGED AND OPERATIONAL WHEN THE CONTRACTOR IS OFF THE SITE.
9. REFER TO LANDLORD'S CRITERIA FOR ADDITIONAL INFORMATION.
10. SPRINKLER HEADS SHALL BE CONCEALED QUICK RESPONSE WITH WHITE ESCUTCHEONS.

PLUMBING FIXTURES GENERAL NOTES

1. CONTRACTOR TO FIELD VERIFY ELEVATIONS AND DIMENSIONS OF FINISHED FLOORS AND WALLS. TRUE ALL DRAINS, ROUGH-INS AND CARRIERS IN ACCORDANCE WITH WITH PROPOSED ELEVATIONS AND FINISHED SURFACES.
2. MOUNTING HEIGHT ELEVATION OF ALL WALL HUNG OR COUNTER MOUNTED FIXTURES SHALL BE COORDINATED WITH THE ARCHITECT PRIOR TO INSTALLATION OF ROUGH-IN WORK.
3. FOR ALL FIXTURES AND EQUIPMENT WITH ASSOCIATED TRIM OR COMPONENT ACCESSORIES PROVIDED UNDER SEPARATE DIVISIONS AND REQUIRING PLUMBING CONNECTIONS; THIS CONTRACTOR SHALL FIELD COORDINATE EXACT REQUIREMENTS OF, MAKE PROVISIONS FOR, AND SUPPLY ALL MATERIALS AND LABOR FOR MAKING FINAL CONNECTIONS.
4. CONTRACTOR SHALL REFER TO SHOP DRAWINGS OF EQUIPMENT TO BE SUPPLIED FOR FINAL COORDINATION OF ALL ROUGH-IN OPENINGS BEFORE BEGINNING WORK.
5. ALL FIXTURE AND EQUIPMENT STUB-OUTS SHALL BE PROVIDED WITH A STOP VALVE. ALL FIXTURE STOPS SHALL BE SOLID BRASS, LOOSE KEY OPERATED, CHROME PLATED (WHERE EXPOSED), AND FITTED TIGHT TO CHROME PLATED BRASS WALL ESCUTCHEON PLATES.
6. ALL ROUGH IN OPENINGS SHALL BE FITTED WITH CHROME PLATED, HEAVY GAGE BRASS ESCUTCHEON PLATES FITTED TIGHT TO THE PIPE.
7. ALL EXPOSED BRASS SHALL BE CHROME PLATED.
8. PROVIDE DEEP SEAL P-TRAP FOR ALL DRAINS.
9. ALL HANDICAPPED ACCESSIBLE FIXTURES INDICATED WITH ♿ SHALL BE PROVIDED OF APPROVED TYPES AND WITH REQUIRED CONTROLS AND INSTALLED TO HEIGHTS AND CLEARANCES, AS PRESCRIBED BY AMERICAN WITH DISABILITIES ACT (ADA). FIXTURES SHALL COMPLY WITH ALL FEDERAL, STATE, AND LOCAL ADA CODE REQUIREMENTS. REFER TO ARCHITECTURAL DRAWINGS FOR ALL DIMENSIONED ADA MOUNTING HEIGHTS AND SPECIFIED CLEARANCES.

GAS LOAD BREAKDOWN

ITEM	BTU	CFH @ 1000 BTU/CF
WATER HEATERS-3 @ 75,100 Ea.	225,300	225.3
RANGE COOK TOP	105,000	105.0
INFRARED RADIANT HEATER (IRH-1)	150,000	150.0
INFRARED RADIANT HEATER (IRH-2)	150,000	150.0
INFRARED RADIANT HEATER (IRH-3)	150,000	150.0
INFRARED RADIANT HEATER (IRH-4)	150,000	150.0
INFRARED RADIANT HEATER (IRH-5)	150,000	150.0
INFRARED RADIANT HEATER (IRH-6)	150,000	150.0
TOTAL LOW PRESSURE LOAD	1,230,300	1,230.3
TOTAL DEVELOPED LENGTH = 250 FT.	SIZING BASED ON TABLE 402.4(3) OF THE IFGC 2015.	
EMERGENCY GENERATOR @ 5PSI FROM MANIFOLD AT METER	2,571,000	2,571.0
TOTAL SITE GAS LOAD	3,801,300	3,801.3

GAS METERING AND PRESSURE REGULATING EQUIPMENT SCHEDULE

EQUIPMENT ITEM	PLAN MARK	GAS QUANTITY C.F.H.	PRESSURE INLET	PRESSURE OUTLET	DISTANCE REGULATOR TO LAST OUTLET	LOCATION	REF: DWG.	SERVICE
GAS METER 1	* * *	3,801.3	5 PSIG	5 PSIG	* * *	SERVICE YARD	MEP01	EMERGENCY GENERATOR AND BUILDING
MAIN REGULATOR 1	PRV-1	1,230.3	5 PSIG	11"-14" W.C.	210 FT.	SERVICE YARD	MEP01	BUILDING

GENERAL NOTES - GAS PIPING AND REGULATORS

1 GAS REGULATORS SHALL BE EQUIPPED WITH SCREENED VENT OPENINGS ORIENTED TO PREVENT THE ENTRANCE OF WATER OR OTHER FOULING MATERIALS. WHEN LOCATED INSIDE THE BUILDING VENTS SHALL BE PIPED TO THE BUILDING EXTERIOR AND TERMINATED WITH A SCREENED OUTLET 90 ELL FITTING POINTED DOWNWARD. PROVIDE LINE SIZE PLUG OR BALL VALVE AND UNION ON INLET; AND TEE WITH TEST COCK DOWNSTREAM OF ALL REGULATOR ASSEMBLIES.

2 ALL GAS PIPE BELOW GRADE AND BELOW CONCRETE SLAB ABUTTING THE BUILDING BASE SLAB SHALL BE RUN IN A CONTINUOUS SLEEVE. SLEEVES SHALL BE OPEN AT EACH END. BURIED END WITH GOOSENECK A MINIMUM OF 5'-0" BEYOND THE EDGE OF THE CONCRETE SLAB; ABOVE GRADE END, BELOW THE POINT OF ENTRY TO THE BUILDING OR ADJACENT TO REGULATORS OR ISOLATING VALVES.

3 GAS SLEEVES SHALL BE SCHEDULE 40 PVC BELOW GRADE AND WELDED SCHEDULE 40 STEEL ABOVE GRADE.

4 SLEEVES VENTED ABOVE GRADE SHALL BE GOOSENECK ASSEMBLIES WITH SCREENED INLETS AND SHALL BE SECURED IN A VANDAL PROOF MANNER.

PLUMBING FIXTURE SCHEDULE

PLAN MARK	MINIMUM ROUGH-IN SIZES WST&VENT	DRAIN	CW	HW	DESCRIPTION
WATER CLOSET WC-1	4"	2"	4"	1"	--- AMERICAN STANDARD No. 3451 WHITE V.C. ELONGATED SIPHON JET FLOOR MOUNT (1.28 GPF) BOWL WITH TOP SPUD, CENTOCO 500STSCC WHITE OPEN FRONT SEAT AND SLOAN ROYAL FLUSH VALVE No. 111-1.28. REFER TO ARCHITECTURAL DWGS. FOR MOUNTING HEIGHT.
WATER CLOSET WC-2 ♿	4"	2"	4"	1"	--- AMERICAN STANDARD No. 3461 WHITE V.C. ELONGATED SIPHON JET FLOOR MOUNT (1.28 GPF) BOWL WITH TOP SPUD, CENTOCO 500STSCC WHITE OPEN FRONT SEAT AND SLOAN ROYAL FLUSH VALVE No. 111-1.28. REFER TO ARCHITECTURAL DWGS. FOR MOUNTING HEIGHT. MOUNTING HEIGHT TO COMPLY WITH ADULT ADA REQUIREMENT.
LAVATORY L-1 ♿	2"	1-1/2"	2"	1/2"	1/2" AMERICAN STANDARD "CADET EVERCLEAN" ROUND, SELF-RIMMING, DROP-IN BASIN No. 0427; WITH AMERICAN STANDARD "MONTERREY" FAUCET No. 7500.170.002. POLISHED CHROME. PROVIDE MCGUIRE No. LK-155A FIXED GRID DRAIN STRAINER, McGUIRE CHROME PLATED CAST BRASS P-TRAP, TAILPIECE. STOPS AND SUPPLIES. PROVIDE TMV-1, TRUEBRO OR EQUAL INSULATION KIT.
SHOWER SH-1	2"	1-1/2"	2"	1/2"	1/2" BRADLEY MODEL No. WS-1WCA INDIVIDUAL COVERALL WALL SHOWER. COMPLETELY PREASSEMBLED WALL SHOWER UNIT. PROVIDE 2" FD-1 FOR BUILT UP SHOWER BASE.
SHOWER SH-2 ♿	2"	1-1/2"	2"	1/2"	1/2" BRADLEY MODEL No. WS-1WCA-ADA INDIVIDUAL COVERALL WALL SHOWER - ADA COMPLIANT, COMPLETELY PREASSEMBLED WALL SHOWER UNIT. PROVIDE 2" FD-1 FOR BUILT UP SHOWER BASE.
KITCHEN SINK 2-COMP SK-1	2"	1-1/2"	2"	1/2"	1/2" ELKAY No. DLR432212; "LUSTERTONE" EQUAL DOUBLE BOWL DROP-IN SINK, 43"x22"x11-1/8". CHICAGO No 1102-HA8-317ABCP DECK MOUNTED 8" FIXED CENTERS FAUCET WITH 8" SWING HIGH ARCH SPOUT, 4" WRISTBLADE HANDLES AND SIDE SPRAY. PROVIDE TMV-1; STOPS, S.S. SUPPLIES, WYE-BRANCH TAILPIECE FOR R0-1 DRAIN, INSINKERATOR BADGER 5 1/2 HP GARBAGE DISPOSAL, AND CHROME PLATED CAST BRASS P-TRAP.
KITCHEN SINK 1-COMP SK-2 ♿	2"	1-1/2"	2"	1/2"	1/2" ELKAY "LUSTERTONE" CLASSIC STAINLESS STEEL SINK, No. LRAD191865PD, 19"X18"X6-1/2". CHICAGO No 1102-HA8-317ABCP DECK MOUNTED 8" FIXED CENTERS FAUCET WITH 8" SWING HIGH ARCH SPOUT, 4" WRISTBLADE HANDLES AND SIDE SPRAY. PROVIDE TMV-1, STOPS, S.S. SUPPLIES, AND CHROME PLATED CAST BRASS P-TRAP, DEARBORN SAFETY SERIES INSULATION KIT WHERE PIPING IS EXPOSED.
SERVICE SINK SK-3	2"	1-1/2"	2"	1/2"	1/2" ELKAY STAINLESS STEEL WALL HUNG SERVICE SINK, No. ESS23192, 23"X18-1/2"X12". ELKAY WALL MOUNT FAUCET WITH 8" HOLE SPREAD, GOOSENECK SPOUT, 4" LEVER HANDLES, No LK940GN05T4H. PROVIDE STOPS, S.S. SUPPLIES, AND CHROME PLATED CAST BRASS P-TRAP.
HOSE BIBB HB-1	---	---	---	3/4"	--- WATTS HOSE BIBB/SILL COCK No. SC8 SERIES; CAST BRASS, WALL MOUNT, TAMPER-PROOF VACUUM BREAKER WITH BREAK-AWAY SCREW, ADJUSTABLE PACKING NUT CARTRIDGE, NO KINK FAUCET WITH TEE HANDLE
MOP SINK MS-1	3"	2"	3"	3/4"	3/4" FIAT MODEL No. MSB 2424 MOP SERVICE BASIN. INCLUDE STAINLESS STEEL BUMPER GUARD AND FIAT WALL MOUNTED FAUCET No. 830-AA WITH TOP BRACE, VACUUM BREAKER, PAIL HOOK, AND STERN WILLIAMS No. T-35 BRACKET AND HOSE. PROVIDE STAINLESS STEEL SPLASH PANELS.
EMERGENCY EYE WASH EW-1 ♿	---	---	---	1/2"	--- GUARDIAN EYE/FACE WASH No. G1750P-T; ORANGE ABS PLASTIC BOWL; TWO (2) FS-PLUS SPRAY HEADS WITH FLIPTOP DUST COVER AND FILTER; POWDER COATED CAST ALUMINUM FLAG HANDLE ACTIVATION; CHROME PLATED STAY-OPEN BALL VALVE WITH TEFLON SEAL. RE: 3/P602.
REVERSE OSMOSIS RO-1	---	---	---	1/2"	--- CULLIGAN MODEL No. LCRO-100AC REVERSE OSMOSIS PRE-ASSEMBLED WALL MOUNT 100 GPD SYSTEM TO INCLUDE CPORT 01004765 9 GALLON STORAGE TANK. INSTALL UNDER KITCHEN SINK AND POT FILLER CABINETS, AT ICE MACHINE(S) AND IN PANTRY AS INDICATED ON PLAN. ROUTE FILTERED WATER TO FIXTURES. RE: 13/P501
BACKFLOW PREVENTER DCDA	---	---	---	6"	--- AMES FIRE & WATERWORKS LFC300 LEAD FREE DOUBLE CHECK DETECTOR. INQUIRE WITH GOVERNING AUTHORITIES FOR LOCAL INSTALLATION REQUIREMENTS. (FIRE PROTECTION)
POT FILLER PF-1	---	---	---	1/2"	--- CHICAGO MODEL No. 515-ABCP WALL MOUNTED SINGLE HOLE POT & KETTLE FILLER FAUCET.
ICE MAKER BOX IMB-1	---	---	---	1/2"	--- PPP ICE MAKER BOX No. MM-500 MIMB. RE: 12/P601.
WASHING MACHINE BOX WMB-1	2"	2"	2"	3/4"	3/4" PPP WASHING MACHINE BOX No. MM-500PLB. RE: 9/P601.
FLOOR SINK FS-1	SEE PLAN	SEE PLAN	SEE PLAN	---	--- WATTS FLOOR SINK No. FS-740 SERIES; CAST IRON BODY, NO HUB OUTLET, PORCELAIN ENAMEL COATED CAST IRON 3/4 GRATE.
FLOOR DRAIN FD-1	SEE PLAN	SEE PLAN	SEE PLAN	---	--- WATTS FLOOR DRAIN No. FD-200 SERIES; EPOXY COATED, CAST IRON BODY, NO HUB OUTLET, SQUARE 6"X6" NICKEL BRONZE STRAINER.
FLOOR DRAIN FD-2	SEE PLAN	SEE PLAN	SEE PLAN	---	--- ZURN No. Z-508-S-G CAST IRON DRAIN WITH 9" DIA. DEEP FLANGE GRATE AND SECONDARY STRAINER. PROVIDE DEEP SEAL P-TRAP.
TRAP PRIMER TP-1	---	---	---	1/2"	--- PROVIDE SLOAN No. VBF-72-A2 FLUSH VALVE VACUUM BREAKER TRAP REFILL SUPPLY. AFFIX TO WATER CLOSET NEAREST TO DRAIN SUPPLIED. ALL EXPOSED TUBING TO BE CHROME PLATED AND RUN AS SHORT AS POSSIBLE TO WALL. CONCEALED DRAIN TUBING SHALL BE 1/2" TYPE 'K' SOFT COPPER SLOPING UNIFORMLY TO DRAIN.
TRENCH DRAIN TD-1 (APPARATUS/ WASH BAYS)	4"	---	---	---	--- J.R. SMITH ZIP TRENCH 12" WIDE 9960 SERIES POLYPROPYLENE TRENCH DRAIN SYSTEM WITH EXTRA HEAVY DUTY, DIN 19580 DUCTILE IRON GRATE.
TRENCH DRAIN TD-2 (LAUNDRY)	4"	2"	---	---	--- BLUCHER MODEL No. B674-14674-08 12" WIDE, 8" DEEP, STAINLESS STEEL TRENCH DRAIN WITH LINT SCREENS.
EMERGENCY GAS SHUTOFF EGS-1	---	---	---	---	--- LACS FIRE HALL CONTROL PANEL. RE: 11/P601.
THERMOSTATIC MIXING VALVE TMV-1	---	---	---	3/4"	3/4" POWERS LFE-480 SERIES ADJUSTABLE THERMOSTATIC, ASSE 1016, POINT OF USE MIXING VALVE WITH INLET CHECK STOPS TO LIMIT HOT WATER TEMPERATURE TO MAXIMUM 105° F. AT FAUCET OUTLET. SUPPLY CW TO MIXING VALVE FROM CW RISER TO FAUCET. INSTALL ALL AS HIGH AS POSSIBLE TO PROVIDE NEAT AND CLEAN APPEARANCE. RE: 5/P602.
FLOOR CLEANOUT FCO	---	---	---	---	--- J.R. SMITH No. 4020 SERIES FINISHED FLOOR CLEANOUT WITH 'TWIS-TO-FLOOR" ADJUSTABLE ROUND NICKEL BRONZE TOP.
GRADE CLEANOUT GCO	---	---	---	---	--- J.R. SMITH No. SQ-4 1388-97 DURO-COATED CAST IRON CLEANOUT WITH WATER TIGHT COUNTER-SUNK PLUG AND SCORIATED CAST IRON TOP WITH FRAME.
TRAFFIC CLEANOUT TCO	---	---	---	---	--- J.R. SMITH No. SQ-4 1388-97 DURO-COATED CAST IRON CLEANOUT WITH WATER TIGHT COUNTER-SUNK PLUG AND SCORIATED CAST IRON TOP WITH FRAME. PROVIDE TRAFFIC RATED BOX.
DOUBLE YARD CLEANOUT DYCO	---	---	---	---	--- J.R. SMITH No. SQ-4 1388-97 DURO-COATED CAST IRON CLEANOUT WITH WATER TIGHT COUNTER-SUNK PLUG AND SCORIATED TOP WITH FRAME. INSTALL IN 18"X18" CONCRETE PAD. RE: 7/P602.
WALL CLEAN-OUT WCO	---	---	---	---	--- ZURN ZN-1443-BP WALL CLEANOUT. DURA-COATED CAST IRON BODY, GAS AND WATERTIGHT ABS TAPERED THREAD PLUG, AND NICKEL BRONZE SECURED SQUARE, SMOOTH WALL ACCESS COVER AND FRAME. RE: 4/P601.

WATER HEATER SCHEDULE

PLAN MARK	MINIMUM ROUGH-IN SIZES WASTE	VENT	DRAIN	CW	HW	DESCRIPTION
GAS WATER HEATER GWH-1	---	---	---	1 1/4"	1 1/4"	A.O. SMITH "PROLINE" No. FCG-100, 98 GALLON STORAGE ASME TANK, 75,100 BTUH INPUT, 81 GPH RECOVERY @ 90° TEMP. RISE, INCLUDES FIXED AUTOMATIC GAS SHUTOFF DEVICE AND PUSH BUTTON SPARK IGNITION.
EXPANSION TANK ET-1	---	---	---	3/4"	---	AMTROL THERM-X-TROL MODEL ST-5-C, ASME THERMAL EXPANSION ABSORBERS, MAXIMUM WORKING PRESSURE 150 PSIG, TOTAL VOLUME 2.1 GALLONS.
CIRCULATION PUMP CP-1	---	---	---	---	3/4"	GRUNDFOS No. UP43-75F ALL BRONZE FLANGED RECIRCULATION PUMP, WIRED FOR 120/60/1 POWER WITH 1/6 HP MOTOR AND FITTED WITH REMOTE HEAT SENSING AQUASTAT CONTROLLER WITH TS-1 SHUT-OFF TIMER. RE: 6/P602
TIME SWITCH TS-1	---	---	---	---	---	INTERMATIC DIGITAL 24 HOUR TIME SWITCH WITH BATTERY BACK-UP. INSTALL ON WALL ADJACENT TO CIRCULATION PUMP. COORDINATE POWER REQUIREMENTS WITH ELECTRICAL CONTRACTOR. RE: 7 & 8/P601

AIR COMPRESSOR FIXTURE SCHEDULE

PLAN MARK	MINIMUM ROUGH-IN SIZES WASTE	VENT	DRAIN	CW	HW	DESCRIPTION
AIR COMPRESSOR AC-1	---	---	---	---	---	INGERSOLL RAND No. 2475N7.5-P 80 GALLON VERTICAL RECEIVER, TWO STAGE AIR COMPRESSOR. 7.5 HP, 208V, 3Ø AND 24.3 CFM AT 175 PSI MAXIMUM PRESSURE. PROVIDE WITH INGERSOLL RAND MOTOR STARTER KIT. COORDINATE POWER REQUIREMENTS WITH ELECTRICAL CONTRACTOR.
AIR DRYER AD-1	---	---	---	---	---	INGERSOLL RAND No. D72IN AIR DRYER (0.37 KW) CAPABLE OF 42 CFM AT 100 PSI. COORDINATE 120V/1PH POWER WITH ELECTRICAL CONTRACTOR.

SAND OIL SEPARATOR SCHEDULE

CALCULATIONS

SOI-1: 11 TRENCH DRAINS x 8 DFU x 0.25 USAGE FACTOR x 3 GPM/DFU = 66.0 GPM

TOTAL FLOWRATE = 66.0 GPM

PLAN MARK	MAKE & MODEL NO.	DESCRIPTION
SOI-1 SAND/OIL SEPARATOR	PARK EQUIPMENT COMPANY SOCMP-750-75 WITH GAS TIGHT COVERS	750 US GAL LIQUID CAPACITY; 375 GAL OIL CAPACITY; 9,900 LBS EMPTY WEIGHT; 7'-10" LONG x 4'-4" WIDE x 6'-0" DEEP; INLET FL1= 4'-5"; OUTLET FL2= 4'-2"; 75 GPM FLOW RATE
SW-1 SAMPLING WELL	PARK EQUIPMENT COMPANY SWG-156 WITH GAS TIGHT COVERS	PRECAST CONCRETE SAMPLING WELL WITH HEAVY DUTY CAST IRON FRAME AND COVER. PIPE SIZE IS 4".

SHOCK ARRESTER SCHEDULE

P.D.I. SYMBOL	FIXTURE UNITS	SIZE
A	1-11	1/2" NPT
B	12-32	3/4" NPT
C	33-60	1" NPT
D	61-113	1 1/4" NPT
E	114-154	1 1/2" NPT
F	155-330	2" NPT

SHOCK ARRESTORS SHALL HAVE LIFETIME WARRANTY AND SHALL BE CERTIFIED BY THE MANUFACTURER TO BE SUITABLE FOR INSTALLATION WITHOUT REQUIREMENT FOR ACCESS DOORS.

DBR
9601 McAllister Freeway, Suite 410
San Antonio, Texas 78216
210.546.0200 v 210.546.0201 f
TBPE Firm Registration NO. 2234

DBR Project Number 196024.000

JC	BV	CL	WJ	MC

PROFESSIONAL SEAL

NOT FOR CONSTRUCTION OR PERMITTING; PRINTED FOR REVIEW ONLY
01/14/2020
M. JACQUELINE CHANG, P.E.
TEXAS #124697

martinez ARCHITECTS
Martinez Architect, LP
900 Rockmead, Suite 250
Houston, Texas 77339
281.346.7371

DESIGN TEAM

Architectural
Martinez Architects

Civil Engineer
Consultant 1 Name

Structural
Matrix Structural Engineers

MEP
DBR

Landscaping
KDC Associates

FIRE STATION #11

CITY OF MIDLAND

Briarwood Ave & Golden Gate Dr
Midland, TX 79707

PROJECT No: MA 18017
DATE: 01/14/2020

ISSUE Date Description

100% DESIGN DEVELOPMENT 22-MAY-2019
75% CONSTRUCTION DOCUMENT 26-JUN-2019
100% ISSUE FOR PERMIT 30-JUL-2019
100% ISSUE FOR APPROVAL TO BID 16-JAN-2020

PLUMBING SCHEDULES

P501

4.1465

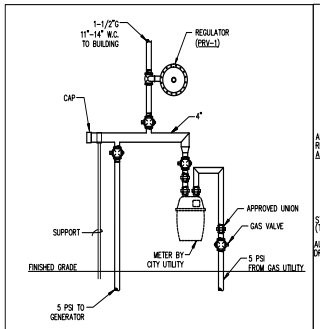

1 MULTI OUTLET GAS MANIFOLD DETAIL
NOT TO SCALE

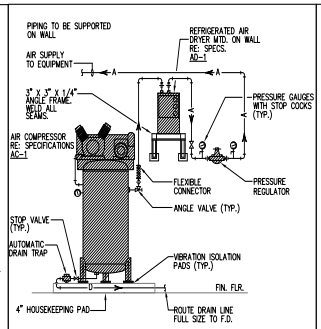

2 AIR COMPRESSOR DETAIL
NOT TO SCALE

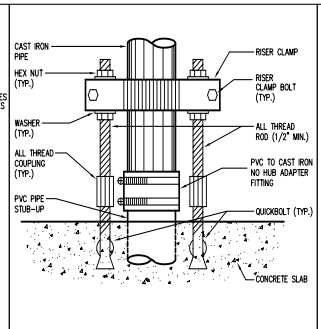

3 PVC TO CAST IRON SUPPORT DETAIL
NOT TO SCALE

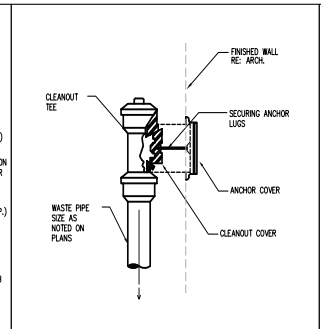

4 WALL CLEANOUT DETAIL (WCO)
NOT TO SCALE

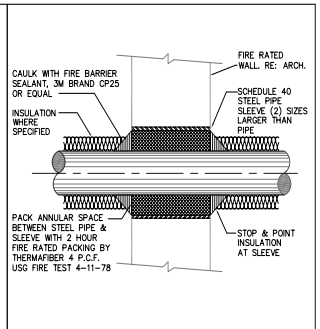

5 PIPE THROUGH FIRE-RATED WALL
NOT TO SCALE

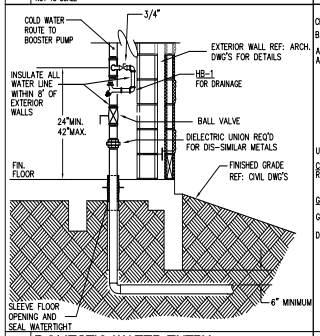

6 DOMESTIC WATER ENTRY
NOT TO SCALE

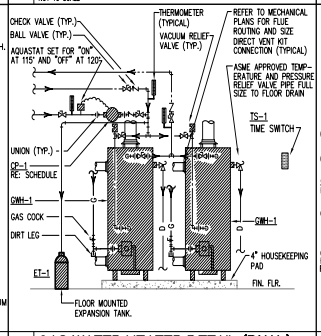

7 GAS WATER HEATER DETAIL (DUAL)
NOT TO SCALE

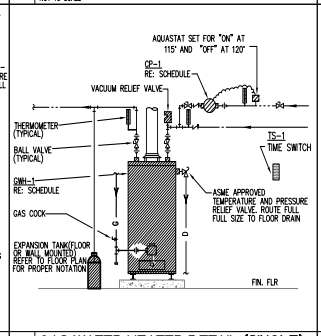

8 GAS WATER HEATER DETAIL (SINGLE)
NOT TO SCALE

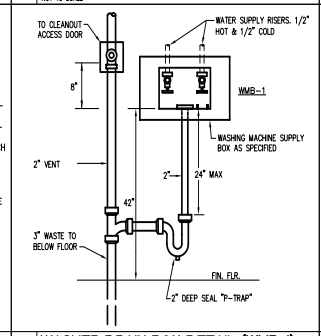

9 WASHER DRAIN BOX DETAIL (WMB-1)
NOT TO SCALE

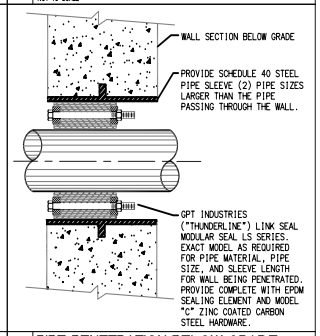

10 PIPE PENETRATION BELOW GRADE
NOT TO SCALE

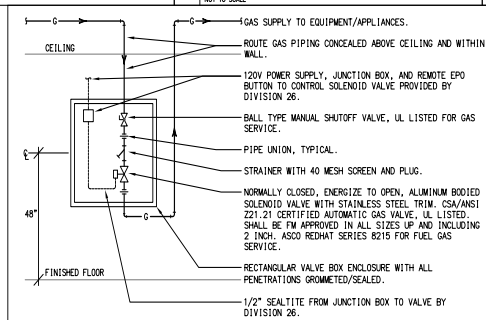

11 EMERGENCY GAS SHUT-OFF DETAIL (EGS-1)
NOT TO SCALE

GENERAL NOTES:

1. REFER TO PLAN DRAWINGS FOR PIPE SIZES.
2. VALVES SHALL BE LINE SIZED.
3. COORDINATE ROUGH-INS AND INSTALLATION IN FIELD AMONGST THE TRADES.
4. PIPING AND APPURTENANCES SHALL BE SECURELY SUPPORTED WITHIN VALVE BOX.
5. DETAIL DEPICTS A "DOWN-FEED" INSTALLATION TO THE CONTROL VALVE. OTHER PIPE ROUTING ARRANGEMENTS SHALL BE SIMILARLY CONFIGURED.
6. VALVE BOX SHALL BE: FULLY RECESSED TYPE UNLESS NOTED OTHERWISE ON DRAWINGS; CONSTRUCTED OF 16 GAUGE SATIN FINISH STAINLESS STEEL OR ENAMELED FINISHED STEEL/PRIME COATED GALVANNEALED STEEL (PROVIDED IN OR PAINTED FINAL COLOR AS SELECTED BY ARCHITECT/OWNER); COMPLETE WITH CONCEALED CONTINUOUS PIANO HINGE AND WITH SCREWDRIVER LATCH OR CYLINDER KEYED LOCK AS SELECTED BY ARCHITECT/OWNER. PROVIDE IN DIMENSIONS AS SUITED FOR PIPE/VALVE SIZES AND TO ENSURE MAINTENANCE ACCESS - TYPICALLY 18"W X 30"H X 6" D, COORDINATE IN FIELD. MANUFACTURED BY LACS, ELMDOR, ACUDOR, OR MIFAB.

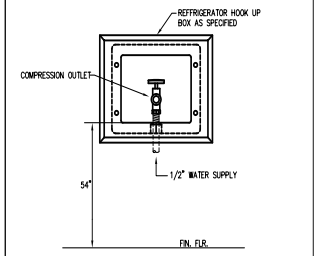

12 WALL BOX DETAIL (IMB-1)
NOT TO SCALE

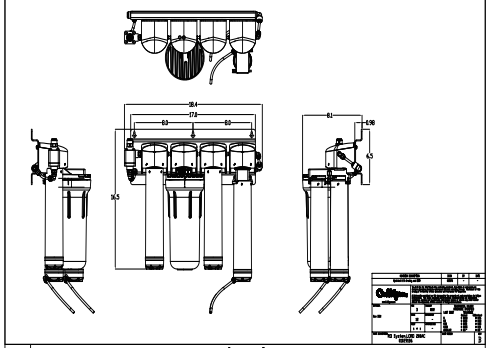

13 REVERSE OSMOSIS DETAIL (RO-1)
NOT TO SCALE

DBR
9601 McAllister Freeway, Suite 410
San Antonio, Texas 78216
210.546.0200 v 210.546.0201 f
TBPE Firm Registration NO. 2234

DBR Project Number 196024.000

JC	BV	CL	WJ	MC

PROFESSIONAL SEAL

NOT FOR CONSTRUCTION OR PERMITTING; PRINTED FOR REVIEW ONLY
01/14/2020
M. JACQUELINE CHANG, P.E.
TEXAS #124697

martinez ARCHITECTS
Martinez Architect, LP
900 Rockmead, Suite 250
Houston, Texas 77339
281.346.7371

DESIGN TEAM

Architectural
Martinez Architects

Civil Engineer
Consultant 1 Name

Structural
Matrix Structural Engineers

MEP
DBR

Landscaping
KDC Associates

FIRE STATION #11

CITY OF MIDLAND

Briarwood Ave & Golden Gate Dr
Midland, TX 79707

PROJECT No: MA 18017
DATE: 01/14/2020

ISSUE	Date	Description
100% DESIGN DEVELOPMENT	22-MAY-2019	
75% CONSTRUCTION DOCUMENT	26-JUN-2019	
100% ISSUE FOR PERMIT	30-JUL-2019	
100% ISSUE FOR APPROVAL TO BID	16-JAN-2020	

PLUMBING DETAILS

P601

4.1466

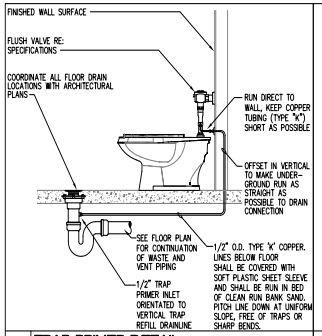

1 TRAP PRIMER DETAIL
NOT TO SCALE

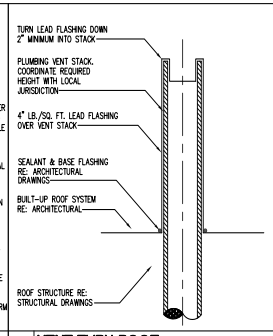

2 VENT THRU ROOF
NOT TO SCALE

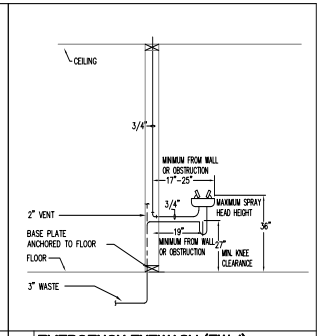

3 EMERGENCY EYEWASH (EW-1)
NOT TO SCALE

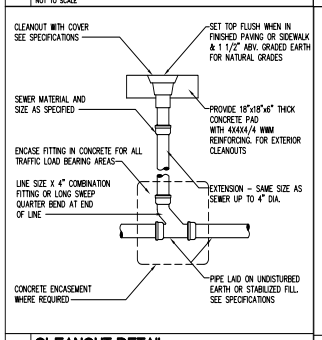

4 CLEANOUT DETAIL
NOT TO SCALE

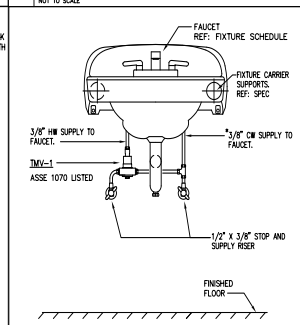

5 TMV INSTALLATION DETAIL
NOT TO SCALE

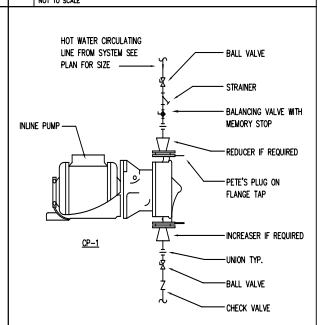

6 IN-LINE CIRCULATING PUMP DETAIL
NOT TO SCALE

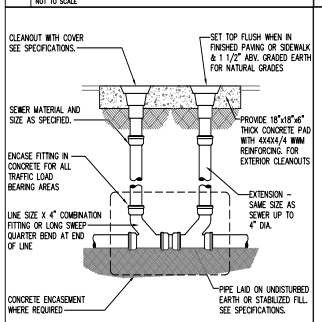

7 DOUBLE YARD CLEAN-OUT (DYCO)
NOT TO SCALE

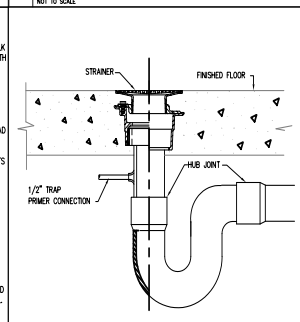

8 FLOOR DRAIN DETAIL (FD-1)
NOT TO SCALE

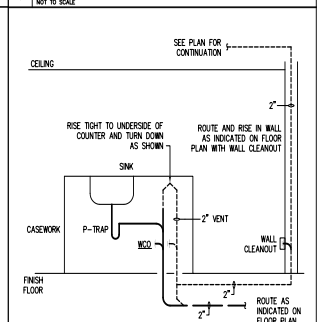

9 ISLAND VENT DETAIL
NOT TO SCALE

DBR
9601 McAllister Freeway, Suite 410
San Antonio, Texas 78216
210.546.0200 v 210.546.0201 f
TBPE Firm Registration NO. 2234

DBR Project Number 196024.000

JC	BV	CL	WJ	MC

PROFESSIONAL SEAL

NOT FOR CONSTRUCTION OR PERMITTING; PRINTED FOR REVIEW ONLY
01/14/2020
M. JACQUELINE CHANG, P.E.
TEXAS #124697

martinez ARCHITECTS
Martinez Architect, LP
900 Rockmead, Suite 250
Houston, Texas 77339
281.346.7371

DESIGN TEAM

Architectural
Martinez Architects

Civil Engineer
Consultant 1 Name

Structural
Matrix Structural Engineers

MEP
DBR

Landscaping
KDC Associates

FIRE STATION #11

CITY OF MIDLAND
Briarwood Ave & Golden Gate Dr
Midland, TX 79707

PROJECT No: MA 18017
DATE: 01/14/2020

ISSUE	Date	Description
100% DESIGN DEVELOPMENT	22-MAY-2019	
75% CONSTRUCTION DOCUMENT	26-JUN-2019	
100% ISSUE FOR PERMIT	30-JUL-2019	
100% ISSUE FOR APPROVAL TO BID	16-JAN-2020	

PLUMBING DETAILS

P602

4.1467

TECHNOLOGY GENERAL NOTES

1. CONTRACTOR SHALL COORDINATING WITH DBR ENGINEERING PRIOR TO THE INSTALLATION OF RACKS AND RACK EQUIPMENT. NO RACKS SHALL BE PERMANENTLY INSTALLED WITHOUT WRITTEN APPROVAL OF THE PROPOSED LOCATIONS.
2. THE SELECTED, INSTALLING CONTRACTOR MUST BE A CERTIFIED INTEGRATOR/INSTALLER AUTHORIZED BY THE SPECIFIED SYSTEM MANUFACTURER TO INSTALL THE CABLE PLANT AND CONNECTIVITY PRODUCTS. REFER TO SPECIFICATIONS FOR PRODUCT TYPE AND DESCRIPTION.
3. SYSTEM WIRING AND EQUIPMENT INSTALLATION SHALL BE IN ACCORDANCE WITH GOOD ENGINEERING PRACTICES AS ESTABLISHED BY ANSI/EIA/TIA, BICSI, AND THE NEC.
4. ALL WIRING SHALL MEET ALL STATE AND LOCAL ELECTRICAL CODES.
5. ALL TELECOMMUNICATIONS SYSTEMS EQUIPMENT AND MOUNTING LOCATIONS SHALL BE IN COMPLIANCE WITH ADA ACCESSIBILITY STANDARDS.
6. ALL INDUSTRY STANDARD CATEGORY 6 CABLING PRACTICES MUST BE FOLLOWED FOR ALL DATA CABLING.
7. ALL DATA CABLES ARE TO BE INSTALLED WITH A MINIMUM OF 12 INCHES OF SEPARATION FROM AC POWER CABLES, INTERCOM, FIRE ALARM, SECURITY CABLES IN ANY PARALLEL OPEN WIRE RUN.
8. ALWAYS CROSS OTHER SYSTEM CABLES AT A 90 DEGREE ANGLE.
9. ALL CABLES AND TERMINATION COMPONENTS SHALL BE MACHINE LABELED AT BOTH ENDS. LABEL ALL CABLES PER TS DRAWINGS AND/OR SPECIFICATIONS. FINAL CABLE/OUTLET IDENTIFICATION LABELS SHALL BE COORDINATED WITH THE OWNER AND DBR.
10. CONTRACTOR TO PROVIDE LIGHTNING PROTECTION ON ALL COMMUNICATION CABLE BETWEEN BUILDINGS.
11. ALL EXPOSED CABLING ROUTED IN PLENUM SHALL BE PLENUM-RATED. ALL NON PLENUM-RATED CABLING INSTALLED IN PLENUM SPACES SHALL BE INSTALLED IN CONDUIT.
12. NO TERMINATION OR SPLICES SHALL BE INSTALLED IN OR ABOVE CEILINGS UNLESS NOTED NOTED OTHERWISE.
13. CONTRACTOR SHALL MAINTAIN WALL RATING WITH PROPER FIRE BLOCKING METHODS.
14. ALL CABLE INSTALLED SHALL ROUTE TO THE CENTER OF THE ROOM IN WHICH IT SERVES AND THEN TO THE OUTLET LOCATION IT IS INTENDED FOR. EACH CABLE SHALL HAVE A 10' SERVICE LOOP AT THE CENTER OF EACH ROOM AND A 3' SERVICE LOOP ABOVE EACH OUTLET LOCATION.
15. THE SYSTEM INSTALLER SHALL PROPERLY SUPPORT ALL INSTALLED SYSTEM CABLING FROM A PANDUIT J-MOD CABLE SUPPORT SYSTEMS AS DETAILED IN SPECIFICATIONS. NO CABLING SHALL BE ROUTED AND TIED DIRECTLY TO BUILDING STEEL, CEILING GRID SUPPORT, CONDUIT, PIPING, OR DUCTWORK. PANDUIT J-MOD SUPPORT SYSTEM SHALL BE DIRECTLY CONNECTED TO THE BUILDING'S STEEL JOIST. IN LOCATION WHERE THE BOTTOM OF THE JOIST IS MORE THAN 5' ABOVE THE CEILING, THE SYSTEM INSTALLER SHALL PROVIDE AND INSTALL THREADED ROD AND ALL REQUIRED MATERIALS TO CONNECT THE THREADED ROD TO THE BUILDING STEEL AND THE CABLE SUPPORT SYSTEM TO THE THREADED ROD. CABLE PATHWAY SHALL NOT BE HIGHER THAN 5' ABOVE THE CEILING AT ANY LOCATIONS.
16. STRUCTURED CABLING SYSTEM CONTRACTOR SHALL PROVIDE ONE (1) CATEGORY 6 CABLE TO EACH VIDEO SURVEILLANCE CAMERA ON THE ENTIRE PROJECT. PROVIDE AN ABOVE CEILING BOX AT EACH AND TERMINATE THE CIRCUIT WITH AN RJ45 INSERT. PROVIDE ONE (1) 20' PLENUM PATCH CABLE AT THE DEVICE END OF EACH LOCATION.
17. STRUCTURED CABLING SYSTEM CONTRACTOR SHALL PROVIDE ONE (1) CATEGORY 6 CABLE TO EACH ACCESS CONTROLLED DOOR ON THE ENTIRE PROJECT. PROVIDE AN ABOVE CEILING BOX AT EACH AND TERMINATE THE CIRCUIT WITH AN RJ45 INSERT. PROVIDE ONE (1) 20' PLENUM PATCH CABLE AT THE DEVICE END OF EACH LOCATION.
18. CONTRACTOR TO PROVIDE AND INSTALL ALL REQUIRED CABLING AND COMPONENTS TO FURNISH TWO (2) ANALOG TELEPHONE CABLES TO THE FIRE ALARM SYSTEM. CONTRACTOR TO COORDINATE WITH THE SYSTEM INSTALLER FOR EXACT LOCATIONS AND TERMINATION INSTRUCTIONS PRIOR TO INSTALLATION.
19. CONTRACTOR TO PROVIDE AND INSTALL ALL REQUIRED CABLING AND COMPONENTS TO FURNISH ONE (1) ANALOG TELEPHONE CABLES TO EACH ELEVATOR MACHINE ROOM ON THE PROJECT. CONTRACTOR TO COORDINATE WITH SYSTEM INSTALLERS FOR EXACT LOCATIONS AND TERMINATION INSTRUCTIONS PRIOR TO INSTALLATION.
20. CONTRACTOR TO PROVIDE AND INSTALL ALL REQUIRED CABLING AND COMPONENTS TO FURNISH TWO (2) CATEGORY 6 CABLES TO BUILDING AUTOMATION SYSTEM. (1) CABLE SHALL BE INSTALLED AT +18" AFF FOR TECHNICIAN NETWORK CONNECTIVITY AND THE OTHER SHALL PROVIDE CONNECTIVITY TO THE SYSTEM. CONTRACTOR TO COORDINATE WITH SYSTEM INSTALLERS FOR EXACT LOCATIONS AND TERMINATION INSTRUCTIONS PRIOR TO INSTALLATION.
21. CONTRACTOR TO PROVIDE AND INSTALL (1) CATEGORY 6 CABLE TO THE BUILDING'S ACCESS CONTROL HEAD END PANEL. TERMINATION OF THIS CABLE SHALL BE COORDINATED WITH THE SYSTEM INSTALLER.
22. CONTRACTOR TO PROVIDE AND INSTALL (1) CATEGORY 6 CABLE TO THE BUILDING'S INTRUSION DETECTION CONTROL PANEL. TERMINATION OF THIS CABLE SHALL BE COORDINATED WITH THE SYSTEM INSTALLER.

TECHNOLOGY LEGEND

GROUP	SYMBOL	DESCRIPTION
DEVICES	▽	INDICATES THE LOCATION OF A NEW TECHNOLOGY OUTLET. CONTRACTOR TO PROVIDE FACEPLATE WITH A MINIMUM OF 4-PORTS AT EACH LOCATION UNLESS OTHERWISE NOTED. ELECTRICAL CONTRACTOR TO PROVIDE A DOUBLE GANG BACK BOX WITH A SINGLE GANG REDUCER RING AND A 1" EMT CONDUIT FROM THE BOX TO THE NEAREST ACCESSIBLE CEILING. SOME EXISTING BUILDINGS MAY REQUIRE SURFACE MOUNTED RACEWAY. ELECTRICAL CONTRACTOR TO PROVIDE AND INSTALL RACEWAY AS SPECIFIED AND DESCRIBED IN THE ELECTRICAL CONTRACT DOCUMENTS. SYSTEM INSTALLER TO PROVIDE AND INSTALL A PLASTIC PROTECTIVE BUSHING, ON EACH CONDUIT STUB-OUT, TO PREVENT CABLE DAMAGE.
	(floor outlet symbol)	INDICATES THE LOCATION OF A FLOOR MOUNTED TECHNOLOGY OUTLET. ELECTRICAL CONTRACTOR TO PROVIDE AND INSTALL A FLOOR BOX WITH (1) 1" CONDUIT PER EVERY (6) CABLES INSTALLED. ALL CONDUITS SHALL ROUT FROM THE FLOOR BOX, DIRECTLY TO THE IDF SERVING THIS AREA AND STUB-UP IN THE SAME LOCATION AS THE BUILDING SERVICE CONDUITS.
	(ceiling outlet symbol)	INDICATES THE LOCATION OF A CEILING MOUNTED OUTLET. CONTRACTOR SHALL MOUNT THIS OUTLET AT +12" ABOVE THE CEILING AND COORDINATE ALL FINAL LOCATIONS WITH OTHER TRADES ON THE PROJECT TO VERIFY THAT THE LOCATION OF THE OUTLET MAINTAINS 12" OF CLEARANCE FROM THE FRONT OF THE FACEPLATE FOR OWNER ACCESS. ELECTRICAL CONTRACTOR SHALL ROUTE (1) 1" CONDUIT FROM THE BUILDING STRUCTURE TO A SINGLE GANG BACK BOX MOUNTED AT 5' OR LESS ABOVE THE FINISHED CEILING. SECURE CONDUIT AND BACK BOX TO INSURE MINIMAL SWAY MOVEMENT.
	'D#'	DESIGNATES THAT THE ASSOCIATED TECHNOLOGY OUTLET IS INTENDED FOR THE USE OF A NETWORK CONNECTION. THE '#' SHALL BE REPLACED WITH NUMERIC TEXT THAT IDENTIFIES THE TOTAL NUMBER OF CATEGORY 6, NETWORK CABLES THAT ARE TO BE INSTALLED AT THE TECHNOLOGY OUTLET LOCATION. CONTRACTOR TO PROVIDE AND INSTALL CATEGORY 6, NETWORK CABLES, CATEGORY 6, CONNECTORS, STAINLESS STEEL FACEPLATES WITH IDENTIFICATION WINDOWS, LABELS, BLANK INSERTS, AND ANY OTHER MATERIALS REQUIRED TO FURNISH A COMPLETELY FUNCTIONAL AND TESTED OUTLET LOCATION. ALL FACEPLATES PROVIDED SHALL CONTAIN A MINIMUM 4-PORTS AND SHALL BE APPROPRIATELY SIZED TO ACCOMMODATE THE NUMBER OF CIRCUITS BEING INSTALLED AT THIS TECHNOLOGY OUTLET LOCATION.
	'W'	DESIGNATES THAT THE ASSOCIATED TECHNOLOGY OUTLET IS INTENDED FOR THE USE OF A WALL MOUNTED TELEPHONE CONNECTION. CONTRACTOR TO PROVIDE AND INSTALL (1) CATEGORY 6, NETWORK CABLE, (1) CATEGORY 6, CONNECTOR, STAINLESS STEEL WALL TELEPHONE FACEPLATE, LABELS, AND ANY OTHER MATERIALS REQUIRED TO FURNISH A COMPLETELY FUNCTIONAL AND TESTED CIRCUIT AT EACH LOCATION SHOWN. CONTRACTOR SHALL MOUNT THIS OUTLET AT +42" AFF AND COORDINATE ALL FINAL LOCATIONS WITH OTHER TRADES ON THE PROJECT TO VERIFY THAT THE LOCATION OF THE OUTLET MAINTAINS 8" OF CLEARANCE ON ALL FOUR SIDES OF THE BACK BOX. OUTLETS SHALL REMAIN CLEAR OF ROOM DOORS, CABINET DOORS, APPLIANCE DOORS, AND SLIDING DRAWERS.
	'AP'	DESIGNATES THAT THE ASSOCIATED TECHNOLOGY OUTLET IS INTENDED FOR THE USE OF A WIRELESS ACCESS POINT CONNECTION. CONTRACTOR TO PROVIDE AND INSTALL (2) CATEGORY 6, NETWORK CABLE, (2) CATEGORY 6, CONNECTOR, STAINLESS STEEL FACEPLATE WITH IDENTIFICATION WINDOWS, LABELS, AND ANY OTHER MATERIALS REQUIRED TO FURNISH A COMPLETELY FUNCTIONAL AND TESTED CIRCUIT AT EACH LOCATION SHOWN. PROVIDE (2) 10' PLENUM PATCH CABLE FOR EACH LOCATION INSTALLED. PATCH CABLE TO BE INSTALLED AND ROUTED BY OWNER.

NOTES TO CONTRACTOR

1. EVERY SYMBOL SHOWN ON LEGEND MAY NOT APPEAR ON DRAWINGS. REFER TO GENERAL ELECTRICAL NOTES FOR WALL-MOUNTED DEVICE MOUNTING HEIGHTS.
2. REFERENCE SPECIFICATIONS FOR MATERIALS AND METHODS.
3. COMPLETE INSTALLATION OF ALL PRODUCTS SHALL BE IN COMPLIANCE WITH ALL CODES, INDUSTRY STANDARDS, COMMON PRACTICES AND MANUFACTURER'S INSTRUCTIONS.
4. ALL EXTERIOR AND WALL MOUNTED CAMERA LOCATIONS AND MOUNTING HEIGHTS MUST BE COORDINATED WITH THE OWNER PRIOR TO ROUGH-IN. COORDINATION MEETINGS SHALL BE SCHEDULED THROUGH THE ARCHITECT'S PROJECT MANAGER.

ACCESS CONTROL LEGEND

GROUP	SYMBOL	DESCRIPTION
DEVICES	CR (wall)	WALL OR MULLION MOUNTED ACCESS CONTROL PROXIMITY CARD READER.
	CR (circle)	ACCESS CONTROL PROXIMITY CARD READER THAT IS INTEGRATED INTO THE DOOR HARDWARE.
	DR	DOOR RELEASE BUTTON
	PIR	MOTION REQUEST TO EXIT DEVICE
	ACP	DESIGNATES THE LOCATION OF THE ACCESS CONTROL SYSTEM, CONTROL PANEL. ELECTRICAL CONTRACTOR TO PROVIDE 120V. POWER TO PANEL. PROVIDE NETWORK CABLE TO PANEL AND COORDINATE WITH THE OWNER'S TECHNOLOGY DEPARTMENT ON ACQUIRING AN IP ADDRESS.
	DS (wall)	WALL OR MULLION MOUNTED, 2-WAY AUDIO/VIDEO INTERCOM DOOR STATION.
	DS (circle)	DOOR MOUNTED, 2-WAY AUDIO/VIDEO INTERCOM DOOR STATION.
	MS	2-WAY AUDIO/VIDEO INTERCOM MASTER STATION.
	PB	ADA AUTO DOOR OPEN BUTTON. SHOWN FOR REFERENCE ONLY, BUTTON AND AUTO DOOR OPERATOR PROVIDED AND INSTALLED BY THE DOOR SYSTEM INSTALLER.
	DO	AUTO DOOR OPERATOR. OPERATOR TO BE PROVIDED AND INSTALLED BY THE DOOR SYSTEM INSTALLER.

NOTES:

1. REFERENCE ACCESS CONTROL SCHEDULE, DIVISION 8 AND DIVISION 28 SPECIFICATIONS FOR ADDITIONAL INFORMATION AND REQUIREMENTS

GENERAL NOTES

1. ALL 120V POWER REQUIRED FOR THE FUNCTIONALITY OF EACH SYSTEM SHALL BE A DEDICATED CIRCUIT AND ON EMERGENCY POWER WHEN AVAILABLE. PROJECTS ELECTRICAL CONTRACTOR SHALL BE RESPONSIBLE FOR ALL POWER TO MAIN CONTROL PANELS, REMOTE POWER SUPPLIES AND ALL HEAD END EQUIPMENT. SYSTEM INSTALLERS SHALL COORDINATE LOCATIONS AND CONNECTIONS WITH THE PROJECT'S ELECTRICAL CONTRACTOR.
2. THE PROJECT'S ELECTRICAL CONTRACTOR SHALL BE RESPONSIBLE FOR ALL IN CONDUITS, BACK BOXES, JUNCTION BOXES, RACEWAYS, AND SLEEVES REQUIRED TO ESTABLISH CLEAR PATHWAYS FOR ALL SYSTEMS. ALL CONDUITS, SLEEVES, BOXES, AND RACEWAYS SHALL BE PROPERLY SIZED TO MAINTAIN A 40% MAXIMUM FILL RATIO.
3. ALL EXPOSED SYSTEM'S WIRING OR WIRING ROUTING ACROSS NON ACCESSIBLE CEILINGS SHALL BE ROUTED IN CONDUIT, PROVIDED AND INSTALLED BY THE PROJECT'S ELECTRICAL CONTRACTOR. SIZE CONDUIT AS REQUIRED TO ROUTE SYSTEMS WITH 40% CABLE FILL RATIO. MINIMUM CONDUIT SIZE SHALL BE 3/4".
4. EACH SYSTEM INSTALLER SHALL BE RESPONSIBLE FOR ENSURING ALL EXTERIOR WALL PENETRATIONS ARE PROPERLY SEALED TO PREVENT ANY MOISTURE FROM ENTERING BUILDING.
5. NO CONDUITS SHALL BE INSTALLED ON THE EXTERIOR OF THE BUILDING. IF EXTERIOR CONDUITS ARE REQUIRED FOR A COMPLETE INSTALLATION, EACH SYSTEM CONTRACTOR SHALL COORDINATE WITH THE PROJECTS CONSULTANT PRIOR TO ANY ROUGH-IN.
6. EACH SYSTEM INSTALLER SHALL PROVIDE AND INSTALL PROTECTIVE BUSHINGS ON ALL CONDUIT STUB OUTS AND SLEEVES TO PREVENT CABLE DAMAGE. BUSHING TO BE INSTALLED PRIOR TO CABLE INSTALLATION. CUTTING BUSHING AND INSTALLING AFTER CABLE IS INSTALLED WILL NOT BE EXCEPTED.
7. ALL CABLE SHALL BE ROUTED DOWN CORRIDORS, PARALLEL AND PERPENDICULAR TO THE BUILDING WALLS AND STRUCTURE. CABLE TO EACH DEVICE SHALL BRANCH OFF OF A MAIN CORRIDOR TRUNK. ROUTING CABLES THROUGH CLASSROOMS, OFFICES, STORAGE ROOMS, RESTROOMS OR ANY TYPE OF ROOM OTHER THAN A CORRIDOR WILL NOT BE ACCEPTED. ENTER ALL ROOMS ABOVE THE ASSOCIATED ROOM DOORWAY.

VIDEO SURVEILLANCE LEGEND

GROUP	SYMBOL	DESCRIPTION
DEVICES	(camera symbol)	INTERIOR VIDEO SURVEILLANCE CAMERA.
	(circled camera symbol)	VANDAL RESISTANT, WEATHER PROOF, EXTERIOR SECURITY CAMERA.
	VRS	VIDEO RECORDING SERVER. REFERENCE SPECIFICATIONS FOR INFORMATION CONCERNING ANALOG OR IP BASED TYPE SYSTEM.

NOTES:

1. REFERENCE ACCESS CONTROL SCHEDULE, DIVISION 8 AND DIVISION 28 SPECIFICATIONS FOR ADDITIONAL INFORMATION AND REQUIREMENTS

AUDIO/VIDEO LEGEND

GROUP	SYMBOL	DESCRIPTION
DEVICES	'#MP'	INDICATES THE LOCATION OF A VIDEO PROJECTOR # TO BE REPLACED WITH "C" OR "W". "C" INDICATES THAT THE DEVICE IS A CEILING MOUNTED DEVICE AND "W" INDICATES IT IS TO BE WALL MOUNTED. CONTRACTOR TO PROVIDE AND INSTALL A PROJECTOR, WIRELESS GATEWAY, CEILING OR WALL MOUNTING KIT, AND HDMI PATCH CABLE FROM THE WIRELESS GATEWAY TO THE PROJECTOR INPUT
	'AVI-*#'	INDICATES THAT THE DESIGNATED TECHNOLOGY OUTLET IS INTENDED FOR AN AUDIO/VIDEO (A/V) INPUT. CONTRACTOR TO PROVIDE AND INSTALL A FLOOR MOUNTED OR WALL MOUTED BOX AS INDICATED. PROVIDE POVIDE 2-GANG 3 -1/2" DEEP BACKBOX AND (2) 1.25" CONDUITS FROM THE BOX TO THE NEAREST PLENUM ACCESSIBLE CEILING WITHIN THE SAME ROOM. *# - INDICATE TYPE OF AV INPUT. REFER TO SPEC AND DETAILS SHEETS FOR MORE INFORMATION
	'LCD-*#'	EACH LCD OUTLET SHALL BE A 2-GANG BOX AND TWO (2) 1.25" CONDUITS STUBBING INTO THE ROOMS ACCESSIBLE CEILING. PROVIDE ONE DOUBLE-GANG FACEPLATE WITH TWO (2) DECORA PORTS. PROVIDE A DECORA STYLE INSERT THAT ACCEPTS THE STYLE OF DATA JACK BEING USED FOR STRUCTURED CABLING. PROVIDE ONE(1) CAT6 CABLE AND ONE (1) RG6 COAX. WHEN THERE IS A LOCAL A/V INPUT ASSOCIATED WITH THE DISPLAY, PROVIDE A DECORA INSERT THAT CONFORMS WITH THE SYSTEMS SPECIFIED. OTHERWISE PROVIDE A BLANK INSERT IN THE SECOND PORT
	(S)	PROVIDE AND INSTALL PAGING SPEAKER AT THIS LOCATION TO PROVIDE SOUND DISTRIBUTION

NOTES:

*# - UNLESS SPECIFICALLY NOTED OTHERWISE, THE FOLLOWING SHALL APPLY TO EACH DEVICE SHOWN ON THE ENTIRE PROJECT:

- * SHALL BE REPLACED WITH ALPHABETICAL CHARACTERS THAT SHALL INDICATE THE SPECIFIC VENUE THAT THE DEVICE IS ASSOCIATED WITH.
- # SHALL BE REPLACED WITH A NUMERIC VALUE THAT SHALL IDENTIFY THE SPECIFIC DEVICE WITHIN THE SPECIFIC VENUE.

REFERENCE THE PROJECT SPECIFICATIONS.

THE AUDIO/VIDEO SYSTEM INTEGRATOR SHALL COORDINATE ALL BOX AND CONDUIT SIZE REQUIREMENTS PRIOR TO ROOUGH-IN BY THE PROJECTS ELECTRICAL CONTRACTOR.

SECURITY GENERAL NOTES

1. THE SECURITY CAMERA SYSTEM INSTALLER SHALL BE RESPONSIBLE FOR CONNECTING ALL APPLICABLE SYSTEM EQUIPMENT TO THE OWNER'S NETWORK.
2. THE SYSTEM INSTALLER SHALL PROPERLY SUPPORT ALL INSTALLED SYSTEM CABLING FROM AN APPROVED CABLE SUPPORT SYSTEM AS DETAILED IN SPECIFICATIONS. NO CABLING SHALL BE ROUTED AND TIED DIRECTLY TO BUILDING STEEL, CEILING GRID SUPPORT, CONDUIT, PIPING, OR DUCTWORK. THE CABLE SUPPORT SYSTEM SHALL BE DIRECTLY CONNECTED TO THE BUILDING'S STEEL JOIST. AT LOCATIONS WHERE THE BOTTOM OF THE JOIST IS MORE THAN 5' ABOVE THE CEILING, THE SYSTEM INSTALLER SHALL PROVIDE AND INSTALL THREADED ROD AND ALL REQUIRED MATERIALS TO CONNECT THE THREADED ROD TO THE BUILDING STEEL AND THE CABLE SUPPORT SYSTEM TO THE THREADED ROD. CABLE PATHWAY SHALL NOT BE HIGHER THAN 5' ABOVE THE CEILING AT ANY LOCATIONS.
3. SECURITY CAMERA SYSTEM INSTALLER SHALL PROVIDE A CEILING MOUNTED INSTALLATION KIT RECOMMENDED BY THE MANUFACTURER OF THE CAMERA. EACH CEILING MOUNTED CAMERA KIT SHALL HAVE A SUPPORT WIRE ATTACHED TO THE STRUCTURE TO PREVENT THE CAMERA FROM DROPPING TO THE FLOOR AT ANY TIME. AT NO POINT SHALL THE WEIGHT OF THE CEILING MOUNTED SECURITY CAMERA BE SUPPORTED BY THE CEILING GRID SYSTEM OR CEILING TILES. ALL CEILING MOUNTED CAMERAS SHALL BE FLUSH MOUNTED.
4. ALL EXTERIOR AND WALL MOUNTED CAMERA LOCATIONS AND MOUNTING HEIGHTS MUST BE COORDINATED WITH THE OWNER PRIOR TO ROUGH-IN. COORDINATION MEETINGS SHALL BE SCHEDULED THROUGH THE ARCHITECT'S PROJECT MANAGER.
5. PROVIDE AND INSTALL MAGNETIC DOOR CONTACT AT ALL ROOF HATCHES ON THE ENTIRE PROJECT. CONTACTS TO BE CONNECTED TO THE BUILDINGS INTRUSION DETECTION SYSTEM.
6. CONTRACTOR TO PROVIDE AND INSTALL A MONITOR RELAY AND ALL REQUIRED MATERIALS TO CONNECT THE RELAY TO THE FREEZER/COOLER TEMPERATURE GAUGE AND BACK TO THE INTRUSION DETECTION SYSTEM, THE INTRUSION DETECTION SYSTEM SHALL BE PROGRAMMED TO NOTIFY THE OWNER'S DESIGNATED PERSONNEL IN THE EVENT OF EXTENSIVE CHANGE IN TEMPERATURE.

PROFESSIONAL SEAL

REGISTERED COMMUNICATIONS DISTRIBUTION DESIGNER
Bicsi
Weifang Wang
BICSI ID #165482
Expires 12-31-21
RCDD

Martinez Architect, LP
900 Rockmead, Suite 250
Houston, Texas 77339
281.346.7371

DESIGN TEAM

Architectural
Martinez Architects

Civil Engineer
Consultant 1 Name

Structural
Matrix Structural Engineers

MEP
DBR

Landscaping
KDC Associates

FIRE STATION #11
CITY OF MIDLAND
Briarwood Ave & Golden Gate Dr
Midland, TX 79707

PROJECT No: MA 18017
DATE: 07/30/2019

ISSUE Date	Description
22-MAY-2019	100% DESIGN DEVELOPMENT
26-JUN-2019	75% CONSTRUCTION DOCUMENT
30-JUL-2019	100% ISSUE FOR PERMIT
16-JAN-2020	100% ISSUE FOR APPROVAL TO BID

DBR
9601 McAllister Freeway, Suite 410
San Antonio, Texas 78216
210.546.0200 v 210.546.0201 f
TBPE Firm Registration NO. 2234

DBR Project Number 196024.000

JC | BV | CL | WJ | MC

TECHNOLOGY & SECURITY SYMBOLS LEGEND

TS001

4.1468

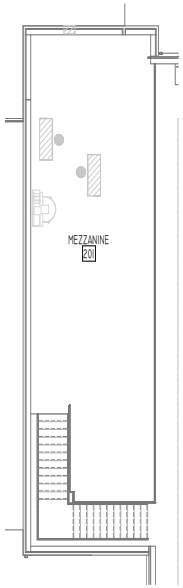

2 MEZZANINE LOW VOLTAGE PLAN
TS201 1/8" = 1'-0"

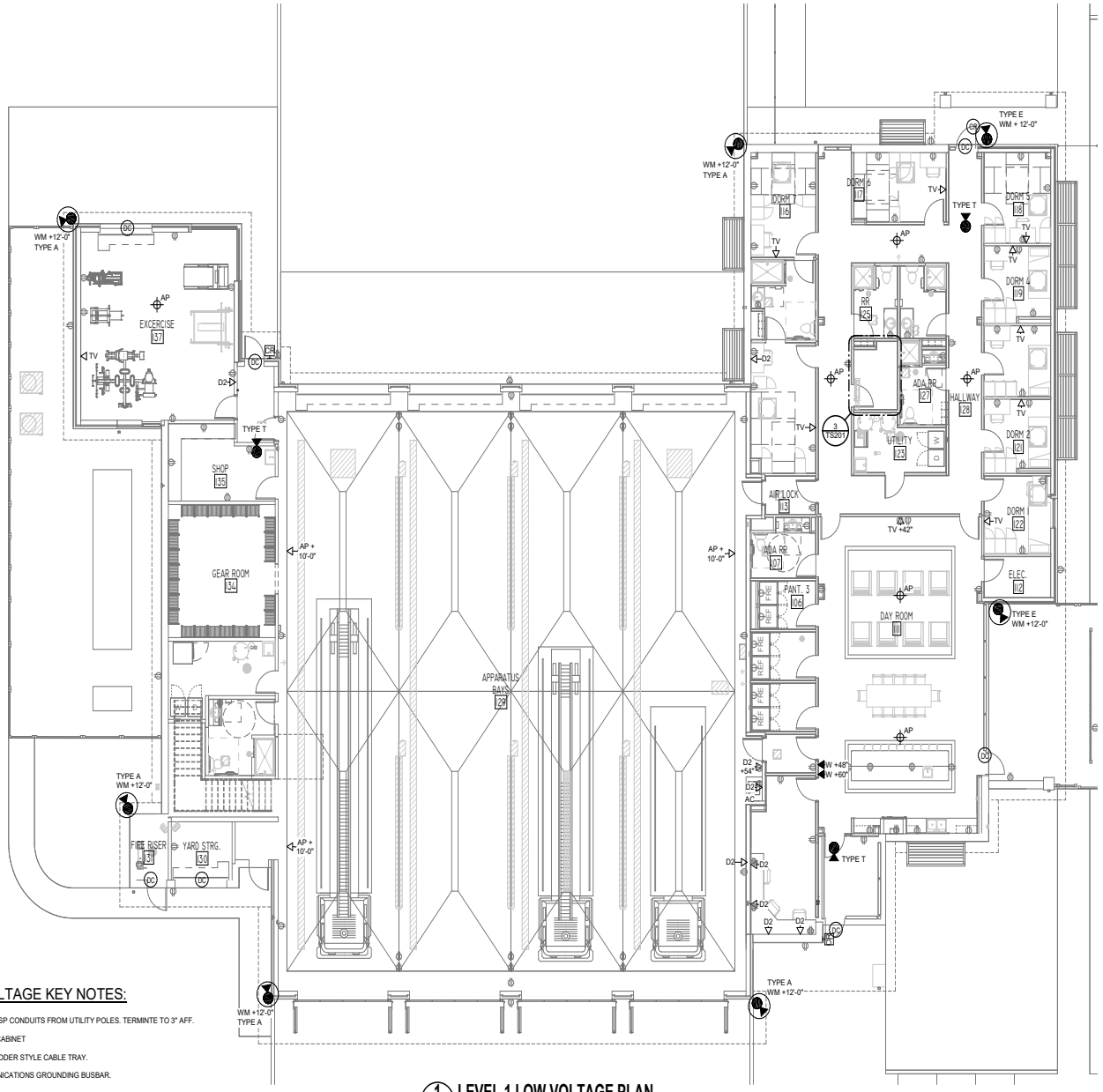

1 LEVEL 1 LOW VOLTAGE PLAN
TS201 1/8" = 1'-0"

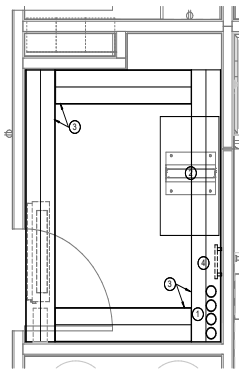

3 MDF LAYOUT
TS201 1/2" = 1'-0"

LOW VOLTAGE KEY NOTES:

1. FOUR (3) 4" OSP CONDUITS FROM UTILITY POLES. TERMINTE TO 3" AFF.
2. EQUIPMENT CABINET
3. 12"W x 4"D LADDER STYLE CABLE TRAY.
4. TELECOMMUNICATIONS GROUNDING BUSBAR.

TRUE NORTH | PROJECT NORTH

DBR
9601 McAllister Freeway, Suite 410
San Antonio, Texas 78216
210.546.0200 v 210.546.0201 f
TBPE Firm Registration No. 2234

DBR Project Number 196024.000

JC | BV | CL | WJ | MC

PROFESSIONAL SEAL

NOT FOR CONSTRUCTION OR PERMITTING; PRINTED FOR REVIEW ONLY
01/14/2020
WEIFANG WANG, BICSI
BICSI ID #165402

martinez ARCHITECTS
Martinez Architect, LP
900 Rockmead, Suite 250
Houston, Texas 77339
281.346.7371

DESIGN TEAM

Architectural
Martinez Architects

Civil Engineer
Maverick Engineering

Structural
Matrix Structural engineers

MIE/P/T
DBR

Landscape Architect
KDC Associates

Consultant 5 Discipline Type
Consultant 5 Name

FIRE STATION #11
CITY OF MIDLAND
6600 BRIARWOOD AVE
MIDLAND, TX 79707

PROJECT No: MA 18017
DATE: 01/14/2020

ISSUE	Date	Description
100% DESIGN DEVELOPMENT	22-MAY-2019	
75% CONSTRUCTION DOCUMENT	26-JUN-2019	
100% ISSUE FOR PERMIT	30-JUL-2019	
100% ISSUE FOR APPROVAL TO BID	16-JAN-2020	

LEVEL 1 & MEZZANINE LOW VOLTAGE PLAN

TS201

4.1469

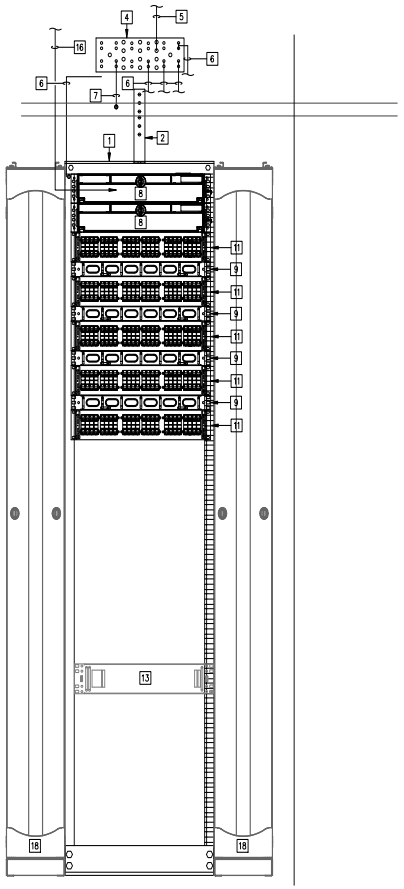

1 TTS401 **RACK ELEVATIONS**
NOT TO SCALE

MDF/IDF RISER DETAIL KEYED NOTES

1. NOT USED.
2. 4-POST RACK
3. 12' WIDE LADDER TRAY.
4. PROVIDE AND INSTALL A 12"X4" WALL MOUNTED, TELECOMMUNICATIONS GROUND BUS BAR (TGBB) AT INDICATED.
5. PROVIDE AND INSTALL A #1/0 STRANDED COPPER GROUND WIRE FROM THE TGBB TO THE BUILDING'S MAIN ENTRANCE GROUND. CONNECTION AT BOTH ENDS SHALL BE MADE UTILIZING A 2-HOLE COMPRESSION LUG. SCREW TYPE BLOCKS WILL NOT BE ACCEPTED.
6. PROVIDE AND INSTALL A #6AWG, STRANDED COPPER GROUND WIRE FROM THE TGBB TO THE COMMUNICATION RACK OR CABINET. CONNECTION AT BOTH ENDS SHALL BE MADE UTILIZING A 2-HOLE, #6AWG GROUND COMPRESSION LUG. SCREW TYPE BLOCKS WILL NOT BE ACCEPTED.
7. PROVIDE AND INSTALL A #6AWG, STRANDED COPPER GROUND WIRE FROM THE TGBB TO THE LADDER TRAY SYSTEM. CONNECTION AT BOTH ENDS SHALL BE MADE UTILIZING A 2-HOLE, #6AWG GROUND COMPRESSION LUG. SCREW TYPE BLOCKS WILL NOT BE ACCEPTED.
8. TWO R.U. FIBER ENCLOSURE BY OTHERS TO HOUSE INCOMING WAN SERVICE. COORDINATE WITH SERVICE PROVIDER FOR INSTALLATION AND PLACEMENT OF ENCLOSURE WITHIN RACK
9. CONTRACTOR FURNISHED, CONTRACTOR INSTALL HORIZONTAL CABLE MANAGER.
10. PROVIDE AND INSTALL A 24-PORT, PATCH PANEL WITH ALL REQUIRED MOUNTING HARDWARE AND TERMINATION COMPONENTS, FOR THE TERMINATION OF A MDF-TO-IDF MULTI-PAIR TIE CABLE. TERMINATE 1-PAIR PER PORT ON PINS 4 AND 5.
11. PROVIDE AND INSTALL A 48-PORT, PATCH PANEL WITH ALL REQUIRED MOUNTING HARDWARE AND TERMINATION COMPONENTS, FOR THE TERMINATION OF ALL IP TELEPHONE, LAN OUTLET, AND WIRELESS CATEGORY 6 CABLING ORIGINATING IN THIS COMMUNICATIONS CLOSET. PANELS SHOWN ARE ESTIMATED. CONTRACTOR TO PROVIDE THE REQUIRED AMOUNT TO TERMINATE 125% OF THE TOTAL NUMBER OF CABLES IN EACH TELECOMMUNICATION ROOM. ALL TERMINATIONS SHALL COMPLY WITH THE 568B PIN-OUT CONFIGURATION.
12. PROVIDE AND INSTALL A 48-PORT, PATCH PANEL WITH ALL REQUIRED MOUNTING HARDWARE AND TERMINATION COMPONENTS, FOR THE TERMINATION OF ALL IP INTERCOM SPEAKER CATEGORY 6 CABLING ORIGINATING IN THIS COMMUNICATIONS CLOSET. PANELS SHOWN ARE ESTIMATED. CONTRACTOR TO PROVIDE THE REQUIRED AMOUNT TO TERMINATE 125% OF THE TOTAL NUMBER OF CABLES IN EACH TELECOMMUNICATION ROOM. ALL TERMINATIONS SHALL COMPLY WITH THE 568B PIN-OUT CONFIGURATION.
13. OWNER PROVIDED AND INSTALLED RACK MOUNTED UPS.
14. PROVIDE 24 PORT PATCH PANEL FOR DEMARC MULTI-PAIR CABLING EXTENSION. TERMINATE CABLE ON PINS 4 AND 5 OF INDICATED PATCH PANEL
15. CONTRACTOR SHALL EXTEND TELEPHONE DEMARC CABLING IN TO MDF. PROVIDE 25 PAIR TIE CABLE BETWEEN MPOE AND DEMARC PATCH PANEL
16. INDICATES INCOMING SERVICE PROVIDED BY OTHERS.
17. FREE-STANDING 4-POST, 7', FLOOR MOUNTED NETWORK RACK
18. VERTICAL CABLE MANAGER

DBR
9601 McAllister Freeway, Suite 410
San Antonio, Texas 78216
210.546.0200 v 210.546.0201 f
TBPE Firm Registration NO. 2234

DBR Project Number 196024.000

JC	BV	CL	WJ	MC

PROFESSIONAL SEAL

martinez ARCHITECTS
Martinez Architect, LP
900 Rockmead, Suite 250
Houston, Texas 77339
281.346.7371

DESIGN TEAM

Architectural
Martinez Architects

Civil Engineer
Consultant 1 Name

Structural
Matrix Structural Engineers

MEP
DBR

Landscaping
KDC Associates

FIRE STATION #11

CITY OF MIDLAND

Briarwood Ave & Golden Gate Dr
Midland, TX 79707

PROJECT No: MA 18017
DATE: 07/30/2019

ISSUE	Date	Description
100% DESIGN DEVELOPMENT	22-MAY-2019	
75% CONSTRUCTION DOCUMENT	26-JUN-2019	
100% ISSUE FOR PERMIT	30-JUL-2019	
100% ISSUE FOR APPROVAL TO BID	16-JAN-2020	

TECHNOLOGY & SECURITY DETAILS

TS401

4.1470

01 NOT USED NOT TO SCALE

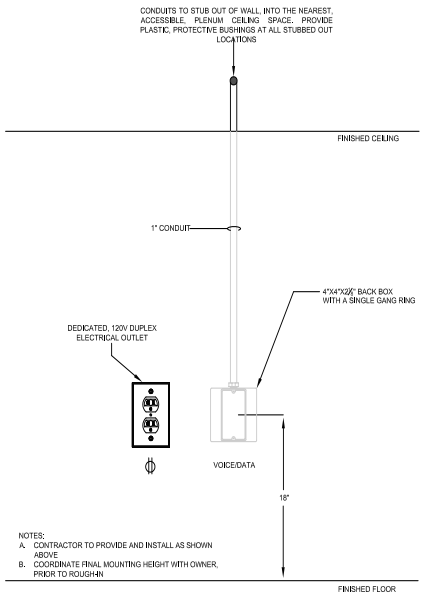

02 TYPICAL VOICE/DATA OUTLET NOT TO SCALE

03 NOT USED NOT TO SCALE

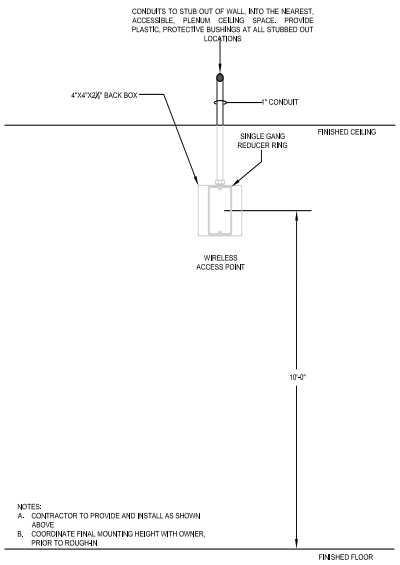

04 WALL MOUNTED WIRELESS AP NOT TO SCALE

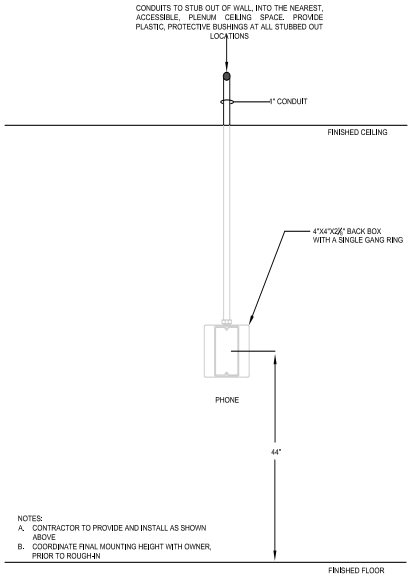

05 WALL MOUNTED TELEPHONE NOT TO SCALE

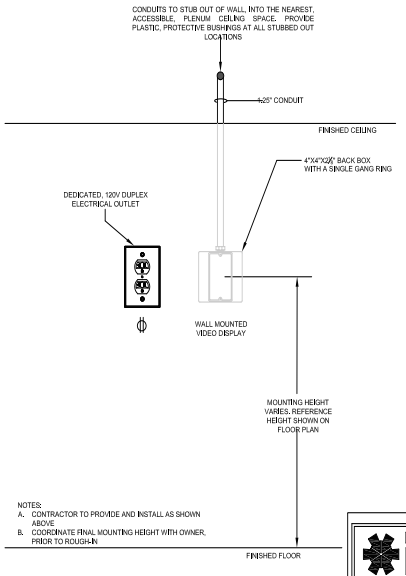

06 WALL MOUNTED TV DISPLAY NOT TO SCALE

DBR
9601 McAllister Freeway, Suite 410
San Antonio, Texas 78216
210.546.0200 v 210.546.0201 f
TBPE Firm Registration NO. 2234

DBR Project Number 196024.000

JC	BV	CL	WJ	MC

PROFESSIONAL SEAL

Bicsi
Weifeng Wang
BICSI ID # 1654482
Expiration Date
RCDD

martinez ARCHITECTS
Martinez Architect, LP
900 Rockmead, Suite 250
Houston, Texas 77339
281.346.7371

DESIGN TEAM

Architectural
Martinez Architects

Civil Engineer
Consultant 1 Name

Structural
Matrix Structural Engineers

MEP
DBR

Landscaping
KDC Associates

FIRE STATION #11

CITY OF MIDLAND
Briarwood Ave & Golden Gate Dr
Midland, TX 79707

PROJECT No: MA 18017
DATE: 07/30/2019

ISSUE	Date	Description
100% DESIGN DEVELOPMENT	22-MAY-2019	
75% CONSTRUCTION DOCUMENT	26-JUN-2019	
100% ISSUE FOR PERMIT	30-JUL-2019	
100% ISSUE FOR APPROVAL TO BID	16-JAN-2020	

TECHNOLOGY & SECURITY DETAILS

TS501

4.1471

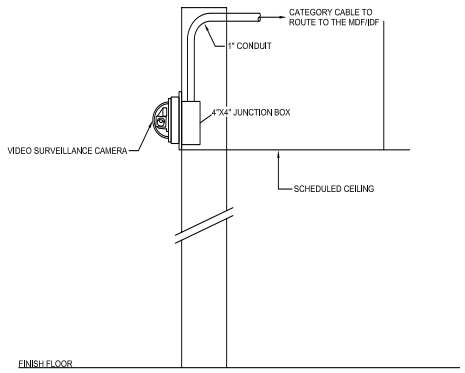

01 INTERIOR WALL MOUNTED DOME CAMERA - VERTICAL MOUNT SCALE: N.T.S.

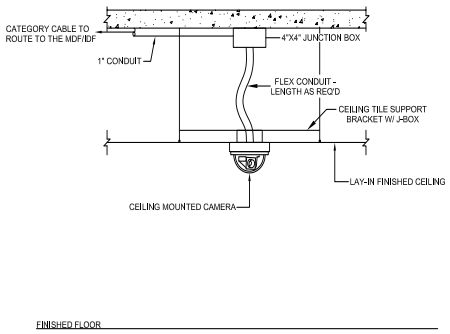

02 INTERIOR CEILING MOUNTED DOME CAMERA W/FLEX SCALE: N.T.S.

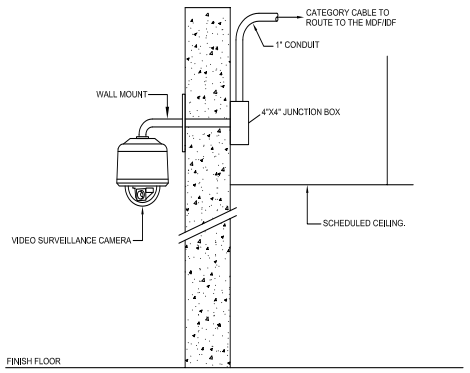

03 EXTERIOR WALL MOUNTED DOME CAMERA SCALE: N.T.S.

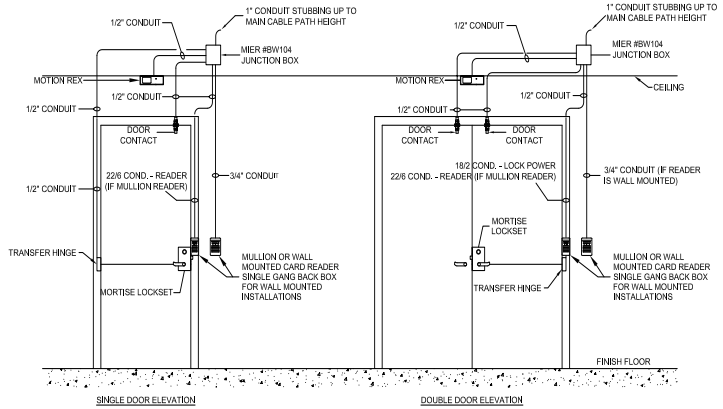

04 ACCESS CONTROL - ELECTRIFIED MORTISE LOCK DOOR ELEVATION SCALE: N.T.S.

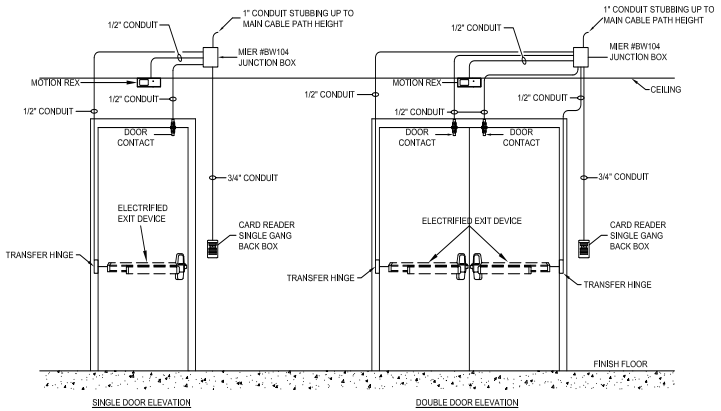

05 ACCESS CONTROL - ELECTRIFIED EXIT DEVICE DOOR ELEVATION SCALE: N.T.S.

DBR
9601 McAllister Freeway, Suite 410
San Antonio, Texas 78216
210.546.0200 v 210.546.0201 f
TBPE Firm Registration NO. 2234

DBR Project Number 196024.000

JC	BV	CL	WJ	MC

PROFESSIONAL SEAL

martinez ARCHITECTS
Martinez Architect, LP
900 Rockmead, Suite 250
Houston, Texas 77339
281.346.7371

DESIGN TEAM

Architectural
Martinez Architects

Civil Engineer
Consultant 1 Name

Structural
Matrix Structural Engineers

MEP
DBR

Landscaping
KDC Associates

FIRE STATION #11

CITY OF MIDLAND

Briarwood Ave & Golden Gate Dr
Midland, TX 79707

PROJECT No: MA 18017
DATE: 07/30/2019

ISSUE	Date	Description
100% DESIGN DEVELOPMENT	22-MAY-2019	
75% CONSTRUCTION DOCUMENT	26-JUN-2019	
100% ISSUE FOR PERMIT	30-JUL-2019	
100% ISSUE FOR APPROVAL TO BID	16-JAN-2020	

TECHNOLOGY & SECURITY DETAILS

TS502

4.1472

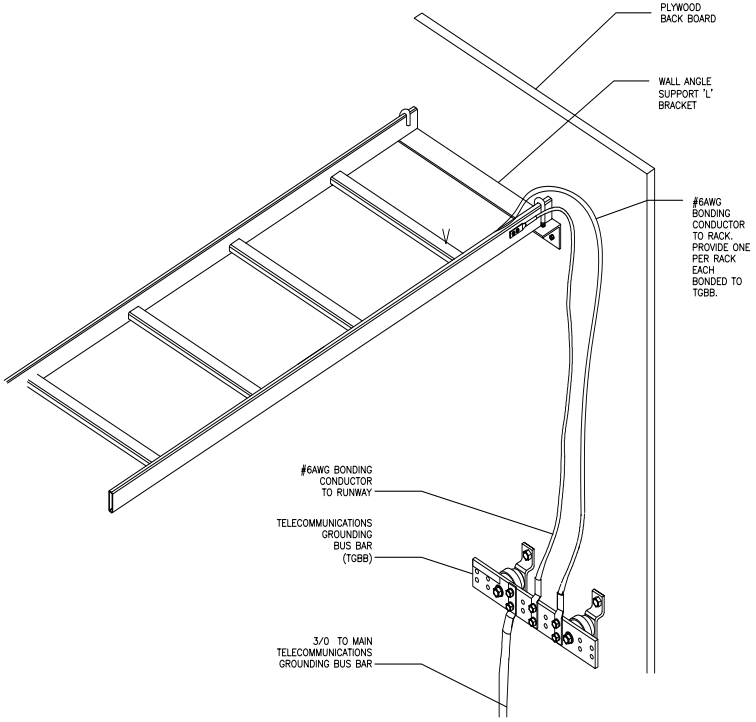

03 CABLE RUNWAY - - GROUNDING AND BONDING NOT TO SCALE

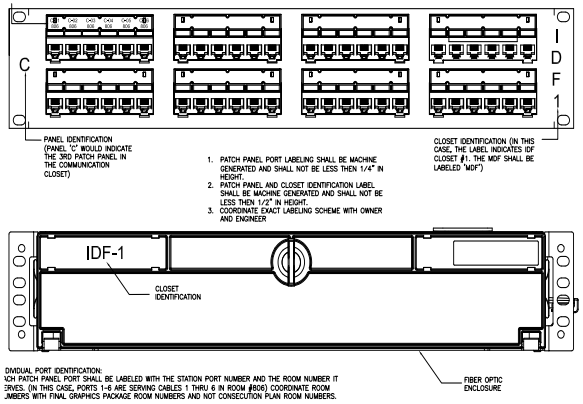

02 FIBER ENCLOSURE/ COPPER PATCH PANEL LABELING DETAIL NOT TO SCALE

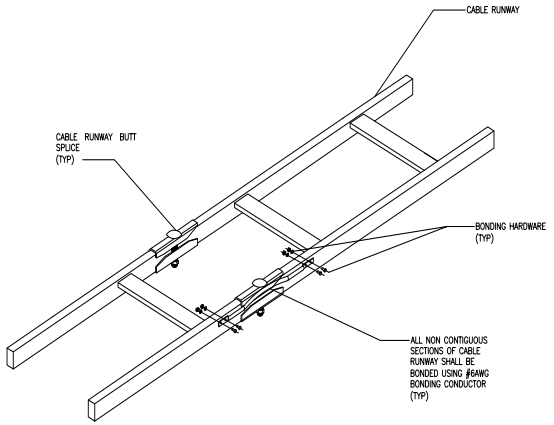

04 CABLE RUNWAY - BONDING AND BUTT SPLICE NOT TO SCALE

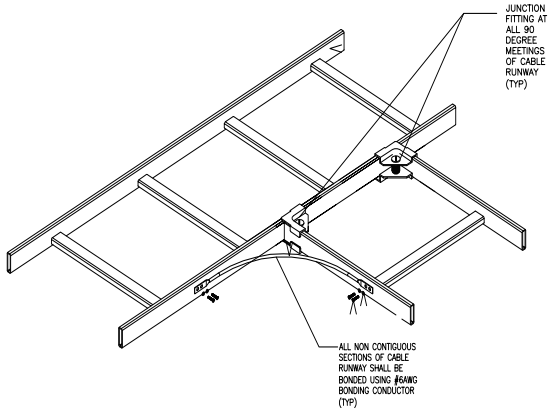

06 CABLE RUNWAY - JUNCTION AND BONDING NOT TO SCALE

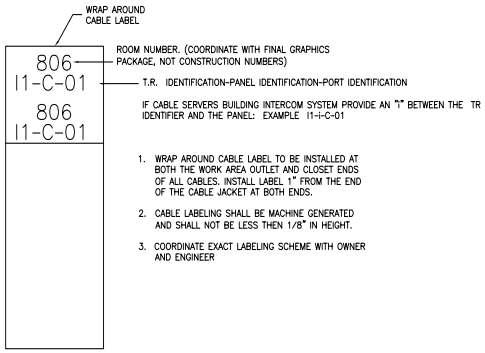

07 CABLE LABEL DETAIL NOT TO SCALE

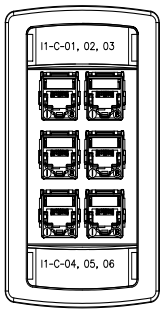

1. FACEPLATE LABELING SHALL BE MACHINE GENERATED AND SHALL NOT BE LESS THEN 1/4" IN HEIGHT.
2. PROVIDE BLANK INSERTS FOR ANY UNUSED PORTS
3. COORDINATE EXACT LABELING SCHEME WITH OWNER AND ENGINEER.

08 FACEPLATE LABEL DETAIL NOT TO SCALE

DBR
9601 McAllister Freeway, Suite 410
San Antonio, Texas 78216
210.546.0200 v 210.546.0201 f
TBPE Firm Registration NO. 2234

DBR Project Number 196024.000

JC	BV	CL	WJ	MC

PROFESSIONAL SEAL

martinez ARCHITECTS
Martinez Architect, LP
900 Rockmead, Suite 250
Houston, Texas 77339
281.346.7371

DESIGN TEAM

Architectural
Martinez Architects

Civil Engineer
Consultant 1 Name

Structural
Matrix Structural Engineers

MEP
DBR

Landscaping
KDC Associates

FIRE STATION #11

CITY OF MIDLAND

Briarwood Ave & Golden Gate Dr
Midland, TX 79707

PROJECT No: MA 18017
DATE: 07/30/2019

ISSUE	Date	Description
100% DESIGN DEVELOPMENT	22-MAY-2019	
75% CONSTRUCTION DOCUMENT	26-JUN-2019	
100% ISSUE FOR PERMIT	30-JUL-2019	
100% ISSUE FOR APPROVAL TO BID	16-JAN-2020	

TECHNOLOGY & SECURITY DETAILS

TS503

4.1473

01 CAMERA SCHEDULE

QTY	CAMERA TYPE	ENVIRONMENT	MOUNTING TYPE	SENSORS	VIEW ANGLE	CAMERA MANUFACTURER	CAMERA MODEL	MOUNTING ACCESSORIES	LENS	FRAME RATE	CODEC	RESOLUTION	% MOTION	DAYS OF RETENTION
5	A	EXTERIOR	CORNER MOUNT	4-SENSOR / MULTI DIRECTIONAL	270									
3	B	EXTERIOR	WALL MOUNT	4-SENSOR / MULTI DIRECTIONAL	180									
1	C	EXTERIOR	UNDER CANOPY MOUNT	4-SENSOR / MULTI DIRECTIONAL	360									
	D	EXTERIOR	CORNER MOUNT	1-SENSOR	120									
3	E	EXTERIOR	WALL MOUNT	1-SENSOR	120									
	F	EXTERIOR	UNDER CANOPY MOUNT	1-SENSOR	120									
	G	EXTERIOR	NOT USED	NOT USED										
	H	EXTERIOR	NOT USED	NOT USED										
	J	INTERIOR	NOT USED	NOT USED										
	K	INTERIOR	CORNER MOUNT	4-SENSOR / MULTI DIRECTIONAL	270									
	L	INTERIOR	WALL MOUNT	4-SENSOR / MULTI DIRECTIONAL	180									
	M	INTERIOR	CEILING MOUNT	4-SENSOR / MULTI DIRECTIONAL	360									
	N	INTERIOR	CORNER MOUNT	2-SENSOR / MULTI DIRECTIONAL	180									
	P	INTERIOR	WALL MOUNT	2-SENSOR / MULTI DIRECTIONAL	180									
	Q	INTERIOR	CEILING MOUNT	2-SENSOR / MULTI DIRECTIONAL	180									
	R	INTERIOR	CORNER MOUNT	1-SENSOR	120									
	S	INTERIOR	WALL MOUNT	1-SENSOR	120									
3	T	INTERIOR	CEILING MOUNT	1-SENSOR	120									

DBR
9601 McAllister Freeway, Suite 410
San Antonio, Texas 78216
210.546.0200 v 210.546.0201 f
TBPE Firm Registration NO. 2234

DBR Project Number 196024.000

JC	BV	CL	WJ	MC

PROFESSIONAL SEAL

martinez ARCHITECTS
Martinez Architect, LP
900 Rockmead, Suite 250
Houston, Texas 77339
281.346.7371

DESIGN TEAM

Architectural
Martinez Architects

Civil Engineer
Consultant 1 Name

Structural
Matrix Structural Engineers

MEP
DBR

Landscaping
KDC Associates

FIRE STATION #11

CITY OF MIDLAND

Briarwood Ave & Golden Gate Dr
Midland, TX 79707

PROJECT No: MA 18017
DATE: 07/30/2019

ISSUE	Date	Description
100% DESIGN DEVELOPMENT	22-MAY-2019	
75% CONSTRUCTION DOCUMENT	26-JUN-2019	
100% ISSUE FOR PERMIT	30-JUL-2019	
100% ISSUE FOR APPROVAL TO BID	16-JAN-2020	

TECHNOLOGY & SECURITY SCHEDULES

TS601

4.1474

February 14, 2020

Addendum No. 01

Project: Fire Stations 5 & 11

Owner: City of Midland

Architect: Martinez Architects, LP
Project Number: MA 18017

martinez
ARCHITECTS

This Addendum forms a part of the Contract Documents and modifies the original Bidding Documents and/or prior Addenda as noted below. All conditions, requirements, materials and workmanship shall be satisfied as described in the Contract Documents unless specifically stated otherwise. This Addendum consists of changes to the contract documents, specifications, and drawings as listed and described below.

Clarifications / For Information Only:

1. There will not be a Pre-Bid Conference
2. Liquidated Damages as stated will apply to the overall project, not to each Fire Station individually.
3. Construction Schedule of both Fire Stations is assumed to occur concurrently after Award of Contract and Notice to Proceed.
4. Plans have been submitted to the City for Plan Review. Fire Station 5 is approved. Fire Station 11 is pending approval.
5. The Contractor shall include Builders Risk Insurance in its Bid per the Bidding Requirements.
6. The “Furnished By” and “Installed By” fields in the Equipment Schedule on Sheet A906 (both stations) have been updated in this addendum. Items denoted as Furnished By “Owner”, such as the Gear Extractor for example, will only be specified in the Contract Documents for reference of required infrastructure. Suppliers wishing to have their product considered for Owner-furnished items should contact the City of Midland Fire Chief.
7. Detail 9/S604 “Light Gauge Overbuild” applies to the Roof Crickets shown on the Roof Plan, A301 (Station 11).
8. Exterior (outward) opening door drawing for specified Four Fold doors is provided as an attachment with this Addendum for reference.
9. Preliminary Elevator drawings from manufacturer area provided as an attachment with this Addendum for reference.
10. Spray-applied water repellant coating to masonry veneer not required.
11. Both 7.1 and 7.2 of the Geotechnical Report apply to the project:
    a. 7.1 applies to soil under site pavement areas
    b. 7.2 applies to soil under the building foundation
12. The crushed limestone aggregate base specified in the Geotechnical Report is required per the recommendation.

Revisions to Bidding Requirements:

1. The City shall waive Impact Fees, Tap Fees, and Building Permit Fees for the overall project.
    a. Sub-contractors shall still be responsible for Trade-Specific Permit Fees.

2. For the Allowances defined in Section 01 21 00 bidding Contactors shall divide the total allowance costs for the project in half and include 50% of the total in the bid amount for Fire Station 5, and 50% in the bid amount for Fire Station 11 on the Bid Form.

3. **REVISE** Item A. under Proposal Form Part B, 3.03 List of Unit Prices from “ADDITIONAL SELECT FILL” to “ADDITIONAL AGGREGATE BASE”

Revisions to Specifications:

1. Section 01 22 00 – Unit Prices
   - **REVISE** Item A. under 3.03 List of Unit Prices from "ADDITIONAL SELECT FILL" to "ADDITIONAL AGGREGATE BASE"
   - **REMOVE** Items 'B' and 'C' under 3.03 List of Unit Prices

2. Section 01 57 19 – Control of Ground & Surface Water
   - **REMOVE** Specification Section in its entirety
     - The extent of this scope that applies to this project is covered in Section 31 23 33.

3. Section 02 55 00 – Remediation Soil Stabilization
   - **REMOVE** Specification Section in its entirety
     - This requirement does not apply to the project.

4. Section 04 20 00 – Unit Masonry
   - **ADD** "Featherlite" as acceptable manufacturer of CMU under Paragraph 2.01, A. 2, 7.
   - **REMOVE** Paragraph 2.01, C. "Calcium Silicate Masonry Units" in its entirety.
     - This material does not apply to the project.
   - **ADD** "Core Foam Masonry Foam Insulation (CFMFI) by cfiFOAM, Inc.; Knoxville, TN, 800-656-3626" as approved equivalent of Foamed-In Place Block Insulation under Paragraph 2.01, H. 1, b, viii.

5. Section 04 21 00 – Brick Masonry Units
   - **REMOVE** Paragraph 1.04, A. "Continuous Inspection" in its entirety.
     - This requirement does not apply to the project.
   - **ADD** "Acme Brick" as acceptable manufacturer of "Natural Stone" under Paragraph 2.03, A.

6. Section 06 16 00 – Sheathing
   - **ADD** Paragraph 2.05, D, 4: "All Drawing references to "Sheathing" shall be Glass-Mat Gypsum Sheathing U.N.O."

7. Section 06 65 00 – Simulated Wood Products
   - **REMOVE** Specification Section in its entirety
     - This product does not apply to the project.

8. Section 07 42 13 – Metal Wall Panels
   - **REMOVE** Specification Section in its entirety **AND REPLACE** with new Section 07 42 13 for non-insulated, concealed-fastener metal panels.
     - Insulated Metal Wall Panels do not apply to the project.
     - New Section also includes Soffit Panel specification

9. Section 08 33 00 – Overhead Coiling Door
   - **ADD** New Specification Section

10. Section 08 35 13 – Four Fold Doors
    - **REVISE** Paragraphs 1.3 and 2.2 to replace wind load requirement of "20 lbf/sq. ft." with the following:
      - "Design doors for Ultimate Wind Speed per General Notes on Structural Drawings"

11. Section 08 36 00 – Sectional Overhead Door
    - **ADD** additional acceptable manufacturers as follows under Paragraph 2.1, A:
      - Overhead Door of the Permian Basin / San Angelo; 707 South Colorado; Midland, TX 79701; (432) 570-9206; Bob Weidner (bobweidner@sbcglobal.net)
      - Wayne Dalton Commercial Doors; 2501 S. State Hwy. 121 Bus. Ste 200; Lewisville, TX 75067; wayne-dalton.com

12. Section 09 65 00 – Resilient Flooring
    - **ADD** additional acceptable product as follows under Paragraph 2.01, B. Rubber Floor Tile:

- Survivor Sportsfloor by U.S. Rubber, (833-877-8223), www.usrubber.com

13. Section 10 99 00 – Miscellaneous Specialties
    - **REMOVE** Specification Section in its entirety
        - Section 10 26 00 shall govern corner guards.

14. Section 11 30 00 – Residential Appliances
    - **REVISE** Specification to clarify scope of work included, and revise PART 2 – Products. Revised Section attached in its entirety.
15. Section 12 21 00 – Horizontal Louver Blinds
    - **REVISE** Name of Specification from "Horizontal Louver Blinds" to "Window Coverings"
    - **ADD** Information for Blackout Shades to Section – Revised Specification attached.

16. Section 14 24 00 – Machine Room-Less Hydraulic Passenger Elevators
    - **ADD** New Specification Section

17. Section 26 41 13.13 – Lightning Protection System
    - **ADD** Qualified Manufacturer to 1.05: "Robbins Lightning, Inc. – Missouri (660-582-3156)

18. Section 31 36 00 – Wire Mesh Gabion Wall
    - **ADD** New Specification Section

Revisions to Drawings (Both Fire Stations):

1. **A101 – Architectural Site Plan**
    - **REPLACE** Keynote Description for Radio/Communication Tower with the following: "COMMUNICATION TOWER BY OWNER. (WALL PENETRATION, GALVANIZED SLEEVE, AND CONDUIT FROM TOWER TO I.T. ROOM BY CONCTRACTOR)
    - Keynote AS-34 on Fire Station 11 Site Plan
    - Keynote 18 on Fire Station 5 Site Plan

2. **A401 / A402 – Exterior Elevations**
    - **REMOVE** General Exterior Elevation Note "A" and **REPLACE** with: "REFER TO STRUCTURAL DRAWINGS FOR WIND LOAD REQUIREMENTS"
        - Wind Load Certification from Registered Engineer does not apply to the project.
    - **REMOVE** General Exterior Elevation Note "C"
        - The Smoke Test requirement does not apply to the project.
    - **REMOVE** General Exterior Elevation Note "D" and **REPLACE** with: "PROVIDE CONCRETE SPLASHBLOCK AT ALL DOWNSPOUTS"

3. **A500s – Wall Section**
    - **ADD** General Note: "All References to "Sheathing" shall be Glass-Mat Gypsum Sheathing U.N.O.

4. **A901 – Finish Schedule / A903 – Finish Plan**
    - **REPLACE** flooring-type description "Abrasion and Slip Resistant Concrete Floor Finish" with "Polished Concrete (Refer to Specification 03 66 00)"

5. **A906 – Equipment Schedule**
    - **REVISE** Equipment Schedules to clarify what equipment is furnished and installed by the Owner, and what items will be the responsibility of the Contractor. See attached revised sheets.
        - This addendum item revises all references on all other drawing sheets or specifications to match the responsibility assigned to each equipment item on the attached revised Equipment Schedules. If there is any discrepancy of assigned responsibility between Owner & Contractor, the attached revised Schedules govern.

- Vendor-provide drawing of Range Hood attached for Reference.

6. **P501 – Plumbing Schedules**
   - **REMOVE** Description of "RO-1" on Plumbing Fixture Schedule **AND REPLACE** with "RO EQUIPMENT SHALL BE OWNER FURNISHED AND OWNER INSTALLED. CONTRACTOR SHALL PROVIDE PIPING AND ASSOCIATED ACCESSORIES FOR CONNECTIONS TO PLUMBING FIXTURES AND APPLIANCES AS INDICATED ON PLANS."

7. **C221 – Paving Details**
   - **REPLACE** "GRADE 1" with "GRADE 3" at Concrete Paving Details Compacted Base.

Revisions to Drawings (Fire Station 11 only):

1. **C200 – Dimension Plan - Alternate I**
   - **ADD** Note: "Refer to Sheet A202 for dimensions and layout of fuel storage tanks and associated concrete pads and overhead canopies"

2. **C210 – Paving Plan (Includes Base Bid, Alternate I, and Alternate II)**
   - **REMOVE** Option of Asphalt pavement. **All paving shall be concrete.**
     - Paving Note #6 shall read: "INSTALL MEDIUM DUTY CONCRETE PAVEMENT, SEE DETAIL 05 ON SHEET C221"
     - Paving Note #7 shall read: "INSTALL HEAVY DUTY CONCRETE PAVEMENT, SEE DETAIL 06 ON SHEET C221"

3. **A201 – First Floor Plan**
   - **REVISE** Four-Fold Doors at front of Apparatus Bay to show opening outward
   - **REVISE** Fixture Layout of Restroom 127
   - See attached Revised Sheet.

4. **A503 – Wall Sections**
   - **REMOVE** Reference to Sheathing between CMU and Metal Panels at Detail 3/A503.
     - At all CMU & Metal Panel conditions on both fire stations, the attachment track for the Metal Panels shall be attached directly to the CMU; with no sheathing.

5. **A601 – Enlarged Floor Plans**
   - **REVISE** Fixture Layout of Restroom 127; see attached revised sheet.

6. **A602 – Interior Elevations**
   - **REVISE** Fixture Layout of Restroom 127
   - **REVISE** Material callouts as clouded
   - See attached Revised Sheet

7. **A603 – Interior Elevations**
   - **ADD** Wall Finish Legend
   - **REVISE** Material callouts as clouded
   - See attached Revised Sheet

8. **A802 – Details**
   - **ADD** New Sheet
   - Add sheet to Drawing Index on Cover Sheet

9. **A901 – Finish Schedule / A903 – Finish Plan**
   - **REVISE** Floor Finish Schedule on A901
   - **REVISE** Flooring Legend on A903
   - See attached Revised Sheet

Revisions to Drawings (Fire Station 5 only):

1. **C210 – Paving Plan**
    - **REMOVE** Option of Asphalt pavement. **All paving shall be concrete.**
        - Paving Note #5 shall read: "INSTALL MEDIUM DUTY CONCRETE PAVEMENT, SEE DETAIL 05 ON SHEET C221"

Attachments:

1. Specification Sections:
    a. 14 24 00 – Machine Room-Less Hydraulic Passenger Elevators
    b. 07 42 13 – Metal Wall Panels
    c. 08 33 00 – Overhead Coiling Door
    d. 11 30 00 – Residential Appliances
    e. 12 21 00 – Window Coverings
    f. 31 36 00 – Wire Mesh Gabion Wall

2. Drawing sheets:
    a. A201 – First Floor Plan (11)
    b. A601 – Enlarged Floor Plan (11)
    c. A602 – Interior Elevations (11)
    d. A603 – Interior Elevations (11)
    e. A906 – Equipment Schedule (both stations)
    f. A802 – Details (Station 11)
    g. A901 – Finish Schedule (Station 11)
    h. A903 – Floor Finish Plan (Station 11)

3. Vendor Drawings for Reference
    a. Elevator Preliminary Drawings
    b. Four Fold Doors – Outside Mount Arrangement
    c. Range Hood
    d. Exhaust Removal System
    e. Slide Drawings

SECTION 07 42 13 – FORMED METAL WALL PANELS

PART 1 - GENERAL

1.1 SECTION INCLUDES

A. Flush-profile, concealed fastener metal wall panels, with related metal trim and accessories

1.2 RELATED REQUIREMENTS

A. Division 05 Section "Structural Steel Framing" for steel framing supporting metal panels.

B. Division 05 Section "Cold-Formed Metal Framing" for cold-formed metal framing supporting metal panels.

C. Division 07 Section "Thermal Insulation" for thermal insulation installed behind metal panels.

D. Division 07 Section "Air Barriers" for air barriers within wall assembly and adjacent to wall assembly.

E. Division 07 Section "Sheet Metal Flashing and Trim" for sheet metal flashing items in addition to items specified in this Section.

1.3 REFERENCES

A. American Architectural Manufacturer's Association (AAMA): www.aamanet.org:
1. AAMA 621 - Voluntary Specifications for High Performance Organic Coatings on Coil Coated Architectural Hot Dipped Galvanized (HDG) & Zinc-Aluminum Coated Steel Substrates.
2. AAMA 809.2 Voluntary Specification Non-Drying Sealants.

B. American Society of Civil Engineers (ASCE): www.asce.org/codes-standards:
1. ASCE 7 - Minimum Design Loads for Buildings and Other Structures.

C. ASTM International (ASTM): www.astm.org:
1. ASTM A755 - Specification for Steel Sheet, Metallic Coated by the Hot-Dip Process and Prepainted by the Coil-Coating Process for Exterior Exposed Building Products.
2. ASTM A792/A792M - Standard Specification for Steel Sheet, 55% Aluminum-Zinc Alloy-Coated by the Hot-Dip Process.
3. ASTM C920 - Specification for Elastomeric Joint Sealants.
4. ASTM D2244 - Test Method for Calculation of Color Differences from Instrumentally Measured Color Coordinates.
5. ASTM D4214 - Test Methods for Evaluating Degree of Chalking of Exterior Paint Films.
6. ASTM E1592 - Standard Test Method for Structural Performance of Sheet Metal Roof and Siding Systems by Uniform Static Air Pressure Difference.

D. International Accreditation Service (IAS):
1. IAS AC472 Accreditation Criteria for Inspection Programs for Manufacturers of Metal Building Systems, Part B.

1.4 QUALITY ASSURANCE

A. Manufacturer/Source: Provide metal panel assemblies and accessories from a single manufacturer accredited under IAS AC472, Part B.

B. Manufacturer Qualifications: Approved manufacturer listed in this Section with minimum five years experience in manufacture of similar products in successful use in similar applications.
   1. Approval of Comparable Products: Submit the following in accordance with project substitution requirements, within time allowed for substitution review:
      a. Product data, including certified independent test data indicating compliance with requirements.
      b. Samples of each component.
      c. Sample shop drawings from similar project.
      d. Project References: Minimum of five installations not less than three years old, with Owner and Architect contact information.
      e. Sample warranty.
      f. Certificate of accreditation under IAS AC472 Part B.
   2. Substitutions following award of contract are not allowed except as stipulated in Division 01 General Requirements.
   3. Approved manufacturers must meet separate requirements of Submittals Article.

C. Installer Qualifications: Experienced Installer certified by metal panel manufacturer with minimum of five years experience with successfully completed projects of a similar nature and scope.
   1. Installer's Field Supervisor: Experienced mechanic certified by metal panel manufacturer supervising work on site whenever work is underway.

D. Steel Construction Publications: Comply with published recommendations in the following, unless more stringent requirements are indicated.
   1. American Institute of Steel Construction (AISC): "Steel Construction Manual."
   2. American Iron and Steel Institute (AISI): "Cold Formed Steel Design Manual."

1.5 ADMINISTRATIVE REQUIREMENTS

A. Preinstallation Meeting: Prior to erection of framing, conduct preinstallation meeting at site attended by Owner, Architect, metal panel installer, metal panel manufacturer's technical representative, inspection agency and related trade contractors.
   1. Coordinate building framing in relation to metal panel system.
   2. Coordinate openings and penetrations of metal panel system.
   3. Coordinate work of Division 07 Sections "Roof Specialties" and "Roof Accessories" and openings and penetrations and manufacturer's accessories with installation of metal panels.

1.6 ACTION SUBMITTALS

A. Product Data: Manufacturer’s data sheets for specified products. Include data indicating compliance with performance requirements.

B. Shop Drawings: Show layouts of metal panels. Include details of each condition of installation, panel profiles, and attachment to building. Provide details at a minimum scale 1-1/2-inch per foot of edge conditions, joints, fastener and sealant placement, flashings, openings, penetrations, and special details. Make distinctions between factory and field assembled work.
   1. Indicate points of supporting structure that must coordinate with metal panel system installation.
   2. Include structural data indicating compliance with performance requirements and requirements of local authorities having jurisdiction.

C. Samples for Initial Selection: For each exposed product specified including sealants. Provide representative color charts of manufacturer's full range of manufactured colors.

D. Samples for Verification: Provide 12-inch- (305 mm-) long section of each metal panel profile. Provide color chip verifying color selection.

1.7 INFORMATIONAL SUBMITTALS

A. Product Test Reports: Indicating compliance of products with requirements.

B. Qualification Information: For Installer firm and Installer's field supervisor.

C. IAS Accreditation Certificate: Indicating that manufacturer is accredited under provisions of IAS AC472 Part B.

D. Manufacturer's warranty: Unexecuted sample copy of manufacturer's warranty.

1.8 CLOSEOUT SUBMITTALS

A. Maintenance data.

B. Manufacturer's Warranty: Executed copy of manufacturer's warranty.

1.9 DELIVERY, STORAGE, AND HANDLING

A. Protect products of metal panel system during shipping, handling, and storage to prevent staining, denting, deterioration of components or other damage. Protect panels and trim bundles during shipping.
   1. Deliver, unload, store, and erect metal panels and accessory items without misshaping panels or exposing panels to surface damage from weather or construction operations.
   2. Store in accordance with Manufacturer's written instruction. Provide wood collars for stacking and handling in the field.
   3. Shield foam insulated metal panels from direct sunlight until installation.

1.10 WARRANTY

A. Special Manufacturer's Warranty: On manufacturer's standard form, in which manufacturer agrees to repair or replace metal panel assemblies that fail in materials and workmanship within two years from date of Substantial Completion.

B. Special Panel Finish Warranty: On Manufacturer's standard form, in which Manufacturer agrees to repair or replace metal panels that evidence deterioration of factory-applied finish within the warranty period, as follows:
   1. Fluoropolymer Two-Coat System:
      a. Basis of Design System: MBCI, Signature 300.
      b. Color fading in excess of 5 Hunter units per ASTM D 2244.
      c. Chalking in excess of No. 8 rating per ASTM D 4214.
      d. Failure of adhesion, peeling, checking, or cracking.
      e. Warranty Period: 20-years from date of Substantial Completion.

PART 2 - PRODUCTS

2.1 MANUFACTURER

A. Basis of Design Manufacturer: MBCI Metal Roof and Wall Systems, Division of NCI Group, Inc.; Houston TX. Tel: (877)713-6224; Email: info@mbci.com; Web: www.mbci.com.
   1. Provide basis of design product, or comparable product approved by Architect prior to bid.

2.2 PERFORMANCE REQUIREMENTS

A. General: Provide metal panel system meeting performance requirements as determined by application of specified tests by a qualified testing facility on manufacturer's standard assemblies.

B. Structural Performance: Provide metal panel assemblies capable of withstanding the effects of indicated loads and stresses within limits and under conditions indicated, as determined by ASTM E1592:
   1. Wind Loads: Determine loads based on uniform pressure, importance factor, exposure category, and basic wind speed indicated on drawings.
      a. Wind Negative Pressure: Certify capacity of metal panels by actual testing of proposed assembly.
   2. Deflection Limits: Withstand inward and outward wind-load design pressures in accordance with applicable building code with maximum deflection of 1/120 of the span with no evidence of failure.
   3. Seismic Performance: Comply with ASCE 7 Sections 9, "Earthquake Loads."

C. Thermal Movements: Allow for thermal movements from variations in both ambient and internal temperatures. Accommodate movement of support structure caused by thermal expansion and contraction. Allow for deflection and design for thermal stresses caused by temperature differences from one side of the panel to the other.

2.3 FORMED METAL WALL PANELS

A. Flush-Profile, Concealed Fastener Metal Wall Panels: Structural metal panels consisting of formed metal sheet with vertical panel edges and flat pan, with flush joints between panels, field assembled with nested lapped edges, and attached to supports using concealed fasteners.
   1. Basis of Design: MBCI, FW-120-1, installed horizontally.
   2. Aluminum-Zinc Alloy-Coated Steel Sheet: ASTM A792/A792M, structural quality, Grade 50, Coating Class AZ50 (Grade 340, Coating Class AZM150), pre-painted by the coil-coating process per ASTM A755/A755M.
      a. Nominal Thickness: [22 gage] coated thickness, with smooth surface.
         1) Exterior Finish: Fluoropolymer two-coat metallic color system
         2) Color: As selected by Architect from manufacturer's full range of manufactured colors and textures.
   3. Panel Width: 12 inches (305 mm).
   4. Panel Thickness: 1-1/2 inch (44 mm).

2.4 SOFFIT PANELS

A. Basis of Design: MBCI Artisan Panel (12”)

2.5 MISCELLANEOUS MATERIALS

A. General: Provide complete metal panel assemblies incorporating trim, copings, fascia, gutters and downspouts, and miscellaneous flashings. Provide required fasteners, closure strips, and sealants as indicated in manufacturer's written instructions.

B. Flashing and Trim: Match material, thickness, and finish of metal panels.

C. Panel Fasteners: Self-tapping screws and other acceptable fasteners recommended by metal panel manufacturer. Where exposed fasteners cannot be avoided, supply corrosion-resistant fasteners with heads matching color of metal panels by means of factory-applied coating, with weathertight resilient washers.

D. Panel Sealants:
1. VOC Content of Interior Sealants: Sealants used inside the weatherproofing system shall comply with the following limits for VOC content when calculated according to 40 CFR 59, Subpart D (EPA Method 24):
a. Architectural Sealants: 250 g/L.

2.6 FABRICATION

A. General: Provide factory fabricated and finished metal panels, trim, and accessories meeting performance requirements, indicated profiles, and structural requirements.

B. Sheet Metal Flashing and Trim: Fabricate flashing and trim to comply with manufacturer's written instructions, approved shop drawings, and project drawings.

2.7 FINISHES

A. Finishes, General: Prepare, pretreat, and apply coating to exposed metal surfaces to comply with coating and resin manufacturers' written instructions.

B. Fluoropolymer Two-Coat System: 0.2 – 0.3 mil primer with 0.7 - 0.8 mil 70 percent PVDF fluoropolymer color coat, AAMA 621, meeting solar reflectance index requirements.
1. Basis of Design: MBCI, Signature 300.

PART 3 - EXECUTION

3.1 EXAMINATION

A. Examine metal panel system substrate with Installer present. Inspect for erection tolerances and other conditions that would adversely affect installation of metal panels.
1. Inspect framing that will support insulated metal panels to determine if support components are installed as indicated on approved shop drawings and are within tolerances acceptable to metal panel manufacturer and installer. Confirm presence of acceptable framing members at recommended spacing to match installation requirements of metal panels.

B. Correct out-of-tolerance work and other deficient conditions prior to proceeding with insulated metal panel installation.

3.2 METAL PANEL INSTALLATION

A. Concealed-Fastener Formed Metal Panels: Install metal panel system in accordance with manufacturer's written instructions, approved shop drawings, project drawings, and referenced publications. Install metal panels in orientation, sizes, and locations indicated. Anchor panels and other components securely in place. Provide for thermal and structural movement.

B. Fasten metal panels to supports with fasteners at each location indicated on approved shop drawings, at spacing and with fasteners recommended by manufacturer. Fasten panel to support structure through leading panel flange. Snap-fit back flange of subsequent panel into secured flange of previous panel. Where indicated, fasten panels together through flush-fitted panel sides.
1. Cut panels in field where required using manufacturer's recommended methods.
2. Dissimilar Materials: Where elements of metal panel system will come into contact with dissimilar materials, treat faces and edges in contact with dissimilar materials as recommended by metal panel manufacturer.

C. Attach panel flashing trim pieces to supports using recommended fasteners.

3.3 ACCESSORY INSTALLATION

A. General: Install metal panel accessories with positive anchorage to building and weather tight mounting; provide for thermal expansion. Coordinate installation with flashings and other components.
   1. Install components required for a complete metal panel assembly, including trim, copings, flashings, sealants, closure strips, and similar items.
   2. Comply with details of assemblies utilized to establish compliance with performance requirements and manufacturer's written installation instructions.
   3. Set units true to line and level as indicated. Install work with laps, joints, and seams that will be permanently weather resistant.

3.4 CLEANING AND PROTECTION

A. Clean finished surfaces as recommended by metal panel manufacturer.

B. Replace damaged panels and accessories that cannot be repaired to the satisfaction of the Owner/Architect.

END OF SECTION 07 42 13

SECTION 08 33 00 - OVERHEAD COILING DOORS

PART 1 GENERAL

1.1 SECTION INCLUDES

A. Overhead coiling sheet doors.

1.2 RELATED SECTIONS

A. Section 05500 - Metal Fabrications: Support framing and framed opening.

B. Section 06200 - Finish Carpentry: Wood jamb and head trim.

C. Section 08710 - Door Hardware: Product Requirements for cylinder core and keys.

D. Section 09900 - Painting: Field applied finish.

1.3 REFERENCES

A. ASTM A 653 - Standard Specification for Steel Sheet, Zinc-Coated (Galvanized) or Zinc-Iron Alloy-Coated (Galvannealed) by the Hot-Dip Process.

B. ASTM A 666 - Standard Specification for Austenitic Stainless Steel Sheet, Strip, Plate, and Flat Bar.

C. ASTM A 924 - Standard Specification for General Requirements for Steel Sheet, Metallic-Coated by the Hot-Dip Process.

D. ASTM B 221 - Standard Specification for Aluminum and Aluminum-Alloy Extruded Bars, Rods, Wire, Profiles, and Tubes.

E. NEMA 250 - Enclosures for Electrical Equipment (1000 Volts Maximum).

F. NEMA MG 1 - Motors and Generators.

1.4 DESIGN / PERFORMANCE REQUIREMENTS

A. Overhead coiling sheet doors:
   1. Wind Loads: Design door assembly to withstand wind/suction load of 25/37.5 psf (1197/1796 Pa) without damage to door or assembly components.
   2. Operation: Design door assembly, including operator, to operate for not less than 10,000 cycles.

B. Single-Source Responsibility: Provide doors, tracks, motors, and accessories from one manufacturer for each type of door. Provide secondary components from source acceptable to manufacturer of primary components.

1.5 SUBMITTALS

A. Submit under provisions of Section 01 33 00.

B. Product Data: Manufacturer's data sheets on each product to be used, including:
   1. Preparation instructions and recommendations.
   2. Storage and handling requirements and recommendations.

3. Details of construction and fabrication.
4. Installation instructions.

C. Shop Drawings: Include detailed plans, elevations, details of framing members, anchoring methods, required clearances, hardware, and accessories. Include relationship with adjacent construction.

D. Selection Samples: For each finish product specified, two complete sets of color chips representing manufacturer's full range of available colors and patterns.

E. Verification Samples: For each finish product specified, two samples, minimum size 6 inches (150 mm) long, representing actual product, color, and patterns.

F. Manufacturer's Certificates: Certify products meet or exceed specified requirements.

G. Operation and Maintenance Data: Submit lubrication requirements and frequency, and periodic adjustments required.

1.6 QUALITY ASSURANCE

A. Manufacturer Qualifications: Company specializing in performing Work of this section with a minimum of five years experience in the fabrication and installation of security closures.

B. Installer Qualifications: Installer Qualifications: Company specializing in performing Work of this section with minimum three years and approved by manufacturer.

C. Mock-Up: Provide a mock-up for evaluation of surface preparation techniques and application workmanship.
1. Finish areas designated by Architect.
2. Do not proceed with remaining work until workmanship, color, and sheen are approved by Architect.
3. Refinish mock-up area as required to produce acceptable work.

1.7 DELIVERY, STORAGE, AND HANDLING

A. Store products in manufacturer's unopened packaging until ready for installation.

B. Protect materials from exposure to moisture. Do not deliver until after wet work is complete and dry.

C. Store materials in a dry, warm, ventilated weathertight location.

1.8 PROJECT CONDITIONS

A. Maintain environmental conditions (temperature, humidity, and ventilation) within limits recommended by manufacturer for optimum results. Do not install products under environmental conditions outside manufacturer's absolute limits.

1.9 COORDINATION

A. Coordinate Work with other operations and installation of adjacent materials to avoid damage to installed materials.

PART 2 PRODUCTS

2.1 MANUFACTURERS

A. Acceptable Manufacturer: Overhead Door Corp., 2501 S. State Hwy. 121, Suite 200, Lewisville, TX 75067. ASD. Tel. Toll Free: (800) 275-3290. Phone: (469) 549-7100. Fax: (972) 906-1499. Web Site: www.overheaddoor.com. E-mail: info@overheaddoor.com.

B. Substitutions: Approved Equivalent meeting specification requirements.

C. Requests for substitutions will be considered in accordance with provisions of Section 01 25 13.

2.2 OVERHEAD COILING SHEET DOORS

A. Overhead Coiling Commercial Windloaded Sheet Doors: Overhead Door Corporation 790 Series.

1. Curtain: Roll formed, 26 gauge galvanized steel, per ASTM A 653, SQ Grade 80, Galvanized G-30. Sections interlocked and permanently seamed together to form a continuous curtain. Provided with a PVC edge strip stapled on the edge of curtain's exterior side to minimize steel-to-steel contact, enhance door operation, and minimize curtain nesting and scratching. Curtain shall have 9 gauge ductile iron windlocks on each edge of the curtain spaced according to door size and the application's windloading requirements.

2. Finish:
   a. Curtain slats shall receive rust-inhibitive, roll coating process, including 0.2 mils thick baked-on prime paint, and 0.6 mils thick baked-on polyester top coat.

   b. Top Coat Color:
      1) As selected by the Architect from the manufacturers standard colors.

   c. Guides, angles, bottom bar stops, headplates and rings galvanized. Aluminum bottom bar clear anodized.

3. Bottom Bar: Extruded aluminum reinforced with 1-1/2 inch by 2 inch (38 mm by 51 mm) roll formed steel angle and provided with a flexible PVC bulb type astragal to ensure a consistent seal along the floor. Extrusion designed to interlock with door curtain.

4. Bottom Bar Stops: Bottom bar stops of "quick connect" design that allows the curtain to be inserted into the "universal" guide and lock into place with one fastener. Bottom bar stops shall be 12 gauge.

5. Guides: Guides roll-formed from 14-gauge grade 50 galvanized steel. Guides 3 inches (76 mm) wide with UHMW polypropylene rub strips on each edge of the guide. Through hole, universal design shall allow easy access from the front of the guide for fastener attachment to the door jamb material. Guides of universal design for use in concrete, wood, steel or masonry jambs Guides pre-punched to accept "quick connect" attachment of the bottom bar stops.

6. Headplates: Stamped 11 gauge steel, mounted directly to the wall to support the door shaft and ensure smooth door roll operation.

7. Heavy Duty Headplates: 0.187 inch (4.76 mm) thick welded steel, mounted directly to the wall to support the door shaft and ensure smooth door roll operation.

8. Counterbalance: Counterbalance assembly with “stepped” steel rings designed to ensure a tight and uniform curtain wrap. Rings include steel roller bearings for enhanced door operation and cycle life. 3-3/8 inch (86 mm) I.D. springs lubricated at factory to enhance long life and door operation. Shaft 1-5/16 inch (35 mm) diameter to minimize door deflection. Counterbalance assembly design to allow quick assembly of “non-handed” chain hoist on either side of door on the job site.

9. Manual Operation:
   a. Manual push up.
   b. Chain hoist with 6:1 reduced drive.

10. Locking:
    a. Standard Interior bottom bar slide bolt on each end of the door’s bottom bar assembly.

PART 3 EXECUTION

3.1 EXAMINATION

A. Verify opening sizes, tolerances and conditions are acceptable.

B. Examine conditions of substrates, supports, and other conditions under which this work is to be performed.

C. If substrate preparation is the responsibility of another installer, notify Architect of unsatisfactory preparation before proceeding.

3.2 PREPARATION

A. Clean surfaces thoroughly prior to installation.

B. Prepare surfaces using the methods recommended by the manufacturer for achieving the best result for the substrate under the project conditions.

3.3 INSTALLATION

A. Install in accordance with manufacturer's instructions.

B. Use anchorage devices to securely fasten assembly to wall construction and building framing without distortion or stress.

C. Securely and rigidly brace components suspended from structure. Secure guides to structural members only.

D. Fit and align assembly including hardware; level and plumb, to provide smooth operation.

E. Coordinate installation of sealants and backing materials at frame perimeter as specified in Section 07 92 00.

F. Install perimeter trim and closures.

G. Instruct Owner’s personnel in proper operating procedures and maintenance schedule.

3.4 ADJUSTING

A. Test for proper operation and adjust as necessary to provide proper operation without binding or distortion.

B. Adjust hardware and operating assemblies for smooth and noiseless operation.

3.5 CLEANING

A. Clean curtain and components using non-abrasive materials and methods recommended by manufacturer.

B. Remove labels and visible markings.

C. Touch-up, repair or replace damaged products before Substantial Completion.

3.6 PROTECTION

A. Protect installed products until completion of project.

END OF SECTION 08 33 00

SECTION 11 30 00 - RESIDENTIAL APPLIANCES

PART 1 – GENERAL

1.01 SECTION INCLUDES

A. Install the following Owner-Furnished appliances:
   1. Washers / Dryers – (1) each at each Fire Station
   2. Refrigerators – (3) at each Fire Station
   2. Freezers – (3) at each Fire Station
   3. Kitchen Ranges – (1) at each Fire Station

B. Furnish and Install the following appliances:
   1. Range Hoods – (1) at each Fire Station

C. Owner will Furnish and Install the following appliances (not part of contract):
   1. Microwave
   2. Ice Machine

1.02 SUBMITTALS

A. Product Data:
   1. Manufacturer's specifications and other data needed to prove compliance with specified requirements.
   2. Manufacturer's installation instructions.
   3. Manufacturer's operation and maintenance instructions.

B. Samples or color charts showing manufacturer's full range of colors.

PART 2 – PRODUCTS

2.01 APPLIANCE AND MANUFACTURERS

A. Range Hood:
   1. Finish: Stainless Steel
   2. Exhaust Only (Fan Unit Model #20D); 1250 CFM
   3. Hood: 60"w x 48"d x 24"h
      a. Exhaust Chamber with 3" air gap from wall
      b. Stainless Steel Side Curtains
      c. 20" Baffle Grease Filter
      d. Stainless Steel Grease Cup
      e. 100W Pre-Wired Lights
   4. Quantity: 1 at each Fire Station
   5. Approved Manufacturer:
      a. North American Kitchen Solutions; Elyria, Ohio; Chad Jordan; 800-715-1014; sales@naksinc.com; cjordan@naksinc.com
      b. Approved Equivalent during bidding

PART 3 – EXECUTION

3.01 EXAMINATION

A. Examine areas where appliances are to be installed to ensure proper opening sizes and that areas are ready to receive appliance installation.

B. Ensure that proper utilities are in place.

3.02 INSTALLATION

A. Install all appliances and equipment in accordance with manufacturer's printed instructions.

3.03 ADJUSTING AND CLEANING

A. Adjust appliances and equipment for proper operation.

B. Clean appliances and equipment of dirt, dust, fingerprints and markings detrimental to good appearance.

END OF SECTION 11 30 00

SECTION 12 21 00 – WINDOW COVERINGS

PART 1 - GENERAL

1.01 SUMMARY

A. Section Includes:
   a. Horizontal louver blinds.
   b. Blackout Roller Shades

1.02 SUBMITTALS

A. Product Data: Manufacturer's specifications describing features, colors, options, accessories, for each type of unit. Include installation instructions and show how installation methods may differ for different openings and mounting substrates.

B. Shop Drawings:
   1. Window blinds: Indicate special parts and installation conditions which are not shown or dimensioned in product data.
   2. Show how this work adjoins other work.
   3. Show layout of blind units, in elevation, including meeting edges and corners.

C. Schedule: Complete schedule with field measurements for each unit.

D. Samples:
   1. For color selection: Color charts showing full range of colors and finishes available.
   2. For color verification: Samples of actual components to be used; provide for all exposed materials.
   3. For each window treatment type: One sample identical with actual product to be used except overall size may be smaller.

E. Certificates: For information only, submit manufacturer's written certification stating compliance with requirements for physical properties indicated.

F. Contract Closeout Submittals: Operation and maintenance data; include manufacturer's written operation and maintenance instructions.

G. Warranty: For information, include specimen of manufacturer's written warranty.

1.03 QUALITY ASSURANCE

A. Manufacturer qualifications: A company manufacturing all components of products specified in this section which have performed in a satisfactory manner for at least 3 years.

B. Installer qualifications: Company specializing in fabrication and installation of specified products, with at least 2 years of experience fabricating and installing similar products.

1.04 DELIVERY, STORAGE, AND HANDLING

A. Deliver materials in factory packages, marked with manufacturer and product name and location

of installation.

B. Store materials in dry area maintained at building's operating temperature and humidity.

C. Follow manufacturer's instructions to prevent damage.

1.05 SEQUENCING AND SCHEDULING

A. Do not install window treatment until wet and dirty work is complete.

1.06 WARRANTY

A. Submit manufacturer's standard 2-year warranty, which shall not reduce or otherwise limit any other rights to correction which the Owner may have under the contract documents.

1.07 EXTRA MATERIALS

A. Furnish matching extra material packaged for long-term storage and labeled for easy identification.

B. Window Blinds: Provide 5 percent of the total quantity installed of each type and color.

PART 2 - PRODUCTS

2.01 HORIZONTAL LOUVER BLINDS

A. Horizontal Louver Blinds - General:
1. Comply with FS AA-V-00200.
2. Horizontal Blind Units: Complete with accessories, installation brackets, hardware, and fasteners; for each type, provide products of only one manufacturer.

B. Head Rail: Formed steel channel section, enclosing tilt and lift mechanisms; minimum 24 gage sheet; long edges returned or rolled; with reinforcing as required for rigidity.
1. Track size: 1 inch high by 1-1/2 inches wide.
2. Enclose all hardware required for blind operation in headrail.
3. Finish rails the same color as louvers.

C. Bottom Rail: Finish to match louvers.
1. Formed steel rail, designed not to twist or sag.
2. Curve top of rail to match louver radius.
3. Cap ends with plastic or metal caps; color to match rail.

D. Louvers: Aluminum, min. 0.008 inch thick, curved cross-section with smooth round corners.
1. Width: 1-inch (25 mm) nominal; size other parts to fit.
2. Design and space louvers to minimize light penetration when closed.

E. Ladders: Hold louvers at correct spacing and angle in all tilt positions; braided polyester cord ladder; verticals of 0.04 to 0.07 inch diameter; horizontals of not less than 2 threads braided into verticals; spaced to prevent long-term louver sag, but not over 24 inches apart and not over 7 inches from ends of louvers.

F. Tilt Mechanism: Hold louvers at any tilt angle despite normal building vibration; worm gear that disengages at limits of tilt with low friction tilter; provide drum at each ladder, linkage rod, and grommets for ladder and operating cords. Tilt wand: Clear plastic, detachable; length as necessary to make operation convenient from floor level.

G. Lift Mechanism: Lift cords of nylon or polyester with pulls; cord lock that holds bottom rail securely at any level; cord separators.

H. Brackets: Design for easy removal and re-installation of blind.
1. Design to withstand dead weight and operating stresses.
2. Provide brackets at ends and at intervals recommended by manufacturer.
3. Include fasteners appropriate for substrate.

I. Accessories:
1. Valance: Two louvers in clear plastic frame; removable; match appearance of blind.
2. Hold-downs: Provide two brackets at lowest position of bottom rail, engaging hook or pin on bottom rail end caps.

J. Finish: All components factory-finished.
1. Steel: Baked-on enamel finish; prepared by galvanizing, and phosphatizing or priming.
2. Aluminum: Baked-on enamel finish; prepared by chemical conversion coating.
3. Concealed components: Corrosion-resistant finish.
4. Pattern/color: Selected by Architect, after contract award, from manufacturer's full range.
5. Exposed items other than louvers: Match color of rails.

K. Manufacturers: Products of the following manufacturers, provided they comply with requirements of the contract documents, will be among those considered acceptable:
1. Hunter Douglas, Inc./Window Covering Division.
2. Kirsch Company.
3. Levelor Corporation.
4. Springs Window Fashions (Bali/Graber).

2.02 ROLLER SHADES

A. Blackout Roller Shade - General:
1. Blackout Roller Shade: Manually operated chain driven darkening balckout roller shade complete with accessories, installation brackets, hardware, and fasteners; for each type, provide products of only one manufacturer.

B. Fascia: Continuous removable extruded aluminum fascia that attaches to shade mounting brackets without the use of adhesives, magnetic strips, or exposed fasteners.
1. Full length single piece shall span the full length of the roller shade
2. Fully conceal brackets, shade roller and fabric on the tube.
3. Provide bracket/fascia end caps where mounting conditions expose outside of roller shade brackets.
4. Include channel (aluminum with polybondedge seals and snaploc mounting base with concealed fasteners) for application of flexible material to closing off any light leakage between fascia and window frame, mullion, ceiling and/or any other horizontal surface.
5. Fascia shall positively lock in a top-down installation method to help prevent accidental detachment.
6. Finish rails the same color as louvers.

C. Manufacturers: Products of the following manufacturers, provided they comply with requirements of the contract documents, will be among those considered acceptable:
   1. Hunter Douglas, Inc./Window Covering Division.
   2. Kirsch Company.
   3. Levelor Corporation.
   4. Springs Window Fashions (Bali/Graber).
   5. Insolroll

2.03 FABRICATION

A. Fabricate to fit actual construction; take field measurements of openings before starting fabrication.

B. Use materials that are compatible, will not need to be lubricated, and which will not adversely affect adjacent materials.

C. Make blinds fill each opening completely, from jamb to jamb and from head to sill, with a single blind unit, unless multiple units are specifically indicated.

D. Horizontal Louver Blinds:
   1. Space ladders in accordance with manufacturer's instructions.
   2. Space louvers to positively overlap when closed.
   3. Limit tilting to the following range:
      a. 60 degrees to 120 degrees.
   4. Install tilt controls as directed by the Architect.
   5. Install lift cords in locations directed by the Architect.

E. Blackout Roller Shade:
   1. Provide shade hardware allowing for the removal of shade roller tube from brackets without removing hardware from opening and without requiring end or center support to be removed.
   2. Provide for universal regular and offset drive capability which enables the drive chain to always fall in front of the fabric plane.
   3. Shade hardware constucted of minimum 16 ga. thick plated steel or heavier as required to support 150 percent of the full weight of each shade.
   4. Shade fabric composed of 100% polyester with acrylic foamed backing (PVC-free) shall provide total blackout.

PART 3 - EXECUTION

3.01 EXAMINATION

A. Examine substrates at locations in which window blinds will be installed. Do not begin installation until conditions are correct.

3.02 INSTALLATION

A. Install blinds and roller shades in accordance with manufacturer's installation instructions.

B. Set units in correct location, plumb, and level; allow clearance for window operating hardware.

C. Fasten securely to substrates.

D. Separate metal components from concrete and masonry using plastic tape or other suitable material.

E. Adjust each blind and roller shade for proper operation; replace defective and damaged units.

F. Protect installed work.

END OF SECTION 12 21 00

SECTION 14 24 00 - MACHINE ROOM-LESS HYDRAULIC PASSENGER ELEVATORS

PART 1 GENERAL

1.01 SUMMARY

A. Section includes: Machine room-less hydraulic passenger elevators as shown and specified. Elevator work includes:

1. Standard pre-engineered hydraulic passenger elevators.
2. Elevator car enclosures, hoistway entrances and signal equipment.
3. Operation and control systems.
4. Jack(s).
5. Accessibility provisions for physically disabled persons.
6. Equipment, machines, controls, systems and devices as required for safely operating the specified elevators at their rated speed and capacity.
7. Materials and accessories as required to complete the elevator installation.

B. Related Sections:

1. Division 1 General Requirements: Meet or exceed all referenced sustainability requirements.
2. Division 3 Concrete: Installing inserts, sleeves and anchors in concrete.
3. Division 4 Masonry: Installing inserts, sleeves and anchors in masonry.
4. Division 5 Metals:
   a. Providing hoist beams, pit ladders, steel framing, auxiliary support steel and divider beams for supporting guide-rail brackets.
   b. Providing steel angle sill supports and grouting hoistway entrance sills and frames.
5. Division 9 Finishes: Providing elevator car finish flooring and field painting unfinished and shop primed ferrous materials.
6. Division 16 Sections:
   a. Providing electrical service to elevators, including fused disconnect switches where permitted. (note: fused disconnect switch to be provided as part of elevator manufacture product, see section 2.11 Miscellaneous elevator components for further details.)
   b. Emergency power supply, transfer switch and auxiliary contacts.
   c. Heat and smoke sensing devices.
   d. Convenience outlets and illumination in control room (if applicable), hoistway and pit.
7. Division 22 Plumbing
   a. Sump pit and oil interceptor.
8. Division 23 Heating, Ventilation and Air Conditioning
   a. Heating and ventilating hoistways and/or control room.

C. Work Not Included: General contractor shall provide the following in accordance with the requirements of the Model Building Code and ANSI A17.1 Code. For specific rules, refer to ANSI A17.1, Part 3 for hydraulic elevators. State or local requirements must be used if more stringent. The cost of this work is not included in the thyssenkrupp Elevator's proposal, since it is a part of the building construction.

1. Elevator hoist beam to be provided at top of elevator shaft. Beam must be able to accommodate proper loads and clearances for elevator installation and operation.
2. Supply in ample time for installation by other trades, inserts, anchors, bearing plates, brackets, supports and bracing including all setting templates and diagrams for placement.
3. Hatch walls require a minimum two hours of fire rating. Hoistway should be clear and plumb with variations not to exceed 1/2" at any point.
4. Elevator hoistways shall have barricades, as required.
5. Install bevel guards at 75° on all recesses, projections or setbacks over 2" (4" for A17.1 2000 areas) except for loading or unloading.
6. Provide rail bracket supports at pit, each floor and roof. For guide rail bracket supports, provide divider beams between hoistway at each floor and roof.
7. Pit floor shall be level and free of debris. Reinforce dry pit to sustain normal vertical forces from rails and buffers.
8. Where pit access is by means of the lowest hoistway entrance, a vertical ladder of non-combustible material extending 42" minimum, (48" minimum for A17.1-2000 areas) shall be provided at the same height, above sill of access door or handgrips.
9. All wire and conduit should run remote from the hoistways.
10. When heat, smoke or combustion sensing devices are required, connect to elevator control cabinet terminals. Contacts on the sensors should be sided for 12 volt D.C.
11. Install and furnish finished flooring in elevator cab.
12. Finished floors and entrance walls are not to be constructed until after sills and door frames are in place. Consult elevator contractor for rough opening size. The general contractor shall supply the drywall framing so that the wall fire resistance rating is maintained, when drywall construction is used.
13. Where sheet rock or drywall construction is used for front walls, it shall be of sufficient strength to maintain the doors in true lateral alignment. Drywall contractor to coordinate with elevator contractor.
14. Before erection of rough walls and doors; erect hoistway sills, headers, and frames. After rough walls are finished; erect fascias and toe guards. Set sill level and slightly above finished floor at landings.
15. To maintain legal fire rating (masonry construction), door frames are to be anchored to walls and properly grouted in place.
16. The elevator wall shall interface with the hoistway entrance assembly and be in strict compliance with the elevator contractor's requirements.
17. General Contractor shall fill and grout around entrances, as required.
18. All walls and sill supports must be plumb where openings occur.

19. Locate a light fixture (200 lx / 19 fc) and convenience outlet in pit with switch located adjacent to the access door.
20. Provide telephone line, light fixture (200 lx / 19 fc), and convenience outlet in the hoistway at the landing where the elevator controller is located. Typically this will be at the landing above the 1st floor. Final location must be coordinated with elevator contractor.
21. As indicated by elevator contractor, provide a light outlet for each elevator, in center of hoistway.
22. For signal systems and power operated door: provide ground and branch wiring circuits.
23. For car light and fan: provide a feeder and branch wiring circuits to elevator control cabinet.
24. Controller landing wall thickness must be a minimum of 8 inches thick. This is due to the controller being mounted on the second floor landing in the door frame on the return side of the door. For center opening doors, the controller is located on the right hand frame (from inside the elevator cab looking out). These requirements must be coordinated between the general contractor and the elevator contractor.
25. Cutting, patching and recesses to accommodate hall button boxes, signal fixtures, etc..

1.02 SUBMITTALS

A. Product data: When requested, the elevator contractor shall provide standard cab, entrance and signal fixture data to describe product for approval.

B. Shop drawings:

1. Show equipment arrangement in the corridor, pit, and hoistway and/or optional control room. Provide plans, elevations, sections and details of assembly, erection, anchorage, and equipment location.
2. Indicate elevator system capacities, sizes, performances, safety features, finishes and other pertinent information.
3. Show floors served, travel distances, maximum loads imposed on the building structure at points of support and all similar considerations of the elevator work.
4. Indicate electrical power requirements and branch circuit protection device recommendations.

C. Powder Coat paint selection: Submit manufacturer’s standard selection charts for exposed finishes and materials.

D. Plastic laminate selection: Submit manufacturer’s standard selection charts for exposed finishes and materials.

E. Metal Finishes: Upon request, standard metal samples provided.

F. Operation and maintenance data. Include the following:

1. Owner's manuals and wiring diagrams.
2. Parts list, with recommended parts inventory.

1.03 QUALITY ASSURANCE

A. Manufacturer Qualifications: An approved manufacturer with minimum 15 years of experience in manufacturing, installing, and servicing elevators of the type required for the project.

1. The manufacturer of machines, controllers, signal fixtures, door operators cabs, entrances, and all other major parts of elevator operating equipment.
   a. The major parts of the elevator equipment shall be manufactured by the installing company, and not be an assembled system.
2. The manufacturer shall have a documented, on-going quality assurance program.
3. ISO-9001:2000 Manufacturer Certified
4. ISO-14001:2004 Environmental Management System Certified
5. LEED Gold certified elevator manufacturing facility.

B. Installer Qualifications: The manufacturer or an authorized agent of the manufacturer with not less than 15 years of satisfactory experience installing elevators equal in character and performance to the project elevators.

C. Regulatory Requirements:

1. ASME A17.1 Safety Code for Elevators and Escalators, latest edition or as required by the local building code.
2. Building Code: National.
3. NFPA 70 National Electrical Code.
4. NFPA 80 Fire Doors and Windows.
5. Americans with Disabilities Act - Accessibility Guidelines (ADAAG)
6. Section 407 in ICC A117.1, when required by local authorities
7. CAN/CSA C22.1 Canadian Electrical Code
8. CAN/CSA B44 Safety Code for Elevators and Escalators.
9. California Department of Public Health Standard Method V1.1–2010, CA Section 01350

D. Fire-rated entrance assemblies: Opening protective assemblies including frames, hardware, and operation shall comply with ASTM E2074, CAN4-S104 (ULC-S104), UL10(b), and NFPA Standard 80. Provide entrance assembly units bearing Class B or 1 1/2 hour label by a Nationally Recognized Testing Laboratory (2 hour label in Canada).

E. Inspection and testing:

1. Elevator Installer shall obtain and pay for all required inspections, tests, permits and fees for elevator installation.
2. Arrange for inspections and make required tests.

3. Deliver to the Owner upon completion and acceptance of elevator work.

F. Sustainable Product Qualifications:

1. Environmental Product Declaration:
   a. GOOD: If Product Category Rules (PCR) are not available, produce a publicly available, critically reviewed life-cycle assessment conforming to ISO 14044 that has at least a cradle to gate scope.
   b. BEST: If Product Category Rules (PCR) are available, produce and publish an Environmental Product Declaration (EPD) based on a critically reviewed life-cycle assessment conforming to ISO 14044, with external verification recognized by the EPD program operator.
2. Material Transparency:
   a. GOOD: Provide Health Product Declaration at any level
   b. BETTER: Provide Health Product Declaration (HPD v2 or later). Complete, published declaration with full disclosure of known hazards, prepared using the Health Product Declaration Collaborative's "HPD builder" on-line tool.
   c. BEST: Cradle to Cradle Material Health Certificate v3, Bronze level or higher.
3. LEED v4 – Provide documentation for all Building Product Disclosure AND Optimization credits in LEED v4 for product specified.
4. Living Building Challenge Projects: Provide Declare label for products specified.

1.04 DELIVERY, STORAGE AND HANDLING

A. Manufacturing shall deliver elevator materials, components and equipment and the contractor is responsible to provide secure and safe storage on job site.

1.05 PROJECT CONDITIONS

A. Temporary Use: Elevators shall not be used for temporary service or for any other purpose during the construction period before Substantial Completion and acceptance by the purchaser unless agreed upon by Elevator Contractor and General Contractor with signed temporary agreement.

1.06 WARRANTY

A. Warranty: Submit elevator manufacturer's standard written warranty agreeing to repair, restore or replace defects in elevator work materials and workmanship not due to ordinary wear and tear or improper use or care for 12 months after final acceptance.

1.07 MAINTENANCE

A. Furnish maintenance and call back service for a period of 12 months for each elevator after completion of installation or acceptance thereof by beneficial use, whichever is earlier, during normal working hours excluding callbacks.

1. Service shall consist of periodic examination of the equipment, adjustment, lubrication, cleaning, supplies and parts to keep the elevators in proper operation. Maintenance work,

including emergency call back repair service, shall be performed by trained employees of the elevator contractor during regular working hours.

2. Submit parts catalog and show evidence of local parts inventory with complete list of recommended spare parts. Parts shall be produced by manufacturer of original equipment.
3. Manufacturer shall have a service office and full time service personnel within a 100 mile radius of the project site.

PART 2 PRODUCTS

2.01 MANUFACTURERS

A. Manufacturer: Design based around thyssenkrupp Elevator's endura Machine Room-Less hydraulic elevator.

2.02 MATERIALS, GENERAL

A. All Elevator Cab materials including frame, buttons, lighting, wall and ceiling assembly, laminates and carpet shall have an EPD and an HPD, and shall meet the California Department of Public Health Standard Method V1.1–2010, CA Section 01350 as mentioned in 1.03.9 of this specification.

B. Colors, patterns, and finishes: As selected by the Architect from manufacturer's full range of standard colors, patterns, and finishes.

C. Steel:

1. Shapes and bars: Carbon.
2. Sheet: Cold-rolled steel sheet, commercial quality, Class 1, matte finish.
3. Finish: Factory-applied baked enamel for structural parts, powder coat for architectural parts. Color selection must be based on elevator manufacture's standard selections.

D. Plastic laminate: Decorative high-pressure type, complying with NEMA LD3, Type GP-50 General Purpose Grade, nominal 0.050" thickness. Laminate selection must be based on elevator manufacture's standard selections.

E. Flooring by others.

2.03 HOISTWAY EQUIPMENT

A. Platform: Fabricated frame of formed or structural steel shapes, gusseted and rigidly welded with a wood sub-floor. Underside of the platform shall be fireproofed. The car platform shall be designed and fabricated to support one-piece loads weighing up to 25% of the rated capacity.

B. Sling: Steel stiles bolted or welded to a steel crosshead and bolstered with bracing members to remove strain from the car enclosure.

C. Guide Rails: Steel, omega shaped, fastened to the building structure with steel brackets.

D. Guides: Slide guides shall be mounted on top and bottom of the car.

E. Buffers: Provide substantial buffers in the elevator pit. Mount buffers on continuous channels fastened to the elevator guide rail or securely anchored to the pit floor. Provide extensions if required by project conditions.

F. Jack: A jack unit shall be of sufficient size to lift the gross load the height specified. Factory test jack to ensure adequate strength and freedom from leakage. Brittle material, such as gray cast iron, is prohibited in the jack construction. Provide the following jack type: Twin post holeless. Two jacks piped together, mounted one on each side of the car with a polished steel hydraulic plunger housed in a sealed steel casing having sufficient clearance space to allow for alignment during installation. Each plunger shall have a high pressure sealing system which will not allow for seal movement or displacement during the course of operation. Each Jack Assembly shall have a check valve built into the assembly to allow for automatically re-syncing the two plunger sections by moving the jack to its fully contracted position. The jack shall be designed to be mounted on the pit floor or in a recess in the pit floor. Each jack section shall have a bleeder valve to discharge any air trapped in the section..

G. Automatic Self-Leveling: Provide each elevator car with a self-leveling feature to automatically bring the car to the floor landings and correct for over travel or under travel. Self-leveling shall, within its zone, be automatic and independent of the operating device. The car shall be maintained approximately level with the landing irrespective of its load.

H. Wiring, Piping, and Oil: Provide all necessary hoistway wiring in accordance with the National Electrical Code. All necessary code compliant pipe and fittings shall be provided to connect the power unit to the jack unit. theoiltype

I. Pit moisture/water sensor located approximately 1 foot above the pit floor to be provided. Once activated, elevator will perform “flooded pit operation”, which will run the car up to the designated floor, cycle the doors and shut down and trip the circuit breaker shunt to remove 3 phase power from all equipment, including pit equipment.

J. Motorized oil line shut-off valve shall be provided that can be remotely operated from the controller landing service panel. Also a means for manual operation at the valve in the pit is required.

2.04 POWER UNIT

A. Power Unit (Oil Pumping and Control Mechanism): A self-contained unit located in the elevator pit consisting of the following items:

1. NEMA 4/Sealed Oil reservoir with tank cover including vapor removing tank breather

2. An oil hydraulic pump.
3. An electric motor.
4. Electronic oil control valve with the following components built into single housing; high pressure relief valve, check valve, automatic unloading up start valve, lowering and leveling valve, and electro-magnetic controlling solenoids.

B. Pump: Positive displacement type pump specifically manufactured for oil-hydraulic elevator service. Pump shall be designed for steady discharge with minimum pulsation to give smooth and quiet operation. Output of pump shall not vary more than 10 percent between no load and full load on the elevator car.

C. Motor: Standard manufacture motor specifically designed for oil-hydraulic elevator service. Duty rating – motors shall be capable of 80 starts per hour with a 30% motor run time during each start.

D. Oil Control Unit: The following components shall be built into a single housing. Welded manifolds with separate valves to accomplish each function are not acceptable. Adjustments shall be accessible and be made without removing the assembly from the oil line.

1. Relief valve shall be adjustable and be capable of bypassing the total oil flow without increasing back pressure more than 10 percent above that required to barely open the valve.
2. Up start and stop valve shall be adjustable and designed to bypass oil flow during start and stop of motor pump assembly. Valve shall close slowly, gradually diverting oil to or from the jack unit, ensuring smooth up starts and up stops.
3. Check valve shall be designed to close quietly without permitting any perceptible reverse flow.
4. Lowering valve and leveling valve shall be adjustable for down start speed, lowering speed, leveling speed and stopping speed to ensure smooth "down" starts and stops. The leveling valve shall be designed to level the car to the floor in the direction the car is traveling after slowdown is initiated.
5. Provided with constant speed regulation in both up and down direction. Feature to compensate for load changes, oil temperature, and viscosity changes.
6. Solid State Starting: Provide an electronic starter featuring adjustable starting currents.
7. A secondary hydraulic power source (powered by 110VAC single phase) must be provided. This is required to be able to raise (reposition) the elevator in the event of a system component failure (i.e. pump motor, starter, etc.)
8. Oil Type: USDA certified biobased product, ultra low toxicity, readily biodegradable, energy efficient, high performing fluid made from canola oil with antioxidant, anticorrosive, antifoaming, and metal-passivating additives. Especially formulated for operating in environmentally sensitive areas. USDA certified biobased product, >90% bio-based content, per ASTM D6866

2.05 HOISTWAY ENTRANCES

A. Doors and Frames: Provide complete hollow metal type hoistway entrances at each hoistway opening bolted\knock down construction.

1. Manufacturer's standard entrance design consisting of hangers, doors, hanger supports, hanger covers, fascia plates (where required), sight guards, and necessary hardware.
2. Main landing door & frame finish: ASTM A1008 steel panels, factory applied powder coat finish.
3. Typical door & frame finish: ASTM A 366 steel panels, factory applied powder coat finish.

B. Integrated Control System: the elevator controller to be mounted to hoistway entrance above 1st landing. The entrance at this level, shall be designed to accommodate the control system and provide a means of access to critical electrical components and troubleshooting features. See section 2.09 Control System for additional requirements.

C. At the controller landing, the hoistway entrance frame shall have space to accommodate and provide a lockable means of access (group 2 security) to a 3 phase circuit breaker. See section 2.11 Miscellaneous Elevator Components for further details

D. Interlocks: Equip each hoistway entrance with an approved type interlock tested as required by code. Provide door restriction devices as required by code.

E. Door Hanger and Tracks: Provide sheave type two point suspension hangers and tracks for each hoistway horizontal sliding door.

1. Sheaves: Polyurethane tires with ball bearings properly sealed to retain grease.
2. Hangers: Provide an adjustable device beneath the track to limit the up-thrust of the doors during operation.
3. Tracks: Drawn steel shapes, smooth surface and shaped to conform to the hanger sheaves.

F. Hoistway Sills: Extruded metal, with groove(s) in top surface. Provide mill finish on aluminum.

2.06 PASSENGER ELEVATOR CAR ENCLOSURE

A. Car Enclosure:

1. Walls: Cab type a laminate wall design, durable wood core finished on both sides with high pressure plastic laminate.
2. Reveals and frieze: Not applicable
3. Canopy: Cold-rolled steel with hinged exit.
4. Ceiling: Suspended type, LED lighting with translucent diffuser mounted in a metal frame. Framework shall be finished with a factory applied powder coat finish.

5. Cab Fronts, Return, Transom, Soffit and Strike: Provide panels faced with No. 4 brushed stainless steel
6. Doors: Horizontal sliding car doors reinforced with steel for panel rigidity. Hang doors on sheave type hangers with polyurethane tires that roll on a polished steel track and are guided at the bottom by non-metallic sliding guides.
   a. Door Finish: Stainless steel panels: No. 4 brushed finish.
   b. Cab Sills: Extruded aluminum, mill finish.
7. Handrail: Provide 2" flat metal bar on side and rear walls on front opening cars and side walls only on front and rear opening cars. Handrails shall have a stainless steel, No. 4 brushed finish.
8. Ventilation: Manufacturer's standard exhaust fan, mounted on the car top.
9. Protection pads and buttons: Provide one set of vinyl protection pads with metal grommets for the project. Provide pad buttons on cab front(s) and walls.

B. Car Top Inspection: Provide a car top inspection station with an "Auto-Inspection" switch, an "emergency stop" switch, and constant pressure "up and down" direction and safety buttons to make the normal operating devices inoperative. The station shall give the inspector complete control of the elevator. The car top inspection station shall be mounted in the door operator assembly.

2.07 DOOR OPERATION

A. Door Operation: Provide a direct or alternating current motor driven heavy duty operator designed to operate the car and hoistway doors simultaneously. The door control system shall be digital closed loop and the closed loop circuit shall give constant feedback on the position and velocity of the elevator door. The motor torque shall be constantly adjusted to maintain the correct door speed based on its position and load. All adjustments and setup shall be through the computer based service tool. Door movements shall follow a field programmable speed pattern with smooth acceleration and deceleration at the ends of travel. The mechanical door operating mechanism shall be arranged for manual operation in event of power failure. Doors shall automatically open when the car arrives at the landing and automatically close after an adjustable time interval or when the car is dispatched to another landing. AC controlled units with oil checks, or other deviations are not acceptable.

1. No Un-Necessary Door Operation: The car door shall open only if the car is stopping for a car or hall call, answering a car or hall call at the present position or selected as a dispatch car.
2. Door Open Time Saver: If a car is stopping in response to a car call assignment only (no coincident hall call), the current door hold open time is changed to a shorter field programmable time when the electronic door protection device is activated.
3. Double Door Operation: When a car stops at a landing with concurrent up and down hall calls, no car calls, and no other hall call assignments, the car door opens to answer the hall call in the direction of the car's current travel. If an onward car call is not registered

before the door closes to within 6 inches of fully closed, the travel shall reverse and the door shall reopen to answer the other call.

4. Nudging Operation: The doors shall remain open as long as the electronic detector senses the presence of a passenger or object in the door opening. If door closing is prevented for a field programmable time, a buzzer shall sound. When the obstruction is removed, the door shall begin to close at reduced speed. If the infra-red door protection system detects a person or object while closing on nudging, the doors shall stop and resume closing only after the obstruction has been removed.
5. Door Reversal: If the doors are closing and the infra-red beam(s) is interrupted, the doors shall reverse and reopen. After the obstruction is cleared, the doors shall begin to close.
6. Door Open Watchdog: If the doors are opening, but do not fully open after a field adjustable time, the doors shall recycle closed then attempt to open six times to try and correct the fault.
7. Door Close Watchdog: If the doors are closing, but do not fully close after a field adjustable time, the doors shall recycle open then attempt to close six times to try and correct the fault.
8. Door Close Assist: When the doors have failed to fully close and are in the recycle mode, the door drive motor shall have increased torque applied to possibly overcome mechanical resistance or differential air pressure and allow the door to close.

B. Door Protection Device: Provide a door protection system using microprocessor controlled infra-red light beams. The beams shall project across the car opening detecting the presence of a passenger or object. If door movement is obstructed, the doors shall immediately reopen.

2.08 CAR OPERATING STATION

A. Car Operating Station, General: The main car control in each car shall contain the devices required for specific operation mounted in an integral swing return panel requiring no applied faceplate. Wrap return shall have a No. 4 brushed stainless steel finish. The main car operating panel shall be mounted in the return and comply with handicap requirements. Pushbuttons that illuminate using long lasting LED’s shall be included for each floor served, and emergency buttons and switches shall be provided per code. Switches for car light and accessories shall be provided.

B. Emergency Communications System: Integral phone system provided.

C. Auxiliary Operating Panel: Not Required

D. Column Mounted Car Riding Lantern: A car riding lantern shall be installed in the elevator cab and located in the entrance. The lantern, when illuminated, will indicate the intended direction of travel. The lantern will illuminate and a signal will sound when the car arrives at a floor where it will stop. The lantern shall remain illuminated until the door(s) begin to close.

E. Special Equipment: Not Applicable

2.09 CONTROL SYSTEMS

A. Controller: Shall be integrated in a hoistway entrance jamb. Should be microprocessor based, software oriented and protected from environmental extremes and excessive vibrations in a NEMA 1 enclosure. Control of the elevator shall be automatic in operation by means of push buttons in the car numbered to correspond to floors served, for registering car stops, and by "up-down" push buttons at each intermediate landing and "call" push buttons at terminal landings.

B. Service Panel – to be located outside the hoistway in the controller entrance jamb and shall provide the following functionality/features:

1. Access to main control board and CPU
2. Main controller diagnostics
3. Main controller fuses
4. Universal Interface Tool (UIT)
5. Remote valve adjustment
6. Electronic motor starter adjustment and diagnostics
7. Operation of pit motorized shut-off valve with LED feedback to the state of the valve in the pit
8. Operation of auxiliary pump/motor (secondary hydraulic power source)
9. Operation of electrical assisted manual lowering
10. Provide male plug to supply 110VAC into the controller
11. Run/Stop button

C. Automatic Light and Fan shut down: The control system shall evaluate the system activity and automatically turn off the cab lighting and ventilation fan during periods of inactivity. The settings shall be field programmable.

D. Emergency Power Operation: (Battery Lowering 10-DOC) When the loss of normal power is detected, a battery lowering feature is to be activated. The elevator will lower to a predetermined level and open the doors. After passengers have exited the car, the doors will close and the car will shutdown. When normal power becomes available, the elevator will automatically resume operation. The battery lowering feature is included in the elevator contract and does not utilize a building-supplied standby power source.

E. Special Operation: Not Applicable

2.10 HALL STATIONS

A. Hall Stations, General: Buttons shall illuminate to indicate call has been registered at that floor for the indicated direction.

1. Provide one pushbutton riser with faceplates having a No. 4 brushed stainless steel finish.
   a. Phase 1 firefighter's service key switch, with instructions, shall be incorporated into the hall station at the designated level.

B. Floor Identification Pads: Provide door jamb pads at each floor. Jamb pads shall comply with Americans with Disabilities Act (ADA) requirements.

C. Hall Position Indicator: Not Applicable

D. Hall lanterns: Not Applicable

E. Special Equipment: Not Applicable

2.11 MISCELLANEOUS ELEVATOR COMPONENTS

A. Oil Hydraulic Silencer: Install multiple oil hydraulic silencers (muffler device) at the power unit location. The silencers shall contain pulsation absorbing material inserted in a blowout proof housing.

B. Lockable three phase circuit breaker with auxiliary contact with shunt trip capability to be provided. Circuit breaker to be located behind locked panel (Group 2 security access) at controller landing entrance jamb and should be sized according to the National Electrical Code.

C. Lockable single phase 110V circuit breaker for cab light and fan to be provided. Circuit breaker to be located behind locked panel (Group 2 security access) at controller landing entrance jamb should be sized according to the National Electrical Code

PART 3 EXECUTION

3.01 EXAMINATION

A. Before starting elevator installation, inspect hoistway, hoistway openings, pits and/or control room, as constructed, verify all critical dimensions, and examine supporting structures and all other conditions under which elevator work is to be installed. Do not proceed with elevator installation until unsatisfactory conditions have been corrected in a manner acceptable to the installer.

B. Installation constitutes acceptance of existing conditions and responsibility for satisfactory performance.

3.02 INSTALLATION

A. Install elevator systems components and coordinate installation of hoistway wall construction.

1. Work shall be performed by competent elevator installation personnel in accordance with ASME A17.1, manufacturer's installation instructions and approved shop drawings.
2. Comply with the National Electrical Code for electrical work required during installation.

B. Perform work with competent, skilled workmen under the direct control and supervision of the elevator manufacturer's experienced foreman.

C. Supply in ample time for installation by other trades, inserts, anchors, bearing plates, brackets, supports, and bracing including all setting templates and diagrams for placement.

D. Welded construction: Provide welded connections for installation of elevator work where bolted connections are not required for subsequent removal or for normal operation, adjustment, inspection, maintenance, and replacement of worn parts. Comply with AWS standards for workmanship and for qualification of welding operators.

E. Coordination: Coordinate elevator work with the work of other trades, for proper time and sequence to avoid construction delays. Use benchmarks, lines, and levels designated by the Contractor, to ensure dimensional coordination of the work.

F. Install machinery, guides, controls, car and all equipment and accessories to provide a quiet, smoothly operating installation, free from side sway, oscillation or vibration.

G. Alignment: Coordinate installation of hoistway entrances with installation of elevator guide rails for accurate alignment of entrances with cars. Where possible, delay final adjustment of sills and doors until car is operable in shaft. Reduce clearances to minimum safe, workable dimensions at each landing.

H. Erect hoistway sills, headers, and frames before erection of rough walls and doors; erect fascia and toe guards after rough walls finished. Set sill units accurately aligned and slightly above finish floor at landings.

I. Lubricate operating parts of system, where recommended by manufacturer.

3.03 FIELD QUALITY CONTROL

A. Acceptance testing: Upon completion of the elevator installation and before permitting use of elevator, perform acceptance tests as required and recommended by Code and governing regulations or agencies. Perform other tests, if any, as required by governing regulations or agencies.

B. Advise Owner, Contractor, Architect, and governing authorities in advance of dates and times tests are to be performed on the elevator.

3.04 ADJUSTING

A. Make necessary adjustments of operating devices and equipment to ensure elevator operates smoothly and accurately.

3.05 CLEANING

A. Before final acceptance, remove protection from finished surfaces and clean and polish surfaces in accordance with manufacturer's recommendations for type of material and finish provided. Stainless steel shall be cleaned with soap and water and dried with a non-abrasive surface; it shall not be cleaned with bleach-based cleansers.

B. At completion of elevator work, remove tools, equipment, and surplus materials from site. Clean equipment rooms and hoistway. Remove trash and debris.

1. Use environmentally preferable and low VOC emitting cleaners for each application type. Cleaners that contain solvents, pine and/or citrus oils are not permitted.

3.06 PROTECTION

A. At time of Substantial Completion of elevator work, or portion thereof, provide suitable protective coverings, barriers, devices, signs, or other such methods or procedures to protect elevator work from damage or deterioration. Maintain protective measures throughout remainder of construction period.

3.07 DEMONSTRATION

A. Instruct Owner's personnel in proper use, operations, and daily maintenance of elevators. Review emergency provisions, including emergency access and procedures to be followed at time of failure in operation and other building emergencies. Train Owner's personnel in normal procedures to be followed in checking for sources of operational failures or malfunctions.

B. Make a final check of each elevator operation, with Owner's personnel present, immediately before date of substantial completion. Determine that control systems and operating devices are functioning properly.

3.08 ELEVATOR SCHEDULE

A. Elevator Qty. 1

1. Elevator Model: enduraMRL Above-Ground (1-stage)
2. Elevator Type: Hydraulic Machine Room-Less, Passenger
3. Rated Capacity: 2500 lbs.

4. Rated Speed: 100 ft./min.
5. Operation System: TAC32H
6. Travel: 14'-0"
7. Landings: 2 total
8. Openings:
   a. Front: 2
   b. Rear: 0
9. Clear Car Inside: 6' - 8" wide x 4' - 3" deep
10. Cab Height: 8'-0" standard
11. Hoistway Entrance Size: 3' - 6" wide x 7'-0" high
12. Door Type: Single Speed
13. Power Characteristics: 208 volts, 3 Phase, 60 Hz.
14. Seismic Requirements: Zone 1
15. Hoistway Dimensions: 8' - 4" wide x 5' - 9" deep
16. Pit Depth: 5' - 0"
17. Button & Fixture Style: Traditional Signal Fixtures
18. Special Operations: None

3.09 SPECIAL CONDITIONS (Note: Add Special Conditions as Needed)

END OF SECTION 14 24 00

SECTION 31 36 00 – WIRE MESH GABION WALL

PART 1 - GENERAL

1.1 Related Sections

A. Drawings and general provisions of the Contract, including General and Supplementary Conditions and Division 01 Specification Sections, apply to this Section.

1.2 SUMMARY

A. Section includes:

1. Rock-filled wire mesh gabion baskets.

1.3 REFERENCES

A. American Society for Testing and Materials (ASTM)

1. ASTM A975 : “Double-Twisted Hexagonal Mesh Gabions and Revet mattresses”
2. ASTM D7014: “Standard for Assembly and Placement of Double Twisted Wire Mesh Gabions and Revet Mattresses”
3. ASTM A313/A313M, Standard Specification for Stainless Spring Wire.
4. ASTM A764, Standard Specification for Metallic Coated Carbon Steel Wire, Coated at Size and Drawn to Size for Mechanical Springs.
5. Reference ASTM A975 for product standards, D7014 for installation, ASTM A641/A641M for zinc coating and tensile strength, ASTM D792 D2240 D412 D1242 and UL 746B for PVC coating standards, D746 for brittleness, B117 for salt spray, D1499 and G152 for UV exposure

1.4 SUBMITTALs

A. Product Data: For each type of product indicated.

B. Shop Drawings: For gabion units and layout.

1. Indicate locations, types, and number of gabion units.
2. Indicate in-field, top of gabion layout dimensions for each unit location.

C. Samples:

1. Woven Wire Gabion Mesh: Show the full range of materials, finishes, and fasteners for each type of wire mesh product proposed.
2. Rock Fill: Show the full range of rock color, size, and shape.

PART 2 - PRODUCTS

2.1 PRODUCTS

A. Gabion baskets:

1. Basis of Design: Subject to compliance with requirements, provide Galfan® woven wire gabion baskets by Maccaferri, or a comparable product, subject to approval by architect.

B. Stone fill:

1. Basis of Design: Subject to compliance with requirements, provide gray colored rounded river rock by Recom (Midland, TX), or a comparable product, subject to approval by landscape architect.

2.2 MATERIALS

A. Gabion baskets:

1. Wire mesh:
   a. Wire mesh to be uniform hexagonal pattern wire woven in double twist pattern with openings of approximately 80 x 100 mm and fabricated to be non-raveling. Perimeter edges of mesh to be securely selvedged so that joints formed by connecting selvedges are as strong as body of mesh.
   b. Wire to have following dimensions:
      1) Mesh: 3.0 2.70 mm diameter.
      2) Selvedges: 3.40 mm diameter.
      3) Lacing Wire: 2.0 2.20 mm diameter.
   c. Wire: hot dip galvanized conforming to ASTM A975, style 3 coating and PVC coated steel wire. Wire used shall demonstrate a tensile strength of 75,000 psi as per ASTM A856-03, soft temper steel.
   d. Interlocking Overlapping stainless steel ring fasteners: galvanized steel to ASTM A 764, finish 1, class 1, type 3. used for assembly and installation of PVC gabion units shall comply with ASTM A975 section 6.3. Fasteners to be 3.05 mm diameter and overlap approximately 1” when closed properly
2. PVC (polyvinyl chloride) Coating:
   a. Woven wire mesh to be PVC coated and comply with ASTM A975 section 8.2
3. Factory fabricated so that sides, ends, lid and internal diaphragms readily assemble at site into rectangular baskets of sizes required.
4. When length exceeds horizontal width by more than 1 ½ times, provide diaphragms of same mesh as gabion walls to divide basket into equal cells of length not in excess of horizontal width.
5. Basket height and length: as required to achieve layout and details indicated in the Drawings. Baskets may be cut or folded to achieve required dimensions per installation guidelines.

B. Stone fill:

1. Hard, durable, abrasion resistant such that it will not disintegrate from action of wetting and drying, wave action, freezing and thawing cycles.

2. Rock size for use in gabion baskets: At least 85% of the rock particles, by weight, shall be between 4 inches minimum and 8 inches maximum.

PART 3 -- EXECUTION

3.1 INSTALLATION

B. Install gabions to lines and grades as indicated. Ensure that assembled structures form continuous curves as shown on drawings. Gabions installed adjacent concrete to ground surfaces shall match curve continuously as shown on the drawings without gaps or interruptions. Follow manufacturer's instructions in assembling baskets.

C. To shape gabion units to non-standard dimensions, fold back and securely fasten surplus wire mesh inside gabion unit prior to filling. Any reshaped gabions shall follow manufacturer’s instructions for standard assembly, installation, filling, and closing.

D. Install galvanized and PVC coated internal stiffeners in stages so local deformation is not permitted.

3.2 PLACING GABIONS

A. Follow manufacturer's instructions regarding preparation of baskets prior to filling with stone.

1. Place baskets in position prior to filling with stones.
2. Stake gabions as required to maintain the established proper alignment before the rock fill is placed.

B. Join adjacent baskets together with overlapping stainless-steel ring fasteners at a nominal 4” spacing with a maximum distance of 6” apart as required to achieve manufacturer recommended strength.

3.3 FILLING BASKETS

A. Follow manufacturer's instructions and details regarding filling the gabions with stone.

1. On exposed faces of gabions, place stones by hand with flattest surfaces bearing against face mesh to produce satisfactory alignment and appearance.
2. The gabions shall be carefully filled with rock by machine or hand methods to ensure alignment, avoid bulges and provide a compact mass that minimizes voids. Machine placement requires supplementing with hand work to ensure this result.

B. For wire mesh gabions, fill gabion cells in lifts not exceeding 12 inches (300 mm) and connect opposite walls with 2 tie wires or pre-formed stiffeners after each lift. The cells in any row shall not exceed the depth of rock in any adjoining cell by more than 12 inches (300 mm).

C. Provide connectors and fasteners as required by manufacturer during filling operations to preserve the strength and shape of the structure.

D. The last layer of rock shall be uniformly leveled in accordance to manufacturers recommendations 1-1.5 in. above the top edges of the gabions to allow for stone settling.

Lids shall be stretched until they meet the perimeter edges of the front, side and end panels and secured to the sides, ends, and diaphragms with overlapping stainless-steel ring fasteners, as recommended and approved by the gabion basket manufacturer. Coordinate finishing of installation with requirements of precast concrete cap manufacturer and installer.

E. Promptly repair any damage to the wire or coatings during assembly, placement and filling in accordance with the manufacturer's recommendations or completely replace with undamaged gabion baskets.

A. Ensure no wires or fasteners protrude from the gabion faces that could cause harm to people. Repair any compromising faces, edges, or connections to be smooth and free of snags.

3.4 CLEANING

B. Perform cleaning procedures in accordance to gabion manufacturer's recommendations.

C. Clean surfaces of gabion units exposed to view and prepare for installation of precast caps.

D. Clean all dirt, dust, wiring, rock, wires, fasteners and miscellaneous materials from gabion surfaces and adjacent areas.

END OF SECTION 31 36 00

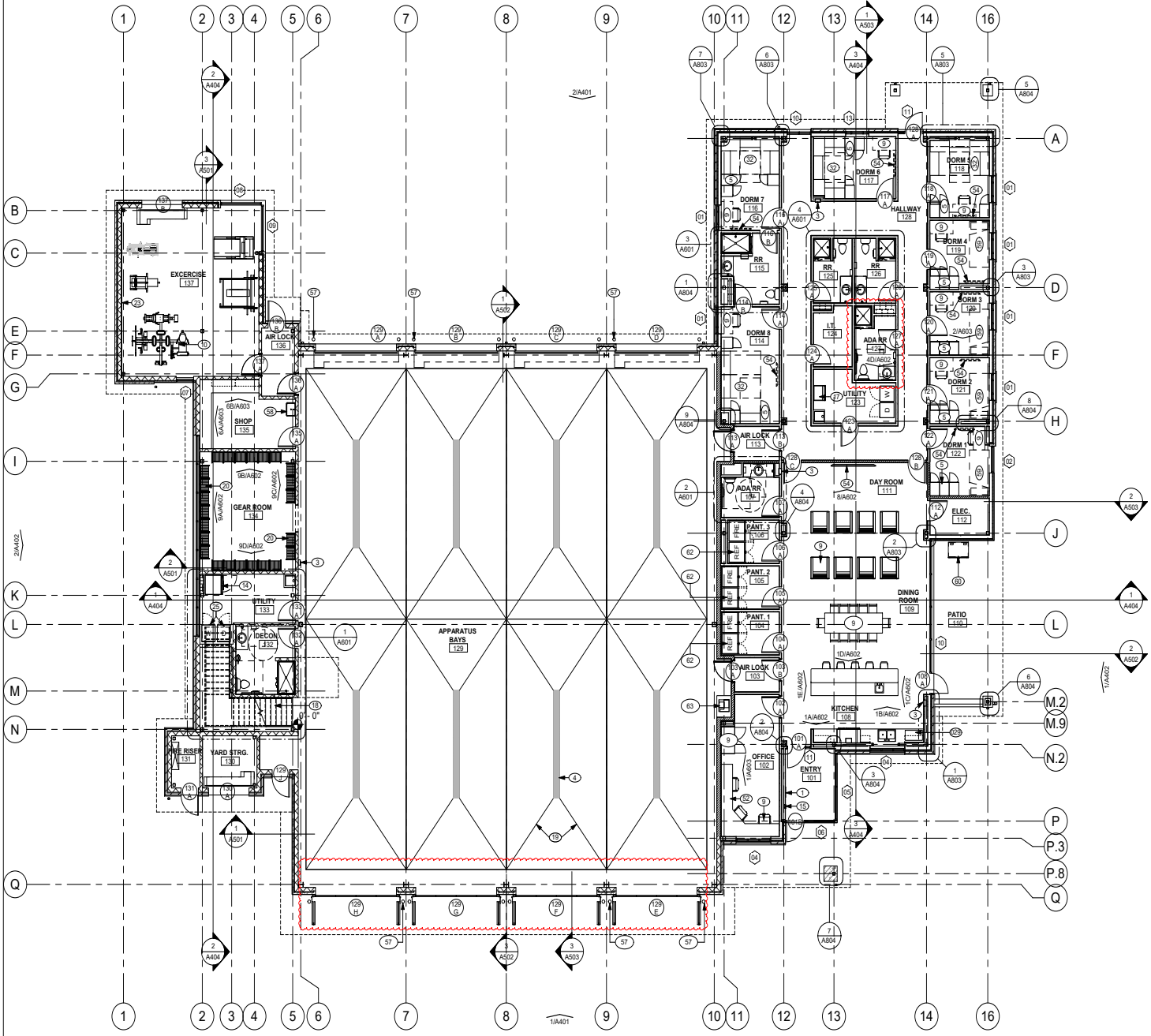

01 LEVEL 1
SCALE: 1/8" = 1'-0"

TRUE NORTH
PROJECT NORTH

GENERAL NOTES

A. SEE SHEET A205 FOR PARTITION TYPES.
B. BRACE ALL STUD WALLS BACK TO STRUCTURE AS REQ'D. STUD MANUFACTURER SHALL GAUGE ALL STUDS PER APPLICATION. SUBMIT ENGINEERED SHOP DRAWINGS FOR APPROVAL.
C. EXTEND & SEAL ALL FIRE RATED WALLS TO DECK. ENSURE AIR-TIGHT SEAL @ ALL EXTERIOR WALLS.
D. COMPLETELY FILL ALL EXTERIOR WALLS WITH INSULATION.
E. CONTRACTOR TO PROVIDE & INSTALL FIRE DEPARTMENT ACCESS BOX. COORDINATE BOX REQUIREMENTS AND MOUNTING LOCATION WITH FIRE MARSHAL PRIOR TO INSTALLATION. APPLICATION & APPROVAL REQ'D.
F. PROVIDE GROMMETS AT ALL CASEWORK KNEE SPACES.
G. ALL MATERIALS TESTING BY OWNER.
H. TESTING AND BALANCING OF MECHANICAL SYSTEMS SHALL BE PART OF BASE BID.
I. ALL BASE CABINET FILE DRAWERS TO BE CONSTRUCTED WITH PROPER WIDTH/DEPTH SO AS TO HOUSE FILING SYSTEM WITH SIDE RAILS TO ACCEPT HANGING FILE SYSTEM. SUBMIT DRAWER MOCKUP FOR ARCHITECT'S REVIEW AND APPROVAL PRIOR TO CONSTRUCTION/ INSTALLATION.
J. SUBSTITUTE DUROCK CEMENT BOARD FOR GYPSUM BOARD @ ALL CERAMIC WALL TILE LOCATIONS.
K. 60" H. PLASTIC CORNER GUARDS TO BE PROVIDED AT ALL GYP. BD. CORNERS EXCEPT THOSE AT COLUMN FURROUTS.
L. CONTRACTOR SHALL COORDINATE THE LOCATION OF ALL ELECTRICAL DEVICES & PLUMBING WITH MILLWORK, LOCKERS, ETC. ALL ELECTRICAL DEVICES & PLUMBING NOT COORDINATED WITH MILLWORK, LOCKERS, ETC. SHALL BE RELOCATED BY THE CONTRACTOR.
M. REFER TO SHEET G001 FOR TYPICAL CLEARANCES AT DOORS. ALL DOORS SHALL MEET THE REQUIREMENTS OF THIS DRAWING. IF A DOOR IS FOUND THAT DOES NOT MEET THESE REQUIREMENTS, CONTACT THE ARCHITECT PRIOR TO CONSTRUCTION.
N. PROVIDE WOOD BLOCKING IN WALLS AS REQUIRED AT ALL HANDRAILS, MILLWORK, EQUIPMENT, ETC. - VERIFY LOCATION OF ALL OWNER PROVIDED EQUIPMENT THAT WILL REQUIRE BLOCKING.
O. SLOPE AT FLOOR DRAINS SHALL NOT EXCEED 1:48 SLOPE IN AREAS OF ACCESSIBLE PATH OF TRAVEL.

WALL LEGEND

1-HR FIRE RATED WALL TO DECK - SEALED: RE TO G002

FLOOR PLAN KEYED NOTES

1 DEDICATION PLAQUE - RE 4/A905
3 FIRE EXTINGUISHER IN CABINET AT DRYWALL LOCATIONS, AND SURFACE MOUNTED AT CMU LOCATIONS
5 1-TIER P-LAM STORAGE LOCKERS (TYP. OF (3) @ EA. DORM ROOM)
9 FURNISHINGS BY OWNER
10 EXERCISE EQUIPMENT BY OWNER
14 65 LB UNIMAC EXTRACTOR BY OWNER VENDOR
15 CALLBOX SHALL PERMIT CALLING THE STATION PHONE OR DIALING 9-1-1
17 ICE MACHINE BY OWNER G.C. TO INSTALL
18 STEEL STAIR w/ CONCRETE TREADS
19 SLOPED CONC. FLOOR RE: STRUCT
20 WALL MOUNTED FULL-HEIGHT GEARGRID LOCKERS (24)
23 4' HIGH X FULL LENGTH WALL MIRROR @ 30" A.F.F.
25 RESIDENTIAL WASHER/ DRYER BY OWNER G.C. INSTALL
029 MICROWAVE. RE: ELEC.
32 WALL MOUNTED MURPHY BED (3 IN ROOM) (O.F.C.I.). CONTRACTOR TO VERIFY SIZE REQUIREMENTS OF BED w/ OWNER PRIOR TO INSTALLATION.
52 BUILT-IN-DESK, SEE ELEVATIONS
54 TV BY OWNER (PROVIDE BLOCKING). COORDINATE TV MOUNT REQUIREMENTS WITH OWNER OR PROVIDE SOLID PLYWOOD SHEATHING BLOCKING"
57 CONCRETE-FILLED STEEL PIPE BOLLARDS - RE: 6/A102
58 SERVICE SINK (RE: PLUMBING)
59 TWIN LX BED WITH UNDER-BED STORAGE
60 GAS GRILL (O.F.C.I.). PROVIDE NATURAL GAS LINE HOOK-UP
62 REFRIGERATOR AND FREEZER BY OWNER.
63 PRINTER AND TABLE BY OWNER.

PROFESSIONAL SEAL
REGISTERED ARCHITECT JUSTIN E. MARTINEZ 24640 STATE OF TEXAS
16 JAN, 2020

LOGO/CONTACT
martinez ARCHITECTURE
Martinez Architect, LP
900 Rockmead, Suite 250
Houston, Texas 77339
281.346.7371

DESIGN TEAM
Architectural
Martinez Architects
Civil Engineer
Maverick Engineering
Structural
Matrix Structural engineers
M/E/P/T
DBR
Landscape Architect
KDC Associates

FIRE STATION #11
CITY OF MIDLAND
6600 BRIARWOOD AVE
MIDLAND, TX 79707

PROJECT No: MA 18017
DATE: 16-JAN-2020

ISSUE
100% DESIGN DEVELOPMENT 22-MAY-2019
75% CONSTRUCTION DOCUMENT 26-JUN-2019
100% ISSUE FOR PERMIT 30-JUL-2019
100% ISSUE FOR BIDDING 30-JAN-2020

LEVEL 1 - FIRE STATION

A201

4.1519

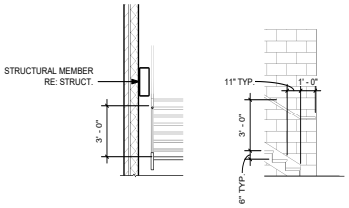

6 STAIR DETAILS
SCALE: 1/4" = 1'-0"

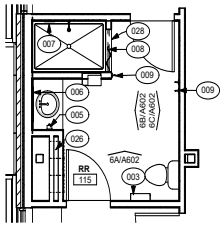

3 RESTROOM 115
SCALE: 1/4" = 1'-0"

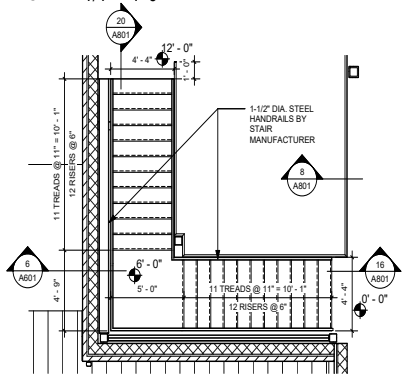

5 STAIR
SCALE: 1/4" = 1'-0"

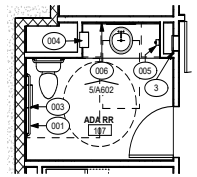

2 RESTROOM 107
SCALE: 1/4" = 1'-0"

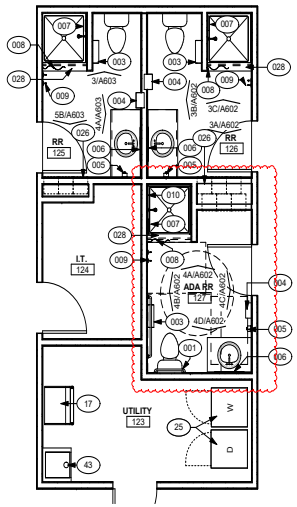

4 UTILITY/RESTROOM CORE
SCALE: 1/4" = 1'-0"

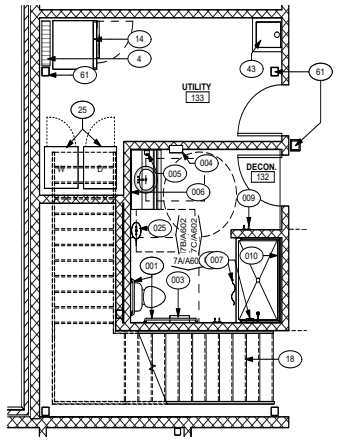

1 UTILITY/DECON
SCALE: 1/4" = 1'-0"

TRUE NORTH
PROJECT NORTH
N

ENLARGED PLAN GENERAL NOTES

A. INSTALL CURBS AT NON-ACCESSIBLE SHOWERS.
B. INSTALL ALL PLUMBING ACCESS PANELS NOT TO CONFLICT W/ TOILET ACCESSORIES.
C. COORDINATE ALL TOILET ACCESSORIES AND INSTALLATION w/ ARCHITECT/OWNER. ALL ACCESSORIES TO HAVE TUMBLER LATCH KNOB (NO KEYED LOCKS)
D. SHEET G001 FOR TYPICAL ACCESSIBLE DIMENSIONS & MOUNTING HEIGHTS.

ENLARGED FLOOR PLAN KEYED NOTES (#)

001	36" & 42" GRAB BARS w/ SLIP-RESISTANT SURFACE
3	FIRE EXTINGUISHER IN CABINET AT DRYWALL LOCATIONS, AND SURFACE MOUNTED AT CMU LOCATIONS
003	TOILET PAPER DISPENSER (MOUNT @ 19" A.F.F.)
4	TRENCH DRAIN (RE: PLUMBING)
004	RECESSED PAPER TOWEL DISPENSER/RECEPTACLE
005	WALL-MOUNTED LIQUID SOAP DISPENSER
006	MIRROR - 24"W x 36"H
007	RECESSED SHOWER SHELF
008	SHOWER CURTAIN, ROD & HOOKS
009	TWO CLOTHING HOOKS
010	CONTINUOUS SHOWER GRAB BAR w/ SLIP-RESISTANT SURFACE
14	65 LB UNIMAC EXTRACTOR BY OWNER VENDOR
17	ICE MACHINE BY OWNER G.C. TO INSTALL
18	STEEL STAIR w/ CONCRETE TREADS
25	RESIDENTIAL WASHER/ DRYER BY OWNER G.C. INSTALL
025	SHOWER / EYEWASH RE: PLUMB
026	BUILT-IN P-LAM STORAGE CABINETS
028	CONCRETE CURB
43	MOP SINK, RE: PLUMBING
61	PAINT STRUCTURAL COLUMNS. (TYP.)

PROFESSIONAL SEAL

REGISTERED ARCHITECT
JUSTIN E. MARTINEZ
24640
STATE OF TEXAS
JAN. 16, 2020

LOGO/CONTACT

martinez ARCHITECTS

Martinez Architect, LP
900 Rockmead, Suite 250
Houston, Texas 77339
281.346.7371

DESIGN TEAM

Architectural
Martinez Architects

Civil Engineer
Maverick Engineering

Structural
Matrix Structural engineers

M/E/P/T
DBR

Landscape Architect
KDC Associates

FIRE STATION #11

CITY OF MIDLAND
6600 BRIARWOOD AVE
MIDLAND, TX 79707

PROJECT No: MA 18017
DATE: 16-JAN-2020

ISSUE

100% DESIGN DEVELOPMENT 22-MAY-2019
75% CONSTRUCTION DOCUMENT 26-JUN-2019
100% ISSUE FOR PERMIT 30-JUL-2019
100% ISSUE FOR BIDDING 30-JAN-2020

ENLARGED FLOOR PLANS

A601

4.1520

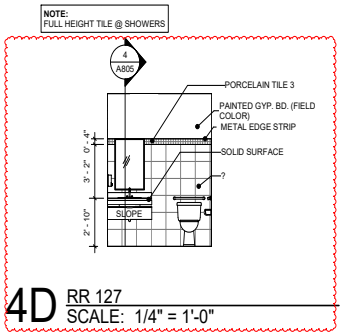

4D RR 127
SCALE: 1/4" = 1'-0"

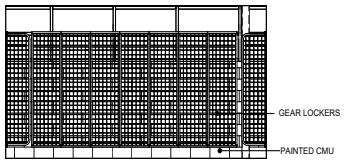

9A GEAR ROOM 134
SCALE: 1/4" = 1'-0"

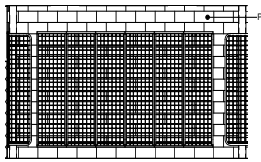

9B GEAR ROOM 134
SCALE: 1/4" = 1'-0"

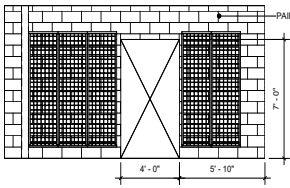

9C GEAR ROOM 134
SCALE: 1/4" = 1'-0"

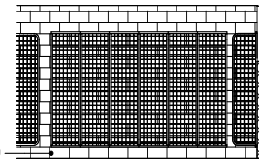

9D GEAR ROOM 134
SCALE: 1/4" = 1'-0"

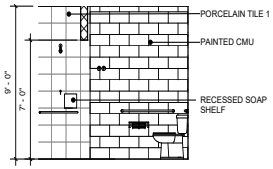

7A DECON 132
SCALE: 1/4" = 1'-0"

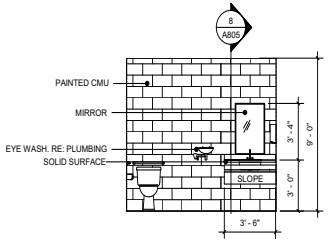

7B DECON 132
SCALE: 1/4" = 1'-0"

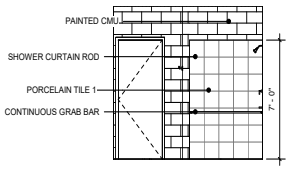

7C DECON 132
SCALE: 1/4" = 1'-0"

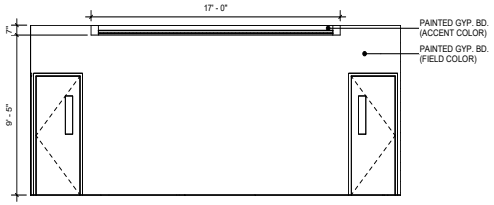

8 DAY ROOM
SCALE: 1/4" = 1'-0"

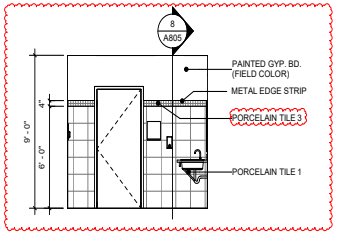

4C RESTROOM 127
SCALE: 1/4" = 1'-0"

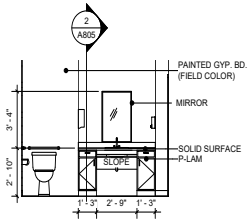

5 RESTROOM 107
SCALE: 1/4" = 1'-0"

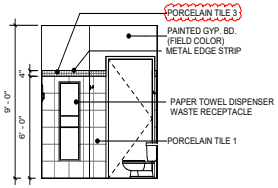

6A RESTROOM 115
SCALE: 1/4" = 1'-0"

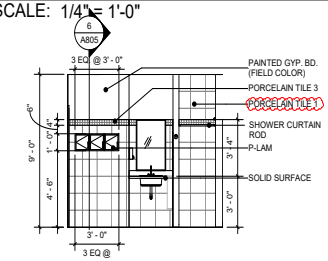

6B RESTROOM 115
SCALE: 1/4" = 1'-0"

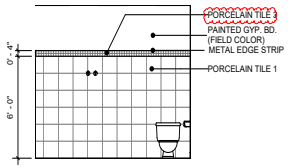

6C RESTROOM 115
SCALE: 1/4" = 1'-0"

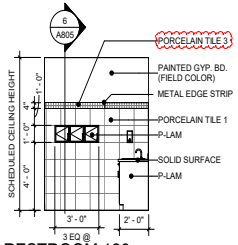

3A RESTROOM 126
SCALE: 1/4" = 1'-0"

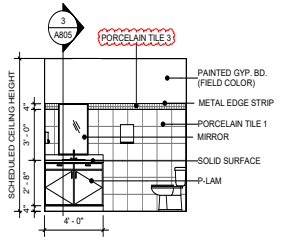

3B RESTROOM 126
SCALE: 1/4" = 1'-0"

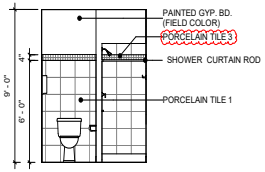

3C RESTROOM 126
SCALE: 1/4" = 1'-0"

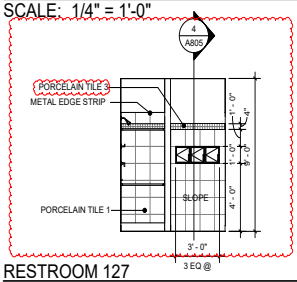

4A RESTROOM 127
SCALE: 1/4" = 1'-0"

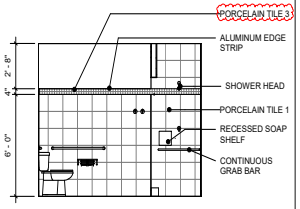

4B RESTROOM 127
SCALE: 1/4" = 1'-0"

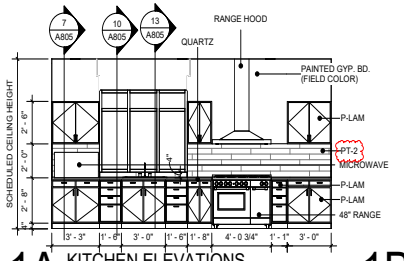

1A KITCHEN ELEVATIONS
SCALE: 1/4" = 1'-0"

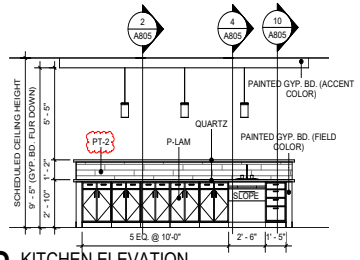

1B KITCHEN ELEVATION
SCALE: 1/4" = 1'-0"

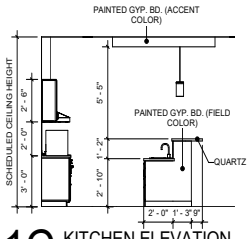

1C KITCHEN ELEVATION
SCALE: 1/4" = 1'-0"

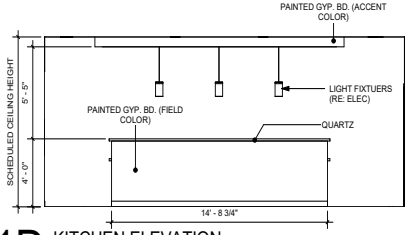

1D KITCHEN ELEVATION
SCALE: 1/4" = 1'-0"

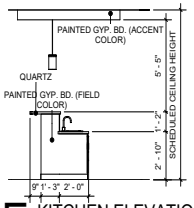

1E KITCHEN ELEVATION
SCALE: 1/4" = 1'-0"

4.1521

PROFESSIONAL SEAL

REGISTERED ARCHITECT
JUSTIN E. MARTINEZ
24640
STATE OF TEXAS
JAN. 16, 2020

LOGO/CONTACT

martinez ARCHITECTS

Martinez Architect, LP
900 Rockmead, Suite 250
Houston, Texas 77339
281.346.7371

DESIGN TEAM

Architectural
Martinez Architects

Civil Engineer
Maverick Engineering

Structural
Matrix Structural engineers

M/E/P/T
DBR

Landscape Architect
KDC Associates

FIRE STATION #11

CITY OF MIDLAND
6600 BRIARWOOD AVE
MIDLAND, TX 79707

PROJECT No: MA 18017
DATE: 16-JAN-2020

ISSUE

100% DESIGN DEVELOPMENT
22-MAY-2019

75% CONSTRUCTION DOCUMENT
26-JUN-2019

100% ISSUE FOR PERMIT
30-JUL-2019

100% ISSUE FOR BIDDING
30-JAN-2020

INTERIOR ELEVATIONS

A602

WALL FINISH LEGEND

PORCELAIN TILE-1
MARAZZI, MODERN OASIS
SOFT CLOUD, 12"X24"

PORCELAIN TILE-2 (PT-2)
DALTILE, EMERSON WOOD
ASH WHITE EP06,
3D CUBE MOSAIC

PAINTED GYP. BD.
SHERWIN WILLIAMS
SW 7005, Pure White

PORCELAIN TILE-3
MARAZZI, MODERN OASIS
DESERT SAND, 2"X2"

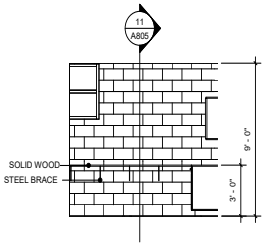

6A SHOP 135
SCALE: 1/4" = 1'-0"

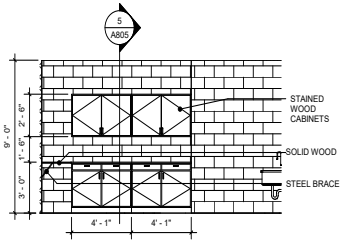

6B SHOP 135
SCALE: 1/4" = 1'-0"

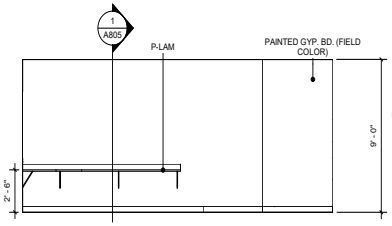

1 OFFICE 1
SCALE: 1/4" = 1'-0"

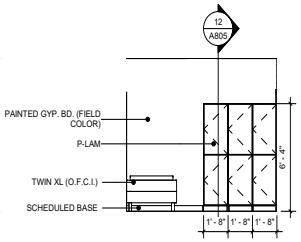

2 DORM 3
SCALE: 1/4" = 1'-0"

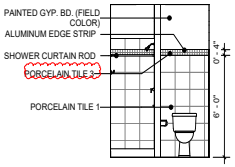

3 RESTROOM 125
SCALE: 1/4" = 1'-0"

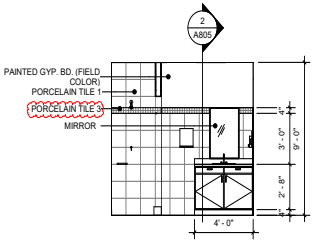

4A RESTROOM 125
SCALE: 1/4" = 1'-0"

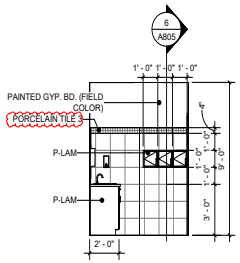

5B RESTROOM 125
SCALE: 1/4" = 1'-0"

4.1522

PROFESSIONAL SEAL

REGISTERED ARCHITECT
JUSTIN E. MYERS
24640
STATE OF TEXAS
JAN. 16, 2020

LOGO/CONTACT

martinez ARCHITECTS

Martinez Architect, LP
900 Rockmead, Suite 250
Houston, Texas 77339
281.346.7371

DESIGN TEAM

Architectural
Martinez Architects

Civil Engineer
Maverick Engineering

Structural
Matrix Structural engineers

M/E/P/T
DBR

Landscape Architect
KDC Associates

FIRE STATION #11

CITY OF MIDLAND
6600 BRIARWOOD AVE
MIDLAND, TX 79707

PROJECT No: **MA 18017**
DATE: **16-JAN-2020**

ISSUE

100% DESIGN DEVELOPMENT
22-MAY-2019

75% CONSTRUCTION DOCUMENT
26-JUN-2019

100% ISSUE FOR PERMIT
30-JUL-2019

100% ISSUE FOR BIDDING
30-JAN-2020

INTERIOR ELEVATIONS

A603

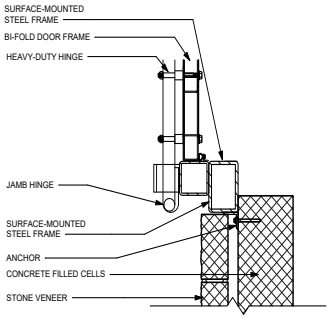

2 FOUD-FOLD DOOR / JAMB
SCALE: 1 1/2" = 1'-0"

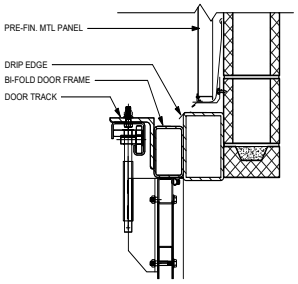

1 FOUR-FOLD DOOR / HEAD
SCALE: 1 1/2" = 1'-0"

PROFESSIONAL SEAL

REGISTERED ARCHITECT
JUSTIN E. MARTINEZ
24640
STATE OF TEXAS
JAN. 16, 2020

LOGO/CONTACT

martinez ARCHITECTS

Martinez Architect, LP
900 Rockmead, Suite 250
Houston, Texas 77339
281.346.7371

DESIGN TEAM

Architectural
Martinez Architects

Civil Engineer
Maverick Engineering

Structural
Matrix Structural engineers

M/E/P/T
DBR

Landscape Architect
KDC Associates

FIRE STATION #11

CITY OF MIDLAND
6600 BRIARWOOD AVE
MIDLAND, TX 79707

PROJECT No: **MA 18017**
DATE: **16-JAN-2020**

ISSUE

100% DESIGN DEVELOPMENT 22-MAY-2019
75% CONSTRUCTION DOCUMENT 26-JUN-2019
100% ISSUE FOR PERMIT 30-JUL-2019
100% ISSUE FOR BIDDING 30-JAN-2020

DETAILS

A802

FINISH SCHEDULE - BASE BID

#	ROOM NAME	FLOOR: POLISHED CONCRETE (REFER TO SPECIFICATION 03 66 00)	FLOOR: PORCELAIN TILE - 1	FLOOR: LUXURY VINYL TILE - 01	FLOOR: SEALED CONCRETE	FLOOR: RUBBER ATHLETIC FLOORING	BASE: VULCANIZED RUBBER COVER BASE	BASE: PORCALAIN TILE COVE BASE	WALL: PAINT ON GYP. BD (FIELD COLOR)	WALL: PAINT ON GYP. BD. (ACCENT COLOR)	WALL: PAINT ON WATER RESISTANT FIRE RATED PLYWOOD	WALL: PORCELAIN WALL TILE (FIELD)	WALL: PORCELAIN MOSAIC WALL TILE (ACCENT PT-2)	WALL: FIBER-REINFORCED PLASTIC	WALL: PAINT ON CMU (FIELD COLOR)	CEILING FINISH: TEGULAR EDGED LAY-IN ACOUSTICAL PANEL (WHITE)	CEILING FINISH: SQUARE EDGED LAY-IN SCRUBBABLE CERAMIC ACOUSTICAL PANEL (WHITE)	CEILING FINISH: PAINTED GYPSUM BOARD	CEILING FINISH: PAINTED EXPOSED STRUCTURE & MEP	HEIGHT	FINISH REMARKS
101	ENTRY			•			•		•										•	9' - 0"	
102	OFFICE			•			•		•							•				9' - 0"	
103	AIR LOCK			•			•		•							•				9' - 0"	
104	PANT. 1			•			•		•							•				9' - 0"	
105	PANT. 2			•			•		•							•				9' - 0"	
106	PANT. 3			•			•		•							•				9' - 0"	
107	ADA RR		•				•		•								•			9' - 0"	
108	KITCHEN			•			•		•				•			•	•	•		10' - 0"	RE: A701 FOR CLOUD HEIGHT & MATERIAL
109	DINING ROOM			•			•		•							•		•		10' - 0"	
110	PATIO				•															9' - 0"	METAL SOFFIT MANELS. RE: A/701
111	DAY ROOM			•			•		•	•						•		•		10' - 0"	RE: A701 FOR CLOUD HEIGHT & MATERIAL
112	ELEC.				•		•				•					•				9' - 0"	
113	AIR LOCK			•			•		•							•				9' - 0"	
114	DORM 8			•			•		•							•				9' - 0"	
115	RR		•					•				•	•				•	•		9' - 0"	
116	DORM 7			•			•		•							•				9' - 0"	
117	DORM 6			•			•		•							•				9' - 0"	
118	DORM 5			•			•		•							•				9' - 0"	
119	DORM 4			•			•		•							•				9' - 0"	
120	DORM 3			•			•		•							•				9' - 0"	
121	DORM 2			•			•		•							•				9' - 0"	
122	DORM 1			•			•		•							•				9' - 0"	
123	UTILITY			•			•		•							•				9' - 0"	
124	I.T.			•			•				•					•				9' - 0"	
125	RR		•					•				•	•				•	•		9' - 0"	
126	RR		•					•				•	•				•	•		9' - 0"	
127	ADA RR		•					•				•	•				•	•		9' - 0"	
128	HALLWAY			•			•		•							•				9' - 0"	
129	APPARATUS BAYS	•													•				•	-	
130	YARD STRG.				•										•			•		9' - 6"	
131	FIRE RISER				•										•				•	-	
132	DECON.	•													•		•			9' - 0"	
133	UTILITY	•													•	•				9' - 0"	
134	GEAR ROOM	•													•	•				9' - 0"	
135	SHOP	•													•	•				9' - 0"	
136	AIR LOCK	•													•	•				9' - 0"	
137	EXCERCISE					•									•	•				10' - 0"	
201	MEZZANINE				•										•				•	-	

FINISH SCHEDULE - ADD ALTERNATE #2

140	WASH BAY	•																	•	-	
141	CHEMICAL STORAGE	•																	•	-	

NOTES

1. All finish material colors/patterns/styles to be determined by architect from manufacturer's full range of colors. All hollow metal door frames shall be painted.
2. RE: Specifications for additional finish information & requirements.
3. All exposed steel framing (interior & exterior) shall be painted.
4. Provide corner guards at all outside gyp. bd. corners
5. All cabinets shall be plastic laminate over solid wood, U.N.O.
6. RE: A701 for extent and height of ceiling furrdowns / transitions.
7. No wall base at interior masonry walls

PROFESSIONAL SEAL

REGISTERED ARCHITECT JUSTIN E. MYERS 24640 STATE OF TEXAS
JAN. 16, 2020

LOGO/CONTACT

martinez ARCHITECTS

Martinez Architect, LP
900 Rockmead, Suite 250
Houston, Texas 77339
281.346.7371

DESIGN TEAM

Architectural
Martinez Architects

Civil Engineer
Maverick Engineering

Structural
Matrix Structural engineers

M/E/P/T
DBR

Landscape Architect
KDC Associates

FIRE STATION #11

CITY OF MIDLAND
6600 BRIARWOOD AVE
MIDLAND, TX 79707

PROJECT No: **MA 18017**
DATE: **16-JAN-2020**

ISSUE

100% DESIGN DEVELOPMENT
22-MAY-2019

75% CONSTRUCTION DOCUMENT
26-JUN-2019

100% ISSUE FOR PERMIT
30-JUL-2019

100% ISSUE FOR BIDDING
30-JAN-2020

FINISH SCHEDULE

A901

4.1524

NOTES:
TILE FLOOR FINISHES TO BE INSTALLED TO ROOM EXTENT (UNDER MILLWORK)

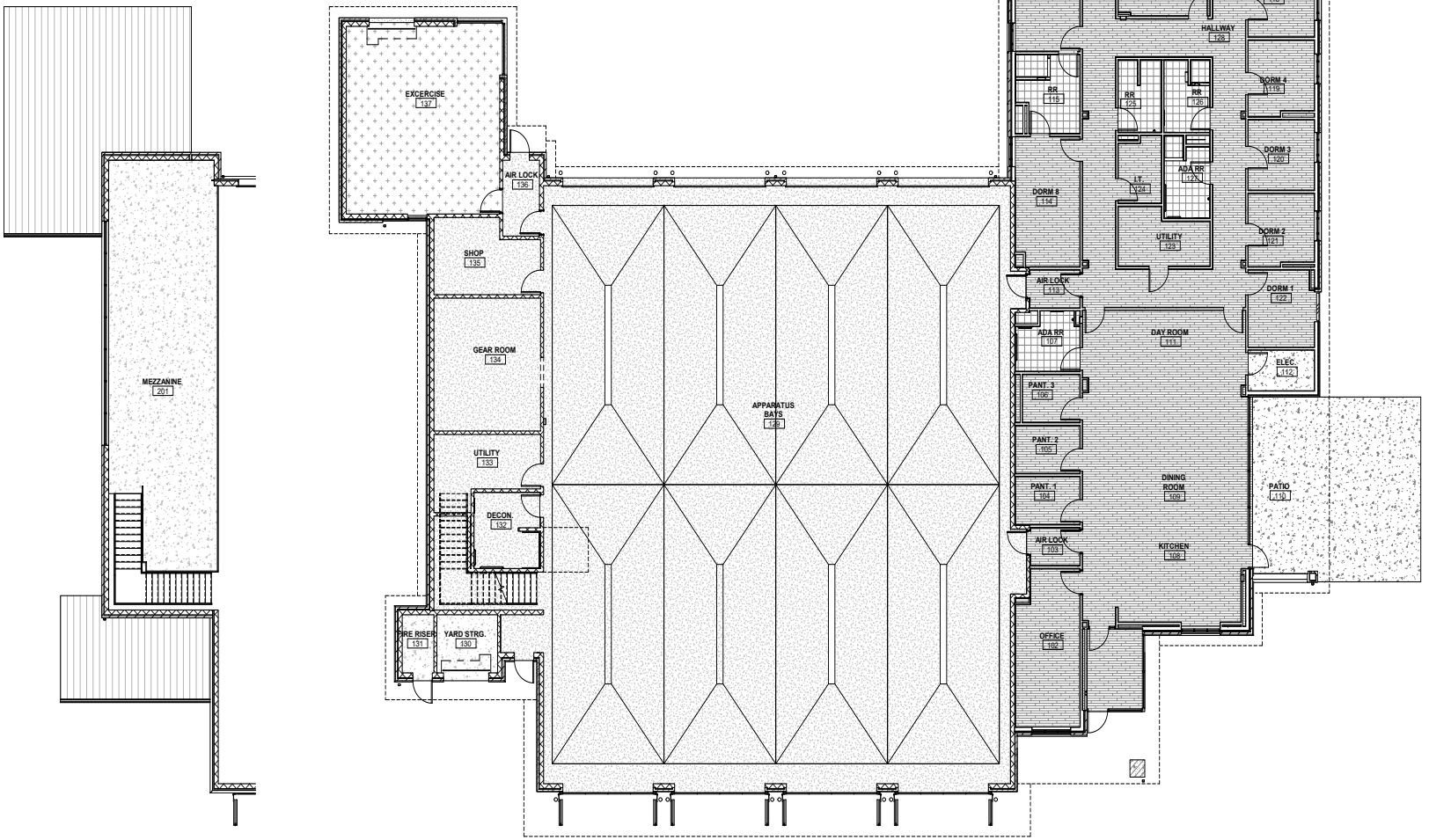

FLOOR FINISH LEGEND

LVT-01 EVENT - CLASSIC PLANK ECK 3321 AMERICAN OAK 3321 6" X 36"	**PORCELAIN TILE - 1** Cyrose - HONEY MAPLE CY32 6" X 48"	SEALED CONCRETE (SC-1)
RUBBER ATHLETIC FLOORING	PORCELAIN TILE (FT-2)	POLISHED CONCRETE (REFER TO SPECIFICATION 03 66 00)

TRUE NORTH PROJECT NORTH

2 MEZZANINE - FINISH PLAN
SCALE: 1/8" = 1'-0"

1 LEVEL 1 - FINISH PLAN
SCALE: 1/8" = 1'-0"

PROFESSIONAL SEAL
REGISTERED ARCHITECT JUSTIN E. MARTINEZ 24640 STATE OF TEXAS
JAN. 16, 2020

LOGO/CONTACT

martinez ARCHITECTS
Martinez Architect, LP
900 Rockmead, Suite 250
Houston, Texas 77339
281.346.7371

DESIGN TEAM

Architectural
Martinez Architects

Civil Engineer
Maverick Engineering

Structural
Matrix Structural engineers

M/E/P/T
DBR

Landscape Architect
KDC Associates

FIRE STATION #11

CITY OF MIDLAND
6600 BRIARWOOD AVE
MIDLAND, TX 79707

PROJECT No: MA 18017
DATE: 16-JAN-2020

ISSUE
100% DESIGN DEVELOPMENT 22-MAY-2019
75% CONSTRUCTION DOCUMENT 26-JUN-2019
100% ISSUE FOR PERMIT 30-JUL-2019
100% ISSUE FOR BIDDING 30-JAN-2020

LEVEL 1 FINISH PLAN

A903

4.1525

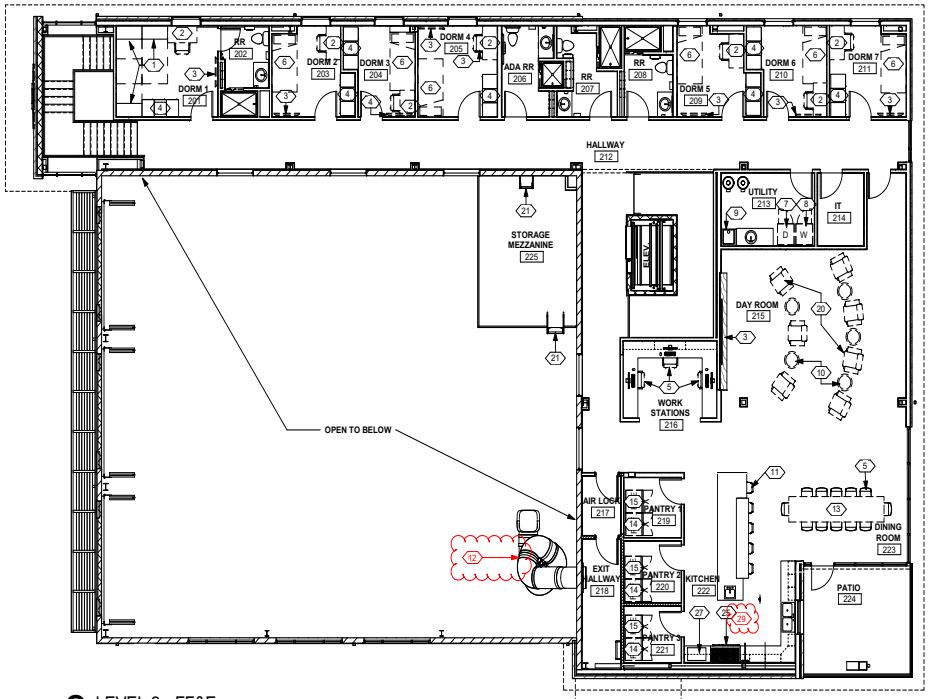

2 LEVEL 2 - FF&E
SCALE: 1/8" = 1'-0"

LINE OF FLOOR ABOVE

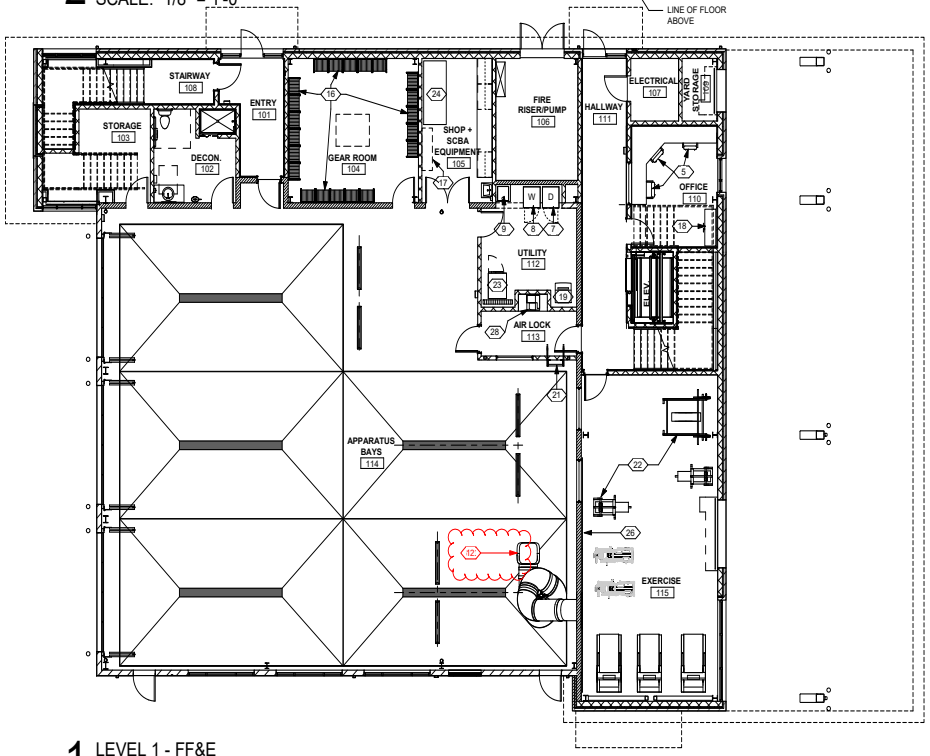

1 LEVEL 1 - FF&E
SCALE: 1/8" = 1'-0"

FIRE STATION #5 EQUIPMENT SCHEDULE

KEY NOTE	ITEM	FURNISHED BY	INSTALLED BY	NOTES
1	MURPHY BED OWNER ~~CONTRACTOR~~	~~CONTRACTOR~~ OWNER		
2	TABLE/CHAIR	OWNER	OWNER	
3	TELEVISION	OWNER	OWNER	CONTRACTOR PROVIDE BLOCKING
4	1-TIER ~~2-TIER~~ LOCKER OWNER ~~CONTRACTOR~~	~~CONTRACTOR~~ OWNER		
5	CHAIR	OWNER	OWNER	
6	TWIN XL BED	OWNER	OWNER	
7	DRYER	OWNER	CONTRACTOR	
8	WASHING MACHINE	OWNER	CONTRACTOR	
9	MOP SINK	CONTRACTOR	CONTRACTOR	
10	COFFEE TABLE	OWNER	~~CONTRACTOR~~ OWNER	
11	BAR STOOL	OWNER	OWNER	
12	SLIDE CONTRACTOR ~~OWNER~~	CONTRACTOR		SEE REMARK #1 BELOW
13	TABLE	OWNER	OWNER	
14	REFRIGERATOR	OWNER	CONTRACTOR	
15	FREEZER	OWNER	CONTRACTOR	
16	GEAR GRID LOCKER	CONTRACTOR	CONTRACTOR	
17	SCBA TANK STORAGE RACK	OWNER	~~CONTRACTOR~~ OWNER	
18	STORAGE CABINET	OWNER	~~CONTRACTOR~~ OWNER	
19	ICE MACHINE OWNER ~~CONTRACTOR~~	~~CONTRACTOR~~ OWNER		
20	RECLINER	OWNER	~~CONTRACTOR~~ OWNER	
21	FIXED LADDER	CONTRACTOR	CONTRACTOR	
22	EXERCISE EQUIPMENT	OWNER	OWNER	
23	EXTRACTOR	OWNER	~~CONTRACTOR~~ OWNER	
24	AIR COMPRESSOR	OWNER	~~CONTRACTOR~~ OWNER	
25	RANGE/ ~~HOOD~~ OVEN	~~CONTRACTOR~~ OWNER	CONTRACTOR	
26	WALL MIRROR	CONTRACTOR	CONTRACTOR	
27	MICROWAVE	OWNER	OWNER	
28	PRINTER	OWNER	OWNER	
29	RANGE HOOD	CONTRACTOR	CONTRACTOR	

SCHEDULE REMARKS

1) APPROVED SLIDE MANUFACTURERS & PRODUCTS:

A) DESIGN # KS3629-A BY SWINGSETMALL.COM (BASIS OF DESIGN)
DESCRIPTION: 30" DIAMETER, 14' DECK HEIGHT, CUSTOM SPIRAL TUBE SLIDE, SURFACE-MOUNTED SUPPORTS

B) APPROVED EQUIVALENT (APPROVED BY ARCHITECT DURING BIDDING)

PROFESSIONAL SEAL

REGISTERED ARCHITECT JUSTIN E. MYERS 24840 STATE OF TEXAS

LOGO/CONTACT

martinez ARCHITECTS

Martinez Architect, LP
900 Rockmead, Suite 250
Houston, Texas 77339
281.346.7371

DESIGN TEAM

Architectural
Martinez Architects

Civil Engineer
Maverick Engineering

Structural
Matrix Structural Engineers

M/E/P/T
DBR

Landscape Architect
KDC Associates

FIRE STATION #5
CITY OF MIDLAND
2210 W GOLF COURSE RD
MIDLAND, TX 79701

PROJECT No: **MA 18017**
DATE: **16-JAN-2020**

ISSUE
75% CONSTRUCTION DOCUMENT
26-JUN-2019
100% ISSUE FOR PERMIT
30-JUL-2019
100% ISSUE FOR APPROVAL TO BID
16-JAN-2020

EQUIPMENT SCHEDULE

A 906

4.1526

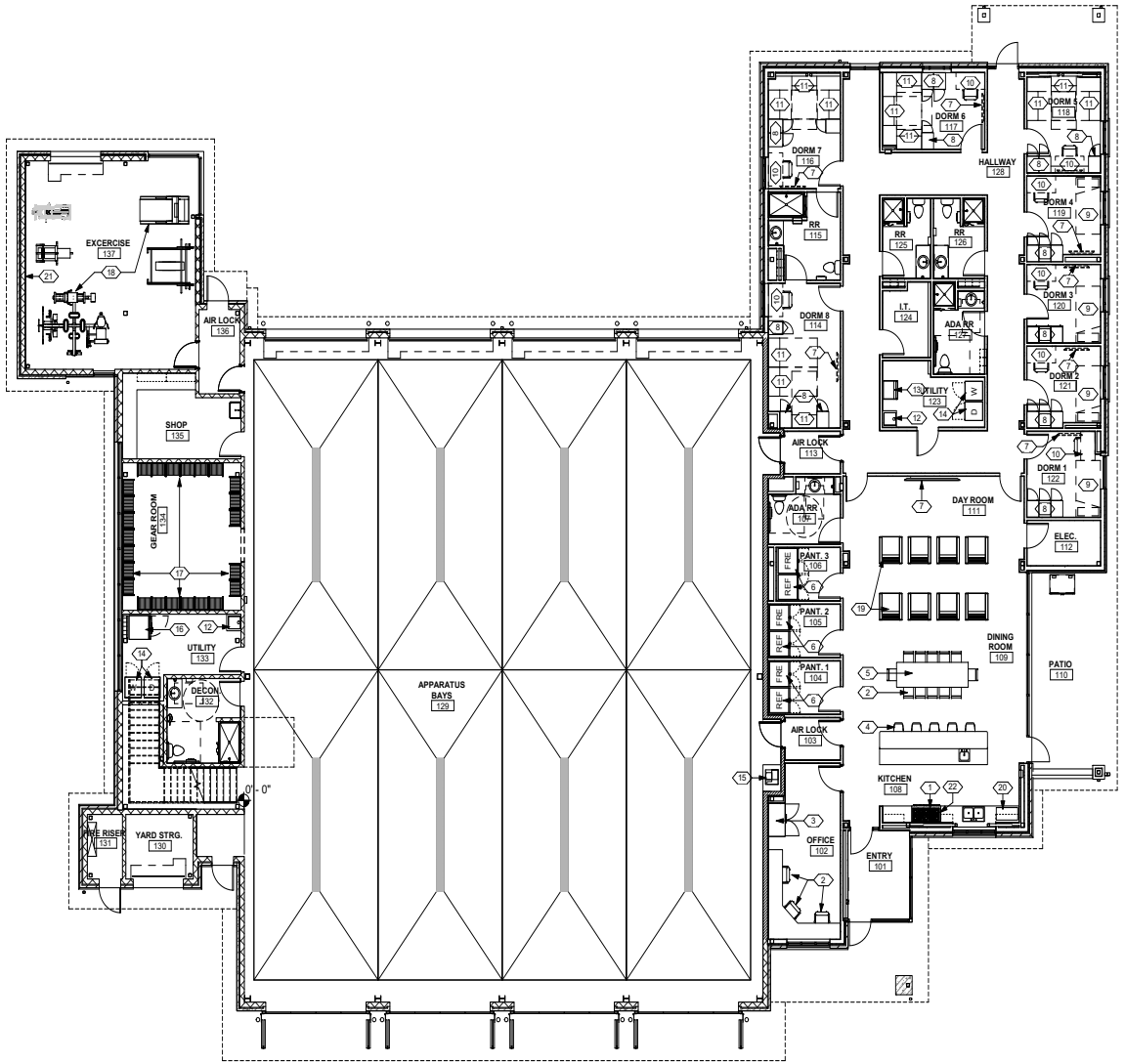

1 LEVEL 1 - FF&E
SCALE: 1/8" = 1'-0"

FIRE STATION #11 EQUIPMENT SCHEDULE

KEY NOTE	ITEM	FURNISHED BY	INSTALLED BY	NOTES
1	RANGE/OVEN	OWNER	CONTRACTOR	
2	CHAIR	OWNER	OWNER	
3	STORAGE CABINET	OWNER	OWNER	
4	BAR STOOL	OWNER	OWNER	
5	TABLE	OWNER	OWNER	
6	REFRIGERATOR/ FREEZER	OWNER	CONTRACTOR	
7	TELEVISION	OWNER	OWNER	CONTRACTOR PROVIDE BLOCKING
8	1-TIER LOCKER	~~OWNER~~ CONTRACTOR	~~CONTRACTOR~~ CONTRACTOR	~~OWNER~~ OWNER
9	TWIN XL BED	OWNER	OWNER	
10	TABLE/ CHAIR	OWNER	OWNER	
11	MURPHY BED	~~OWNER~~ CONTRACTOR	~~CONTRACTOR~~ CONTRACTOR	~~OWNER~~ OWNER
12	MOP SINK	CONTRACTOR	CONTRACTOR	
13	ICE MACHINE	~~OWNER~~ CONTRACTOR	~~CONTRACTOR~~ CONTRACTOR	~~OWNER~~ OWNER
14	WASHER/ DRYER	OWNER	CONTRACTOR	
15	PRINTER	OWNER	OWNER	
16	EXTRACTOR	OWNER	OWNER VENDOR	
17	GEAR GRID LOCKER	CONTRACTOR	CONTRACTOR	
18	EXERCISE EQUIPMENT	OWNER	OWNER	
19	RECLINER	OWNER	OWNER	
20	MICROWAVE	OWNER	OWNER	
21	WALL MIRROR	CONTRACTOR	CONTRACTOR	
22	HOOD	CONTRACTOR	CONTRACTOR	

PROFESSIONAL SEAL

REGISTERED ARCHITECT JUSTIN E. MARTINEZ 24640 STATE OF TEXAS
JAN. 16, 2020

LOGO/CONTACT

martinez ARCHITECTS

Martinez Architect, LP
900 Rockmead, Suite 250
Houston, Texas 77339
281.346.7371

DESIGN TEAM

Architectural
Martinez Architects

Civil Engineer
Maverick Engineering

Structural
Matrix Structural engineers

ME/P/T
DBR

Landscape Architect
KDC Associates

FIRE STATION #11

CITY OF MIDLAND
6600 BRIARWOOD AVE
MIDLAND, TX 79707

PROJECT No: **MA 18017**
DATE: **16-JAN-2020**

ISSUE
100% DESIGN DEVELOPMENT 22-MAY-2019
75% CONSTRUCTION DOCUMENT 26-JUN-2019
100% ISSUE FOR PERMIT 30-JUL-2019
100% ISSUE FOR BIDDING 30-JAN-2020

EQUIPMENT SCHEDULE

A906

4.1527

ELEVATOR SUBMITTAL PACKAGE

Date Submitted: **FEBRUARY 12, 2020**

For Project:

MIDLAND FIRE STATION NO 5

TKE Job Number: **1103-2225-01A**

PRELIMINARY DRAWINGS

Elevator(s): **1 (SIMPLEX)**

FOR APPROVAL

Located At:

2210 W GOLF COURSE ROAD
MIDLAND, TX 79701

Company (Mail To):

--[N/A]--

--[N/A]--

--[N/A]--

GC Phone:

Attention:

--[N/A]--

4.1528

ineering.tomorrow.together.

thyssenkrupp

INSTRUCTIONS

Failure to complete the Contractor Verification Sheet and Approve drawings WILL result in delay of fabrication and shipping of equipment.

☐ Check ALL hoistway dimensions, elevator travel (floor to floor heights), pit depth, clear over-head, machine room dimensions and entrance wall thickness. Mark-up drawings accordingly, and remit with necessary approval (i.e: approved or approved as noted) to the Local ThyssenKrupp Elevator Office.

☐ Complete all information on the Contractor Verification Sheet.

☐ Provide a firm on-site date to the Local ThyssenKrupp Representative.

Any previously quoted manufacturing lead-times for material delivery, shall begin the date of receipt by ThyssenKrupp of ALL approvals, confirmations, and a fully executed subcontract agreement. The installation start date cannot be any earlier than the delivery of the material to the site and the completion of all items shown on the Pre-Installation Checklist sent to you in this submittal package.

INFORMATION

"ALL DEPICTIONS, DIMENSIONS, MEASUREMENTS AND ALL OTHER INFORMATION CONTAINED IN THESE DRAWINGS ARE FOR ILLUSTRATION PURPOSES ONLY. THE CONSTRUCTION MANAGER AND/OR GENERAL CONTRACTOR BEARS FULL RESPONSIBILITY TO PROPERLY BUILD THE NECESSARY HOISTWAYS, CONTROL-ROOMS, AND/OR MACHINE-ROOMS TO ACCOMMODATE THE ELEVATOR EQUIPMENT PURCHASED." IN NO EVENT WILL THYSSENKRUPP ELEVATOR CORPORATION BE LIABLE FOR ANY INCIDENTAL, CONSEQUENTIAL, OR INDIRECT DAMAGES (INCLUDING BUT NOT LIMITED TO, DAMAGES FOR LOSS OF PROFITS, DELAY, BUSINESS INTERRUPTION,) ARISING OUT OF THE USE OF THESE DRAWINGS, THE INABILITY TO USE THESE DRAWINGS (INCLUDING ANY INFORMATION CONTAINED THEREIN), OR ANY TRANSACTIONS RELATED TO THE USE OF THESE DRAWINGS. BECAUSE SOME STATES DO NOT ALLOW THE EXCLUSION OR LIMITATION OF LIABILITY FOR CONSEQUENTIAL OR INCIDENTAL DAMAGES, THE ABOVE LIMITATION MAY NOT APPLY TO YOU. IN SUCH STATES, THYSSENKRUPP ELEVATOR CORPORATION'S LIABILITY IS LIMITED TO THE GREATEST EXTENT PERMITTED BY LAW.

REMITTANCE INFORMATION:

PLEASE REMIT ELECTRONIC COPY OF ALL CONFIRMATIONS AND APPROVALS TO:

TO: MEGAN SHAW

EMAIL:

PHONE: 432-683-1488

CONTACT INFORMATION:

Sales Representative:	**MEGAN SHAW**	432-683-1488	
Construction Superintendent:	**CHAD PASCHALL**	432-683-1488	
Project Manager:	**MEGAN SHAW**	432-683-1488	

General Contractor Owner Job-Site Pre-Installation Checklist (See G.C. Site Binder)

PACKAGE CONTENT:

Contractor Verification Sheet

Instruction and Information Sheet

Approval/Approved Sheet

Layout Sheet

Entrance Sheet(s)

- The enclosed submittals are in compliance with conditions of ThyssenKrupp Elevator's subcontract or supplying and installing materials and or systems for the project referenced above.
- Enclosed drawings are for approval purposes only and not to be used for construction.

4.1529

CONTRACTOR VERIFICATION SHEET

ELEVATOR DESIGNATION: **1**

FACTORY JOB NUMBER:

REQUIRED CAB INFORMATION:

CAB WALL COLOR:	<PLASTICLAMINATED>
CAB CEILING FRAME FINISH COLOR:	<POWDERCOATED>

FLOORING TYPE: ☐ **VCT** ☐ **CARPET** ☐ **OTHER, COMPLETE BELOW:**

FLOORING WEIGHT: <FLOORINGWEIGHT> **LBS/SQ.FT**

(WITH 3/8" MAXIMUM FLOOR THICKNESS)

* IF FINISHES ARE NOT FROM TKE COLOR BROCHURE, ADDITIONAL CHARGES WILL APPLY.

DESCRIPTION OF YOUR CAB FEATURES:

CAB TYPE:	FLAT PLASTIC LAMINATE WALLS (TKLP)
CAB CEILING:	SUSPENDED CEILING WITH LED LIGHTING
CAB DOOR:	#4 STAINLESS STEEL
CAR SILLS:	ALUMINUM
CAB HANDRAIL(S):	(1) 1/4" X 2" CONTINUOUS FLAT BAR
HANDRAIL(S) FINISH:	#4 STAINLESS STEEL
CAB PROTECTION:	PAD BUTTONS PROVIDED. (1) PADS
CAB FLOORING:	FINISH FLOOR WEIGHT (3/8" MAX. THICKNESS) = 100 LBS. BY OTHERS

FEATURES FOR YOUR FIXTURES:

PUSH BUTTON ILLUMINATION COLOR:	WHITE

REQUIRED ENTRANCE INFORMATION:

MAIN EGRESS/ FIRE RECALL @ FLOOR MARKED: <MAINEGRESS>

FLOOR MARKING:	WALL TYPE:	WALL THICKNESS (X):	ENTRANCE DOOR FINISH:	ENTRANCE FRAME FINISH:
2	<WALLTYPE>	<WALLTHK>	<POWDERCOAT>	<POWDERCOAT>
1	<WALLTYPE>	<WALLTHK>	<POWDERCOAT>	<POWDERCOAT>

NOTE: FOR COMMON FINISHES SELECT FROM BELOW AND NOTE DIFFERENCES IN TABLE ABOVE

POWDER COAT DOOR COLOR : <POWDERCOATED>

POWDER COAT FRAME COLOR: <POWDERCOATED>

ENTRANCE WALL DETAIL

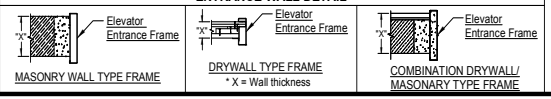

REQUIRED POWER CONFIRMATION:

WE REQUIRE THAT THE FOLLOWING POWER INFORMATION BE CONFIRMED:

BUILDING POWER: **208 VOLTS A.C., 3 PHASE, 60 CYCLES** ☐ CONFIRMED

STARTING TYPE: **SOLID STATE STARTING**

☐ CORRECTED: VOLTS: <VLT> PHASE: <PH> CYCLES: <CYC>

EMERGENCY POWER VERIFICATION:

IS EMERGENCY OPERATION ON BUILDING GENERATOR POWER REQUIRED?

☐ YES ☐ NO

IF YES, HOW MANY ELEVATORS WILL BE CAPABLE OF RUNNING AT THE SAME TIME WHILE ON EMERGENCY POWER ? **<QTYELEV>**

FOR MR AND CR VERSIONS OF CONTROLLERS ELECTRICAL CONTRACTOR MUST PROVIDE:
- AUXILIARY CONTACTS IN THE DISCONNECT.
- IF EMERGENCY POWER IS PROVIDED, THEN EPNP CONTACTS FOR CONTROLLER ARE REQUIRED.

NOTE: IF CONTROLLER IS JAMB MOUNTED THEN THE AUXILIARY CONTACTS ARE INCLUDED WITH THE DISCONNECT IN THE CONTROLLER. SEE LOCAL Thyssenkrupp FIELD REPRESENTATIVE FOR MORE INFORMATION.

MATERIAL RELEASE FORM:

In an effort to meet your expectations concerning schedule for the project, we are requesting material delivery/start dates based on the availability or anticipated completion of the items listed in the thyssenkrupp site binder.

Note: Prior to the delivery of material and the start of installation, all items on the pre start check list inside the thyssenkrupp elevator site binder must be completed.

Requested Elevator Material Delivery/Start Date: <MNT> /<DAY> /<YR>
(Delivery of all remaining material, less any early shipment)

The General Contractor agrees to assume responsibility of the equipment the day of arrival from the factory on date mentioned above. Adequate ingress and egress to this area must also be provided along with a dumpster or area for disposing of packaging material. Any relocation of the equipment as directed by the contractor/owner after its initial delivery will be at others (not thyssenkrupp elevators) expense.

If the site conditions are not in place at the time of elevator delivery, the equipment will be stored per the rates established in the contract and the thyssenkrupp elevator proposal. At such time the site becomes ready for delivery/starting the elevator installation, thyssenkrupp will need payment of any outstanding invoices inclusive of storage costs accrued before delivery/mobilization and in the thyssenkrupp elevator proposal for storage fees.

CUSTOMER APPROVAL BOX
(THESE ITEMS MUST BE CONFIRMED BEFORE THE ELEVATOR WILL BE MANUFACTURED)

NET TRAVEL:	☐ CONFIRMED AS SHOWN ON SECTION VIEW ☐ CORRECTED: <NETTRAVELCORRECTED>	**CLEAR OVERHEAD:**	☐ CONFIRMED AS SHOWN ON SECTION VIEW ☐ CORRECTED: <CLROVERHEADCORRECTED>
PIT DEPTH:	☐ CONFIRMED AS SHOWN ON SECTION VIEW ☐ CORRECTED: <PITDEPTHCORRECTED>	**HOISTWAY SIZE:**	☐ CONFIRMED AS SHOWN ON SECTION VIEW ☐ CORRECTED: <HWYSIZECORRECTED>
HAND OF DOOR:	☐ CONFIRMED AS SHOWN ON SECTION VIEW ☐ CORRECTED: <DOORHANDCORRECTED>	**FIRE SERVICE LOCATION:**	☐ PRIMARY SERVICE AT FLOOR: 1 ☐ ALTERNATE SERVICE AT FLOOR: _____

4.1530

APPROVED BY: <APPROVALSHEETSIGNATURE> **DATE: <APPROVALSHEETDATE>**

FAILURE TO FULLY COMPLETE THIS SHEET MAY RESULT IN DELAY OF SCHEDULE

POWER UNIT INFORMATION			
WIDTH	DEPTH	HEIGHT	WEIGHT W/OIL (LBS)
6'-0 1/2"	1'-10 15/16"	3'-9"	2,710
HYDRAULIC FLUID REQUIRED IN SYSTEM = 103 GALLONS			
HEAT PRODUCED BY ELEVATOR EQUIPMENT IN HOISTWAY = 9398 BTU/HR			

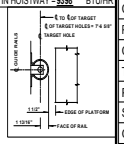

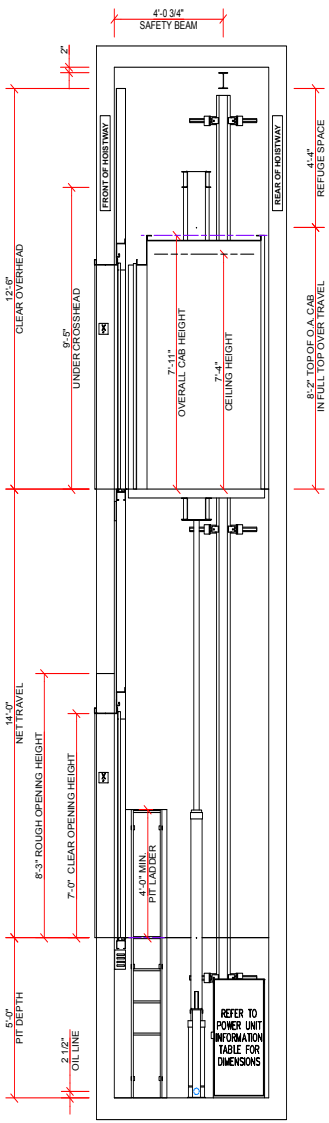

ELEVATION VIEW

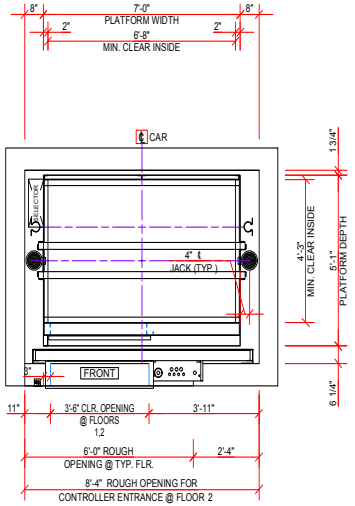

HOISTWAY PLAN

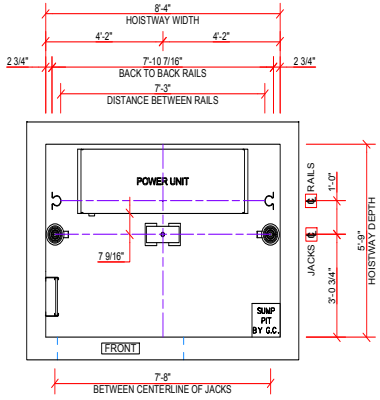

PIT PLAN

POSITION OF SUMP PIT OR DRAIN CANNOT BE RELOCATED

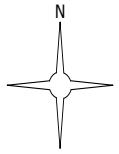

SUMP PIT SIZE TO BE DETERMINED BY GENERAL CONTRACTOR

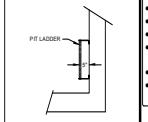

HYDRAULIC ELEVATOR CONTRACT DATA			
TYPE:	endura 25 A	ELEVATOR DESIGNATION:	1
SPEED:	100 FPM UP / 125 FPM DOWN	CAPACITY:	2,500 LBS
CAR ENCLOSURE:	TKLP	DOOR HAND:	LEFT FRONT
PLATFORM THICKNESS:	3 3/8"	FINISHED FLOOR:	BY OTHERS
CAR WEIGHT:	2,300.00 LBS		
TELEPHONE:	BY ELEVATOR COMPANY	PIT LADDER:	BY ELEVATOR COMPANY
POWER UNIT:	EM-80, 20 HP	POWER SUPPLY:	208 V 3 Phase 60 Cycles
STARTING:	SOLID STATE STARTING	OPERATION:	TAC32
GLOJ:	4,800 LBS	GLOPU:	5,029 LBS
OVER TRAVEL:	BOTTOM: 10"	TOP: 3"	
JACK MODEL:	2s2 TWINPOST	PLUNGER WEIGHT:	229.00 LBS
PLUNGER LENGTH:	15'-6 3/4"	CYLINDER LENGTH:	15'-4"
PLUNGER WALL THK:	0.244"	CYLINDER WALL THK:	1/4"
PLUNGER O.D:	3"	CYLINDER O.D:	5 9/16"
NET AREA:	14.020 SQ.IN.	BETWEEN PIT FLOOR & CAR BOLSTER ON COMPRESSED BUFFER:	3'-3 7/8"
BOTTOM CAR RUNBY:	6"		
EST. WORKING PRESS:	395 PSI	CAR BUFFER STROKE:	2 1/2"
(QTY) SPRING(S) #:	(1) 780CB1	TOTAL SPRING(S) CAPACITY:	15,223 LBS
JACK REACTION (EA.):	5,492.00 LBS	CAR BUFFER REACTION:	12,706.00 LBS

CAR FRAME							
	S = 3.27	FORMED	S = 5.67	FORMED	S = 1.38	FORMED
	I = 9.82	CROSSHEAD	I = 23.39	BOLSTER	I = 2.17	STILE
	A = 1.85	7GA x 6" x 2 1/2"	A = 2.40	7GA x 8 1/4" x 2 3/4"	R = 1.01	10GA

RAIL FORCES	F1	F2	SEISMIC RAIL FORCES ZONE:	
OMEGA RAIL	405 LBS	231 LBS	F1 = N/A	F2 = N/A

CAR STATION FEATURES: **Traditional Fixtures, T2 Buttons, Alarm Button, Telephone, Position Indicator**

PUSH BUTTON MARKINGS: **1, 2**

CAR RIDING LANTERN: **Car Operating Panel**

NOTE A: OIL PIPE LINES AND FITTINGS SHALL BE PROPERLY SUPPORTED TO RELIEVE STRAIN.
NOTE B: ALL REACTIONS INCLUDE ALLOWANCE FOR IMPACT.
NOTE C: THYSSENKRUPP ELEVATOR TO BE NOTIFIED OF ANY CHANGE TO ELEVATOR HOISTWAY OR MACHINE ROOM DESIGN.
NOTE D: ELEVATOR DESIGN & FABRICATION BASED ON ESTIMATED CAB WEIGHT SHOWN. LAYOUT APPROVAL WILL BE CONSTRUED AS FINAL CAR WEIGHT, UNLESS OTHERWISE NOTIFIED.

BY OTHERS

THE FOLLOWING CONDITIONS MUST BE MET BEFORE INSTALLATION IS COMPLETED AND ARE NOT INCLUDED IN THE ELEVATOR CONTRACT

ELECTRICAL DATA

- GENERAL CONTRACTOR MUST FORWARD POWER REQUIREMENTS TO THE ELECTRICAL CONTRACTOR.
  NOTE: A FOURTH WIRE OF SAME SIZE AS THREE PHASE WIRES IS REQUIRED FOR GROUNDING PURPOSES TO MINIMIZE ELECTRICAL NOISE INTERFERENCE. THE GROUNDING WIRE MUST BE CONNECTED TO THE BUILDING ELECTRICAL SYSTEM GROUND.
- A MEANS TO AUTOMATICALLY DISCONNECT THE MAIN LINE PER POWER SUPPLY TO THE ELEVATOR PRIOR TO THE APPLICATION OF WATER IN THE ELEVATOR HOISTWAY WILL BE FURNISHED BY THE ELECTRICAL CONTRACTOR THIS MEANS SHALL NOT BE SELF RESETTING.
- DEDICATED 120 VOLT, 15 AMP SERVICE, ALONG WITH TELEPHONE CIRCUIT WHEN REQUIRED TO TERMINALS OF EACH REQUIRED CONTROLLER (AS LOCATED ON ENTRANCE PAGE) FOR THE FOLLOWING: ADA PHONE PROVIDED
  - CAR LIGHT AND ALARM CIRCUIT WITH GFCI PROTECTION PER NEC.
  - GROUP CONTROL WHEN REQUIRED.
  ACCESS TO THESE COMPONENTS WILL BE FROM INSIDE THE HOISTWAY. THIS WILL REQUIRE THYSSENKRUPP ELEVATOR TO BE ON SITE.
  NOTE: IF STANDBY POWER IS SUPPLIED TO ELEVATOR, CAR LIGHT AND ALARM CIRCUIT AND GROUP CONTROL SERVICE MUST BE STANDBY POWER BACKED.
- LIGHTING (MINIMUM 200LUX/19FT. CANDLES) AND SWITCH, CONVENIENCE OUTLETS WITH GFCI PROTECTION PER NEC. LIGHTING IS REQUIRED AT THE PIT LEVEL AND THE CONTROLLER LANDING.
- A LIGHT SWITCH LOCATED 4'-0" ABOVE BOTTOM LANDING NEXT TO THE TOP RUNG OF THE LADDER.
- A LIGHT SWITCH LOCATED 4'-0" ABOVE THE CONTROLLER LANDING FLOOR.
- CONDUIT AND WIRING FROM HOISTWAY TO ELEVATOR MONITORING PANELS BY OTHERS.
- PROVIDE A POWER TRANSFER WARNING CONTACT THAT CLOSES 20 SECONDS PRIOR TO TRANSFER IN EITHER DIRECTION AND IT OPENS WHEN TRANSFER IS COMPLETE.
- TOTAL FULL LOAD UP SPEED AMPS IS BASED ON 100% OF ELEVATOR CAPACITY, THE VALUE NEEDED FOR EMERGENCY POWER SIZING.
- THE HYDRAULIC MOTORS ARE RATED FOR INTERMITTENT DUTY (SEC. 620-13 AND 430-33). BRANCH CIRCUIT CONDUCTORS CAN BE SIZED FOR AN AMPACITY 90% OF THE MOTORS NAMEPLATE RATING AS DETERMINED BY (SEC. 430-22 [E])
- HEAT SENSOR REQUIRED AT CONTROLLER FLOOR TO ACTIVATE SHUNT. HEAT SENSOR IS TO BE LOCATED WITHIN 2'-0" OF THE SPRINKLER HEAD.
- BATTERY OPERATION LOWERING IS PROVIDED. A MECHANICAL AUXILIARY CONTACT SHALL BE INSTALLED ON THE DISC SWITCH FOR EACH CAR. THE AUXILIARY CONTACT SHALL BE CONFIGURED AS SPST AT 1A 110VAC (MIN). THE AUXILIARY CONTACT SHALL BE OPEN WHEN THE DISC SWITCH IS IN THE OPEN POSITION. IF A SHUNT TRIP CIRCUIT BREAKER IS PROVIDED, AN AUXILIARY CONTACT SHALL BE INSTALLED ON THE CIRCUIT BREAKER.

- PRIMARY FIRE SERVICE LOCATED AT FLOOR: 1
- ALTERNATE FIRE SERVICE LOCATION AT FLOOR: _
- BREAKERS AND DISCONNECT PROVIDED BY THYSSENKRUPP ELEVATOR
  150 AMP CIRCUIT BREAKER PROVIDED IN CONTROLLER BY THYSSENKRUPP ELEVATOR.

ELEVATOR DESIGNATOR	POWER SUPPLY	HORSE POWER	STARTING A.C. AMPS	TOTAL FULL LOAD UP SPEED MOTOR A.C. AMPS	RATED A.C. AMPS	SHORT CIRCUIT CURRENT RATINGS (AT 600V OR LESS)
1	208	20	195	95	65.1	10,000 AMPS

GENERAL DATA

- A PLUMB HOISTWAY BUILT ACCORDING TO CODE AND SIZES SHOWN.
- ADEQUATE SUPPORT FOR JACK, GUIDE RAIL BRACKETS, AND BUFFERS (FOR REACTIONS SHOWN)
- HOISTWAY BARRICADES AND ALL CUTTING AND PATCHING TO INSTALL HOISTWAY ENTRANCES, SILLS, HALL FIXTURES, OIL, AND ELECTRIC LINES.
- PIT LADDER PER CAR (ACCORDING TO CODE) NOTE: MUST BE CLEAR OF ALL ELEVATOR EQUIPMENT.
- LEAVE OFF WALL PER ROUGH OPENING DIMENSIONS WHERE ENTRANCE IS INCLUDED. SEE INSTALLATION PROCEDURES FOR FRAME-TO-WALL INTERFACE DETAILS TO ENSURE CONFORMANCE WITH LABELED ENTRANCE INTERFACE CONSTRUCTION. AT CONTROLLER FLOOR, LEAVE OUT ENTIRE WALL. SEE ENTRANCE DRAWING FOR DETAILS. **CONTROLLER @ FLOOR: 2**
- POCKETS IN CORRIDOR WALL FOR HALL FIXTURES. **NOTE:** MUST BE LOCATED AS DIRECTED BY ELEVATOR CONTRACTOR
- SMOKE SENSORS (AS REQUIRED)
- ELEVATOR MEETS ASME A17.1 0 CODE.
- A PROPERLY VENTED HOISTWAY AND MAINTAINED BETWEEN 32°F (0°C) AND 104°F (40°C) WITH NON-CONDENSING HUMIDITY OF 10-95% PER LOCAL BUILDING CODE.
- SUMP PIT OR DRAIN AS REQUIRED BY LOCAL CODE BY GENERAL CONTRACTOR.
- SAFETY BEAM REQUIRED PER OSHA 1926 502 PROVIDED AND INSTALLED BY OTHERS, AS DIRECTED BY THYSSENKRUPP FIELD OFFICE DESIGN LOAD = **5,000 LBS** (STATIC, NOT IMPACT)

4.1531

THIS ING AND ALL INFORMATION THEREON IS THE PROPRIETARY PROPERTY OF THYS RUPP ELEVATOR AND MUST NOT BE MADE PUBLIC OR COPIED. THIS DRAWING IS LO SUBJECT TO RETURN ON DEMAND AND IS NOT TO BE USED DIRECTLY OR INDIRECTLY, IN ANY MANNER DETRIMENTAL TO THE INTEREST OF THYSSENKRUPP ELEVATOR.

FOR: MIDLAND FIRE STATION NO 5

ADDRESS: 2210 W GOLF COURSE ROAD
CITY: MIDLAND, TX 79701

thyssenkrupp

DRAWN	REV	JOB NUMBER	DATE	SHEET
MS	A	1103-2225-01A	2/12/2020	4 OF 7

SECTION2.H]

IF A CUT STARTER RAIL IS CALLED FOR IN THE STACK, CONFIRM THE NUMBER OF SPLICES PRIOR TO CUTTING

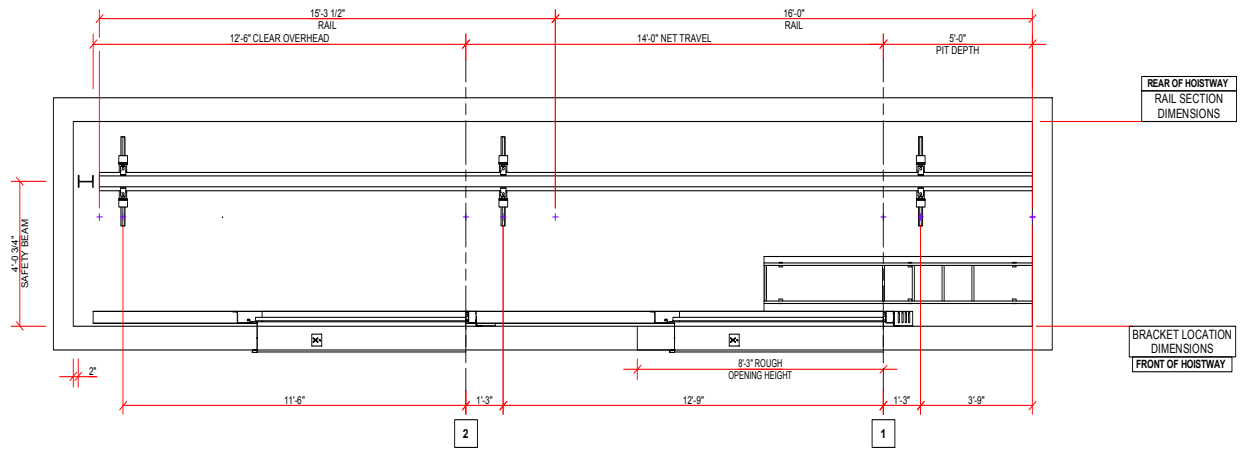

RAIL STACK SECTION VIEW
FOR ELEVATOR: 1

CAR RAIL LINE LENGTH QUANTITY (4)	
LENGTH	QUANTITY
16'-0"	2
15'-3 1/2"	2

FLOOR TO FLOOR TRAVEL	
FLOOR TO FLOOR	TRAVEL
1-2	14'-0"
NET TRAVEL	14'-0"

CAR RAIL LINE BRACKETS AND INSERT LOCATIONS REQ. AT :	
LOCATION	DESCRIPTION
15'-9"	MAX. UNSUPPORTED RAIL BRACKET SPACING
11'-6"	ABOVE TOP FLOOR
1'-3"	BELOW 1-2

RAILS AND BRACKETS - TOTAL QUANTITY		
RAILS:	(4) 16 FT	
SPLICES:	2	
BRACKETS	LEFT HAND	RIGHT HAND
QTY:	3	3
SPAN:	8"	8"

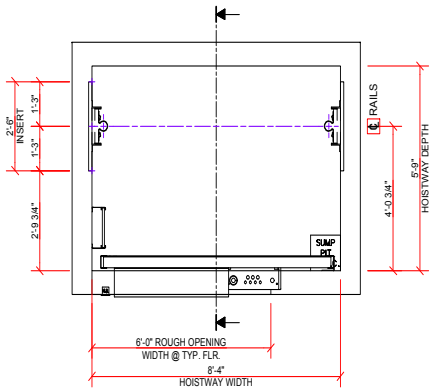

"PLEASE REFERENCE ASME A17.1 (2.2.2) FOR SUMP PIT REQUIREMENTS"
REFER TO SECTION SHEET FOR CONTROLLER ENTRANCE ROUGH OPENING WIDTH

"WHERE DISTANCE BETWEEN FLOORS EXCEEDS THE MAXIMUM BRACKET SPAN, BRACKET SUPPORT MUST BE PROVIDED MIDWAY. BRACKET SUPPORT WILL NEED TO BE SUPPLIED BY OTHERS TO ALLOW FOR RAIL ATTACHMENT. INSIDE SUPPORT SHALL NOT BE RECESSED BEHIND WALL SYSTEM AND SHALL NOT BE PROUD BY [illegible]AN 1/4" AT ANY POINT. COORDINATE WITH TKE SUPPORT/OPERATIONS MANAGER"

TYPICAL SURFACE MOUNTING DETAILS

AT ALL FLOOR LOCATIONS

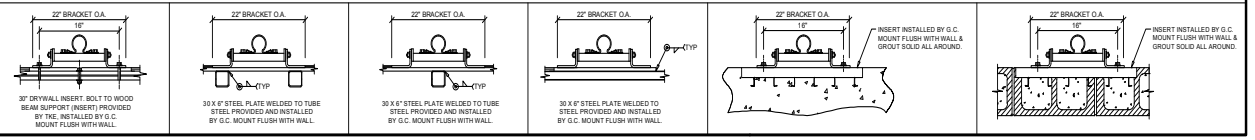

THIS DRAWING AND ALL INFORMATION THEREON IS THE PROPRIETARY PROPERTY OF THYSSENKRUPP ELEVATOR AND MUST NOT BE MADE PUBLIC OR COPIED. THIS DRAWING IS LOANED SUBJECT TO RETURN ON DEMAND AND IS NOT TO BE USED DIRECTLY OR INDIRECTLY, IN ANY MANNER DETRIMENTAL TO THE INTEREST OF THYSSENKRUPP ELEVATOR.

FOR: MIDLAND FIRE STATION NO 5

ADDRESS: 2210 W GOLF COURSE ROAD
CITY: MIDLAND, TX 79701

thyssenkrupp

DRAWN	REV	JOB NUMBER	DATE	SHEET
MS	A	1103-2225-01A	2/12/2020	5 OF 7

4.1532

PLEASE REFERENCE THE RAIL STACK SHEET OF THIS PACKAGE FOR BUILDING LANDING MATRIX

ELEVATOR: 1 **FRONT ENTRANCE SCHEDULE**

FLOOR	ENTRANCE DIMS.	WALL TYPE	WALL SIZE	
			ACTUAL	OA. FRAME "B" DIM.
2	7'-0" H X 3'-6" W	TBD	TBD	TBD
1	7'-0" H X 3'-6" W	TBD	TBD	TBD

FOR ELEVATOR: 1

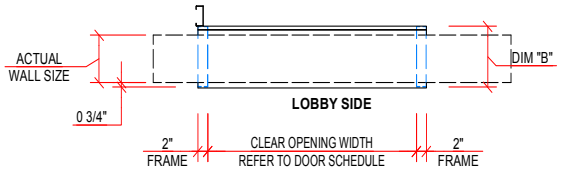

ENTRANCE PLAN VIEW

TOTAL WEIGHT	ELEVATOR 1	ELEVATOR
CAB AND HALL DOORS	327 LBS	

FEATURES OF YOUR ENTRANCES		
FEATURES	FINISH	LOCATION
DOOR OPEN STRUT BUMPERS:	PROVIDED	@1,2
KICKPLATES:	————	@1,2
BINDERS:	————	@1,2
SILL FINISH:	ALUMINUM	@1,2

FEATURES OF ENTRANCES	DATA
SILL MAXIMUM WHEEL LOADS	625 LBS
KEYHOLES TO BE	INCLUDED
THIS FRAME HAS A WARNOCK HERSEY LABEL OF	2 HOURS
DUST COVERS	NOT INCLUDED

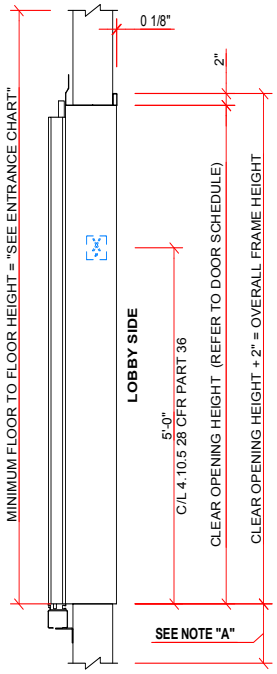

ENTRANCE LEFT SIDE VIEW

ENTRANCE TYPE : M721
FOR ELEVATOR 1

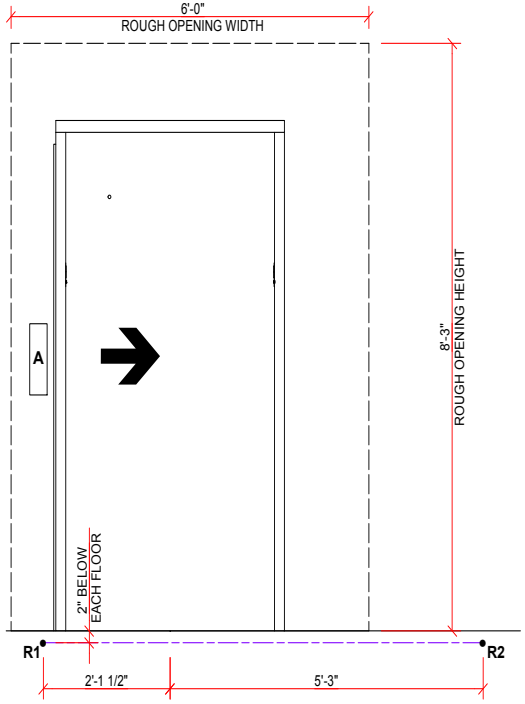

ENTRANCE ELEVATION VIEW AT TYPICAL FLOOR
1 SPEED
LEFT HAND FRONT ENTRANCE
FOR ELEVATOR 1

HALL FIXTURES ARE FOR REPRESENTATION ONLY. FOR ACTUAL LOCATION OF POCKETS FOR HALL FIXTURES, CONTACT ELEVATOR CONTRACTOR.

FRONT ENTRANCE HALL FIXTURES

ITEM	DESCRIPTION	FLOOR
A	HALL STATION	TYPICAL

NOTES:
GENERAL CONTRACTOR RESPONSIBLE FOR HOISTWAY REINFORCING AT FLOOR SLAB BEFORE INSTALLATION OF ENTRANCE FRAMES. MINIMUM OF 4" HIGH X 8" WIDE REINFORCED CONCRETE, REINFORCED OF OPENING REQUIRED FOR ANCHORING SILL SUPPORT ASSEMBLY, REINFORCING TO BE LOCATED WITH RESPECT TO REACTION POINTS, REFERENCE INSTALLATION DRAWINGS ARE AVAILABLE UPON REQUEST.

REACTIONS (LBS.) DUE TO LOADS ON DOOR PANELS, APPROX. HORIZONTAL LOADS AND LOCATION TO BUILDINGS SHOWN PER ASME A17.1 PART II,
THE SPECIFIED LOADS ARE CONSIDERED IMPACTED.

NOTE "A":
8" MINIMUM STRUCTURAL
SUPPORT FOR SILL INSTALLATION

ENTRANCE CHART

M721 ENTRANCE:
CENTER OPENING AND 1 SPEED = **FRAME OPENING + 1'-3"**
2 SPEED = **FRAME OPENING + 1'-5"**

R2	243
R1	601
	CASE 1
DOOR REACTION	

4.1533

THIS ING AND ALL INFORMATION THEREON IS THE PROPRIETARY PROPERTY OF THYS RUPP ELEVATOR AND MUST NOT BE MADE PUBLIC OR COPIED. THIS DRAWING IS LO SUBJECT TO RETURN ON DEMAND AND IS NOT TO BE USED DIRECTLY OR INDIRECTLY, IN ANY MANNER DETRIMENTAL TO THE INTEREST OF THYSSENKRUPP ELEVATOR.

FOR: MIDLAND FIRE STATION NO 5

ADDRESS: 2210 W GOLF COURSE ROAD
CITY: MIDLAND, TX 79701

thyssenkrupp

DRAWN	REV	JOB NUMBER	DATE	SHEET
MS	A	1103-2225-01A	2/12/2020	6 OF 7

ENTRANCE WALL DIMENSIONS		
DIM "C" MIN. WALL THK. REQUIRED	**DIM "D"** WALL FACE TO FRAME FACE	**DIM "E"** SHAFT LINER THICKNESS
8 1/2"	3/4"	REFER TO NOTE B

PLEASE REFERENCE THE RAIL STACK SHEET OF THIS PACKAGE FOR BUILDING LANDING MATRIX

ELEVATOR: 1 **FRONT ENTRANCE SCHEDULE**

FLOOR	ENTRANCE DIMS.	WALL TYPE	WALL SIZE	
			ACTUAL	OA. FRAME "B" DIM.
2	7'-0" H X 3'-6" W	TBD	TBD	TBD
1	7'-0" H X 3'-6" W	TBD	TBD	TBD

FOR ELEVATOR: 1

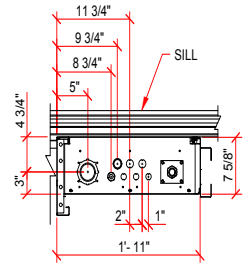

LOBBY SIDE
CONTROLLER KNOCKOUT DETAIL

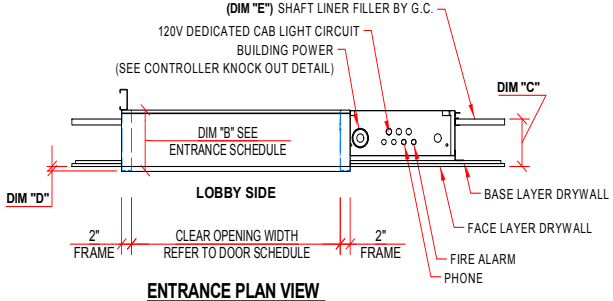

ENTRANCE PLAN VIEW

TOTAL WEIGHT	ELEVATOR 1	ELEVATOR
CAB AND HALL DOORS	327 LBS	

FEATURES OF YOUR ENTRANCES		
FEATURES	FINISH	LOCATION
DOOR OPEN STRUT BUMPERS:	PROVIDED	@1,2
KICKPLATES:	————	@1,2
BINDERS:	————	@1,2
SILL FINISH:	ALUMINUM	@1,2

FEATURES OF ENTRANCES	DATA
SILL MAXIMUM WHEEL LOADS	625 LBS
KEYHOLES TO BE	INCLUDED
THIS FRAME HAS A WARNOCK HERSEY LABEL OF	2 HOURS
DUST COVERS	NOT INCLUDED

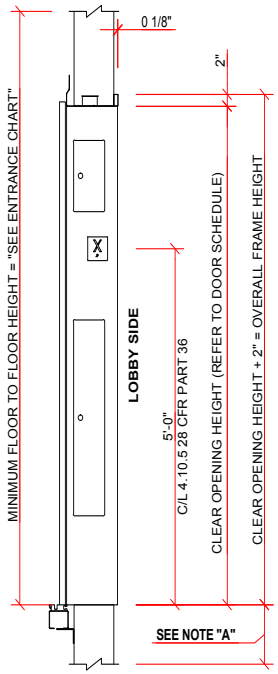

ENTRANCE SIDE VIEW
ENTRANCE TYPE : M721
FOR ELEVATOR 1

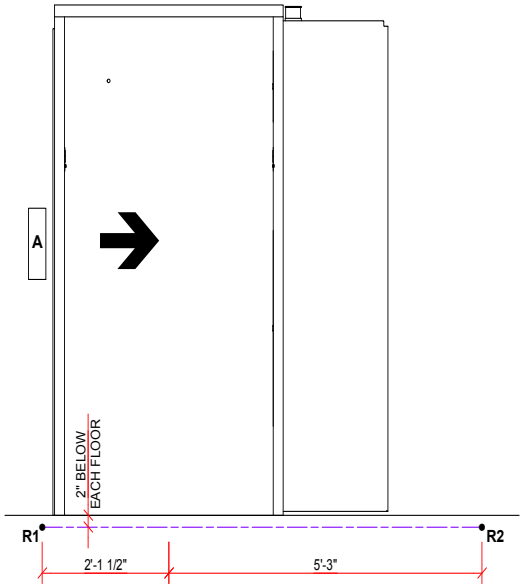

ENTRANCE ELEVATION VIEW
1 SPEED
LEFT HAND FRONT ENTRANCE
FOR ELEVATOR 1

LEAVE OFF ENTIRE WALL AT FLOOR **2**
FOR FRAME AND CONTROLLER INSTALLATION

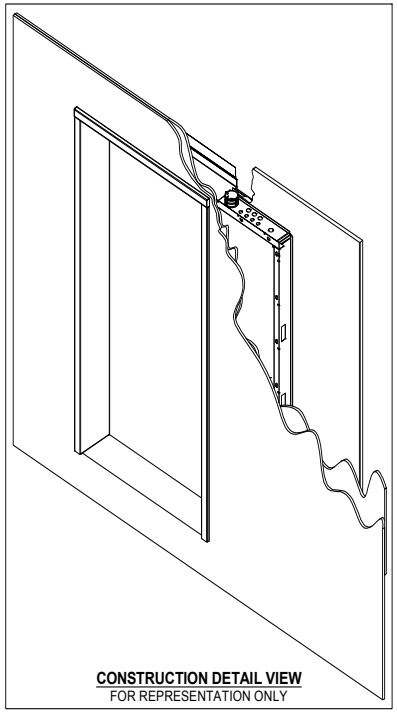

CONSTRUCTION DETAIL VIEW
FOR REPRESENTATION ONLY

NOTES:
GENERAL CONTRACTOR RESPONSIBLE FOR HOISTWAY REINFORCING AT FLOOR SLAB BEFORE INSTALLATION OF ENTRANCE FRAMES. MINIMUM OF 4" HIGH X 8" WIDE REINFORCED CONCRETE, REINFORCED OF OPENING REQUIRED FOR ANCHORING SILL SUPPORT ASSEMBLY, REINFORCING TO BE LOCATED WITH RESPECT TO REACTION POINTS, REFERENCE INSTALLATION DRAWINGS ARE AVAILABLE UPON REQUEST.

REACTIONS (LBS.) DUE TO LOADS ON DOOR PANELS, APPROX. HORIZONTAL LOADS AND LOCATION TO BUILDINGS SHOWN PER ASME A17.1 PART II,
THE SPECIFIED LOADS ARE CONSIDERED IMPACTED.

ELECTRICAL CONTRACTOR NOTE:
3 PHASE POWER, 120V 15 AMP CIRCUIT, FIRE ALARM AND PHONE TO BE ROUTED TO THE TOP OF THE CONTROLLER AT THE CONTROLLER LANDING LEVEL.

NOTE "A":
8" MINIMUM STRUCTURAL
SUPPORT FOR SILL INSTALLATION

NOTE B:
SHAFT LINER THICKNESS AND TYPE TO BE DETERMINED AND ADVISED BY G.C./ ARCHITECT TO ENSURE LOCAL FIRE RATING IS ACHIEVED.

R2	243
R1	601
	CASE 1
	DOOR REACTION

ENTRANCE CHART

M721 ENTRANCE:
CENTER OPENING AND 1 SPEED = **FRAME OPENING + 1'-3"**
2 SPEED = **FRAME OPENING + 1'-5"**

4.1534

THIS ING AND ALL INFORMATION THEREON IS THE PROPRIETARY PROPERTY OF THYS RUPP ELEVATOR AND MUST NOT BE MADE PUBLIC OR COPIED. THIS DRAWING IS LO SUBJECT TO RETURN ON DEMAND AND IS NOT TO BE USED DIRECTLY OR INDIRECTLY, IN ANY MANNER DETRIMENTAL TO THE INTEREST OF THYSSENKRUPP ELEVATOR.

FOR: MIDLAND FIRE STATION NO 5

ADDRESS: 2210 W GOLF COURSE ROAD
CITY: MIDLAND, TX 79701

thyssenkrupp

DRAWN	REV	JOB NUMBER	DATE	SHEET
MS	A	1103-2225-01A	2/12/2020	7 OF 7

PROJECT NO: ----
SYSTEMS: SLIDING BALANCER TRACK
ISO 9001:2015 CERTIFIED

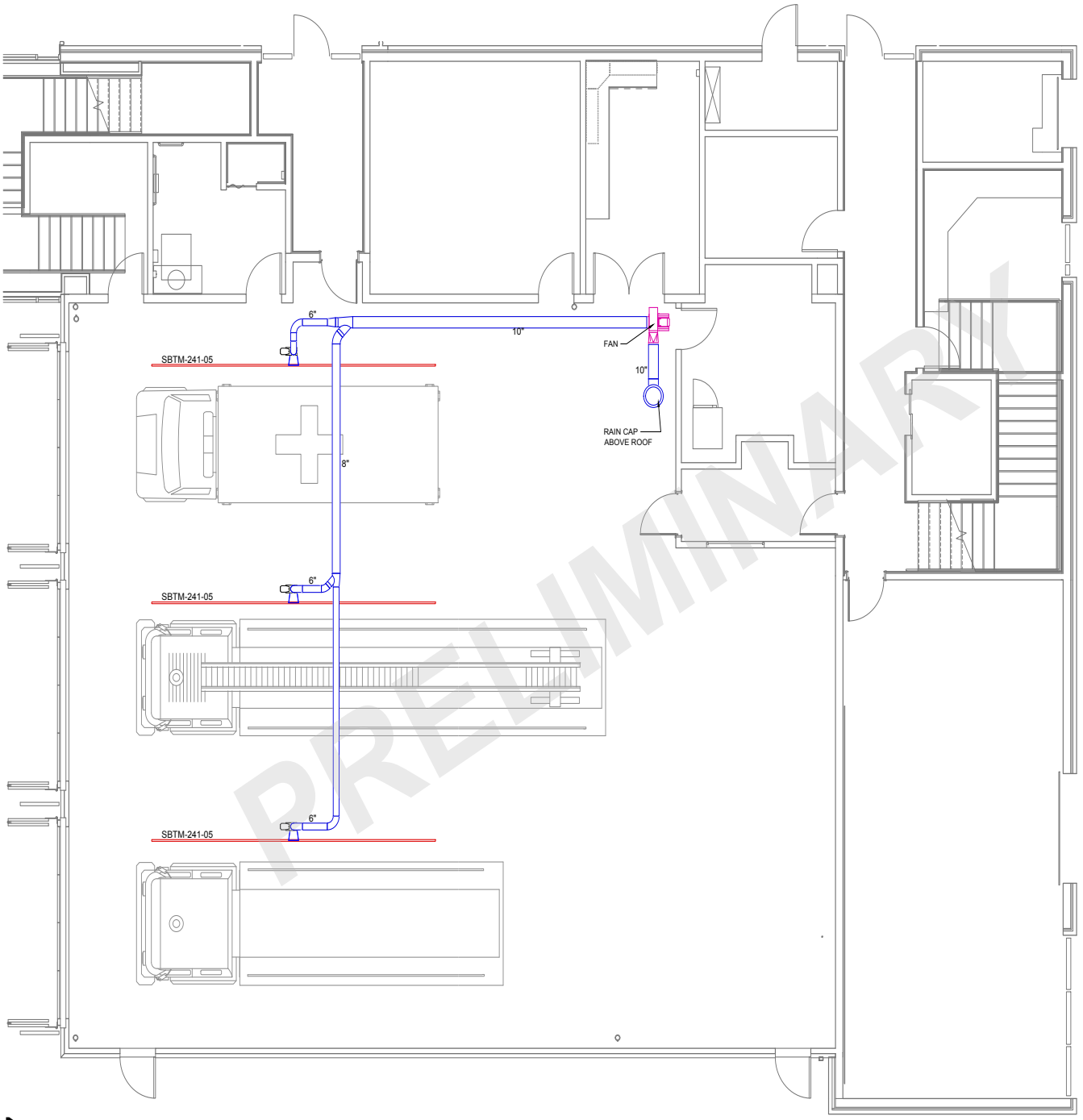

PRELIMINARY

GENERAL CONSTRUCTION NOTES:

1. FOR THE PURPOSE OF CLEARNESS AND LEGIBILITY DRAWINGS ARE DIAGRAMMATIC AND DESIGN INTENT ONLY.
   CONTRACTOR SHALL VERIFY ALL DIMENSIONS BY FIELD MEASUREMENT BEFORE BEGINNING ANY FABRICATION OR CONSTRUCTION.
2. ALL WORK SHALL BE IN ACCORDANCE WITH ALL APPLICABLE FEDERAL, STATE AND OCAL CODES IN ACCORDANCE WITH 2009 ICC (IBC, IMC).
3. ALL NEW MATERIAL METHODS, AND EQUIPMENT SHALL BE INSTALLED IN STRICT ACCORDANCE WITH THE BUILDING STANDARDS AS APPROVED.
4. CONTRACTOR SHALL INSTALL ALL EQUIPMENT N STRICT ACCORDANCE WITH MANUFACTURES' RECOMMENDATIONS.
5. CONTRACTOR SHALL COORDINATE EXACT LOCATION OF EXHAUST FANS, DUCTWORK, AND EXHAUST DROPS WITH EXISTING IN-PLACE CITY FIRE DEPARTMENTS EQUIPMENT, LIGHTING, AND ALL EXISTING CONDITIONS.
6. ALL EXHAUST DUCTWORK SHALL BE SPIRAL SEAM GALVANIZED STEEL FABRICATED AND INSTALLED IN ACCORDANCE WITH CHAPTER 6 OBBC MC AND SMACNA STANDARD MANUAL.
7. SHEETMETAL DUCT DIMENSIONS SHOWN ARE AIRWAY DIMENSIONS.
8. BALANCE EXHAUST SYSTEM AND EACH EXHAUST DROP MEET AIR QUANTITIES AS REQUIRED FOR **600** CFM PER DROP.
9. CONTRACTOR SHALL COORDINATE WITH CITY FIRE DEPARTMENT PRIOR TO ANY PENETRATION OR ROOF CUTTING.

FAN SCHEDULE

FAN TYPE	ID#	AIRFLOW (CFM)	RPM	STATIC PRESSURE (IN - WC)	VOLTS / PHASE	HP	BREAKER	WIRE
MAGNEGRIP	CF363-3	2100	3450	6 SP	3 PH	3		

REMARKS:

A. ITEM HAS BEEN SPECIFIED FOR QUALITY AND PERFORMANCE ANY APPROVED SUBSTITUTION IS AT THE RISK OF THE OWNER.

B. FAN SHALL BE UL LISTED AND AMCA CERTIFIED.

C. FAN SHALL BE CONTROLLED BY VES CONTROL PANEL , PROVIDE SENSORS, TRANSMITTERS, RECEIVERS, AND OTHER ITEMS REQUIRED FOR ALL FULLY AUTOMATIC SYSTEM.

D. PROVIDE RAIN CAP, BACKDRAFT DAMPER AND OTHER ITEMS REQUIRED FOR A A COMPLETE INSTALLATION.

E. ELECTRICAL INFORMATION SHALL BE VERIFIED BY NAMEPLATE RATINGS. COORDINATE WITH EXISTING ELECTRICAL SERVICE FOR THE BUILDING.

VEHICLE EXHAUST SYSTEM

DESCRIPTION	PART #	QTY	REMARKS
CONTROL PANEL			

REMARKS:

A. ITEM HAS BEEN SPECIFIED FOR QUALITY AND PERFORMANCE ANY APPROVED SUBSTITUTION IS AT THE RISK OF THE OWNER.

B. PROVIDE TRACK OR RAIL SYSTEM, TRANSITION ELBOW, HIGH TEMPERATURE HOSE, HOSE CLAMPS, NOZZLES, TAILPIPE CONNECTORS, FRESH AIR INTAKE, AND OTHER ITEMS REQUIRED FOR A COMPLETE INSTALLATION.

C. PROVIDE WIRELESS CONTROL PANEL ACTIVATION, PRESSURE SENSORS,WIRELESS TRANSMITTERS, AND ADDITIONAL COMPONENTS IF REQUIRED FOR AUTOMATIC FAN CONTROL.

D. VEHICLE EXHAUST SYSTEM DESIGN AND DRAWING IS THE SOLE PROPERTY OF THE DESIGNERS, CLEAN AIR CONCEPTS.

E. DETAILS MAY NOT REPRESENT THE SAME KIND OF VEHICLE IN PLAN VIEW.

F. DETAILS ARE MEANT TO ILLUSTRATE "TYPICAL" ELEVATION VIEWS.

made in USA

FLOOR PLAN - DIESEL EXHAUST SYSTEM
SCALE: NOT NECESSARLY TO ANY SCALE
FOR ILLUSTRATION PUPROSES ONLY

THIS DRAWING, (VEHICLE EXHAUST SYSTEM) DESIGN IS THE SOLE PROPERTY OF CLEAN AIR CONCEPTS. IT IS NOT TO BE USED OR DUPLICATED WITHOUT THE WRITTEN PERMISSION OF THE DESIGNERS. 1.800.875.5440

The MagneGrip Group
Vehicle Exhaust Venting Systems

11449 DEERFIELD ROAD
Cincinnati, Ohio 45242
Fax (513) 247-2502
Office (513) 489-4440
CLEAN AIR CONCEPTS

REVISIONS:

PROJECT: Midland Fire Station #5 ---- Midland, TX
DIESEL EXHAUST SYSTEM
SHEET TITLE: DIESEL EXHAUST SYSTEM - FLOOR PLAN

DRN:	CHK:	CADD:
EDR	XX	

DATE: 08/16/19

SHEET No.:

4.1535

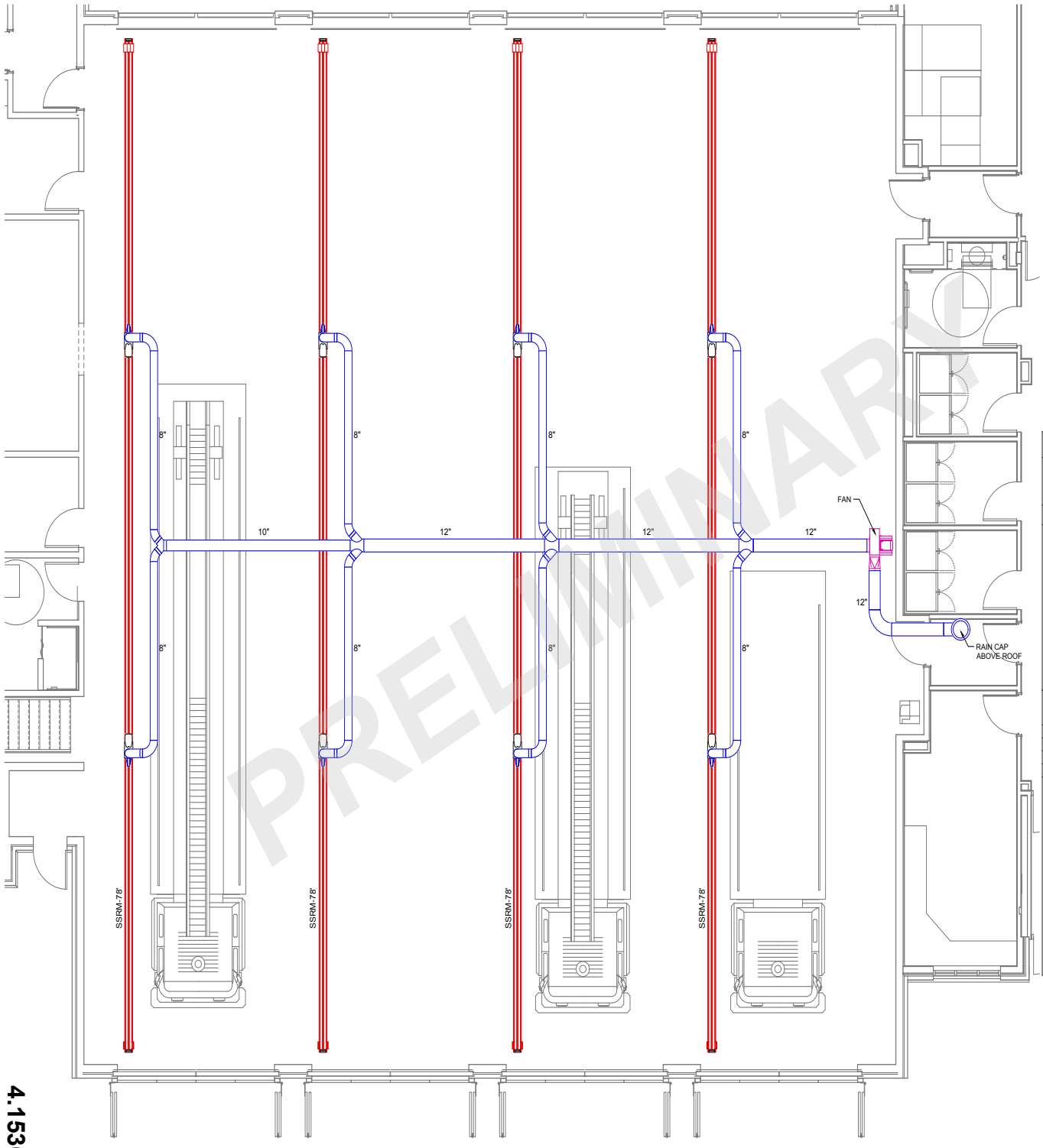

PRELIMINARY

PROJECT NO: ----
SYSTEMS: STRAIGHT SUCTION RAIL
ISO 9001:2015 CERTIFIED

GENERAL CONSTRUCTION NOTES:

1. FOR THE PURPOSE OF CLEARNESS AND LEGIBILITY DRAWINGS ARE DIAGRAMMATIC AND DESIGN INTENT ONLY.
   CONTRACTOR SHALL VERIFY ALL DIMENSIONS BY FIELD MEASUREMENT BEFORE BEGINNING ANY FABRICATION OR CONSTRUCTION.
2. ALL WORK SHALL BE IN ACCORDANCE WITH ALL APPLICABLE FEDERAL, STATE AND OCAL CODES IN ACCORDANCE WITH 2009 ICC (IBC, IMC).
3. ALL NEW MATERIAL METHODS, AND EQUIPMENT SHALL BE INSTALLED IN STRICT ACCORDANCE WITH THE BUILDING STANDARDS AS APPROVED.
4. CONTRACTOR SHALL INSTALL ALL EQUIPMENT N STRICT ACCORDANCE WITH MANUFACTURES' RECOMMENDATIONS.
5. CONTRACTOR SHALL COORDINATE EXACT LOCATION OF EXHAUST FANS, DUCTWORK, AND EXHAUST DROPS WITH EXISTING IN-PLACE CITY FIRE DEPARTMENTS EQUIPMENT, LIGHTING, AND ALL EXISTING CONDITIONS.
6. ALL EXHAUST DUCTWORK SHALL BE SPIRAL SEAM GALVANIZED STEEL FABRICATED AND INSTALLED IN ACCORDANCE WITH CHAPTER 6 OBBC MC AND SMACNA STANDARD MANUAL.
7. SHEETMETAL DUCT DIMENSIONS SHOWN ARE AIRWAY DIMENSIONS.
8. BALANCE EXHAUST SYSTEM AND EACH EXHAUST DROP MEET AIR QUANTITIES AS REQUIRED FOR **600** CFM PER DROP.
9. CONTRACTOR SHALL COORDINATE WITH CITY FIRE DEPARTMENT PRIOR TO ANY PENETRATION OR ROOF CUTTING.

FAN SCHEDULE

FAN TYPE	ID#	AIRFLOW (CFM)	RPM	STATIC PRESSURE (IN - WC)	VOLTS / PHASE	HP	BREAKER	WIRE
MAGNEGRIP	CF363-5	3300	3450	6 SP	3 PH	5		

REMARKS:

A. ITEM HAS BEEN SPECIFIED FOR QUALITY AND PERFORMANCE ANY APPROVED SUBSTITUTION IS AT THE RISK OF THE OWNER.

B. FAN SHALL BE UL LISTED AND AMCA CERTIFIED.

C. FAN SHALL BE CONTROLLED BY VES CONTROL PANEL , PROVIDE SENSORS, TRANSMITTERS, RECEIVERS, AND OTHER ITEMS REQUIRED FOR ALL FULLY AUTOMATIC SYSTEM.

D. PROVIDE RAIN CAP, BACKDRAFT DAMPER AND OTHER ITEMS REQUIRED FOR A A COMPLETE INSTALLATION.

E. ELECTRICAL INFORMATION SHALL BE VERIFIED BY NAMEPLATE RATINGS. COORDINATE WITH EXISTING ELECTRICAL SERVICE FOR THE BUILDING.

VEHICLE EXHAUST SYSTEM

DESCRIPTION	PART #	QTY	REMARKS
CONTROL PANEL			

REMARKS:

A. ITEM HAS BEEN SPECIFIED FOR QUALITY AND PERFORMANCE ANY APPROVED SUBSTITUTION IS AT THE RISK OF THE OWNER.

B. PROVIDE TRACK OR RAIL SYSTEM, TRANSITION ELBOW, HIGH TEMPERATURE HOSE, HOSE CLAMPS, NOZZLES, TAILPIPE CONNECTORS, FRESH AIR INTAKE, AND OTHER ITEMS REQUIRED FOR A COMPLETE INSTALLATION.

C. PROVIDE WIRELESS CONTROL PANEL ACTIVATION, PRESSURE SENSORS,WIRELESS TRANSMITTERS, AND ADDITIONAL COMPONENTS IF REQUIRED FOR AUTOMATIC FAN CONTROL.

D. VEHICLE EXHAUST SYSTEM DESIGN AND DRAWING IS THE SOLE PROPERTY OF THE DESIGNERS, CLEAN AIR CONCEPTS.

E. DETAILS MAY NOT REPRESENT THE SAME KIND OF VEHICLE IN PLAN VIEW.

F. DETAILS ARE MEANT TO ILLUSTRATE "TYPICAL" ELEVATION VIEWS.

FLOOR PLAN - DIESEL EXHAUST SYSTEM
SCALE: NOT NECESSARLY TO ANY SCALE
FOR ILLUSTRATION PUPROSES ONLY

made in USA

THIS DRAWING, (VEHICLE EXHAUST SYSTEM) DESIGN IS THE SOLE PROPERTY OF CLEAN AIR CONCEPTS. IT IS NOT TO BE USED OR DUPLICATED WITHOUT THE WRITTEN PERMISSION OF THE DESIGNERS. 1.800.875.5440

The MagneGrip Group
Vehicle Exhaust Venting Systems

CLEAN AIR CONCEPTS
11449 DEERFIELD ROAD
Cincinnati, Ohio 45242
Office (513) 489-4440
Fax (513) 247-2502

REVISIONS:

PROJECT: Midland Fire Station #11 ---- Midland, TX
DIESEL EXHAUST SYSTEM
SHEET TITLE: DIESEL EXHAUST SYSTEM - FLOOR PLAN

DRN:	CHK:	CADD:
EDR	XX	

DATE: 08/16/19

SHEET No.:

4.1536

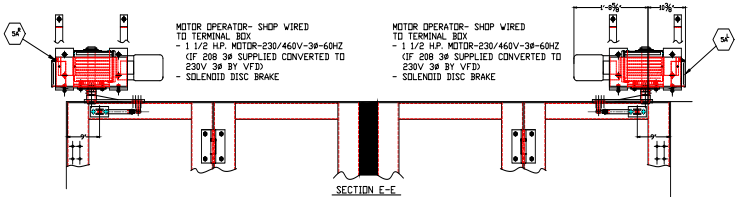

SECTION E-E
INTERIOR ELEVATION

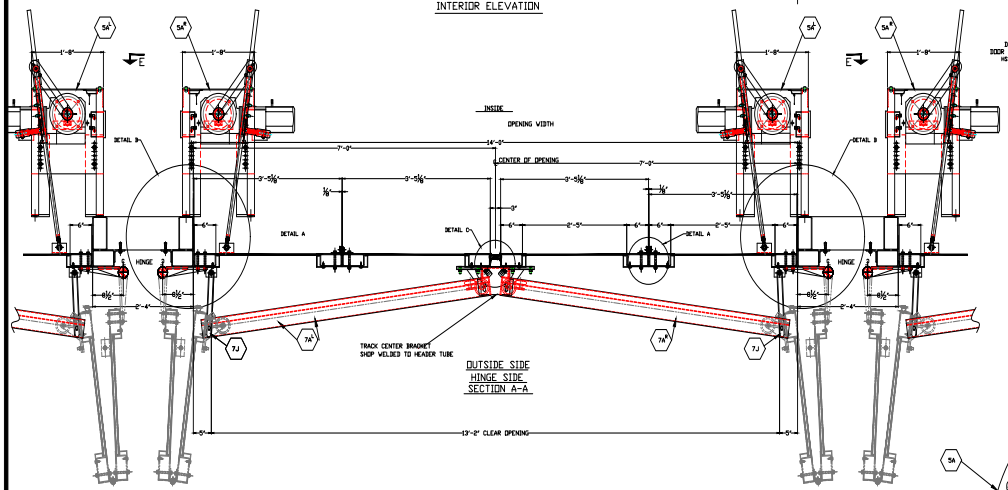

OUTSIDE SIDE
HINGE SIDE
SECTION A-A

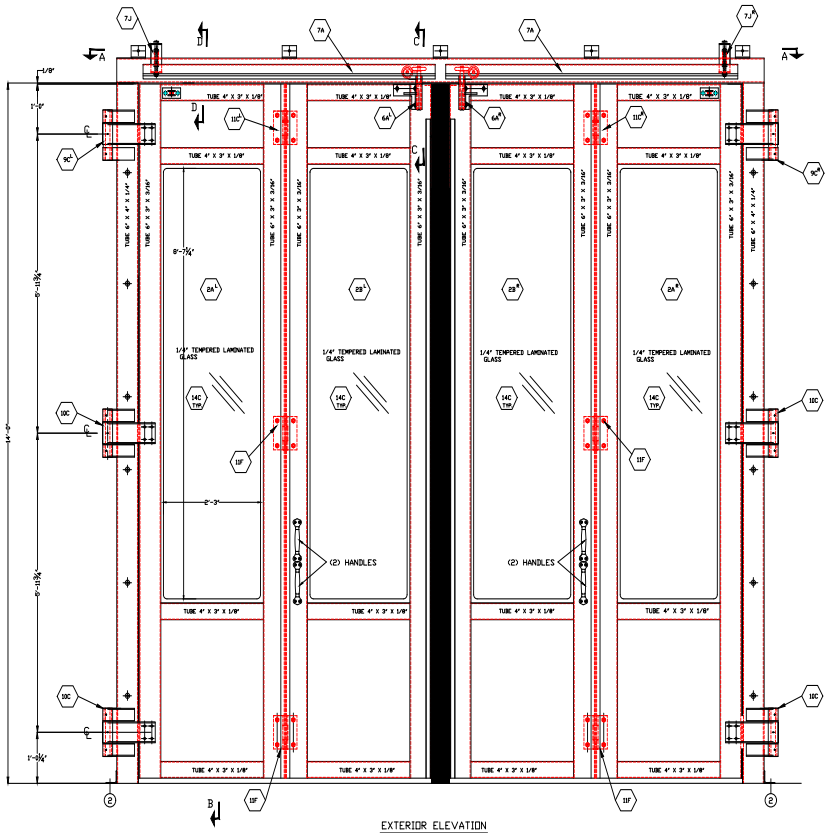

EXTERIOR ELEVATION
(10) REQ'D - FOUR FOLD DOOR (AS SHOWN)

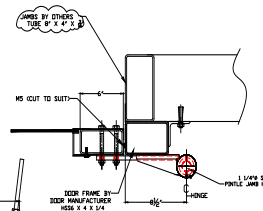

DETAIL "B"

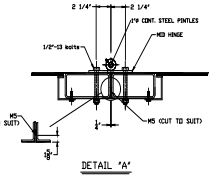

DETAIL "A"

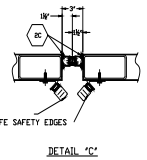

DETAIL "C"

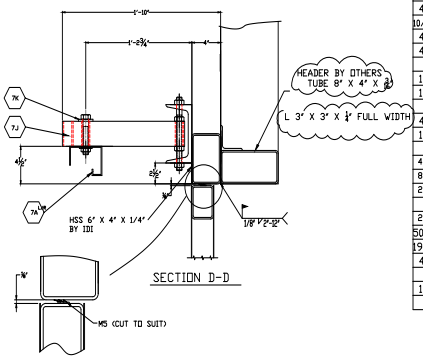

SECTION D-D

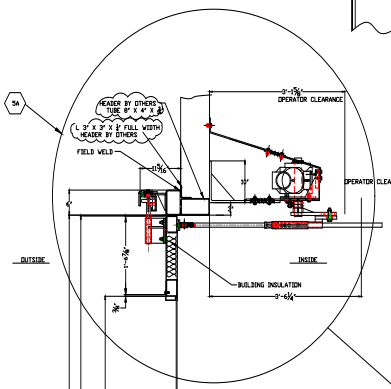

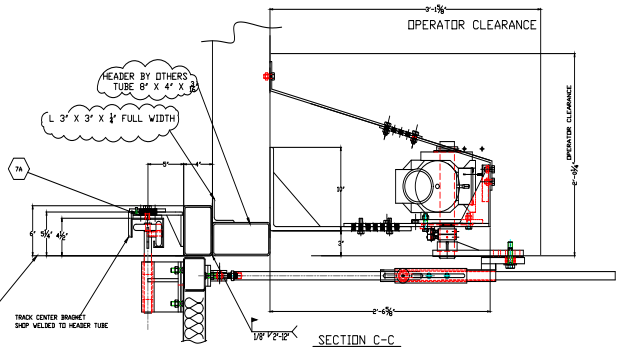

SECTION C-C

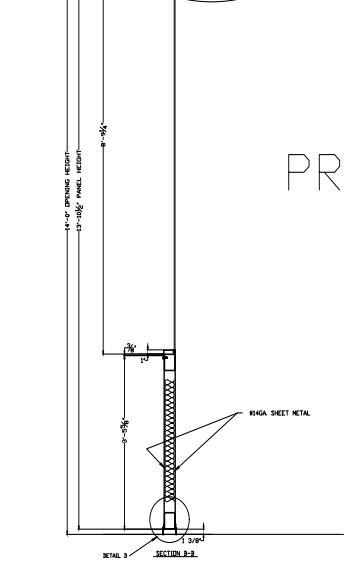

DETAIL D
SECTION B-B

PROPOSAL

PLEASE NOTE THAT INTERNATIONAL DOOR, INC. CAN PROVIDE A CUSTOM, FINISH COAT ON THE DOORS AWARDED SHOWN WITHIN THIS SUBMITTAL. THIS FINISH WOULD BE AN INDUSTRIAL TOP COAT AND, AS SUCH, MAY PRESENT MINOR IMPERFECTIONS, SCRATCHES AND VARIATIONS WITHIN THE TOP COAT APPEARANCE (HUE, SHEEN, ETC.). BY APPROVAL OF THIS SUBMITTAL, THE OWNER UNDERSTANDS AND ACCEPTS THE FACT THAT THE IMPERFECTIONS MAY EXIST AND ARE NOT COVERED BY ANY WARRANTY. ANY MAJOR PAINT/TOP COAT DEFECTS OR FAILURE WOULD BE GUARANTEED BY INTERNATIONAL DOOR TO THE ORIGINAL OWNER FOR A PERIOD OF ONE (1) CALENDAR YEAR FROM THE DATE OF DELIVERY. IT IS FURTHER UNDERSTOOD THAT SAID PAINT WARRANTY WOULD COVER MATERIAL ONLY AND DOES NOT INCLUDE LABOR, SURFACE PREPARATION OR APPLICATION OF THE NEW PAINT. ALL CAULKING, IF REQUIRED, WILL BE BY OTHERS.

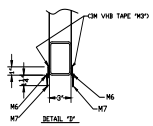

DETAIL "D"

PAINT NOTE:
(1) CLEAN SURFACES THOROUGHLY
(2) APPLY ONE COAT OF RECOATABLE EPOXY PRIMER (GRAY)
(3) ALLOW TIME FOR DRYING

FINISH PAINT:
(4) POLYURETHANE FINISH COATING COLOR - RAL

BILL OF MATERIAL

ITEM | JOB# 19-ID-2342 | SHEET# A1

TOTAL QTY.	UNIT QTY.	MARK	DESCRIPTION	REMARKS
10/10	1/1	2A L/R	JAMB PANELS W/ HINGES	
10/10	1/1	2B L/R	CENTER PANELS W/HINGES -	
20	2	7J	TRACK SUPPORT ASSEMBLY	
20	2	7K	PLATE WASHER	
10/10	1/1	5A R/L	OPERATOR ASSEMBLY	
10/10	1/1	6A R/L	ROLLER ASSEMBLY	
10/10	1/1	7A R/L	TRACK	
20	2	8A	DRIVE ARM ASSEMBLY	
10/10	1/1	9C L/R	JAMB-HINGE ASS'Y W/THRUST BEARING	
40	4	10C	JAMB-HINGE ASS'Y W/OUT THRUST BEARING	
10/10	1/1	11C L/R	MID-HINGE ASS'Y	
40	4	11F	MID-HINGE ASS'Y	
40	4	14C	SASH ASSEMBLY	GLASS BY NDT I.D.I.
10	2	13A	HAND RELEASE CABLE GUIDE	
10	2	13E	WIRE ROPE PLUG	
4	1	M3	3M VHB TAPE #4611 1" X 26 YARDS	
120	12	M5	SELF-ADHESIVE THERMO-PLASTIC ELASTOMER PART# 5070B X 8'-0	
40	4	M6	(ACTION) ALUM. RETAINER #A0088-MI-W X 8'-2" CUT TO (2) 3'-5 1/8"	
80	8	M7	(ACTION) RUBBER SEAL #V0036-00-W X 3'-5" (CUT TO SUIT)	
20	2	M9	MILLER EDGE #ME120Y-2E- X 13'-1 1/2"-T2 2 WIRE END WIRE LEAD X 3'-0" COLOR YELLOW, WITH ALUMINUM RETAINER # ME120-C X 15'-1 1/2"	
20	2	2C	DOOR CENTER RUBBER SEALS	
500	50	(1)	1/4"-14 X 5/8"LG. (S.T.S.) (S.D.S.) PLATED	
190	19	(2)	HILTI KWIK WEDGE BOLTS EXP ANCHORS KB3 1/2" X 3 3/4" LT	
4	2	(3)	1/2"-13 X 1 1/2" LG. BOLT (F.W., L.W. & NUT)	
			FIELD WIRING NOT IN I.D.I. CONTRACT	
10	1		CONTROL PANEL BY I.D.I.	
			INSTALLATION NOT IN I.D.I. CONTRACT	

REV	DATE	BY	DESCRIPTION
			TO FIELD
			TO SHOP
	10/25/19	EZ	FOR APPROVAL (EMAILED)

INTERNATIONAL DOOR, INC.
(734) 459-3000
8001 Ronda Dr. Canton, Michigan 48187

PROJECT:
DEFENSE LOGISTIC AGENCY
FIRE APPARATUS BUILDING
#911
775 W CACTUS RD.
NEW CUMBERLAND, PA. 17070

DRAWING TITLE:
GENERAL ARRANGEMENT FOR (OUTSIDE MOUNT)
FOUR FOLD DOORS -ELECTRIC OPERATED

DOOR# 52A, 52B, 52C, 52D, 52E
DOOR# 52F, 52G, 52H, 52J, 52K
OPENING SIZE 14'-0" x 14'-0"

ARCH.
CONTR.
DRAWN: RB
CHECKED: EZ
APPROVED:
DATE 10/17/19
CUSTOMER NO.
JOB NO. 19-ID-2342
SHEET A1 OF

This drawing, including principle of design, is the property of International Door, Inc. It must not be reproduced in any manner nor submitted to outside parties for examination without our consent. It shall be used only as a means of reference to work designed or furnished by us, unless expressly authorized and consented to in writing by International Door, Incorporated, Canton, Michigan.

4.1537

NORTH AMERICAN KITCHEN SOLUTIONS INCORPORATED

172 REASER COURT PHONE: 440-365-4567 TOLL FREE PH: 800-854-3267 WWW.NAKSINC.COM

ELYRIA, OHIO 44035 FAX: 440-365-2100 TOLL FREE FAX: 800-716-1214 SALES@NAKSINC.COM

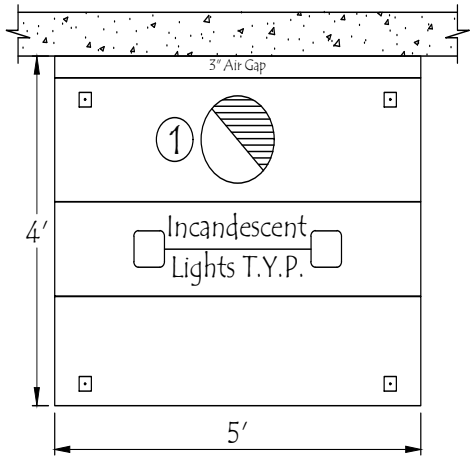

PLAN VIEW

SCALE: 3/8" = 1' - 0"

HOOD NO.	MODEL	LENGTH	MAX. COOKING TEMP.	① EXHAUST PLENUM					② SUPPLY PLENUM						HOOD CONSTRUCTION
				TOTAL EXH. CFM	RISER(S)				TOTAL SUP. CFM	RISER(S)					
					DIA.	QTY.	CFM	S.P.		WIDTH	LENG.	QTY..	CFM	S.P.	
1	EX. ONLY	60" NOM 60" OD	700 Deg.	1250	12"	1	1250	0.5"	-	-	-	-	-	-	STAINLESS/ALUMINIZED

DUCT OPENING ARE RECOMMENDED SIZES

OPENINGS TO BE PUT IN FIELD

CLASSIFIED EPH ANSI/NSF2

c UL us LISTED Safety Certified MH29547

NORTH AMERICAN KITCHEN SOLUTIONS INCORPORATED

172 REASER COURT PHONE: 440-365-4567 TOLL FREE PH: 800-854-3267 WWW.NAKSINC.COM

ELYRIA, OHIO 44035 FAX: 440-365-2100 TOLL FREE FAX: 800-716-1214 SALES@NAKSINC.COM

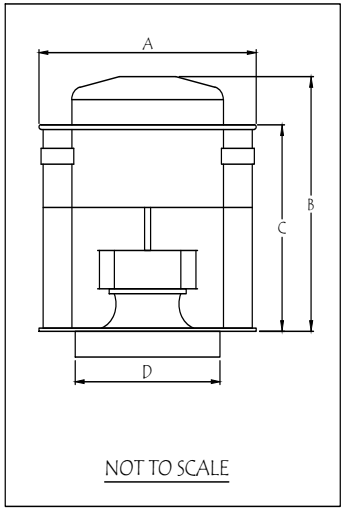

FAN MODEL	A	B	C	D	WT. LBS.
20D	26″	19¼″	16½″	19″ SQ.	72 LBS.

FAN UNIT NO.	FAN UNIT MODEL#	① EXHAUST FAN								
		MODEL	TAG	CFM	S.P.	RPM	H.P.	Ø	VOLTS	FLA
1	20D EF-1	20D	EF-1	1250	0.625″	1680	1/4	1	115	2.6

ANSI/NSF2

c UL us LISTED Safety Certified MH29547

NORTH AMERICAN KITCHEN SOLUTIONS INCORPORATED

172 REASER COURT PHONE: 440-365-4567 TOLL FREE PH: 800-854-3267 WWW.NAKSINC.COM

ELYRIA, OHIO 44035 FAX: 440-365-2100 TOLL FREE FAX: 800-716-1214 SALES@NAKSINC.COM

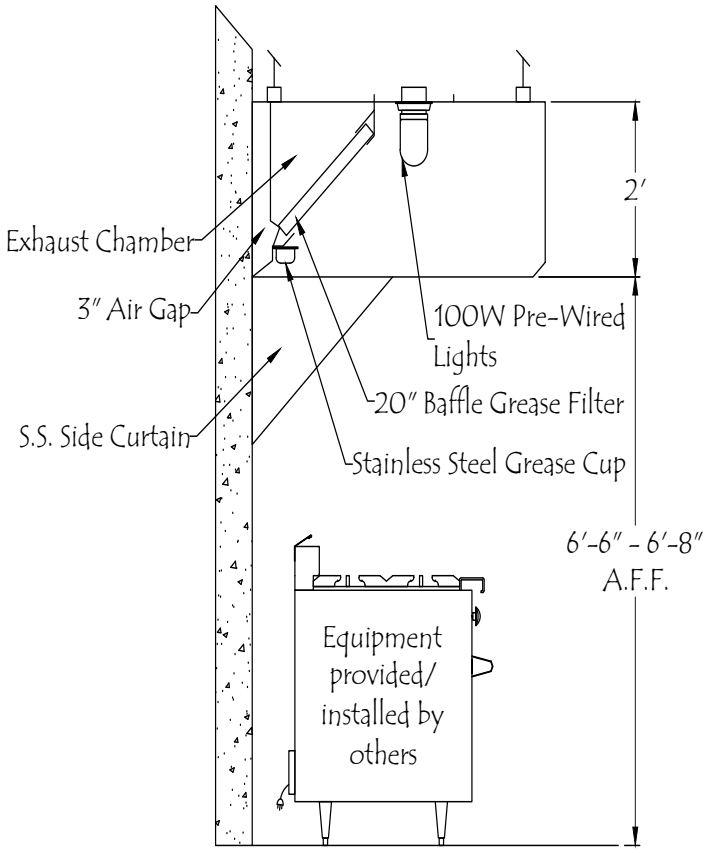

SIDE VIEW

SCALE: 3/8″= 1′ - 0″

ANSI/NSF2

LISTED Safety Certified MH29547

4.1540

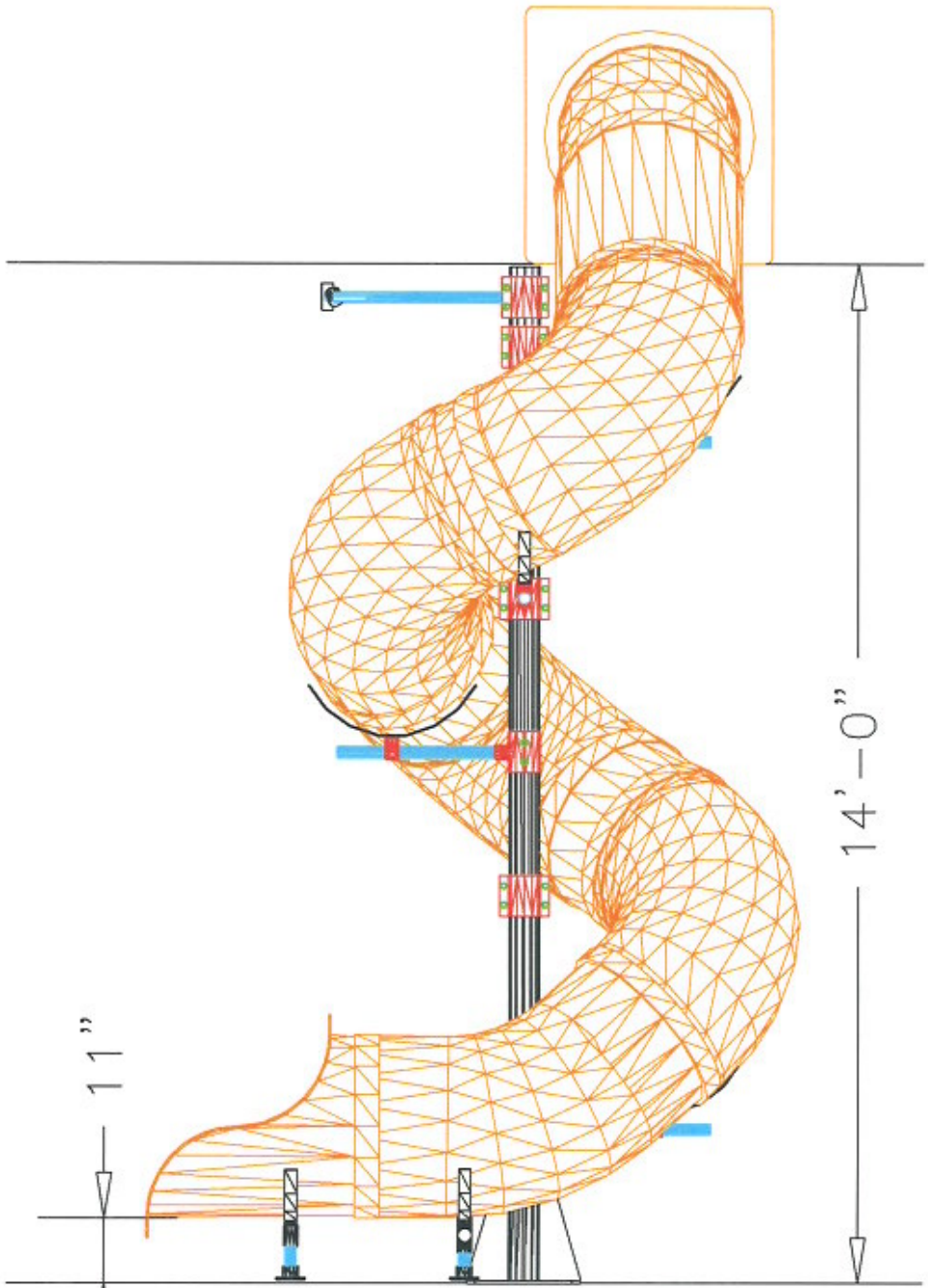
14'-0"
11"

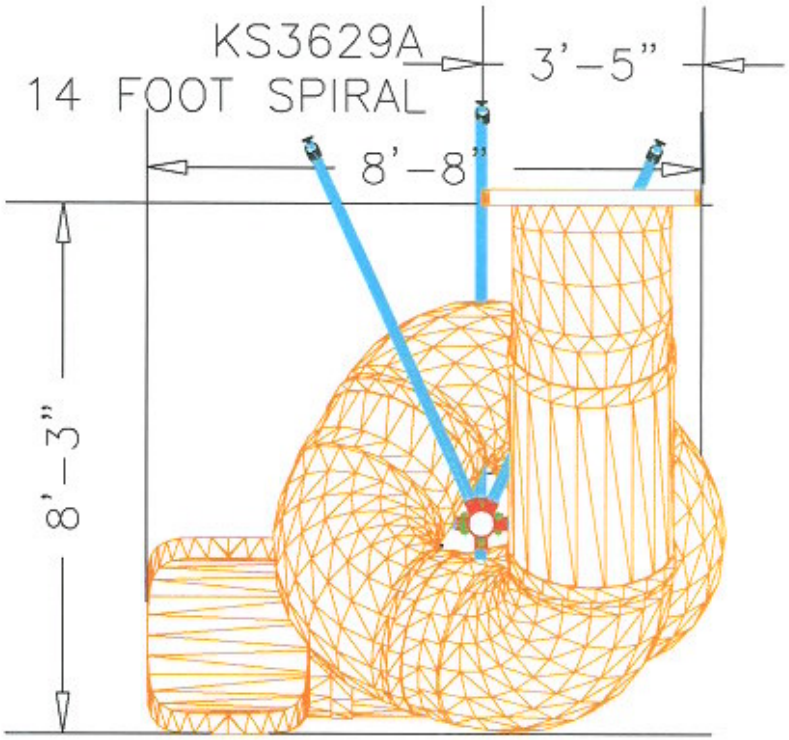
KS3629A
14 FOOT SPIRAL
3'-5"
8'-8"
8'-3"

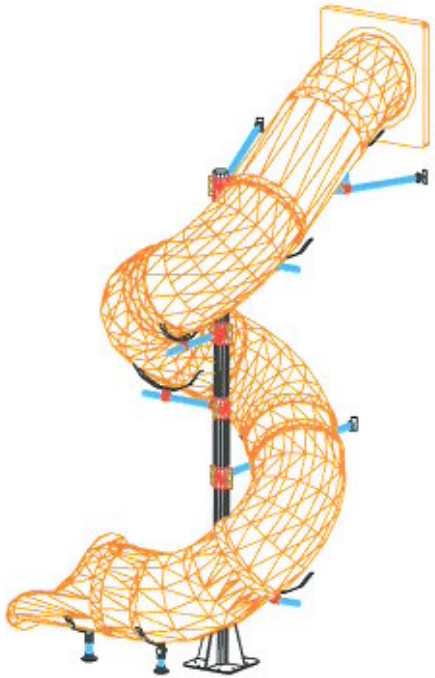

February 20, 2020

Addendum No. 02

Project: Fire Stations 5 & 11

Owner: City of Midland

Architect: Martinez Architects, LP
Project Number: MA 18017

martinez
ARCHITECTS

This Addendum forms a part of the Contract Documents and modifies the original Bidding Documents and/or prior Addenda as noted below. All conditions, requirements, materials and workmanship shall be satisfied as described in the Contract Documents unless specifically stated otherwise. This Addendum consists of changes to the contract documents, specifications, and drawings as listed and described below.

Clarifications:

1. Commercial Load sheets submitted to Oncor for both Fire Stations are attached for reference.
2. Should coordination with Oncor be required for relocation of existing power poles and relocation or raising of existing aerial power lines, the City shall coordinate this work directly with Oncor outside of the Construction Contract.
3. Demolition of existing construction @ Fire Station 5 is complete and not part of this contract.
4. Coverboard at membrane roof areas shall be product specified in Section 07 54 22 2.04 C, not Section 06 16 00 2.06
5. Plumbing drawings state the trench drain @ Wash Bay shall be provided by "Wash Bay Vendor". For reference of this scope, a vendor drawing of the trench drain is attached.
6. Answers to Structural RFIs (where a change is required to the documents, it will be formally issued in Addendum #3:
    a. A404 and S212 are showing 13 WT 6x8. Does each get a brace? (see next question)
    No, only four WT are supported by the kickers below. Each of the four WT is supported by 2 kickers per details 7 and 9/S605.

    b. A701 Shows 8 Kickers- required? See question a.
    Yes, they are required. See answer to question a.

    c. A502 – A504 is calling them "Steel Brackets". 7&9/S605 Shows them as wood braces with elaborate detail. It refers us to Arch. Drws. For wood grade and bolt patterns. I have not found them in Arch. notes or drawings.
    We have coordinated this item with arch, and we will change the wood in detail 7&9/S605 to steel pipe.

    d. 10/S502 uses the term "at pipe". Are these to be pipe braces? If so more detail please.
    Yes, they are indicating the kicker braces. We will revise details 7&9/S605 (see answer on question c) to show pipe braces instead of wood.

    e. 7/S605 is showing something as to a top mount for each brace but does not specify what. More detail please.
    It is detail 9/S605. Cut location has been adjusted.

Revisions to Bidding Requirements:

1. Requests for Information from bidding contractors will not be considered after February 24th. The final addendum will be issued February 25th.

Revisions to Specifications:

1. Section 04 72 00 – Cast Stone
    - **ADD** Renaissance Cast Stone as Acceptable Manufacturer.

2. Section 07 41 13 – Metal Roof Panels

- **ADD** A-lert KR Roof System by Centurion Industries, Inc. (800-344-0609) as approved equal Product/Manufacturer.

3. Section 08 35 13 – Four Fold Doors
   - **ADD** Door Engineering's FF300XT door as approved equal to Paragraph 2.1

4. Section 08 36 00 – Sectional Overhead Doors
   - **REMOVE** References to "Jackshaft" operator.
     - Sectional overhead doors shall be standard lift with standard lift operator per manufacturer.

5. Section 08 71 00 – Door Hardware
   - **ADD** Door Bottom @ each Dorm Door, see revised attached Hardware Index and Specification Section.

6. Section 26 51 15 – Ceiling Fans
   - **ADD** New Specification Section

Revisions to Drawings (Both Fire Stations):

1. **Architectural Sheets**
   - **REMOVE** any references to "PEMB". These facilities shall be conventional structural steel buildings.

2. **Structural Sheets**
   - **REVISED** sheets for the following changes, as clouded on attached sheets listed below under "Attachments":
     - **Station 5:**
       1. Revise/Add details and call-outs at Gabion Wall and Generator Pads
       2. Revise/Add details, dimensions, and call-outs at 4-fold door jambs and head
       3. Specify and Add Detail for rappelling bar installed at Membrane Roof
       4. Revise detail of HSS Tube at Clay Masonry Wall

     - **Station 11:**
       1. Revise General Note G.22 on S101
       2. Revise Spread Footing Schedule
       3. Revise/Add Detail call-out 3/S303 on S201
       4. Revise Column Spacing @ Fuel Station canopies to match Architectural
       5. Revise/Add details, dimensions, and call-outs at 4-fold door jambs and head
       6. Revise Details 1 & 12 on S305
       7. Revise Details 4 & 7 on S306
       8. Add Foundation Detail at Fuel Tank
       9. Revise Details 4 & 5 on S502
       10. Revise Detail 10 on S603
       11. Revise Roof Framing Details as Clouded on Sheets
       12. Revise Schedule on 9/S701
       13. Add Detail 8/S703

Revisions to Drawings (Fire Station 11 only):

1. **Civil, Plumbing, Architectural Sheets**
   - **REVISE** Sidewalk where refrigerant lines cross sidewalk to reach condensing units
     - Provide trench through sidewalks for refrigerant lines
     - Cover trench with metal tread plate level with sidewalk
     - Refrigerant lines shall not be buried at any point

2. **C241 – Drainage Plan (Basins)**

- **REVISE** to address City Plan Review Comments
    - Civil Response to Plan Review Comments attached

3. **C300 – Utility Plan**
    - **REVISE** drawing scale to 1" = 30'
    - **REVISE** to address City Plan Review Comments
        - Civil Response to Plan Review Comments attached

4. **A201 – Floor Plan**
    - **REVISED** as follows:
        - Revised RR 127 layout
        - Show four-fold doors swinging outward
        - Shift extractor in Utility 133 such that trench drain does not conflict with column footing

5. **A301 – Roof Plan**
    - **ADD** Detail call-out
    - **ADD** downspout call-out

6. **A302 – Roof Details**
    - **ADD** Detail 2

7. **A303, A304, A305 – Roof Details**
    - **ADD** New Sheets

8. **A401 – Exterior Elevations**
    - **REVISE** louver location above four-fold doors

9. **A502, A503 – Wall Sections**
    - **REVISE** details at four-fold door head

10. **A601 – Enlarged Floor Plan**
    - **REVISE** layout of RR 127

11. **A603 – Interior Elevations**
    - **ADD** Wall Finish Legend (**Applies to both Fire Stations)**
    - **REVISE** Tile finish call-outs

12. **A802 – Details**
    - **ADD** New Sheet

13. **A902 – Door & Window Schedules**
    - **REVISE** Window Types 08 and 09

14. **A903 – Floor Finish Plan**
    - **ADD** Floor Finish Legend (**Applies to both Fire Stations)**

Revisions to Drawings (Fire Station 5 only):

1. **C203 – Grading Plan**
    - **REVISE** drawing scale from 1" = 30' to 1" = 20'

2. **A201 – Floor Plan**
    - **REMOVE** Reference to Detail 18/A602 from Keynote 3 Description, and **REPLACE** with "By Owner"

3. **A401 / A402 – Exterior Elevations**

- **REVISE** "Pre-fin metal brackets" and "architectural brackets" to "Simulated Wood Brackets, RE: Section 06 65 00"

4. **A501 – Wall Sections**
   - **REVISE** Louvers above four fold doors

5. **A602 – Interior Elevations**
   - **REVISE** Tile call-outs

6. **A803 – Details**
   - **ADD** Details 10 & 11 (jamb and head @ four-fold doors)

7. **A901 – Finish Schedule**
   - **REVISE** Wall Tile finish @ restrooms

Attachments:

1. Specification Sections:
   a. 08 71 00 – Door Hardware
      i. Revised Door Hardware Index also attached
   b. 26 51 15 – Ceiling Fans

2. Drawing sheets:
   a. C241 – Drainage Plan Basins (Fire Station 11)
   b. C300 – Utility Plan (Fire Station 11)
   c. A501 – Wall Sections (5)
   d. A602 – Interior Elevations (5)
   e. A803 – Details (5)
   f. A901 – Finish Schedule (5)
   g. A201 – Floor Plan (11)
   h. A301 – Roof Plan (11)
   i. A302 – Roof Details (11)
   j. A303, A304, A305 – Roof Details (11)
   k. A401 – Exterior Elevations (11)
   l. A502, A503 – Wall Sections (11)
   m. A601 – Enlarged Floor Plan (11)
   n. A603 – Interior Elevations (11)
   o. A802 – Details (11)
   p. A902 – Door & Window Schedules (11)
   q. A903 – Floor Finish Plan (11)
   r. S101 – General Notes (Fire Station 11)
   s. S201 – Foundation Plan (Both Stations)
   t. S202 – 2nd Floor Framing Plan (Fire Station 5)
   u. S202 – Foundation Plan – Alternates (Fire Station 11
   v. S203 – Low Roof Framing Plan (Fire Station 5)
   w. S211 – Mezzanine Framing & Low Roof Framing Plans (Fire Station 11)
   x. S212 – High Roof Framing Plan (Fire Station 11)
   y. S213 – Roof Framing Plans – Alternates (Fire Station 11)
   z. S304 – Foundation Details (Fire Station 5)
   aa. S305 – Foundation Details (Fire Station 11)
   bb. S306 – Foundation Details (Fire Station 11)
   cc. S404 – Framing Details (Fire Station 5)
   dd. S502 – Floor Framing Details (Fire Station 11)
   ee. S603 – Roof Framing Details (Both Stations)
   ff. S605 – Roof Framing Details (Both Stations)
   gg. S606 – Roof Framing Details (Fire Station 11)
   hh. S607 – Roof Framing Details (Fire Station 11)
   ii. S608 – Roof Framing Details (Fire Station 11)

jj. S609 – Roof Framing Details (Fire Station 11)
kk. S610 – Roof Framing Details (Fire Station 11)
ll. S701 – Masonry Details
mm. S703 – Masonry Details (Both Stations
nn. MEP Sheets – See MEP Addendum following pages

3. Vendor Drawings for Reference
   a. Trench Drain Vendor Drawing (for application @ Wash Bay)

4. Additional Documents
   a. Commercial Load Sheets submitted to Oncor for both Fire Stations
   b. Civil Response to City Plan Review Comments

-- See following pages for M/E/P/T Addendum Items --

SERVICE | QUALITY | INTEGRITY | SUSTAINABILITY

9601 McAllister Freeway
Suite 410
San Antonio, TX 78216
v 210.546.0200

Addendum

DATE
February 20, 2020

ADDENDUM NO.
02

PROJECT 196023.000| Midland Fire Station #5

The work described herein shall be added to the scope of work defined by the contract documents or it shall modify the scope of work defined by the contract documents as described. This work shall become a part of the contract documents by addendum.

SPECIFICATIONS

Item 01 **Specification Section 23 07 13 – Duct Insulation (Narrative Only)**

A. Revised section 3.2D.2 to read "2 inch thick with a minimum installed R-value of 8 when ducts are located in unconditioned spaces, such as ceiling plenum space.".

DRAWINGS

Item 02 **Sheet MEP101 – MEP Site Plan – Base Bid**

A. Added light fixtures for flagpole lighting.
B. Revised Electrical keyed note 12.

Item 03 **Sheet MEP102 – MEP Roof Plan**

A. Added roof cap for vehicle exhaust system.
B. Added keyed note 4.

Item 04 **Sheet M211 – Level 1 Mechanical Plan**

A. Revised keyed note 23, 24, 26, and 27.
B. Revise vehicle exhaust layout.

Item 05 **Sheet M401– Mechanical Schedules (Narrative Only)**

A. Added note 5 to Fan Schedule. Note shall read "PROVIDE WITH HANGING KIT AND MAGNEGRIP FAN CONTROLLER. COORDINATE WITH ELECTRICIAN FOR WIRING REQUIREMENTS.". Note 5 shall apply to EF-7.

Item 06 **Sheet E101 – Level 1 & Mezzanine Lighting Plan**

A. Revised lighting layout and changed fixture types in Shop/Scuba Equipment room, Electrical room and Yard Storage.
B. Revised relay panel zones.
C. Showed ceiling fan symbol instead of junction box.

Addendum No. 2

Item 07 **Sheet E102 – Level 2 Lighting Plan**

A. Revised relay panel zones.
B. Showed ceiling fan symbol instead of junction box.
C. Removed power and fan speed controller for dining room fan.
D. Revised lighting layout in apparatus bay.

Item 08 **Sheet E201 – Level 1 Power Plan**

A. Added rough-in and power for call box.
B. Added Electrical keyed note 23.

Item 09 **Sheet E202 – Level 2 & 3 Power Plan**

A. Removed elevator disconnect tag and revised keyed note 14.

Item 10 **Sheet E401 – Electrical One-Line Diagram**

A. Revised Electrical One-Line Diagram.
B. Revised Electrical keyed notes.

Item 11 **Sheet E501 – Electrical Schedules**

A. Added flagpole fixture type ‘S1’.

Item 12 **Sheet E502 – Electrical Schedules**

A. Revised Electrical panel schedule.

Item 13 **Sheet E601 – Electrical Details**

A. Revised grounding detail.

Item 14 **Sheet P212 – Level 2 & 3 Plumbing Plan**

A. Added 3/4” gas line to drop at BBQ grill Patio 224.
B. Added Keyed Note 16.

Item 15 **Sheet P401 – Plumbing Risers**

A. Modified gas riser.

Item 16 **Sheet P602 – Plumbing Details**

A. Added detail #14 for gas sleeve through wall.

Item 17 **Sheet TS211 – LEVEL 1 LOW VOLTAGE PLAN**

A. Added key notes number 3. Reference attached drawing.
B. Added data drop in front of the building next to the door 111 A. Reference attached drawing.

Addendum No. 2

END OF ADDENDUM

SECTION 08 71 00 – DOOR HARDWARE

PART 1 - GENERAL

1.01 RELATED DOCUMENTS

A. Drawings and general provisions of the Contract, including General and Supplementary Conditions and Division 01 Specification Sections, apply to this Section.

1.02 SUMMARY

A. Section includes:

1. Mechanical and electrified door hardware for:

    a. Swinging doors.
    b. Sliding doors.
    c. Gates.

2. Electronic access control system components, including:

    a. Biometric access control reader.
    b. Electronic access control devices.

3. Field verification, preparation and modification of existing doors and frames to receive new door hardware.
4. Lead-lining door hardware items required for radiation protection at door openings.
5. The intent of the hardware specification is to specify the hardware for interior and exterior doors, and to establish a type, continuity, and standard of quality. However, it is the door hardware supplier's responsibility to thoroughly review existing conditions, schedules, specifications, drawings, and other Contract Documents to verify the suitability of the hardware specified.

B. Exclusions: Unless specifically listed in hardware sets, hardware is not specified in this section for:

1. Windows
2. Cabinets (casework), including locks in cabinets
3. Signage
4. Toilet accessories
5. Overhead doors

C. Related Sections:

1. Division 01 Section "Alternates" for alternates affecting this section.
2. Division 07 Section "Joint Sealants" for sealant requirements applicable to threshold installation specified in this section.
3. Division 09 sections for touchup, finishing or refinishing of existing openings modified by this section.
4. Division 13 Section "Radiation Protection" for requirements for lead-lining for door hardware at openings indicated to receive radiation protection.

5. Division 26 sections for connections to electrical power system and for low-voltage wiring.
6. Division 28 sections for coordination with other components of electronic access control system.

1.03 REFERENCES

A. UL - Underwriters Laboratories

1. UL 10B - Fire Test of Door Assemblies
2. UL 10C - Positive Pressure Test of Fire Door Assemblies
3. UL 1784 - Air Leakage Tests of Door Assemblies
4. UL 305 - Panic Hardware

B. DHI - Door and Hardware Institute

1. Sequence and Format for the Hardware Schedule
2. Recommended Locations for Builders Hardware
3. Key Systems and Nomenclature

C. ANSI - American National Standards Institute

1. ANSI/BHMA A156.1 - A156.29, and ANSI/BHMA A156.31 - Standards for Hardware and Specialties

1.04 SUBMITTALS

A. General:

1. Submit in accordance with Conditions of Contract and Division 01 requirements.
2. Highlight, encircle, or otherwise specifically identify on submittals deviations from Contract Documents, issues of incompatibility or other issues which may detrimentally affect the Work.
3. Prior to forwarding submittal, comply with procedures for verifying existing door and frame compatibility for new hardware, as specified in PART 3, “EXAMINATION” article, herein.

B. Action Submittals:

1. Product Data: Technical product data for each item of door hardware, installation instructions, maintenance of operating parts and finish, and other information necessary to show compliance with requirements.
2. Riser and Wiring Diagrams: After final approval of hardware schedule, submit details of electrified door hardware, indicating:

a. Wiring Diagrams: For power, signal, and control wiring and including:
1) Details of interface of electrified door hardware and building safety and security systems.
2) Schematic diagram of systems that interface with electrified door hardware.
3) Point-to-point wiring.
4) Risers.

3. Samples for Verification: If requested by Architect, submit production sample of requested door hardware unit in finish indicated, and tagged with full description for coordination with schedule.

a. Samples will be returned to supplier. Units that are acceptable to Architect may, after final check of operations, be incorporated into Work, within limitations of key coordination requirements.

4. Door Hardware Schedule: Submit schedule with hardware sets in vertical format as illustrated by Sequence of Format for the Hardware Schedule as published by the Door and Hardware Institute. Indicate complete designations of each item required for each door or opening, include:

    a. Door Index; include door number, heading number, and Architects hardware set number.
    b. Opening Lock Function Spreadsheet: List locking device and function for each opening.
    c. Quantity, type, style, function, size, and finish of each hardware item.
    d. Name and manufacturer of each item.
    e. Fastenings and other pertinent information.
    f. Location of each hardware set cross-referenced to indications on Drawings.
    g. Explanation of all abbreviations, symbols, and codes contained in schedule.
    h. Mounting locations for hardware.
    i. Door and frame sizes and materials.
    j. Name and phone number for local manufacturer's representative for each product.
    k. Operational Description of openings with any electrified hardware (locks, exits, electromagnetic locks, electric strikes, automatic operators, door position switches, magnetic holders or closer/holder units, and access control components). Operational description should include operational descriptions for: egress, ingress (access), and fire/smoke alarm connections.
        1) Submittal Sequence: Submit door hardware schedule concurrent with submissions of Product Data, Samples, and Shop Drawings. Coordinate submission of door hardware schedule with scheduling requirements of other work to facilitate fabrication of other work that is critical in Project construction schedule.

5. Key Schedule:

    a. After Keying Conference, provide keying schedule listing levels of keying as well as explanation of key system's function, key symbols used and door numbers controlled.
    b. Use ANSI/BHMA A156.28 “Recommended Practices for Keying Systems” as guideline for nomenclature, definitions, and approach for selecting optimal keying system.
    c. Provide 3 copies of keying schedule for review prepared and detailed in accordance with referenced DHI publication. Include schematic keying diagram and index each key to unique door designations.
    d. Index keying schedule by door number, keyset, hardware heading number, cross keying instructions, and special key stamping instructions.
    e. Provide one complete bitting list of key cuts and one key system schematic illustrating system usage and expansion.
        1) Forward bitting list, key cuts and key system schematic directly to Owner, by means as directed by Owner.

    f. Prepare key schedule by or under supervision of supplier, detailing Owner’s final keying instructions for locks.

6. Templates: After final approval of hardware schedule, provide templates for doors, frames and other work specified to be factory or shop prepared for door hardware installation.

C. Informational Submittals:

1. Qualification Data: For Supplier, Installer and Architectural Hardware Consultant.
2. Product data for electrified door hardware:

    a. Certify that door hardware approved for use on types and sizes of labeled fire-rated doors complies with listed fire-rated door assemblies.

3. Warranty: Special warranty specified in this Section.

D. Closeout Submittals:

1. Operations and Maintenance Data: Provide in accordance with Division 01 and include:

    a. Complete information on care, maintenance, and adjustment; data on repair and replacement parts, and information on preservation of finishes.
    b. Catalog pages for each product.
    c. Factory order acknowledgement numbers (for warranty and service)
    d. Name, address, and phone number of local representative for each manufacturer.
    e. Parts list for each product.
    f. Final approved hardware schedule, edited to reflect conditions as-installed.
    g. Final keying schedule
    h. Copies of floor plans with keying nomenclature
    i. As-installed wiring diagrams for each opening connected to power, both low voltage and 110 volts.
    j. Copy of warranties including appropriate reference numbers for manufacturers to identify project.

1.05 QUALITY ASSURANCE

A. Supplier Qualifications and Responsibilities: Recognized architectural hardware supplier with record of successful in-service performance for supplying door hardware similar in quantity, type, and quality to that indicated for this Project and that provides certified Architectural Hardware Consultant (AHC) or Door Hardware Consultant (DHC) available to Owner, Architect, and Contractor, at reasonable times during the Work for consultation.

1. Warehousing Facilities: In Project's vicinity.
2. Scheduling Responsibility: Preparation of door hardware and keying schedules.
3. Engineering Responsibility: Preparation of data for electrified door hardware, including Shop Drawings, based on testing and engineering analysis of manufacturer's standard units in assemblies similar to those indicated for this Project.
4. Coordination Responsibility: Assist in coordinating installation of electronic security hardware with Architect and electrical engineers and provide installation and technical data to Architect and other related subcontractors.

    a. Upon completion of electronic security hardware installation, inspect and verify that all components are working properly.

B. Architectural Hardware Consultant Qualifications: Person who is experienced in providing consulting services for door hardware installations that are comparable in material, design, and extent to that indicated for this Project and meets these requirements:

1. For door hardware, DHI-certified, Architectural Hardware Consultant (AHC) or Door Hardware Consultant (DHC).
2. Can provide installation and technical data to Architect and other related subcontractors.
3. Can inspect and verify components are in working order upon completion of installation.
4. Capable of producing wiring diagrams.

5. Capable of coordinating installation of electrified hardware with Architect and electrical engineers.

C. Single Source Responsibility: Obtain each type of door hardware from single manufacturer.

D. Fire-Rated Door Openings: Provide door hardware for fire-rated openings that complies with NFPA 80 and requirements of authorities having jurisdiction. Provide only items of door hardware that are listed products tested by Underwriters Laboratories, Intertek Testing Services, or other testing and inspecting organizations acceptable to authorities having jurisdiction for use on types and sizes of doors indicated, based on testing at positive pressure and according to NFPA 252 or UL 10C and in compliance with requirements of fire-rated door and door frame labels.

E. Electrified Door Hardware: Listed and labeled as defined in NFPA 70, Article 100, by testing agency acceptable to authorities having jurisdiction.

F. Accessibility Requirements: For door hardware on doors in an accessible route, comply with governing accessibility regulations cited in “REFERENCES” article, herein.

G. Keying Conference

1. Incorporate keying conference decisions into final keying schedule after reviewing door hardware keying system including:

a. Function of building, flow of traffic, purpose of each area, degree of security required, and plans for future expansion.
b. Preliminary key system schematic diagram.
c. Requirements for key control system.
d. Requirements for access control.
e. Address for delivery of keys.

H. Pre-installation Conference

1. Review and finalize construction schedule and verify availability of materials, Installer's personnel, equipment, and facilities needed to make progress and avoid delays.
2. Inspect and discuss preparatory work performed by other trades.
3. Inspect and discuss electrical roughing-in for electrified door hardware.
4. Review sequence of operation for each type of electrified door hardware.
5. Review required testing, inspecting, and certifying procedures.

I. Coordination Conferences:

1. Installation Coordination Conference: Prior to hardware installation, schedule and hold meeting to review questions or concerns related to proper installation and adjustment of door hardware.
2. Electrified Hardware Coordination Conference: Prior to ordering electrified hardware, schedule and hold meeting to coordinate door hardware with security, electrical, doors and frames, and other related suppliers.

1.06 DELIVERY, STORAGE, AND HANDLING

A. Inventory door hardware on receipt and provide secure lock-up for hardware delivered to Project site.

B. Tag each item or package separately with identification coordinated with final door hardware schedule, and include installation instructions, templates, and necessary fasteners with each item or package.

1. Deliver each article of hardware in manufacturer's original packaging.

C. Project Conditions:

1. Maintain manufacturer-recommended environmental conditions throughout storage and installation periods.
2. Provide secure lock-up for door hardware delivered to Project. Control handling and installation of hardware items so that completion of Work will not be delayed by hardware losses both before and after installation.

D. Protection and Damage:

1. Promptly replace products damaged during shipping.
2. Handle hardware in manner to avoid damage, marring, or scratching. Correct, replace or repair products damaged during Work.
3. Protect products against malfunction due to paint, solvent, cleanser, or any chemical agent.

E. Deliver keys to manufacturer of key control system for subsequent delivery to Owner.

F. Deliver keys and permanent cores to Owner by registered mail or overnight package service.

1.07 COORDINATION

A. Coordinate layout and installation of floor-recessed door hardware with floor construction. Cast anchoring inserts into concrete.

B. Installation Templates: Distribute for doors, frames, and other work specified to be factory or shop prepared. Check Shop Drawings of other work to confirm that adequate provisions are made for locating and installing door hardware to comply with indicated requirements.

C. Security: Coordinate installation of door hardware, keying, and access control with Owner's security consultant.

D. Electrical System Roughing-In: Coordinate layout and installation of electrified door hardware with connections to power supplies and building safety and security systems.

E. Existing Openings: Where existing doors, frames and/or hardware are to remain, field verify existing functions, conditions and preparations and coordinate to suit opening conditions and to provide proper door operation.

1.08 WARRANTY

A. Warranty: Manufacturer's standard form in which manufacturer agrees to repair or replace components of door hardware that fail in materials or workmanship within specified warranty period.

1. Warranty Period: Beginning from date of Substantial Completion, for durations indicated.

a. Closers:

1) Mechanical: LCN 4050 series, 25 years
2) Electrified: 2 years.

b. Exit Devices:
1) Mechanical: 3 years.
2) Electrified: 1 year.

c. Locksets:
1) Mechanical: Schlage ND series, 10 years
2) Electrified: 1 year.

d. Continuous Hinges: Lifetime warranty.
e. Key Blanks: Lifetime

2. Warranty does not cover damage or faulty operation due to improper installation, improper use or abuse.

1.09 MAINTENANCE

A. Maintenance Tools: Furnish complete set of special tools required for maintenance and adjustment of hardware, including changing of cylinders.

PART 2 - PRODUCTS

2.01 MANUFACTURERS

A. Approval of manufacturers and/or products other than those listed as “Scheduled Manufacturer” or “Acceptable Manufacturers” in the individual article for the product category shall be in accordance with QUALITY ASSURANCE article, herein.

B. Approval of products from manufacturers indicated in “Acceptable Manufacturers” is contingent upon those products providing all functions and features and meeting all requirements of scheduled manufacturer’s product.

C. Where specified hardware is not adaptable to finished shape or size of members requiring hardware, furnish suitable types having same operation and quality as type specified, subject to Architect's approval.

2.02 MATERIALS

A. Fasteners

1. Provide hardware manufactured to conform to published templates, generally prepared for machine screw installation.
2. Furnish screws for installation with each hardware item. Finish exposed (exposed under any condition) screws to match hardware finish, or, if exposed in surfaces of other work, to match finish of this other work including prepared for paint surfaces to receive painted finish.
3. Provide concealed fasteners for hardware units exposed when door is closed except when no standard units of type specified are available with concealed fasteners. Do not use thru-bolts for installation where bolt head or nut on opposite face is exposed in other

work unless thru-bolts are required to fasten hardware securely. Review door specification and advise Architect if thru-bolts are required.
4. Install hardware with fasteners provided by hardware manufacturer.

B. Modification and Preparation of Existing Doors: Where existing door hardware is indicated to be removed and reinstalled.

1. Provide necessary fillers, Dutchmen, reinforcements, and fasteners, compatible with existing materials, as required for mounting new opening hardware and to cover existing door and frame preparations.
2. Use materials which match materials of adjacent modified areas.
3. When modifying existing fire-rated openings, provide materials permitted by NFPA 80 as required to maintain fire-rating.

C. Provide screws, bolts, expansion shields, drop plates and other devices necessary for hardware installation.

1. Where fasteners are exposed to view: Finish to match adjacent door hardware material.

D. Cable and Connectors: Hardwired Electronic Access Control Lockset and Exit Device Trim:

1. Data: 24AWG, 4 conductor shielded, Belden 9843, 9841 or comparable.
2. DC Power: 18 AWG, 2 conductor, Belden 8760 or comparable.
3. Provide type of data and DC power cabling required by access control device manufacturer for this installation.
4. Where scheduled in the hardware sets, provide each item of electrified hardware and wire harnesses with sufficient number and wire gauge with standardized Molex plug connectors to accommodate electric function of specified hardware. Provide Molex connectors that plug directly into connectors from harnesses, electric locking and power transfer devices. Provide through-door wire harness for each electrified locking device installed in a door and wire harness for each electrified hinge, electrified continuous hinge, electrified pivot, and electric power transfer for connection to power supplies.

2.03 HINGES

A. Manufacturers and Products:

1. Scheduled Manufacturer and Product: Ives 5BB series.
2. Acceptable Manufacturers and Products: Hager BB series, McKinney TA/T4A series, Stanley FBB Series.

B. Requirements:

1. Provide hinges conforming to ANSI/BHMA A156.1.
2. 1-3/4 inch (44 mm) thick doors, up to and including 36 inches (914 mm) wide:

a. Exterior: Standard weight, bronze or stainless steel, 4-1/2 inches (114 mm) high
b. Interior: Standard weight, steel, 4-1/2 inches (114 mm) high

3. 1-3/4 inch (44 mm) thick doors over 36 inches (914 mm) wide:

a. Exterior: Heavy weight, bronze/stainless steel, 5 inches (127 mm) high
b. Interior: Heavy weight, steel, 5 inches (127 mm) high

4. 2 inches or thicker doors:

a. Exterior: Heavy weight, bronze or stainless steel, 5 inches (127 mm) high
b. Interior: Heavy weight, steel, 5 inches (127 mm) high

5. Provide three hinges per door leaf for doors 90 inches (2286 mm) or less in height, and one additional hinge for each 30 inches (762 mm) of additional door height.
6. Where new hinges are specified for existing doors or existing frames, provide new hinges of identical size to hinge preparation present in existing door or existing frame.
7. Hinge Pins: Except as otherwise indicated, provide hinge pins as follows:

a. Steel Hinges: Steel pins
b. Non-Ferrous Hinges: Stainless steel pins
c. Out-Swinging Exterior Doors: Non-removable pins
d. Out-Swinging Interior Lockable Doors: Non-removable pins
e. Interior Non-lockable Doors: Non-rising pins

8. Width of hinges: 4-1/2 inches (114 mm) at 1-3/4 inch (44 mm) thick doors, and 5 inches (127 mm) at 2 inches (51 mm) or thicker doors. Adjust hinge width as required for door, frame, and wall conditions to allow proper degree of opening.
9. Provide hinges with electrified options as scheduled in the hardware sets. Provide with sufficient number and wire gage to accommodate electric function of specified hardware. Locate electric hinge at second hinge from bottom or nearest to electrified locking component.
10. Provide mortar guard for each electrified hinge specified.
11. Provide spring hinges where specified. Provide two spring hinges and one bearing hinge per door leaf for doors 90 inches (2286 mm) or less in height. Provide one additional bearing hinge for each 30 inches (762 mm) of additional door height.

2.04 CONTINUOUS HINGES

A. Aluminum Geared

1. Manufacturers:

a. Scheduled Manufacturer: Ives.
b. Acceptable Manufacturers: Select, Stanley.

2. Requirements:

a. Provide aluminum geared continuous hinges conforming to ANSI/BHMA A156.26, Grade 1.
b. Provide aluminum geared continuous hinges, where specified in the hardware sets, fabricated from 6063-T6 aluminum.
c. Provide split nylon bearings at each hinge knuckle for quiet, smooth, self-lubricating operation.
d. Provide hinges capable of supporting door weights up to 450 pounds, and successfully tested for 1,500,000 cycles.
e. On fire-rated doors, provide aluminum geared continuous hinges that are classified for use on rated doors by testing agency acceptable to authority having jurisdiction.
f. Provide aluminum geared continuous hinges with electrified option scheduled in the hardware sets. Provide with sufficient number and wire gage to accommodate electric function of specified hardware.
g. Install hinges with fasteners supplied by manufacturer.
h. Provide hinges 1 inch (25 mm) shorter in length than nominal height of door, unless otherwise noted or door details require shorter length and with symmetrical hole pattern.

2.05 ELECTRIC POWER TRANSFER

A. Manufacturers:

a. Scheduled Manufacturer: Von Duprin EPT-10.
b. Acceptable Manufacturers: ABH PT1000, Securitron CEPT-10.

B. Provide power transfer with electrified options as scheduled in the hardware sets. Provide with number and gage of wires sufficient to accommodate electric function of specified hardware.

C. Locate electric power transfer per manufacturer's template and UL requirements, unless interference with operation of door or other hardware items.

2.06 FLUSH BOLTS

A. Manufacturers:

1. Scheduled Manufacturer: Ives.
2. Acceptable Manufacturers: Burns, Rockwood.

B. Requirements:

1. Provide automatic, constant latching, and manual flush bolts with forged bronze or stainless-steel face plates, extruded brass levers, and with wrought brass guides and strikes. Provide 12 inch (305 mm) steel or brass rods at doors up to 90 inches (2286 mm) in height. For doors over 90 inches (2286 mm) in height increase top rods by 6 inches (152 mm) for each additional 6 inches (152 mm) of door height. Provide dust-proof strikes at each bottom flush bolt.

2.07 CYLINDRICAL LOCKS

A. Manufacturers and Products:

1. Scheduled Manufacturer and Product: Schlage ND series.
2. Acceptable Manufacturers and Products: Sargent 10-Line, Best 93k

B. Requirements:

1. Provide cylindrical locks conforming to ANSI/BHMA A156.2 Series 4000, Grade 1, and UL Listed for 3 hour fire doors.
2. Cylinders: Refer to "KEYING" article, herein.
3. Provide locks with standard 2-3/4 inches (70 mm) backset, unless noted otherwise, with 1/2 inch latch throw. Provide proper latch throw for UL listing at pairs.
4. Provide locksets with separate anti-rotation thru-bolts, and no exposed screws.
5. Provide independently operating levers with two external return spring cassettes mounted under roses to prevent lever sag.
6. Provide standard ASA strikes unless extended lip strikes are necessary to protect trim.
7. Provide electrified options as scheduled in the hardware sets.
8. Lever Trim: Solid cast levers without plastic inserts and wrought roses on both sides.

a. Lever Design: Schlage RHODES.

2.08 MORTISE LOCKS – NARROW STYLE

A. Manufacturer and Product:

1. Scheduled Manufacturer and Product: Accurate 8700/8800 series.
2. Acceptable Manufacturers and Products: No Substitute.

B. Requirements:

1. Provide narrow style mortise locks conforming to ANSI/BHMA A156.13, Grade 1 Operational and manufactured from heavy gauge steel, containing components of steel with zinc dichromate plating for corrosion resistance. Cylinders: Refer to “KEYING” article, herein.
2. Provide locks with necessary backset as required for door detail with full 3/4 inch (19 mm) throw stainless steel mechanical anti-friction latchbolt. Provide deadbolt with full 1 inch (25 mm) throw, constructed of stainless steel.
3. Provide standard ASA strikes unless extended lip strikes are necessary to protect trim.
4. Lever Trim: Matching levers and roses or escutcheons from manufacturer of standard mortise locks. Provide all necessary fasteners, spindles, and parts to make complete functioning unit.

    a. Lever Design: Match lock standard.

2.09 EXIT DEVICES

A. Manufacturers and Products:

1. Scheduled Manufacturer and Product: Von Duprin 99/33A series.
2. Acceptable Manufacturers and Products: Sargent 80 series.

B. Requirements:

1. Provide exit devices tested to ANSI/BHMA A156.3 Grade 1 and UL listed for Panic Exit or Fire Exit Hardware.
2. Cylinders: Refer to “KEYING” article, herein.
3. Provide touchpad type exit devices, fabricated of brass, bronze, stainless steel, or aluminum, plated to standard architectural finishes to match balance of door hardware.
4. Touchpad must extend a minimum of one half of door width. No plastic inserts are allowed in touchpads.
5. Provide exit devices with deadlatching feature for security and for future addition of alarm kits and/or other electrified requirements.
6. Provide flush end caps for exit devices.
7. Provide exit devices with manufacturer’s approved strikes.
8. Provide exit devices cut to door width and height. Install exit devices at height recommended by exit device manufacturer, allowable by governing building codes, and approved by Architect.
9. Mount mechanism case flush on face of doors, or provide spacers to fill gaps behind devices. Where glass trim or molding projects off face of door, provide glass bead kits.
10. Provide cylinder or hex-key dogging as specified at non fire-rated openings.
11. Provide factory drilled weep holes for exit devices used in full exterior application, highly corrosive areas, and where noted in hardware sets.
12. Provide electrified options as scheduled.
13. Top latch mounting: double or single tab mount for steel doors, face mount for aluminum doors eliminating requirement of tabs, and double tab mount for wood doors.

14. Provide exit devices with optional trim designs to match other lever and pull designs used on the project.

2.10 CYLINDERS **OPTION: EXISTING/NEW KEY SYSTEM**

NOTE: Select one or multiple series, as applicable, and update paragraph A. above with manufacturer and model from the list of products below. If multiple products are used (i.e. exterior and interior), then add language that specifies where the product is to be used (i.e. High Security at exterior doors:).

A. Manufacturers and Products:

1. Scheduled Manufacturer: Sargent.
2. Acceptable Manufacturers and Products: None.

B. Requirements:

1. Provide cylinders/cores, compliant with ANSI/BHMA A156.5; latest revision; cylinder face finished to match lockset, manufacturer's series as indicated. Refer to "KEYING" article, herein.
2. Provide cylinders in the below-listed configuration(s), distributed throughout the Project as indicated.

    a. Provide cylinders/cores to match existing.

2.11 KEYING

A. Provide a factory registered keying system, complying with guidelines in ANSI/BHMA A156.28, incorporating decisions made at keying conference.

B. Factory registered existing system**:** Provide cylinders/cores keyed into Owner's existing factory registered keying system.

C. Comply with guidelines in ANSI/BHMA A156.28, incorporating decisions made at keying conference.

D. Requirements:

1. Provide permanent cylinders/cores keyed by the manufacturer according to the following key system.

    a. Master Keying system as directed by the Owner.

2. Forward bitting list and keys separately from cylinders, by means as directed by Owner. Failure to comply with forwarding requirements will be cause for replacement of cylinders/cores involved at no additional cost to Owner.
3. Provide keys with the following features:

    a. Material: Nickel silver; minimum thickness of .107-inch (2.3mm)
    b. Geographically Exclusive: Where High Security or Security cylinders/cores are indicated, provide nationwide, geographically exclusive key system complying with the following restrictions.

4. Identification:

a. Mark permanent cylinders/cores and keys with applicable blind code per DHI publication “Keying Systems and Nomenclature” for identification. Do not provide blind code marks with actual key cuts.
b. Identification stamping provisions must be approved by the Architect and Owner.
c. Stamp cylinders/cores and keys with Owner’s unique key system facility code as established by the manufacturer; key symbol and embossed or stamped with “DO NOT DUPLICATE” along with the “PATENTED” or patent number to enforce the patent protection.
d. Failure to comply with stamping requirements will be cause for replacement of keys involved at no additional cost to Owner.
e. Forward permanent cylinders/cores to Owner, separately from keys, by means as directed by Owner.

5. Quantity: Furnish in the following quantities.

a. Change (Day) Keys: 3 per cylinder/core.
b. Master Keys: 6.

2.12 DOOR CLOSERS LCN 4050

A. Manufacturers and Products:

1. Scheduled Manufacturer and Product: LCN 4050 series.
2. Acceptable Manufacturers and Products: Norton 7500 series, Sargent 351 series.

B. Requirements:

1. Provide door closers conforming to ANSI/BHMA A156.4 Grade 1 requirements by BHMA certified independent testing laboratory. ISO 9000 certify closers. Stamp units with date of manufacture code.
2. Provide door closers with fully hydraulic, full rack and pinion action with cast aluminum cylinder.
3. Closer Body: 1-1/2 inch (38 mm) diameter with 11/16 inch (17 mm) diameter heat-treated pinion journal and full complement bearings.
4. Hydraulic Fluid: Fireproof, passing requirements of UL10C, and all weather requiring no seasonal closer adjustment for temperatures ranging from 120 degrees F to -30 degrees F.
5. Spring Power: Continuously adjustable over full range of closer sizes, and providing reduced opening force as required by accessibility codes and standards.
6. Hydraulic Regulation: By tamper-proof, non-critical valves, with separate adjustment for latch speed, general speed, and back check.
7. Pressure Relief Valve (PRV) Technology: Not permitted.
8. Provide stick on templates, special templates, drop plates, mounting brackets, or adapters for arms as required for details, overhead stops, and other door hardware items interfering with closer mounting.

2.13 DOOR TRIM

A. Manufacturers:

1. Scheduled Manufacturer: Ives.
2. Acceptable Manufacturers: Burns, Rockwood.

B. Requirements:

1. Provide push plates 4 inches (102 mm) wide by 16 inches (406 mm) high by 0.050 inch (1 mm) thick and beveled 4 edges. Where width of door stile prevents use of 4 inches (102 mm) wide plate, adjust width to fit.
2. Provide push bars of solid bar stock, diameter and length as scheduled. Provide push bars of sufficient length to span from center to center of each stile. Where required, mount back to back with pull.
3. Provide offset pulls of solid bar stock, diameter and length as scheduled. Where required, mount back to back with push bar.
4. Provide flush pulls as scheduled. Where required, provide back-to-back mounted model.
5. Provide pulls of solid bar stock, diameter and length as scheduled. Where required, mount back to back with push bar.
6. Provide pull plates 4 inches (102 mm) wide by 16 inches (406 mm) high by 0.050 inch (1 mm) thick, beveled 4 edges, and prepped for pull. Where width of door stile prevents use of 4 inches (102 mm) wide plate, adjust width to fit.
7. Provide wire pulls of solid bar stock, diameter and length as scheduled.
8. Provide decorative pulls as scheduled. Where required, mount back to back with pull.

2.14 PROTECTION PLATES

A. Manufacturers:

1. Scheduled Manufacturer: Ives.
2. Acceptable Manufacturers: Burns, Rockwood.

B. Requirements:

1. Provide kick plates, mop plates, and armor plates minimum of 0.050 inch (1 mm) thick, beveled four edges as scheduled. Furnish with sheet metal or wood screws, finished to match plates.
2. Sizes of plates:

    a. Kick Plates: 10 inches (254 mm) high by 2 inches (51 mm) less width of door on single doors, 1 inch (25 mm) less width of door on pairs
    b. Mop Plates: 4 inches (102 mm) high by 2 inches (51 mm) less width of door on single doors, 1 inch (25 mm) less width of door on pairs
    c. Armor Plates: 36 inches (914 mm) high by 2 inches (51 mm) less width of door on single doors, 1 inch (25 mm) less width of door on pairs

2.15 OVERHEAD STOPS AND OVERHEAD STOP/HOLDERS

A. Manufacturers:

1. Scheduled Manufacturers: Glynn-Johnson.
2. Acceptable Manufacturers: Rixson, Sargent.

B. Requirements:

1. Provide heavy duty concealed mounted overhead stop or holder as specified for exterior and interior vestibule single acting doors.
2. Provide heavy duty concealed mounted overhead stop or holder as specified for double acting doors.
3. Provide heavy or medium duty and concealed or surface mounted overhead stop or holder for interior doors as specified. Provide medium duty surface mounted overhead stop for interior doors and at any door that swings more than 140 degrees before striking

wall, open against equipment, casework, sidelights, and where conditions do not allow wall stop or floor stop presents tripping hazard.
4. Where overhead holders are specified provide friction type at doors without closer and positive type at doors with closer.

2.16 DOOR STOPS AND HOLDERS

A. Manufacturers:

1. Scheduled Manufacturer: Ives.
2. Acceptable Manufacturers: Burns, Rockwood.

B. Provide door stops at each door leaf:

1. Provide wall stops wherever possible. Provide convex type where mortise type locks are used and concave type where cylindrical type locks are used.
2. Where a wall stop cannot be used, provide universal floor stops for low or high rise options.
3. Where wall or floor stop cannot be used, provide medium duty surface mounted overhead stop.

2.17 THRESHOLDS, SEALS, DOOR SWEEPS, AUTOMATIC DOOR BOTTOMS, AND GASKETING

A. Manufacturers:

1. Scheduled Manufacturer: Zero International.
2. Acceptable Manufacturers: National Guard, Reese.

B. Requirements:

1. Provide thresholds, weather-stripping (including door sweeps, seals, and astragals) and gasketing systems (including smoke, sound, and light) as specified and per architectural details. Match finish of other items.
2. Smoke- and Draft-Control Door Assemblies: Where smoke- and draft-control door assemblies are required, provide door hardware that meets requirements of assemblies tested according to UL 1784 and installed in compliance with NFPA 105.
3. Size of thresholds:

   a. Saddle Thresholds: 1/2 inch (13 mm) high by jamb width by door width
   b. Bumper Seal Thresholds: 1/2 inch (13 mm) high by 5 inches (127 mm) wide by door width

4. Provide door sweeps, seals, astragals, and auto door bottoms only of type where resilient or flexible seal strip is easily replaceable and readily available.

2.18 SILENCERS

A. Manufacturers:

1. Scheduled Manufacturer: Ives.
2. Acceptable Manufacturers: Burns, Rockwood.

B. Requirements:

1. Provide "push-in" type silencers for hollow metal or wood frames.
2. Provide one silencer per 30 inches (762 mm) of height on each single frame, and two for each pair frame.
3. Omit where gasketing is specified.

2.19 DOOR POSITION SWITCHES

A. Manufacturers:

1. Scheduled Manufacturer: Schlage.
2. Acceptable Manufacturers: GE-Interlogix, Sargent.

B. Requirements:

1. Provide recessed or surface mounted type door position switches as specified.
2. Coordinate door and frame preparations with door and frame suppliers. If switches are being used with magnetic locking device, provide minimum of 4 inches (102 mm) between switch and magnetic locking device.

2.20 FINISHES

A. Finish: BHMA 626/652 (US26D); except:

1. Hinges at Exterior Doors: BHMA 630 (US32D)
2. Continuous Hinges: BHMA 628 (US28)
3. Push Plates, Pulls, and Push Bars: BHMA 630 (US32D)
4. Protection Plates: BHMA 630 (US32D)
5. Overhead Stops and Holders: BHMA 630 (US32D)
6. Door Closers: Powder Coat to Match
7. Wall Stops: BHMA 630 (US32D)
8. Weatherstripping: Clear Anodized Aluminum
9. Thresholds: Mill Finish Aluminum

PART 3 - EXECUTION

3.01 EXAMINATION

A. Prior to installation of hardware, examine doors and frames, with Installer present, for compliance with requirements for installation tolerances, labeled fire-rated door assembly construction, wall and floor construction, and other conditions affecting performance.

B. Field verify existing doors and frames receiving new hardware and existing conditions receiving new openings. Verify that new hardware is compatible with existing door and frame preparation and existing conditions.

C. Examine roughing-in for electrical power systems to verify actual locations of wiring connections before electrified door hardware installation.

D. Proceed with installation only after unsatisfactory conditions have been corrected.

3.02 INSTALLATION

A. Mount door hardware units at heights to comply with the following, unless otherwise indicated or required to comply with governing regulations.

1. Standard Steel Doors and Frames: ANSI/SDI A250.8.
2. Custom Steel Doors and Frames: HMMA 831.
3. Wood Doors: DHI WDHS.3, "Recommended Locations for Architectural Hardware for Wood Flush Doors."

B. Install each hardware item in compliance with manufacturer's instructions and recommendations, using only fasteners provided by manufacturer.

C. Do not install surface mounted items until finishes have been completed on substrate. Protect all installed hardware during painting.

D. Set units level, plumb and true to line and location. Adjust and reinforce attachment substrate as necessary for proper installation and operation.

E. Drill and countersink units that are not factory prepared for anchorage fasteners. Space fasteners and anchors according to industry standards.

F. Install operating parts so they move freely and smoothly without binding, sticking, or excessive clearance.

G. Hinges: Install types and in quantities indicated in door hardware schedule but not fewer than quantity recommended by manufacturer for application indicated or one hinge for every 30 inches (750 mm) of door height, whichever is more stringent, unless other equivalent means of support for door, such as spring hinges or pivots, are provided.

H. Intermediate Offset Pivots: Where offset pivots are indicated, provide intermediate offset pivots in quantities indicated in door hardware schedule but not fewer than one intermediate offset pivot per door and one additional intermediate offset pivot for every 30 inches (750 mm) of door height greater than 90 inches (2286 mm).

I. Lock Cylinders: Install construction cores to secure building and areas during construction period.

1. Replace construction cores with permanent cores as indicated in keying section.
2. Furnish permanent cores to Owner for installation.

J. Wiring: Coordinate with Division 26, ELECTRICAL sections for:

1. Conduit, junction boxes and wire pulls.
2. Connections to and from power supplies to electrified hardware.
3. Connections to fire/smoke alarm system and smoke evacuation system.
4. Connection of wire to door position switches and wire runs to central room or area, as directed by Architect.
5. Testing and labeling wires with Architect's opening number.

K. Key Control System: Tag keys and place them on markers and hooks in key control system cabinet, as determined by final keying schedule.

L. Door Closers: Mount closers on room side of corridor doors, inside of exterior doors, and stair side of stairway doors from corridors. Mount closers so they are not visible in corridors, lobbies and other public spaces unless approved by Architect.

M. Closer/Holders: Mount closer/holders on room side of corridor doors, inside of exterior doors, and stair side of stairway doors.

N. Power Supplies: Locate power supplies as indicated or, if not indicated, above accessible ceilings or in equipment room, or alternate location as directed by Architect.

O. Thresholds: Set thresholds in full bed of sealant complying with requirements specified in Division 07 Section "Joint Sealants."

P. Stops: Provide floor stops for doors unless wall or other type stops are indicated in door hardware schedule. Do not mount floor stops where they may impede traffic or present tripping hazard.

Q. Perimeter Gasketing: Apply to head and jamb, forming seal between door and frame.

R. Meeting Stile Gasketing: Fasten to meeting stiles, forming seal when doors are closed.

S. Door Bottoms: Apply to bottom of door, forming seal with threshold when door is closed.

3.03 FIELD QUALITY CONTROL

A. Engage qualified manufacturer trained representative to perform inspections and to prepare inspection reports.

1. Representative will inspect door hardware and state in each report whether installed work complies with or deviates from requirements, including whether door hardware is properly installed and adjusted.

3.04 ADJUSTING

A. Initial Adjustment: Adjust and check each operating item of door hardware and each door to ensure proper operation or function of every unit. Replace units that cannot be adjusted to operate as intended. Adjust door control devices to compensate for final operation of heating and ventilating equipment and to comply with referenced accessibility requirements.

1. Door Closers: Adjust sweep period to comply with accessibility requirements and requirements of authorities having jurisdiction.

B. Occupancy Adjustment: Approximately three to six months after date of Substantial Completion, Installer's Architectural Hardware Consultant must examine and readjust each item of door hardware, including adjusting operating forces, as necessary to ensure function of doors and door hardware.

3.05 CLEANING AND PROTECTION

A. Clean adjacent surfaces soiled by door hardware installation.

B. Clean operating items as necessary to restore proper function and finish.

C. Provide final protection and maintain conditions that ensure door hardware is without damage or deterioration at time of Substantial Completion.

3.06 DOOR HARDWARE SCHEDULE

A. Hardware items are referenced in the following hardware. Refer to the above-specifications for special features, options, cylinders/keying, and other requirements.

B. Hardware Sets:

Hardware Group No. 001
PROVIDE EACH RU DOOR(S) WITH THE FOLLOWING:

QTY		DESCRIPTION	CATALOG NUMBER	FINISH	MFR
1	EA	MORTISE CYLINDER	MATCH EXISTING CORE TYPE X CONSTRUCTION CORE	626	SAR
1	EA	PERMANENT CORE	MATCH EXISTING KEYWAY	626	SAR
1	EA	NOTE	REMAINDER OF HARDWARE BY DOOR MANUFACTURER		

-Coordinate hardware with door MFR.

Hardware Group No. 004
PROVIDE EACH BDP DOOR(S) WITH THE FOLLOWING:

QTY		DESCRIPTION	CATALOG NUMBER	FINISH	MFR
1	EA	MORTISE CYLINDER	MATCH EXISTING CORE TYPE X CONSTRUCTION CORE	626	SAR
1	EA	PERMANENT CORE	MATCH EXISTING KEYWAY	626	SAR
1	EA	NOTE	REMAINDER OF HARDWARE BY DOOR MANUFACTURER		

Hardware Group No. 103
PROVIDE EACH SGL DOOR(S) WITH THE FOLLOWING:

QTY		DESCRIPTION	CATALOG NUMBER	FINISH	MFR
3	EA	HINGE	5BB1 4.5 X 4.5	652	IVE
1	EA	ENTRANCE LOCK	ND53D RHO (MATCH EXISTING CORE TYPE)	626	SCH
1	EA	PERMANENT CORE	MATCH EXISTING KEYWAY	626	SAR
1	EA	WALL STOP	WS406/407CCV	630	IVE
1	EA	GASKETING	488S PSA H & J (USE SILENCERS @ NON-RATED DOORS)	BK	ZER

Hardware Group No. 201
PROVIDE EACH SGL DOOR(S) WITH THE FOLLOWING:

QTY		DESCRIPTION	CATALOG NUMBER	FINISH	MFR
3	EA	HINGE	5BB1 4.5 X 4.5	652	IVE
1	EA	STOREROOM LOCK	ND80D RHO (MATCH EXISTING CORE TYPE)	626	SCH
1	EA	PERMANENT CORE	MATCH EXISTING KEYWAY	626	SAR
1	EA	SURFACE CLOSER	4050 RW/PA X MTG BRKT, SPCR & PLATE AS REQ	689	LCN
1	EA	PROTECTION PLATE	8400 10" X 2" LDW B-CS	630	IVE
1	EA	WALL STOP	WS406/407CCV	630	IVE
1	EA	GASKETING	488S PSA H & J (USE SILENCERS @ NON-RATED DOORS)	BK	ZER

Hardware Group No. 205
PROVIDE EACH SGL DOOR(S) WITH THE FOLLOWING:

QTY		DESCRIPTION	CATALOG NUMBER	FINISH	MFR
3	EA	HINGE	5BB1HW 4.5 X 4.5 NRP	630	IVE
1	EA	STOREROOM LOCK	ND80D RHO (MATCH EXISTING CORE TYPE)	626	SCH
1	EA	PERMANENT CORE	MATCH EXISTING KEYWAY	626	SAR
1	EA	SURFACE CLOSER	4050 SCUSH X MTG BRKT, SPCR & PLATE AS REQ	689	LCN
1	EA	PROTECTION PLATE	8400 10" X 2" LDW B-CS	630	IVE
1	EA	RAIN DRIP	142A DW + 4" (OMIT AT COVERED SPACES)	AA	ZER
1	EA	GASKETING	328AA H & J	AA	ZER
1	EA	DOOR SWEEP	8198AA LENGTH AS REQ	AA	ZER
1	EA	THRESHOLD	65A LENGTH AS REQ	A	ZER

Hardware Group No. 301
PROVIDE EACH SGL DOOR(S) WITH THE FOLLOWING:

QTY		DESCRIPTION	CATALOG NUMBER	FINISH	MFR
3	EA	HINGE	5BB1 4.5 X 4.5	652	IVE
1	EA	PRIVACY LOCK	ND40S RHO	626	SCH
1	EA	SURFACE CLOSER	4050 RW/PA X MTG BRKT, SPCR & PLATE AS REQ	689	LCN
1	EA	PROTECTION PLATE	8400 10" X 2" LDW B-CS	630	IVE
1	EA	WALL STOP	WS406/407CCV	630	IVE
1	EA	GASKETING	488S PSA H & J (USE SILENCERS @ NON-RATED DOORS)	BK	ZER

Hardware Group No. 303
PROVIDE EACH SGL DOOR(S) WITH THE FOLLOWING:

QTY		DESCRIPTION	CATALOG NUMBER	FINISH	MFR
3	EA	HINGE	5BB1 4.5 X 4.5	652	IVE
1	EA	PRIVACY LOCK	ND40S RHO	626	SCH
1	EA	WALL STOP	WS406/407CCV	630	IVE
1	EA	GASKETING	488S PSA H & J (USE SILENCERS @ NON-RATED DOORS)	BK	ZER

Hardware Group No. 303G
PROVIDE EACH SGL DOOR(S) WITH THE FOLLOWING:

QTY		DESCRIPTION	CATALOG NUMBER	FINISH	MFR
3	EA	HINGE	5BB1 4.5 X 4.5	652	IVE
1	EA	PRIVACY LOCK	ND40S RHO	626	SCH
1	EA	WALL STOP	WS406/407CCV	630	IVE
1	EA	DOOR BOTTOM	369AA LENGTH AS REQ	AA	ZER
1	EA	GASKETING	188S PSA H & J	BK	ZER

Hardware Group No. 303GS
PROVIDE EACH SGL DOOR(S) WITH THE FOLLOWING:

QTY		DESCRIPTION	CATALOG NUMBER	FINISH	MFR
3	EA	HINGE	5BB1 4.5 X 4.5	652	IVE
1	EA	PRIVACY LOCK	ND40S RHO	626	SCH
1	EA	OH STOP	900S SERIES X SIZE & MOUNTING AS REQ	630	GLY
1	EA	DOOR BOTTOM	369AA LENGTH AS REQ	AA	ZER
1	EA	GASKETING	188S PSA H & J	BK	ZER

Hardware Group No. 305
PROVIDE EACH SGL DOOR(S) WITH THE FOLLOWING:

QTY		DESCRIPTION	CATALOG NUMBER	FINISH	MFR
3	EA	HINGE	5BB1 4.5 X 4.5	652	IVE
1	EA	PRIVACY LOCK	ND40S RHO	626	SCH
1	EA	SURFACE CLOSER	4050 RW/PA X MTG BRKT, SPCR & PLATE AS REQ	689	LCN
1	EA	PROTECTION PLATE	8400 10" X 2" LDW B-CS	630	IVE
1	EA	WALL STOP	WS406/407CCV	630	IVE
1	EA	GASKETING	328AA H & J	AA	ZER
1	EA	DOOR SWEEP	8198AA LENGTH AS REQ	AA	ZER
1	EA	THRESHOLD	65A LENGTH AS REQ	A	ZER

Hardware Group No. 307
PROVIDE EACH SGL DOOR(S) WITH THE FOLLOWING:

QTY		DESCRIPTION	CATALOG NUMBER	FINISH	MFR
3	EA	HINGE	5BB1 4.5 X 4.5	652	IVE
1	EA	PRIVACY LOCK	ND40S RHO	626	SCH
1	EA	OH STOP	900S SERIES X SIZE & MOUNTING AS REQ	630	GLY
1	EA	SURFACE CLOSER	4050 RW/PA X MTG BRKT, SPCR & PLATE AS REQ	689	LCN
1	EA	PROTECTION PLATE	8400 10" X 2" LDW B-CS	630	IVE
1	EA	WALL STOP	WS406/407CCV	630	IVE
1	EA	GASKETING	488S PSA H & J (USE SILENCERS @ NON-RATED DOORS)	BK	ZER

Hardware Group No. 401
PROVIDE EACH SGL DOOR(S) WITH THE FOLLOWING:

QTY		DESCRIPTION	CATALOG NUMBER	FINISH	MFR
3	EA	HINGE	5BB1 4.5 X 4.5	652	IVE
1	EA	PASSAGE SET	ND10S RHO	626	SCH
1	EA	SURFACE CLOSER	4050 RW/PA X MTG BRKT, SPCR & PLATE AS REQ	689	LCN
1	EA	PROTECTION PLATE	8400 10" X 2" LDW B-CS	630	IVE
1	EA	WALL STOP	WS406/407CCV	630	IVE
1	EA	GASKETING	488S PSA H & J (USE SILENCERS @ NON-RATED DOORS)	BK	ZER

Hardware Group No. 403
PROVIDE EACH SGL DOOR(S) WITH THE FOLLOWING:

QTY		DESCRIPTION	CATALOG NUMBER	FINISH	MFR
3	EA	HINGE	5BB1 4.5 X 4.5	652	IVE
1	EA	PASSAGE SET	ND10S RHO	626	SCH
1	EA	WALL STOP	WS406/407CCV	630	IVE
1	EA	GASKETING	488S PSA H & J (USE SILENCERS @ NON-RATED DOORS)	BK	ZER

Hardware Group No. 405
PROVIDE EACH SGL DOOR(S) WITH THE FOLLOWING:

QTY		DESCRIPTION	CATALOG NUMBER	FINISH	MFR
3	EA	HINGE	5BB1 4.5 X 4.5	630	IVE
1	EA	PASSAGE SET	ND10S RHO	626	SCH
1	EA	SURFACE CLOSER	4050 RW/PA X MTG BRKT, SPCR & PLATE AS REQ	689	LCN
1	EA	PROTECTION PLATE	8400 10" X 2" LDW B-CS	630	IVE
1	EA	WALL STOP	WS406/407CCV	630	IVE
1	EA	RAIN DRIP	142A DW + 4" (OMIT AT COVERED SPACES)	AA	ZER
1	SET	SEALS	328AA H & J	AL	ZER
1	EA	GASKETING	488S PSA H & J (USE SILENCERS @ NON-RATED DOORS)	BK	ZER
1	EA	DOOR SWEEP	8198AA LENGTH AS REQ	AA	ZER
1	EA	THRESHOLD	65A LENGTH AS REQ	A	ZER

Hardware Group No. 405S
PROVIDE EACH SGL DOOR(S) WITH THE FOLLOWING:

QTY		DESCRIPTION	CATALOG NUMBER	FINISH	MFR
3	EA	HINGE	5BB1 4.5 X 4.5	652	IVE
1	EA	PASSAGE SET	ND10S RHO	626	SCH
1	EA	OH STOP	900S SERIES X SIZE & MOUNTING AS REQ	630	GLY
1	EA	SURFACE CLOSER	4050 RW/PA X MTG BRKT, SPCR & PLATE AS REQ	689	LCN
1	EA	PROTECTION PLATE	8400 10" X 2" LDW B-CS	630	IVE
1	EA	GASKETING	328AA H & J	AA	ZER
1	EA	DOOR SWEEP	8198AA LENGTH AS REQ	AA	ZER
1	EA	THRESHOLD	65A LENGTH AS REQ	A	ZER

Hardware Group No. 407
PROVIDE EACH SGL DOOR(S) WITH THE FOLLOWING:

QTY		DESCRIPTION	CATALOG NUMBER	FINISH	MFR
3	EA	HINGE	5BB1 4.5 X 4.5	652	IVE
1	EA	PASSAGE SET	ND10S RHO	626	SCH
1	EA	OH STOP	900S SERIES X SIZE & MOUNTING AS REQ	630	GLY
1	EA	SURFACE CLOSER	4050 RW/PA X MTG BRKT, SPCR & PLATE AS REQ	689	LCN
1	EA	PROTECTION PLATE	8400 10" X 2" LDW B-CS	630	IVE
1	EA	GASKETING	488S PSA H & J (USE SILENCERS @ NON-RATED DOORS)	BK	ZER

Hardware Group No. 500S3
PROVIDE EACH PR DOOR(S) WITH THE FOLLOWING:

QTY		DESCRIPTION	CATALOG NUMBER	FINISH	MFR
6	EA	HINGE	5BB1 4.5 X 4.5	652	IVE
2	EA	MANUAL FLUSH BOLT	FB458-12"	626	IVE
1	EA	DUST PROOF STRIKE	DP2	626	IVE
1	EA	CLASSROOM LOCK	ND70D (MATCH EXISTING CORE TYPE)	626	SCH
1	EA	PERMANENT CORE	MATCH EXISTING KEYWAY	626	SAR
1	EA	OH STOP	900S SERIES X SIZE & MOUNTING AS REQ	630	GLY
2	EA	SURFACE CLOSER	4050 RW/PA X MTG BRKT, SPCR & PLATE AS REQ	689	LCN
2	EA	PROTECTION PLATE	8400 10" X 1" LDW B-CS	630	IVE
1	EA	WALL STOP	WS406/407CCV	630	IVE
1	EA	GASKETING	488S PSA H & J (USE SILENCERS @ NON-RATED DOORS)	BK	ZER
1	EA	ASTRAGAL	339AA	AA	ZER

Hardware Group No. 501
PROVIDE EACH SGL DOOR(S) WITH THE FOLLOWING:

QTY		DESCRIPTION	CATALOG NUMBER	FINISH	MFR
3	EA	HINGE	5BB1 4.5 X 4.5	652	IVE
1	EA	CLASSROOM LOCK	ND70D (MATCH EXISTING CORE TYPE)	626	SCH
1	EA	PERMANENT CORE	MATCH EXISTING KEYWAY	626	SAR
1	EA	SURFACE CLOSER	4050 RW/PA X MTG BRKT, SPCR & PLATE AS REQ	689	LCN
1	EA	PROTECTION PLATE	8400 10" X 2" LDW B-CS	630	IVE
1	EA	WALL STOP	WS406/407CCV	630	IVE
1	EA	GASKETING	488S PSA H & J (USE SILENCERS @ NON-RATED DOORS)	BK	ZER

Hardware Group No. 501I
PROVIDE EACH SGL DOOR(S) WITH THE FOLLOWING:

QTY		DESCRIPTION	CATALOG NUMBER	FINISH	MFR
3	EA	HINGE	5BB1 4.5 X 4.5	652	IVE
1	EA	CLASSROOM LOCK	ND70D (MATCH EXISTING CORE TYPE)	626	SCH
1	EA	PERMANENT CORE	MATCH EXISTING KEYWAY	626	SAR
1	EA	SURFACE CLOSER	4050 RW/PA X MTG BRKT, SPCR & PLATE AS REQ	689	LCN
1	EA	PROTECTION PLATE	8400 10" X 2" LDW B-CS	630	IVE
1	EA	WALL STOP	WS406/407CCV	630	IVE
1	EA	GASKETING	328AA H & J	AA	ZER
1	EA	DOOR SWEEP	8198AA LENGTH AS REQ	AA	ZER
1	EA	THRESHOLD	65A LENGTH AS REQ	A	ZER

Hardware Group No. 503
PROVIDE EACH SGL DOOR(S) WITH THE FOLLOWING:

QTY		DESCRIPTION	CATALOG NUMBER	FINISH	MFR
3	EA	HINGE	5BB1 4.5 X 4.5	652	IVE
1	EA	CLASSROOM LOCK	ND70D (MATCH EXISTING CORE TYPE)	626	SCH
1	EA	WALL STOP	WS406/407CCV	630	IVE
1	EA	GASKETING	488S PSA H & J (USE SILENCERS @ NON-RATED DOORS)	BK	ZER

Hardware Group No. 505
PROVIDE EACH SGL DOOR(S) WITH THE FOLLOWING:

QTY		DESCRIPTION	CATALOG NUMBER	FINISH	MFR
3	EA	HINGE	5BB1HW 4.5 X 4.5 NRP	630	IVE
1	EA	CLASSROOM LOCK	ND70D (MATCH EXISTING CORE TYPE)	626	SCH
1	EA	PERMANENT CORE	MATCH EXISTING KEYWAY	626	SAR
1	EA	SURFACE CLOSER	4050 SCUSH X MTG BRKT, SPCR & PLATE AS REQ	689	LCN
1	EA	PROTECTION PLATE	8400 10" X 2" LDW B-CS	630	IVE
1	EA	RAIN DRIP	142A DW + 4" (OMIT AT COVERED SPACES)	AA	ZER
1	EA	GASKETING	328AA H & J	AA	ZER
1	EA	DOOR SWEEP	8198AA LENGTH AS REQ	AA	ZER
1	EA	THRESHOLD	65A LENGTH AS REQ	A	ZER

Hardware Group No. 505.1
PROVIDE EACH SGL DOOR(S) WITH THE FOLLOWING:

QTY		DESCRIPTION	CATALOG NUMBER	FINISH	MFR
3	EA	HINGE	5BB1HW 4.5 X 4.5 NRP	630	IVE
1	EA	CLASSROOM LOCK	ND70D (MATCH EXISTING CORE TYPE)	626	SCH
1	EA	PERMANENT CORE	MATCH EXISTING KEYWAY	626	SAR
1	EA	SURFACE CLOSER	4050 RW/PA X MTG BRKT, SPCR & PLATE AS REQ	689	LCN
1	EA	PROTECTION PLATE	8400 10" X 2" LDW B-CS	630	IVE
1	EA	RAIN DRIP	142A DW + 4" (OMIT AT COVERED SPACES)	AA	ZER
1	EA	GASKETING	328AA H & J	AA	ZER
1	EA	DOOR SWEEP	8198AA LENGTH AS REQ	AA	ZER
1	EA	THRESHOLD	65A LENGTH AS REQ	A	ZER

Hardware Group No. 505HI
PROVIDE EACH SGL DOOR(S) WITH THE FOLLOWING:

QTY		DESCRIPTION	CATALOG NUMBER	FINISH	MFR
2	EA	HINGE	5BB1HW 4.5 X 4.5 NRP	630	IVE
1	EA	CLASSROOM LOCK	ND70D (MATCH EXISTING CORE TYPE)	626	SCH
1	EA	PERMANENT CORE	MATCH EXISTING KEYWAY	626	SAR
1	EA	OH STOP & HOLDER	100H	630	GLY
1	EA	SURFACE CLOSER	4050 RW/PA X MTG BRKT, SPCR & PLATE AS REQ	689	LCN
1	EA	PROTECTION PLATE	8400 10" X 2" LDW B-CS	630	IVE
1	EA	GASKETING	328AA H & J	AA	ZER
1	EA	DOOR SWEEP	8198AA LENGTH AS REQ	AA	ZER
1	EA	THRESHOLD	655A WIDTH X LENGTH AS REQ	A	ZER

Hardware Group No. 711C
PROVIDE EACH SGL DOOR(S) WITH THE FOLLOWING:

QTY		DESCRIPTION	CATALOG NUMBER	FINISH	MFR
3	EA	HINGE	5BB1HW 4.5 X 4.5	652	IVE
1	EA	PANIC HARDWARE	LD-99-L-NL LENGTH AS REQ	626	VON
1	EA	RIM CYLINDER	MATCH EXISTING CORE TYPE X CONSTRUCTION CORE	626	SAR
1	EA	PERMANENT CORE	MATCH EXISTING KEYWAY	626	SAR
1	EA	SURFACE CLOSER	4050 SCUSH X MTG BRKT, SPCR & PLATE AS REQ	689	LCN
1	EA	PROTECTION PLATE	8400 10" X 2" LDW B-CS	630	IVE
3	EA	SILENCER	SR64	GRY	IVE

Hardware Group No. 735
PROVIDE EACH SGL DOOR(S) WITH THE FOLLOWING:

QTY		DESCRIPTION	CATALOG NUMBER	FINISH	MFR
3	EA	HINGE	5BB1HW 4.5 X 4.5	630	IVE
1	EA	PANIC HARDWARE	99-L-BE-06 LENGTH AS REQ	626	VON
1	EA	SURFACE CLOSER	4050 RW/PA X MTG BRKT, SPCR & PLATE AS REQ	689	LCN
1	EA	PROTECTION PLATE	8400 10" X 2" LDW B-CS	630	IVE
1	EA	WALL STOP	WS406/407CCV	630	IVE
1	EA	RAIN DRIP	142A DW + 4" (OMIT AT COVERED SPACES)	AA	ZER
1	EA	GASKETING	328AA H & J	AA	ZER
1	EA	GASKETING	488SBK PSA H & J	BK	ZER
1	EA	DOOR SWEEP	8198AA LENGTH AS REQ	AA	ZER
1	EA	THRESHOLD	65A LENGTH AS REQ	A	ZER

Hardware Group No. C205
PROVIDE EACH SGL DOOR(S) WITH THE FOLLOWING:

QTY		DESCRIPTION	CATALOG NUMBER	FINISH	MFR
3	EA	HINGE	5BB1HW 4.5 X 4.5 NRP	630	IVE
1	EA	POWER TRANSFER	EPT10 CON	689	VON
1	EA	PANIC HARDWARE	LD-33A-NL	626	VON
1	EA	PERMANENT CORE	MATCH EXISTING KEYWAY	626	SAR
1	EA	SURFACE CLOSER	4050 SCUSH X MTG BRKT, SPCR & PLATE AS REQ	689	LCN
1	EA	PROTECTION PLATE	8400 10" X 2" LDW B-CS	630	IVE
1	EA	RAIN DRIP	142A DW + 4" (OMIT AT COVERED SPACES)	AA	ZER
1	EA	GASKETING	328AA H & J	AA	ZER
1	EA	DOOR SWEEP	8198AA LENGTH AS REQ	AA	ZER
1	EA	THRESHOLD	65A LENGTH AS REQ	A	ZER
1	EA	HARNESS (IN DOOR)	ALLEGION CONNECT TYPE & LENGTH AS REQ		SCH
1	EA	HARNESS (TO POWER SUPPLY)	CON-6W (CONNECTION LEADS)		SCH
1	EA	CREDENTIAL READER	CREDENTIAL READER BY ANOTHER SECTION		
1	EA	DOOR CONTACT	679-05 TYPE AS REQ	WHT	SCE
1	EA	POWER SUPPLY	PS902 120/240 VAC (COORDINATE POWER SUPPLIES WITH SECURITY PRIOR TO SUBMITTAL. OMIT WHERE PROVIDED BY SECURITY)	LGR	SCE

OPERATIONAL DESCRIPTION:
-DOOR NORMALLY CLOSED AND LOCKED.
-ENTRANCE BY VALID CARD READ OR MANUAL KEY OVERRIDE.
-FREE EGRESS AT ALL TIME BY PUSH PADS.
-UPON POWER FAILURE, DOOR TO REMAIN LOCKED.

Hardware Group No. C711AV
PROVIDE EACH SGL DOOR(S) WITH THE FOLLOWING:

QTY		DESCRIPTION	CATALOG NUMBER	FINISH	MFR
1	EA	CONT. HINGE	112XY HEIGHT AS REQ	628	IVE
1	EA	POWER TRANSFER	EPT10 CON	689	VON
1	EA	ELEC PANIC HARDWARE	RX-QEL-33A-NL-OP-CON LENGTH AS REQ	626	VON
1	EA	MORTISE CYLINDER	MATCH EXISTING CORE TYPE X CONSTRUCTION CORE	626	SAR
1	EA	RIM CYLINDER	MATCH EXISTING CORE TYPE X CONSTRUCTION CORE	626	SAR
2	EA	PERMANENT CORE	MATCH EXISTING KEYWAY	626	SAR
1	EA	90 DEG OFFSET PULL	8190-O 10"	630	IVE
1	EA	SURFACE CLOSER	4050 SCUSH X MTG BRKT, SPCR & PLATE AS REQ	689	LCN
1	EA	WALL STOP	WS406/407CCV	630	IVE
1	SET	SEAL	PERIMETER SEAL BY FRAME MANUFACTURER		
1	EA	HARNESS (IN DOOR)	ALLEGION CONNECT TYPE & LENGTH AS REQ		SCH
1	EA	HARNESS (TO POWER SUPPLY)	CON-6W (CONNECTION LEADS)		SCH
1	EA	CREDENTIAL READER	CREDENTIAL READER BY ANOTHER SECTION		
1	EA	POWER SUPPLY	PS902 120/240 VAC (COORDINATE POWER SUPPLIES WITH SECURITY PRIOR TO SUBMITTAL. OMIT WHERE PROVIDED BY SECURITY)	LGR	SCE

Hardware Group No. C715A
PROVIDE EACH SGL DOOR(S) WITH THE FOLLOWING:

QTY		DESCRIPTION	CATALOG NUMBER	FINISH	MFR
1	EA	CONT. HINGE	112XY EPT HEIGHT AS REQ	628	IVE
1	EA	POWER TRANSFER	EPT10 CON	689	VON
1	EA	ELEC PANIC HARDWARE	RX-QEL-33A-NL-OP-CON LENGTH AS REQ	626	VON
1	EA	RIM CYLINDER	MATCH EXISTING CORE TYPE X CONSTRUCTION CORE	626	SAR
1	EA	PERMANENT CORE	MATCH EXISTING KEYWAY	626	SAR
1	EA	90 DEG OFFSET PULL	8190-O 10"	630	IVE
1	EA	SURFACE CLOSER	4050 SCUSH X MTG BRKT, SPCR & PLATE AS REQ	689	LCN
1	SET	SEAL	PERIMETER SEAL BY FRAME MANUFACTURER		
1	EA	DOOR SWEEP	8198AA LENGTH AS REQ	AA	ZER
1	EA	THRESHOLD	65A LENGTH AS REQ	A	ZER
1	EA	HARNESS (IN DOOR)	ALLEGION CONNECT TYPE & LENGTH AS REQ		SCH
1	EA	HARNESS (TO POWER SUPPLY)	CON-6W (CONNECTION LEADS)		SCH
1	EA	CREDENTIAL READER	CREDENTIAL READER BY ANOTHER SECTION		
1	EA	DOOR CONTACT	679-05 TYPE AS REQ	WHT	SCE
1	EA	POWER SUPPLY	PS902 120/240 VAC (COORDINATE POWER SUPPLIES WITH SECURITY PRIOR TO SUBMITTAL. OMIT WHERE PROVIDED BY SECURITY)	LGR	SCE

OPERATIONAL DESCRIPTION:
-DOOR NORMALLY CLOSED AND LOCKED.
-ENTRANCE BY VALID CARD READ OR MANUAL KEY OVERRIDE.
-FREE EGRESS AT ALL TIME BY PUSH PADS.
-UPON POWER FAILURE, DOOR TO REMAIN LOCKED.

Hardware Group No. D205
PROVIDE EACH SGL DOOR(S) WITH THE FOLLOWING:

QTY		DESCRIPTION	CATALOG NUMBER	FINISH	MFR
3	EA	HINGE	5BB1HW 4.5 X 4.5 NRP	630	IVE
1	EA	STOREROOM LOCK	ND80D RHO (MATCH EXISTING CORE TYPE)	626	SCH
1	EA	PERMANENT CORE	MATCH EXISTING KEYWAY	626	SAR
1	EA	SURFACE CLOSER	4050 SCUSH X MTG BRKT, SPCR & PLATE AS REQ	689	LCN
1	EA	PROTECTION PLATE	8400 10" X 2" LDW B-CS	630	IVE
1	EA	RAIN DRIP	142A DW + 4" (OMIT AT COVERED SPACES)	AA	ZER
1	EA	GASKETING	328AA H & J	AA	ZER
1	EA	DOOR SWEEP	8198AA LENGTH AS REQ	AA	ZER
1	EA	THRESHOLD	65A LENGTH AS REQ	A	ZER
1	EA	DOOR CONTACT	679-05 TYPE AS REQ	WHT	SCE

Hardware Group No. D505A
PROVIDE EACH SGL DOOR(S) WITH THE FOLLOWING:

QTY		DESCRIPTION	CATALOG NUMBER	FINISH	MFR
3	EA	HINGE	5BB1HW 4.5 X 4.5 NRP	630	IVE
1	EA	CLASSROOM LOCK	8745.214.LxL.29L	US26D	ACC
1	EA	PERMANENT CORE	MATCH EXISTING KEYWAY	626	SAR
1	EA	SURFACE CLOSER	4050 SCUSH X MTG BRKT, SPCR & PLATE AS REQ	689	LCN
1	EA	RAIN DRIP	142A DW + 4" (OMIT AT COVERED SPACES)	AA	ZER
1	EA	GASKETING	328AA H & J	AA	ZER
1	EA	DOOR SWEEP	8198AA LENGTH AS REQ	AA	ZER
1	EA	THRESHOLD	65A LENGTH AS REQ	A	ZER
1	EA	DOOR CONTACT	679-05 TYPE AS REQ	WHT	SCE

Hardware Group No. D705A
PROVIDE EACH SGL DOOR(S) WITH THE FOLLOWING:

QTY		DESCRIPTION	CATALOG NUMBER	FINISH	MFR
1	EA	CONT. HINGE	112XY HEIGHT AS REQ	628	IVE
1	EA	PANIC HARDWARE	LD-33A-L LENGTH AS REQ	626	VON
1	EA	MORTISE CYLINDER	MATCH EXISTING CORE TYPE X CONSTRUCTION CORE	626	SAR
1	EA	PERMANENT CORE	MATCH EXISTING KEYWAY	626	SAR
1	EA	SURFACE CLOSER	4050 SCUSH X MTG BRKT, SPCR & PLATE AS REQ	689	LCN
1	SET	SEAL	PERIMETER SEAL BY FRAME MANUFACTURER		
1	EA	DOOR SWEEP	8198AA LENGTH AS REQ	AA	ZER
1	EA	THRESHOLD	65A LENGTH AS REQ	A	ZER
1	EA	DOOR CONTACT	679-05 TYPE AS REQ	WHT	SCE

Hardware Group No. D715
PROVIDE EACH SGL DOOR(S) WITH THE FOLLOWING:

QTY		DESCRIPTION	CATALOG NUMBER	FINISH	MFR
3	EA	HINGE	5BB1HW 4.5 X 4.5 NRP	630	IVE
1	EA	PANIC HARDWARE	99-NL LENGTH AS REQ	626	VON
1	EA	RIM CYLINDER	MATCH EXISTING CORE TYPE X CONSTRUCTION CORE	626	SAR
1	EA	PERMANENT CORE	MATCH EXISTING KEYWAY	626	SAR
1	EA	SURFACE CLOSER	4050 SCUSH X MTG BRKT, SPCR & PLATE AS REQ	689	LCN
1	EA	PROTECTION PLATE	8400 10" X 2" LDW B-CS	630	IVE
1	EA	RAIN DRIP	142A DW + 4" (OMIT AT COVERED SPACES)	AA	ZER
1	EA	GASKETING	328AA H & J	AA	ZER
1	EA	DOOR SWEEP	8198AA LENGTH AS REQ	AA	ZER
1	EA	THRESHOLD	65A LENGTH AS REQ	A	ZER
1	EA	DOOR CONTACT	679-05 TYPE AS REQ	WHT	SCE

END OF SECTION

Door#	HwSet#
5-101 A	D705A
5-101 B	205
5-101 C	711C
5-102 A	301
5-103 A	201
5-104 A	501I
5-105 A	500S3
5-106 A	D205
5-107 A	201
5-109 A	001
5-110 A	103
5-111 A	C715A
5-112 A	405S
5-113 A	C205
5-113 B	405
5-114 A	004
5-114 B	004
5-114 C	004
5-114 D	D715
5-114 E	D715
5-115 A	407
5-115 B	001
5-201 A	303G
5-201 B	303
5-203 A	303GS
5-204 A	303G
5-205 A	303GS
5-206 A	301
5-207 A	301
5-208 A	301
5-209 A	303GS
5-210 A	303G
5-211 A	303GS
5-213 A	401
5-214 A	201
5-215 A	403
5-217 A	405
5-217 B	C205
5-219 A	503
5-220 A	503
5-221 A	503
5-223 A	D505A
5-301 B	505HI
11-101 A	C711AV
11-101 B	C715A
11-102 A	103
11-103 A	C205
11-103 B	405
11-104 A	503
11-105 A	503

Door#	HwSet#
11-106 A	503
11-107 A	301
11-108 A	D505A
11-112 A	201
11-113 A	C205
11-113 B	405
11-114 A	303G
11-114 B	303G
11-116 A	303GS
11-116 B	303
11-117 A	303G
11-118 A	303GS
11-119 A	303GS
11-120 A	303GS
11-121 A	303GS
11-122 A	303G
11-123 A	401
11-124 A	201
11-125 A	301
11-126 A	301
11-127 A	307
11-128 A	C715A
11-128 B	403
11-128 C	403
11-129 A	001
11-129 B	001
11-129 C	001
11-129 D	001
11-129 E	004
11-129 F	004
11-129 G	004
11-129 H	004
11-129 J	D715
11-130 A	001
11-131 A	D205
11-132 A	305
11-133 A	401
11-135 A	501
11-136 A	735
11-136 B	C205
11-137 A	505.1
11-137 B	001
11-140 A	001
11-140 B	505
11-140 C	001
11-141 A	205
11-141 B	205

SECTION 26 51 15 – Ceiling Fans

PART 1 - GENERAL

1.01 SUMMARY

A. This Section includes ceiling mounted fans.

B. Related Sections:
1. 09 21 16 Gypsum Board Assemblies
2. 09 51 00 Acoustical Ceilings

C. Submittals: Submit properly identified manufacturer's catalog cuts and technical data before ordering and installing products.

D. Quality Assurance
1. Fans to be installed, supported and balanced, per manufacturers recommendations.

PART 2 - PRODUCTS

2.01 MANUFACTURERS

B. Ceiling Mounted Fans (@ Day Room, Exercise and Outdoor Patio):
1. Kichler Lighting, Arkwright Collection
   a. Model: 300146 AP with blade kit 370029AP
   b. Style: Antique Pewter Finish with white Blades
   c. Accessories:
      i. No light kit installed
      ii. 3-Speed wall switch controller (no remote control device)
2. Approved equivalent

PART 3 - EXECUTION

3.01 INSTALLATION

A. Install in accordance with manufacturer's recommendations. Prior to installation, all related work with in the area shall be accepted as complete.
B. Downrod trim shall be flushed with acoustical ceiling.
C. Protect equipment upon installation from damage, debris and dirt.
D. Perform final clean upon substantial completion of project. Equipment shall be brought to new condition.

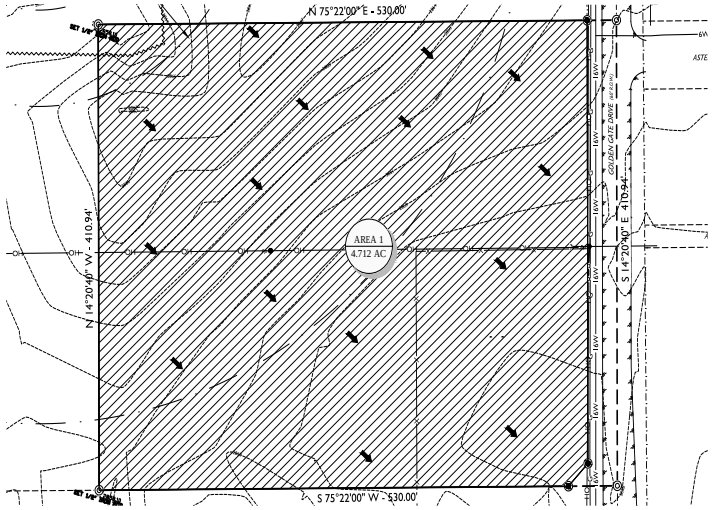

1 PRE-DEVELOPMENT CONDITIONS
N.T.S.

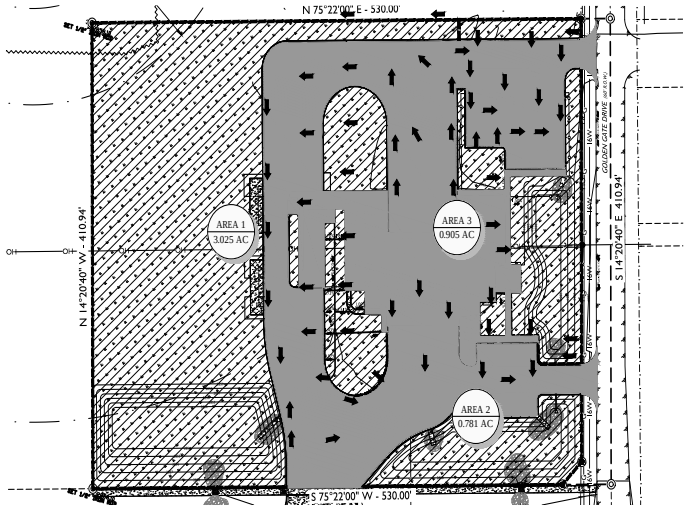

2 POST-DEVELOPMENT CONDITIONS
N.T.S.

Area (sf)	CN	Description
40,076	98	Paved parking, HSG B
91,717	61	>75% Grass cover, Good, HSG B
131,793	72	Weighted Average
91,717		69.59% Pervious Area
40,076		30.41% Impervious Area

Tc (min)	Length (feet)	Slope (ft/ft)	Velocity (ft/sec)	Capacity (cfs)	Description
32.4	633		0.33		Direct Entry, CALCULATED SCS

Subcatchment 6S: Watershed Area 1

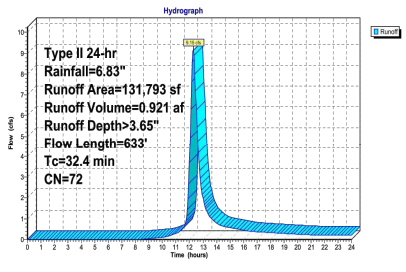

Area (sf)	CN	Description
20,903	98	Paved parking, HSG B
13,125	61	>75% Grass cover, Good, HSG B
34,028	84	Weighted Average
13,125		38.57% Pervious Area
20,903		61.43% Impervious Area

Tc (min)	Length (feet)	Slope (ft/ft)	Velocity (ft/sec)	Capacity (cfs)	Description
32.4	633		0.33		Direct Entry, CALCULATED SCS

Subcatchment 7S: Watershed Area 2

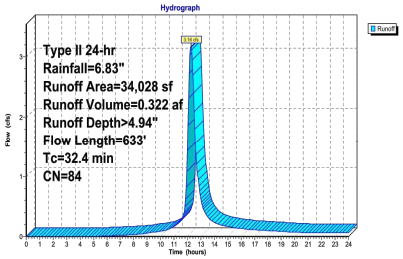

Area (sf)	CN	Description
22,527	98	Paved parking, HSG B
16,907	61	>75% Grass cover, Good, HSG B
39,434	82	Weighted Average
16,907		42.87% Pervious Area
22,527		57.13% Impervious Area

Tc (min)	Length (feet)	Slope (ft/ft)	Velocity (ft/sec)	Capacity (cfs)	Description
32.4	633		0.33		Direct Entry, CALCULATED SCS

Subcatchment 8S: Watershed Area 3

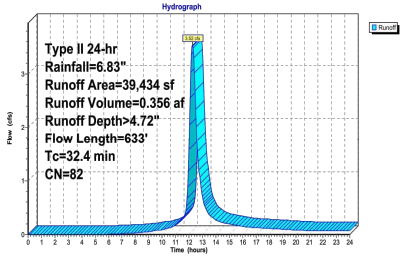

3 POST-DEVELOPMENT HYDROGRAPHS
N.T.S.

Pond 3P: Southwest Basin

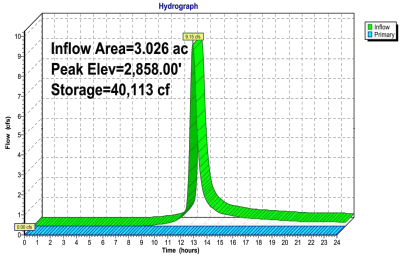

Pond 9P: Southeast Basin

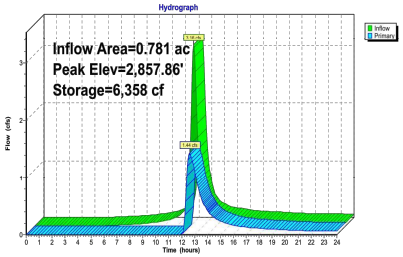

Pond 10P: East Basin

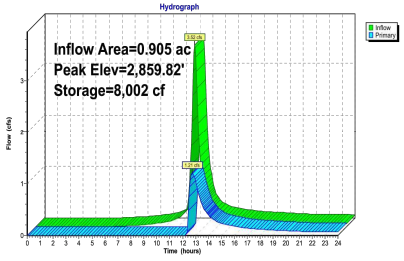

4 POST-DEVELOPMENT BASIN HYDROGRAPHS
N.T.S.

LEGEND

- DENOTES FOUND MONUMENT AS NOTED
- DENOTES SET 1/2" IRON ROD W/PLASTIC CAP MARKED "CTLS"
- DENOTES TEMPORARY BENCHMARK
- DENOTES EXISTING FIRE HYDRANT
- DENOTES EXISTING WATER VALVE
- DENOTES EXISTING MANHOLE
- DENOTES EXISTING GUY ANCHOR
- DENOTES EXISTING POWER POLE
- 2850 DENOTES EXISTING CONTOUR
- DENOTES BOUNDARY LINE
- DENOTES SURROUNDING PROPERTY
- DENOTES EXISTING FLOODWAY
- DENOTES EDGE OF ASPHALT
- OH DENOTES EXISTING OVERHEAD ELECTRIC LINE
- DENOTES EXISTING FENCE
- G DENOTES EXISTING GAS LINE
- CB DENOTES EXISTING UNDERGROUND CABLE LINE
- W DENOTES EXISTING WATER LINE
- 6W DENOTES EXISTING 6" WATER LINE
- 8W DENOTES EXISTING 8" WATER LINE
- 16W DENOTES EXISTING 16" WATER LINE
- 36W DENOTES EXISTING 36" WATER LINE
- DENOTES WATERSHED BOUNDARY
- DENOTES DRAINAGE FLOW DIRECTION
- AREA 1 / 5.00 AC DENOTES WATERSHED ID
- DENOTES WATERSHED AREA
- DENOTES IMPERVIOUS AREA
- DENOTES LANDSCAPE AREA

811 Know what's below. Call before you dig.

DRAINAGE NOTES:

- PRE-DEVELOPMENT WATERSHEDS: THE SITE WAS ANALYZED AS A SINGLE WATERSHED. THE EXISTING SITE IS CURRENTLY DRAINING TOWARDS THE EXISTING CITY RIGHT-OF-WAY. DRAINAGE AREA 1 WAS MODELED WITH A CURVE NUMBER OF 66. CONSISTING OF PERVIOUS NATURAL DESERT SURFACES, THIS RESULTS IN THE EXISTING PEAK DISCHARGE OF 10.81 CFS.
- POST-DEVELOPMENT WATERSHEDS: THE SITE WAS ANALYZED AS 3 WATERSHEDS. DRAINAGE AREA 1 WAS MODELED WITH A WEIGHTED CURVE NUMBER OF 72, BEING A MIX OF IMPERVIOUS AND LANDSCAPE SURFACES. DRAINAGE AREA 1 HAS A PEAK DISCHARGE OF 9.15 CFS. DRAINAGE AREA 2 WAS MODELED WITH A WEIGHTED CURVE NUMBER OF 84, BEING A MIX OF IMPERVIOUS AND LANDSCAPE SURFACES. DRAINAGE AREA 2 HAS A PEAK DISCHARGE OF 3.16 CFS. DRAINAGE AREA 3 WAS MODELED WITH A WEIGHTED CURVE NUMBER OF 82, BEING A MIX OF IMPERVIOUS AND LANDSCAPE SURFACES. DRAINAGE AREA 3 HAS A PEAK DISCHARGE OF 3.52 CFS. THIS REPRESENTS AN INCREASE OF 5.02 CFS OVER EXISTING CONDITIONS. TOTAL PEAK DISCHARGE FOR POST DEVELOPMENT IS 15.83 CFS.
- DRAINAGE AREA IMPROVEMENTS: DISCHARGE FROM DRAINAGE AREA 1 IS REDUCED FROM FROM 9.15 CFS TO 0.00 CFS. DISCHARGE FROM DRAINAGE AREA 2 IS REDUCED FROM FROM 3.16 CFS TO 1.44 CFS. DISCHARGE FROM DRAINAGE AREA 3 IS REDUCED FROM FROM 3.52 CFS TO 1.21 CFS.
- SOIL TYPE: WEBSOILSURVEY REPORTS THE SOILS IN THIS AREA TO BE PRIMARILY AMARILLO FIND SANDY LOAM (HYDROLOGIC SOIL GROUP B).
- LANDSCAPE %: THE LANDSCAPE PERCENTAGE WAS CALCULATED USING THE SITE AREA MINUS THE BUILDING FOOT PRINT. THE LANDSCAPE PERCENTAGE WAS FOUND TO BE APPROXIMATELY 59.31% OF THIS AREA.
- TIME OF CONCENTRATION: FOR PRE DEVELOPMENT FLOW THE TIME OF CONCENTRATION WAS CALCULATED TO BE 36.3 MINUTES. FOR POST DEVELOPMENT FLOW THE TIME OF CONCENTRATION WAS CALCULATED TO BE 32.4 MINUTES.
- DRAINAGE CALCULATIONS WERE PERFORMED WITH HYDROCAD SOFTWARE.
- RAINFALL DEPTH DURATION WAS TAKEN FROM TABLE 4-10 IN THE CITY OF MIDLAND DRAINAGE MANUAL, PAGE 4-32, DATED 6/92. (6.83 IN., 100YR, 24 HR STORM)

FEMA NOTE:

FLOOD STATEMENT: ACCORDING TO FEMA'S N.F.I.P. FLOOD INSURANCE RATE MAP #48329C0068F, DATED SEPTEMBER 16, 2005, THIS PROPERTY IS WITHIN THE UNSHADED PORTION OF ZONE "X", DESIGNATED AS "AREAS DETERMINED TO BE OUTSIDE THE 0.2% ANNUAL CHANCE FLOODPLAIN."

THIS FLOOD STATEMENT DOES NOT IMPLY THAT THE PROPERTY AND/OR THE STRUCTURES THEREON WILL BE FREE FROM FLOODING OR FLOOD DAMAGE. ON RARE OCCASIONS, GREATER FLOODS CAN AND WILL OCCUR AND FLOOD HEIGHTS MAY BE INCREASED BY MAN-MADE OR NATURAL CAUSES.

MAVERICK ENGINEERING
1909 West Wall Street, Suite "K"
Midland, Texas 79701 TBPE#: F-15089
Tel: (432) 262-0999 Fax: (432) 262-0989
www.Maverick-Engr.com

NO.	REVISIONS	BY	APPR.	DATE
1				

DRAWN BY: CLB
CHECKED BY: ALM
APPROVED BY: ALM
DATE: 05/14/2019
JOB: 180218

DRAINAGE PLAN - BASINS
FIRE STATION 11
LOT 01, BLOCK 01, LLANO COUNTRY ADDITION, AN ADDITION TO THE CITY OF MIDLAND, MIDLAND COUNTY, TEXAS.

STATE OF TEXAS
ANDREW L. MELLEN
106572
LICENSED
PROFESSIONAL ENGINEER
01/17/2020

SHEET C241 OF 19

4.1583

© COPYRIGHT 2018 ALL RIGHTS RESERVED

F:\2018\180218-MARTINEZ, ARCHITECTS-FIRE STATION 11 CWD\3-DRAWINGS\CIVIL CONSTRUCTION PLANS\180218 C241 DRAINAGE PLAN - BASINS.DWG

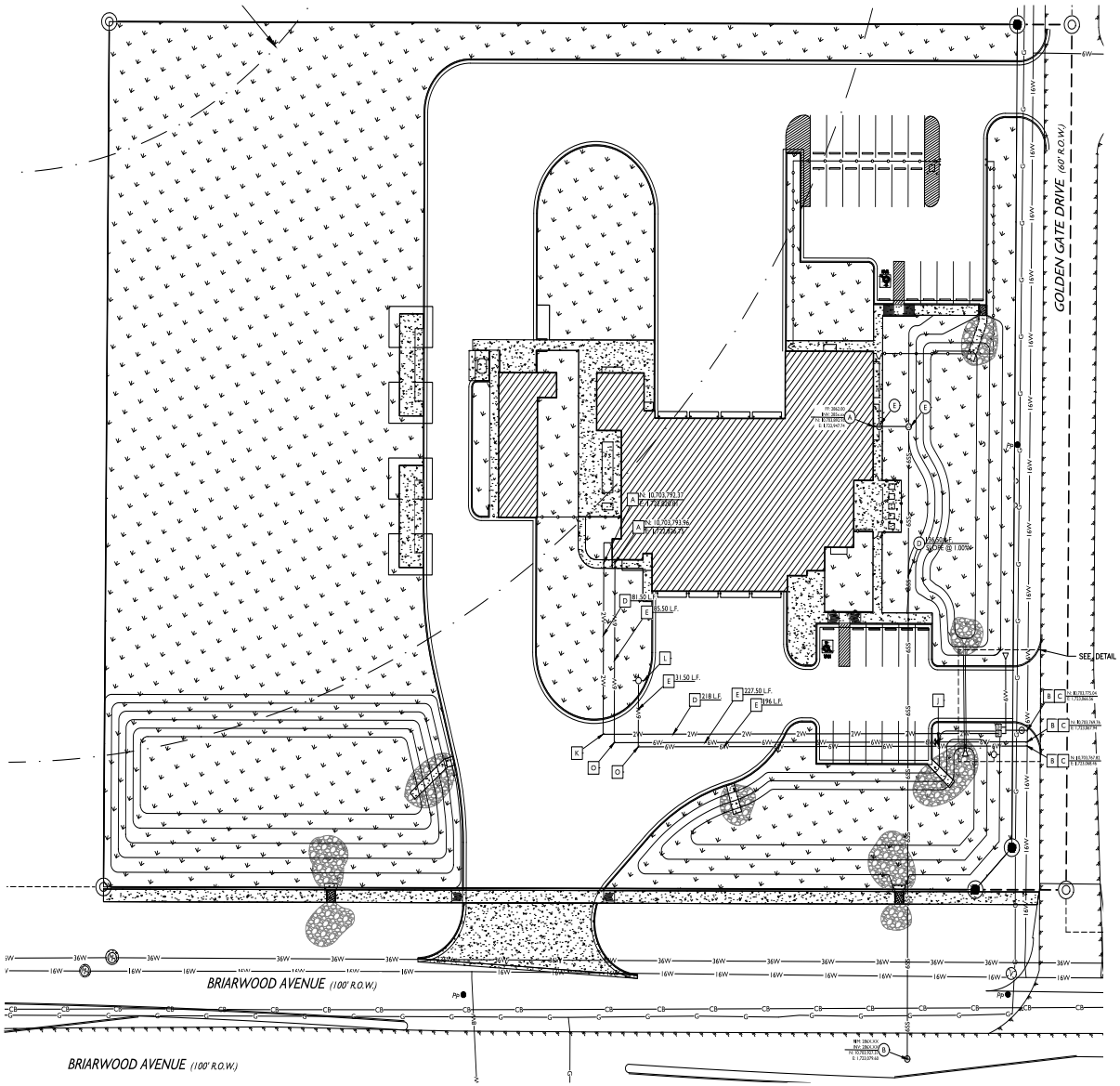

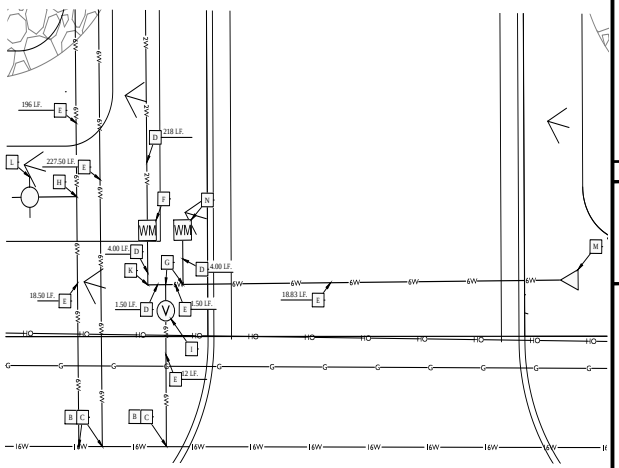

DETAIL A
SCALE 1:5

0' 30' 60' 90'
SCALE 1" = 30'

LEGEND

- DENOTES FOUND MONUMENT AS NOTED
- DENOTES SET 1/2" IRON ROD W/PLASTIC CAP MARKED "CTLS"
- DENOTES TEMPORARY BENCHMARK
- DENOTES EXISTING FIRE HYDRANT
- DENOTES EXISTING WATER VALVE
- DENOTES EXISTING MANHOLE
- DENOTES EXISTING GUY ANCHOR
- DENOTES EXISTING POWER POLE
- 2850 DENOTES EXISTING CONTOUR
- DENOTES BOUNDARY LINE
- DENOTES SURROUNDING PROPERTY
- DENOTES EXISTING FLOODWAY
- DENOTES EDGE OF ASPHALT
- OH DENOTES EXISTING OVERHEAD ELECTRIC LINE
- DENOTES EXISTING FENCE
- G DENOTES EXISTING GAS LINE
- CB DENOTES EXISTING UNDERGROUND CABLE LINE
- W DENOTES EXISTING WATER LINE
- 6W DENOTES EXISTING 6" WATER LINE
- 8W DENOTES EXISTING 8" WATER LINE
- 16W DENOTES EXISTING 16" WATER LINE
- 36W DENOTES EXISTING 36" WATER LINE
- DENOTES PROPOSED FIRE HYDRANT
- DENOTES PROPOSED POST INDICATOR VALVE
- IM DENOTES PROPOSED IRRIGATION METER
- WM DENOTES PROPOSED WATER METER
- V DENOTES PROPOSED WATER VALVE
- CO DENOTES PROPOSED SEWER CLEANOUT
- MH DENOTES PROPOSED SEWER MANHOLE
- DENOTES PROPOSED CAP
- GM DENOTES PROPOSED GAS METER
- 2W DENOTES PROPOSED 2" WATER LINE
- 6W DENOTES PROPOSED 6" WATER LINE
- 6SS DENOTES PROPOSED 6" SEWER LINE
- FL DENOTES PROPOSED FIRE LINE

ENGINEER'S UTILITY NOTES:

- CONTRACTOR TO VERIFY ALL EXISTING UTILITY TIE-IN CONNECTIONS AND VERIFY LOCATION AND ELEVATION PRIOR TO CONSTRUCTION.
- CONTRACTOR TO BUILD SEWER FROM TIE-IN POINT (A.K.A. DOWNHILL) AND PROCEED UPHILL.
- CITY OF MIDLAND TO BE NOTIFIED 48 HOURS BEFORE ANY CONSTRUCTION BEGINS.
- PIPE DEFLECTION IS TO BE PER MANUFACTURER'S RECOMMENDATIONS OR PER CITY REQUIREMENTS, WHICHEVER ALLOWS THE LESSER AMOUNT OF DEFLECTION.
- ALL UTILITIES TO BE INSTALLED PER TEXAS ADMINISTRATIVE CODE (TAC) STANDARD SEPARATION SPECIFICATIONS.
- A TWO (2) FOOT MINIMUM VERTICAL SEPARATION IS TO BE PROVIDED BETWEEN ANY SEWER MAIN/LINE CROSSING A WATER MAIN/LINE.
- EXCEPTIONS OR DEVIATIONS FROM THE ABOVE MINIMUM CLEARANCES MUST BE APPROVED AND SHOWN ON THE APPROVED WATER AND SEWER PLANS. WHEN UTILITY CONFLICTS ARE FOUND DURING CONSTRUCTION, ALL CHANGES AND REVISIONS MUST BE PRECEDED BY AN APPROVED PLAN REVISION,
- ANY AND ALL MORE STRINGENT REQUIREMENTS REQUIRED BY FEDERAL, STATE, COUNTY OR LOCAL CODES OR ORDINANCES TAKE PRECEDENCE.
- ALL CONSTRUCTION IN THE RIGHT OF WAY IS TO CONFORM TO THE CITY OF MIDLAND STANDARDS.
- ALL CONSTRUCTION ON SITE IS TO CONFORM TO MAVERICK ENGINEERING NOTES AND DETAIL SHEETS.
- CONCRETE OR ASPHALT DAMAGED DURING THE COURSE OF CONSTRUCTION IS TO BE REMOVED AND REPLACED WITH LIKE MATERIALS TO THE SATISFACTION OF THE ENGINEER OR THE CITY OF MIDLAND PRIOR TO FINAL INSPECTION.
- SANITARY SEWER IS TO BE PVC-SDR-35 UNLESS NOTED OTHERWISE.
- WATER IS TO BE C-900 PVC PIPE UNLESS NOTED OTHERWISE.
- THE CONTRACTOR IS TO PROVIDE ALL THRUST BLOCKING AT ALL FITTINGS AND BENDS AS REQUIRED. COMPLY WITH DETAILS IN THE CITY OF MIDLAND'S DESIGN & CONSTRUCTION STANDARDS.
- THE CONTRACTOR IS TO KEEP ALL EXISTING WATER AND SEWER MAINS IN SERVICE DURING CONSTRUCTION.
- ANY PROPOSED GAS LINES SHOWN ARE FOR SCHEMATIC PLANNING PURPOSES ONLY. ACTUAL GAS LINE ROUTES ARE TO BE NEGOTIATED BETWEEN THE CONTRACTOR AND THE GAS UTILITY PROVIDER. MAVERICK ENGINEERING DOES NOT ENGAGE IN GAS LINE DESIGN. PLEASE CONSULT WITH YOUR M.E.P. PLAN PROVIDER AND GAS UTILITY PROVIDER FOR GAS LINE DESIGN.

UTILITY SEWER NOTES:

TYP. A. SEE M.E.P. PLANS FOR CONTINUATION.

B. INSTALL MANHOLE PER CITY OF MIDLAND DETAILS 313(A) & 313(B)

C. CONTRACTOR TO VERIFY UTILITY SIZE, LOCATION, ELEVATION AND TYPE PRIOR TO CONSTRUCTION AND INFORM ENGINEER OF CONFLICTS.

D. CONSTRUCT 6" DIAMETER SEWER SERVICE LINE. LENGTH AND SLOPE OF LINE PER PLANS. LINE IS TO BE SDR-35 OR APPROVED EQUAL. TRENCHING AND BEDDING PER CITY OF MIDLAND DETAILS 310(A) & 310(B) ON SHEET C320.

E. INSTALL TWO WAY (DOUBLE) CLEANOUT PER DETAIL 01 ON SHEET C320.

UTILITY WATER NOTES:

TYP. A. SEE M.E.P. PLANS FOR CONTINUATION. CONTRACTOR TO VERIFY LOCATION PRIOR TO CONSTRUCTION.

B. CONTRACTOR TO VERIFY UTILITY SIZE, LOCATION, ELEVATION AND TYPE PRIOR TO CONSTRUCTION AND INFORM ENGINEER OF CONFLICTS.

C. INSTALL 16X6" TAPPING SLEEVE AND VALVE PER CITY OF MIDLAND DETAIL 602 ON SHEET 310.

D. CONSTRUCT 2" DIAMETER WATER SERVICE LINE AS SHOWN. LENGTH OF LINE PER PLANS. LINE IS TO BE SCHEDULE 40 PVC OR APPROVED EQUAL. TRENCHING AND BEDDING PER CITY OF MIDLAND DETAIL 310 (A&B) ON SHEET 310.

E. CONSTRUCT 6" DIAMETER FIRE SERVICE LINE AS SHOWN. LENGTH OF LINE PER PLANS. LINE IS TO BE C-900 DR14 OR APPROVED EQUAL. TRENCHING AND BEDDING PER CITY OF MIDLAND DETAIL CITY OF MIDLAND DETAILS F03(A) & F03(B) ON SHEET C311.

F. INSTALL 2" WATER METER PER CITY OF MIDLAND DETAILS 604(A) & 604(B) ON SHEET C310.

G. CONSTRUCT 6"x2" REDUCING TEE WITH THRUST BLOCKING PER CITY OF MIDLAND DETAIL 615 ON SHEET C311.

H. CONSTRUCT 6"x6" TEE WITH THRUST BLOCKING PER CITY OF MIDLAND DETAIL 615 ON SHEET C311

I. INSTALL 6" GATE VALVE PER CITY OF MIDLAND DETAILS 608(A) & 608(B) ON SHEET C310.

J. INSTALL POST INDICATOR VALVE PER CITY OF MIDLAND DETAIL F01 ON SHEET C311.

K. CONSTRUCT 2" 90° BEND WITH RESTRAINED JOINT SYSTEM ON EACH END (PRIVATE UTILITY) / THRUST BLOCKING PER CITY OF MIDLAND DETAIL 616 ON SHEET C311 (PUBLIC UTILITY).

L. INSTALL FIRE HYDRANT WITH VALVE PER CITY OF MIDLAND DETAIL 603 ON SHEET C310.

M. INSTALL 2" CAP WITH THRUST BLOCKING PER CITY OF MIDLAND DETAIL 617 ON SHEET C310

N. INSTALL 2" IRRIGATION METER PER CITY OF MIDLAND DETAILS 604(A) AND 604(B) ON SHEET C310.

O. CONSTRUCT 6' 90° BEND WITH RESTRAINED JOINT SYSTEM ON EACH END (PRIVATE UTILITY) / THRUST BLOCKING PER CITY OF MIDLAND DETAIL 616 ON SHEET C311 (PUBLIC UTILITY).

MAVERICK ENGINEERING
1909 West Wall Street, Suite "K"
Midland, Texas 79701 FIRM: F-15089
Tel: (432) 262-0993 Fax: (432) 262-0989
www.Maverick-Engr.com

NO.	BY:	APPR.	DATE

REVISIONS

DRAWN BY: CLB
CHECKED BY: ALM
APPROVED BY: ALM
DATE: 05/14/2019
JOB: 180218

UTILITY PLAN

FIRE STATION 11
LOT 01, BLOCK 01, LLANO COUNTRY ADDITION,
AN ADDITION TO THE CITY OF MIDLAND,
MIDLAND COUNTY, TEXAS.

STATE OF TEXAS
ANDREW L. MELLEN
106572
LICENSED
PROFESSIONAL ENGINEER
01/11/2020

SHEET C300 OF 19

4.1584

© COPYRIGHT 2018 ALL RIGHTS RESERVED

F:\2018\180218-MARTINEZ_ARCHITECTS-FIRE STATION 11 CIVIL\3-DRAWINGS\CIVIL CONSTRUCTION PLANS\180218 C300 UTILITY PLAN.DWG

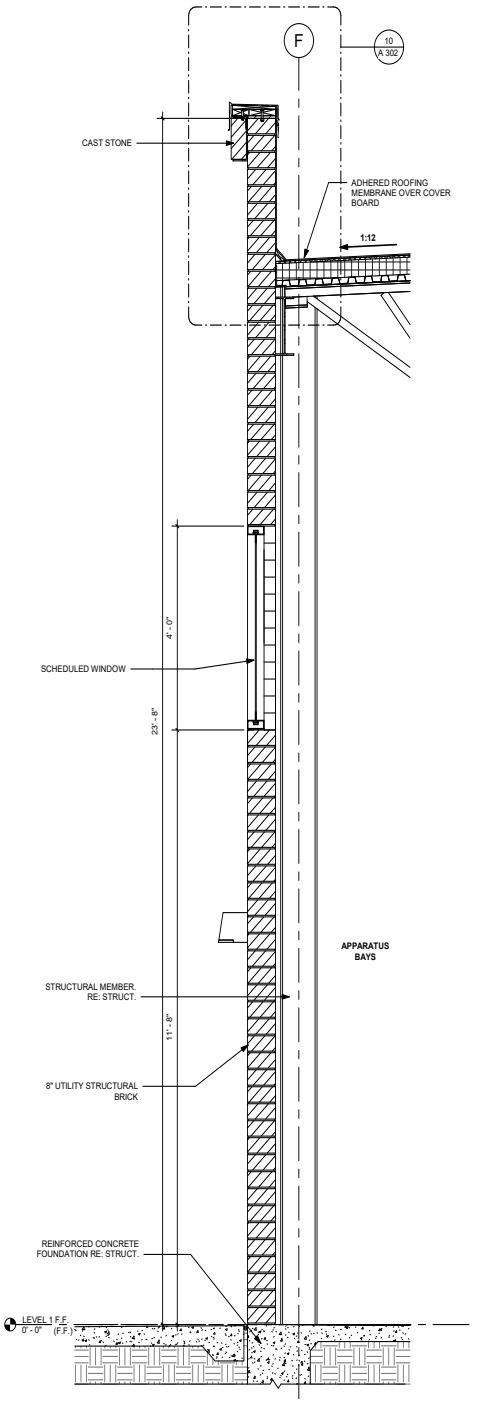

1 WALL SECTION
SCALE: 3/4" = 1'-0"

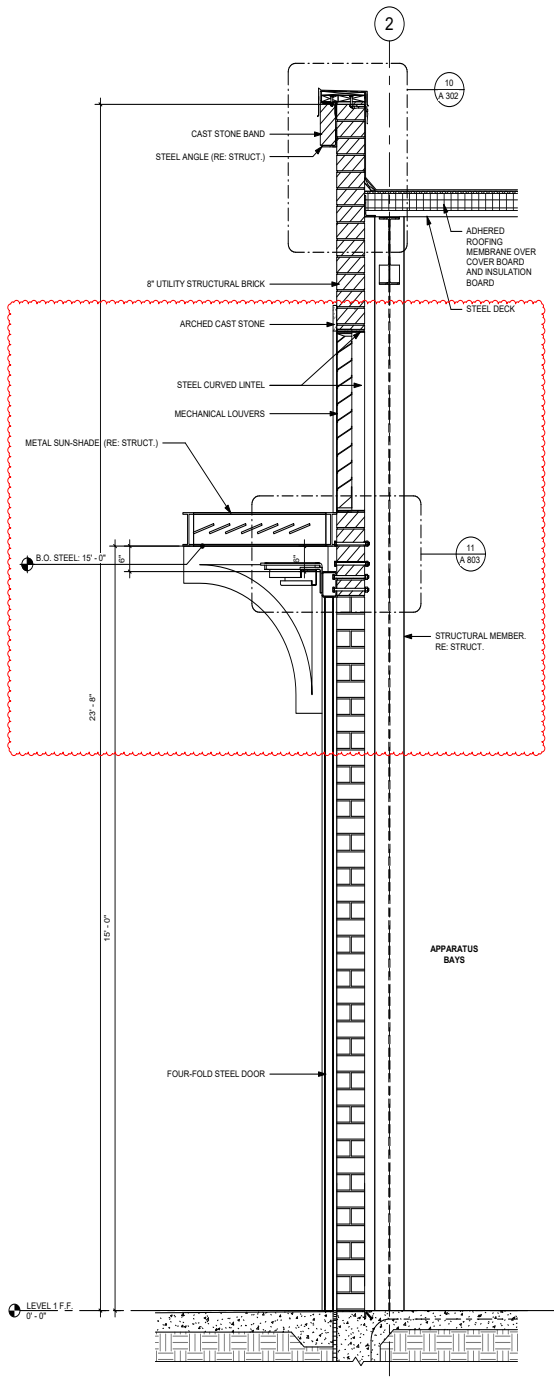

2 WALL SECTION
SCALE: 3/4" = 1'-0"

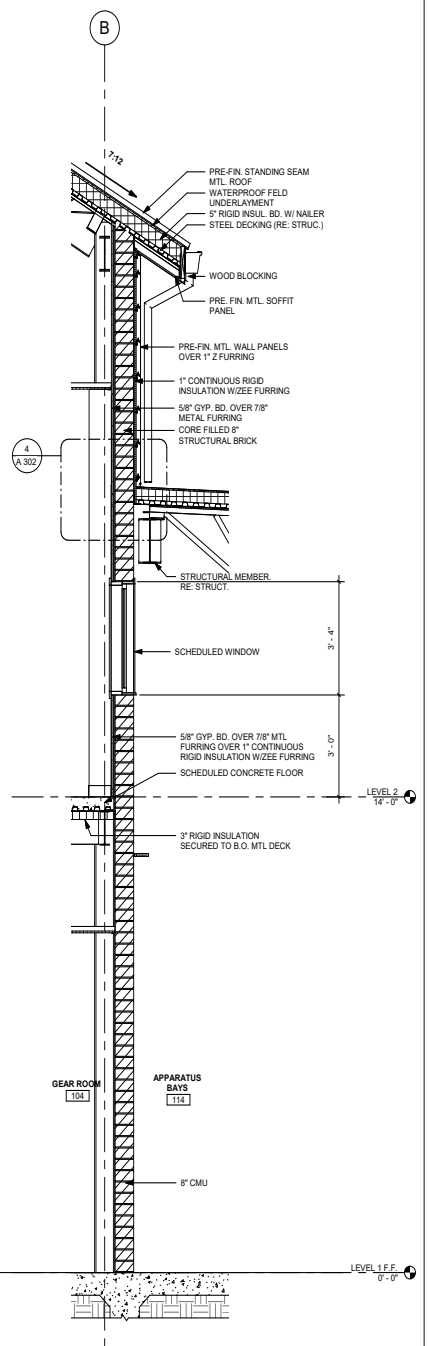

3 WALL SECTION
SCALE: 1/2" = 1'-0"

4.1585

PROFESSIONAL SEAL

REGISTERED ARCHITECT
JUSTIN E. MYERS
24640
STATE OF TEXAS
10-JAN-2020

LOGO/CONTACT

martinez ARCHITECTS

Martinez Architect, LP
900 Rockmead, Suite 250
Houston, Texas 77339
281.346.7371

DESIGN TEAM

Architectural
Martinez Architects

Civil Engineer
Maverick Engineering

Structural
Matrix Structural Engineers

M/E/P/T
DBR

Landscape Architect
KDC Associates

FIRE STATION #5

CITY OF MIDLAND
2210 W GOLF COURSE RD
MIDLAND, TX 79701

PROJECT No: **MA 18017**
DATE: **16-JAN-2020**

ISSUE

75% CONSTRUCTION DOCUMENT
26-JUN-2019

100% ISSUE FOR PERMIT
30-JUL-2019

100% ISSUE FOR BID
30-JAN-2020

WALL SECTIONS

A 501

ENLARGED PLAN GENERAL NOTES

A. INSTALL CURBS AT NON-ACCESSIBLE SHOWERS.
B. INSTALL ALL PLUMBING ACCESS PANELS NOT TO CONFLICT W/ TOILET ACCESSORIES.
C. COORDINATE ALL TOILET ACCESSORIES AND INSTALLATION w/ ARCHITECT/OWNER. ALL ACCESSORIES TO HAVE TUMBLER LATCH KNOB (NO KEYED LOCKS)
D. SHEET G001 FOR TYPICAL ACCESSIBLE DIMENSIONS & MOUNTING HEIGHTS.

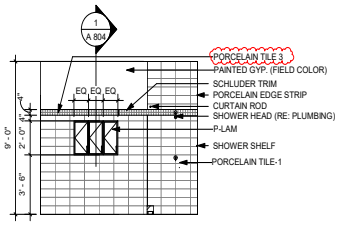

20 RESTROOM 208
SCALE: 1/4" = 1'-0"

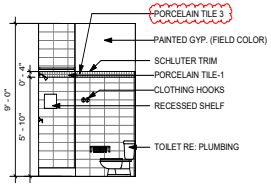

16 RESTROOM 208
SCALE: 1/4" = 1'-0"

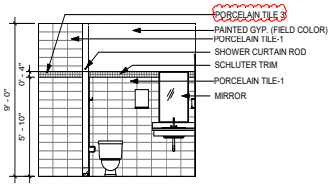

12 RESTROOM 208
SCALE: 1/4" = 1'-0"

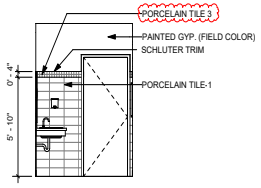

8 RESTROOM 208
SCALE: 1/4" = 1'-0"

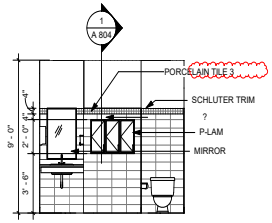

19 RESTROOM 207
SCALE: 1/4" = 1'-0"

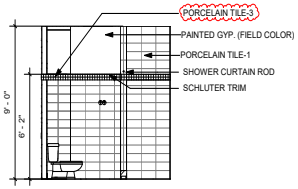

15 RESTROOM 207
SCALE: 1/4" = 1'-0"

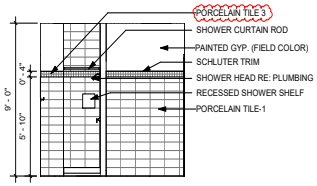

11 RESTROOM 207
SCALE: 1/4" = 1'-0"

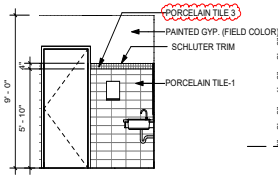

7 RESTROOM 207
SCALE: 1/4" = 1'-0"

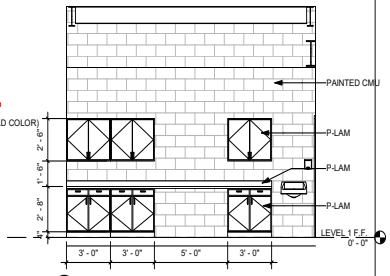

3 SHOP 105
SCALE: 1/4" = 1'-0"

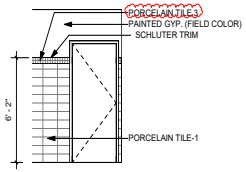

18 RESTROOM 206
SCALE: 1/4" = 1'-0"

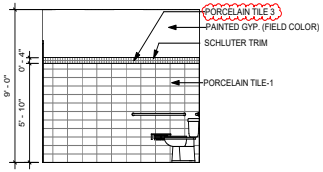

14 RESTROOM 206
SCALE: 1/4" = 1'-0"

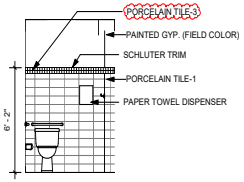

10 RESTROOM 206
SCALE: 1/4" = 1'-0"

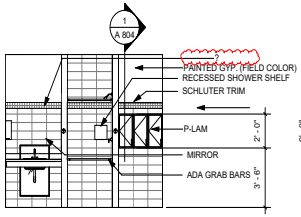

6 RESTROOM 206
SCALE: 1/4" = 1'-0"

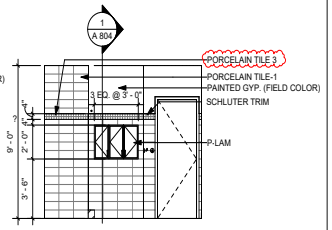

2 RESTROOM 202
SCALE: 1/4" = 1'-0"

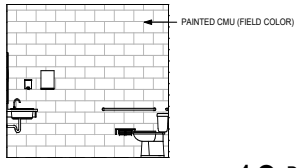

17 DECON
SCALE: 1/4" = 1'-0"

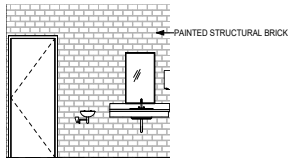

13 DECON
SCALE: 1/4" = 1'-0"

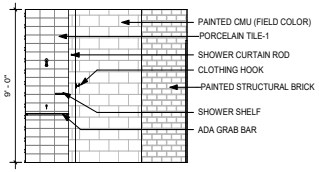

9 DECON
SCALE: 1/4" = 1'-0"

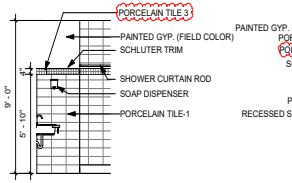

5 RESTROOM 202
SCALE: 1/4" = 1'-0"

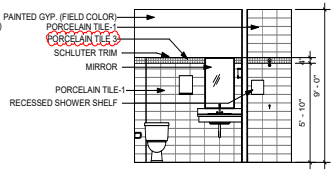

1 RESTROOM 202
SCALE: 1/4" = 1'-0"

4.1586

PROFESSIONAL SEAL

REGISTERED ARCHITECT JUSTIN E. MYRICK 24840 STATE OF TEXAS
30-JAN-2020

LOGO/CONTACT

martinez ARCHITECTS

Martinez Architect, LP
900 Rockmead, Suite 250
Houston, Texas 77339
281.346.7371

DESIGN TEAM

Architectural
Martinez Architects

Civil Engineer
Maverick Engineering

Structural
Matrix Structural Engineers

M/E/P/T
DBR

Landscape Architect
KDC Associates

FIRE STATION #5
CITY OF MIDLAND
2210 W GOLF COURSE RD
MIDLAND, TX 79701

PROJECT No: **MA 18017**
DATE: **16-JAN-2020**

ISSUE
75% CONSTRUCTION DOCUMENT 26-JUN-2019
100% ISSUE FOR PERMIT 30-JUL-2019
100% ISSUE FOR BID 30-JAN-2020

INTERIOR ELEVATIONS

A 602

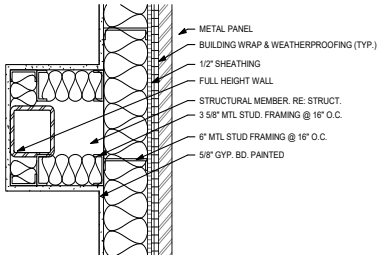

9 ENLARGED PLAN DETAIL
SCALE: 1 1/2" = 1'-0"

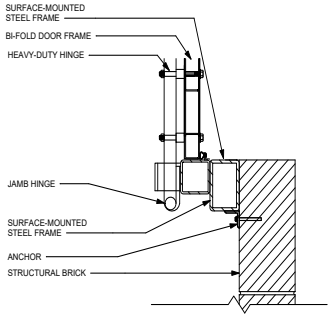

10 FOUR-FOLD DOOR/ JAMB
SCALE: 1 1/2" = 1'-0"

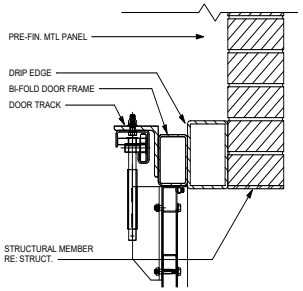

11 FOUR-FOLD DOOR/ HEAD
SCALE: 1 1/2" = 1'-0"

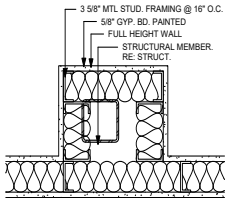

5 ENLARGED PLAN DETAIL
SCALE: 1 1/2" = 1'-0"

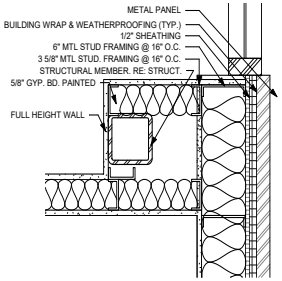

6 ENLARGED PLAN DETAIL
SCALE: 1 1/2" = 1'-0"

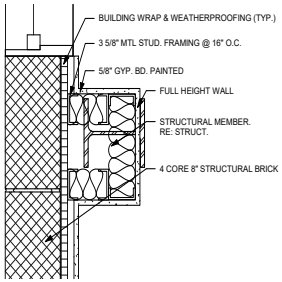

7 ENLARGED PLAN DETAIL
SCALE: 1 1/2" = 1'-0"

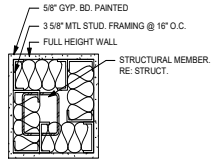

8 ENLARGED PLAN DETAIL
SCALE: 1 1/2" = 1'-0"

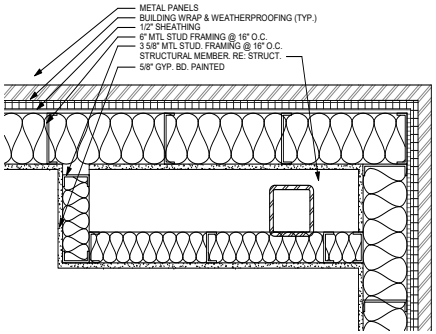

1 ENLARGED PLAN DETAIL
SCALE: 1 1/2" = 1'-0"

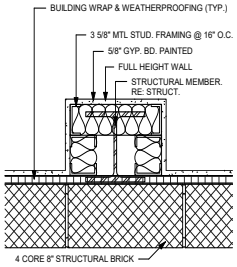

2 ENLARGED PLAN DETAIL
SCALE: 1 1/2" = 1'-0"

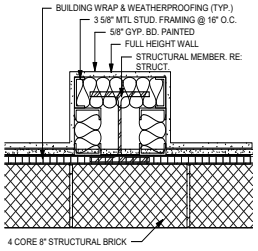

3 ENLARGED PLAN DETAIL
SCALE: 1 1/2" = 1'-0"

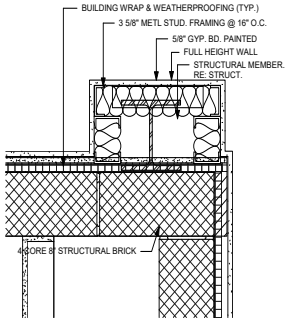

4 ENLARGED PLAN DETAIL
SCALE: 1 1/2" = 1'-0"

4.1587

PROFESSIONAL SEAL

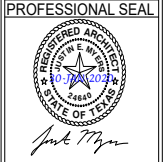

LOGO/CONTACT

martinez ARCHITECTS
Martinez Architect, LP
900 Rockmead, Suite 250
Houston, Texas 77339
281.346.7371

DESIGN TEAM

Architectural
Martinez Architects

Civil Engineer
Maverick Engineering

Structural
Matrix Structural Engineers

M/E/P/T
DBR

Landscape Architect
KDC Associates

FIRE STATION #5
CITY OF MIDLAND
2210 W GOLF COURSE RD
MIDLAND, TX 79701

PROJECT No: **MA 18017**
DATE: **16-JAN-2020**

ISSUE
75% CONSTRUCTION DOCUMENT 26-JUN-2019
100% ISSUE FOR PERMIT 30-JUL-2019
100% ISSUE FOR BID 30-JAN-2020

PLAN DETAILS

A 803

FINISH SCHEDULE

#	ROOM NAME	FLOOR								BASE		WALL								CEILING FINISH				HEIGHT	FINISH REMARKS
		CARPET TILE	PORCELAIN TILE - 1	PORCELAIN TILE - 2	LUXURY VINYL TILE - 1	LUXURY VINYL TILE - 2	ABRASION & SLIP RESISTANT CONCRETE FLOOR FINISH	SEALED CONCRETE	RUBBER ATHLETIC FLOORING	VULCANIZED RUBBER COVER BASE	PORCALAIN TILE COVE BASE	PAINT ON CMU/ STRUCTURAL BRICK (FIELD COLOR)	PAINT ON GYP. BD (FIELD COLOR)	PAINT ON GYP. BD. (ACCENT COLOR)	METAL LINER PANELS (PRE-FINISHED)	PORCELAIN FIELD WALL TILE (PT-1)	PORCELAIN ACCENT TILE-3 (PT-3)	FIBER-REINFORCED PLASTIC	PAINT ON WATER-RESISTANT/FIRE RATED PLYWOOD	TEGULAR EDGED LAY-IN ACOUSTICAL PANEL (WHITE)	SQUARE EDGED LAY-IN SCRUBBABLE CERAMIC ACOUSTICAL PANEL (WHITE)	PAINTED GYPSUM BOARD	PAINTED EXPOSED STRUCTURE & MEP		
101	ENTRY				•					•			•										•		10' - 0"	
102	DECON.						•					•										•			9' - 0"	
103	STORAGE						•					•										•			8' - 0"	
104	GEAR ROOM						•					•									•				10' - 0"	
105	SHOP + SCBA EQUIPMENT						•					•												•	13' - 7"	
106	FIRE RISER/PUMP						•					•												•	· 7"	
107	ELECTRICAL							•				•												•	10' - 0"	
108	STAIRWAY				•					•			•								•				12' - 0"	
109	YARD STORAGE						•					•												•	· 7"	
110	OFFICE				•					•			•								•				10' - 0"	
111	HALLWAY				•					•			•								•				10' - 0"	
112	UTILITY						•					•									•				10' - 0"	
113	AIR LOCK						•					•									•				10' - 0"	
114	APPARATUS BAYS						•					•												•	· 3"	
115	EXERCISE								•	•		•									•				10' - 0"	
201	DORM 1				•					•			•								•				9' - 0"	
202	RR		•										•				•	•				•	•		9' - 0"	
203	DORM 2				•					•			•								•				9' - 0"	
204	DORM 3				•					•			•								•				9' - 0"	
205	DORM 4				•					•			•								•				9' - 0"	
206	ADA RR		•										•				•	•				•	•		9' - 0"	
207	RR		•										•				•	•				•	•		9' - 0"	
208	RR		•										•				•	•				•	•		9' - 0"	
209	DORM 5				•					•			•								•				9' - 0"	
210	DORM 6				•					•			•								•				9' - 0"	
211	DORM 7				•					•			•								•				9' - 0"	
212	HALLWAY				•					•			•								•				12' - 0"	
213	UTILITY							•					•								•				9' - 0"	
214	IT							•					•											•	· 1"	
215	DAY ROOM				•					•			•								•		•		11' - 0"	11' CEILING FURR DOWN. RE: A702
216	WORK STATIONS				•					•			•								•				9' - 6"	
217	AIR LOCK				•					•			•								•				8' - 0"	
218	EXIT HALLWAY				•					•			•								•				· 1"	
219	PANTRY 1				•					•			•								•				8' - 0"	
220	PANTRY 2				•					•			•								•				8' - 0"	
221	PANTRY 3				•					•			•								•				8' - 0"	
222	KITCHEN				•					•			•								•		•		12' - 0"	
223	DINING ROOM				•					•			•								•		•		11' - 0"	
224	PATIO							•																•	14' - 0"	
225	STORAGE MEZZANINE							•					•											•	16' - 0"	
301	RAPPELLING LEVEL							•		•			•											•	· 1"	
302	RAPPELLING PLATFORM							•																	· 1"	

NOTES

1. All finish material colors/patterns/styles to be determined by architect from manufacturer's full range of colors. All hollow metal door frames shall be painted.
2. RE: Specifications for additional finish information & requirements.
3. All exposed steel framing (interior & exterior) shall be painted.
4. Provide corner guards at all outside gyp. bd. corners
5. All cabinets shall be wood laminated U.N.O.
6. All countertops shall be solid surface U.N.O.
7. RE: A701 for extent and height of ceiling furrdowns / transitions.
8. No wall base at interior masonry walls

PROFESSIONAL SEAL

REGISTERED ARCHITECT JUSTIN E. MYERS 24849 STATE OF TEXAS

10-JAN-2020

LOGO/CONTACT

martinez ARCHITECTS

Martinez Architect, LP
900 Rockmead, Suite 250
Houston, Texas 77339
281.346.7371

DESIGN TEAM

Architectural
Martinez Architects

Civil Engineer
Maverick Engineering

Structural
Matrix Structural Engineers

M/E/P/T
DBR

Landscape Architect
KDC Associates

FIRE STATION #5

CITY OF MIDLAND
2210 W GOLF COURSE RD
MIDLAND, TX 79701

PROJECT No: **MA 18017**
DATE: **16-JAN-2020**

ISSUE

75% CONSTRUCTION DOCUMENT
26-JUN-2019

100% ISSUE FOR PERMIT
30-JUL-2019

100% ISSUE FOR BID
30-JAN-2020

FINISH SCHEDULE

A 901

4.1588

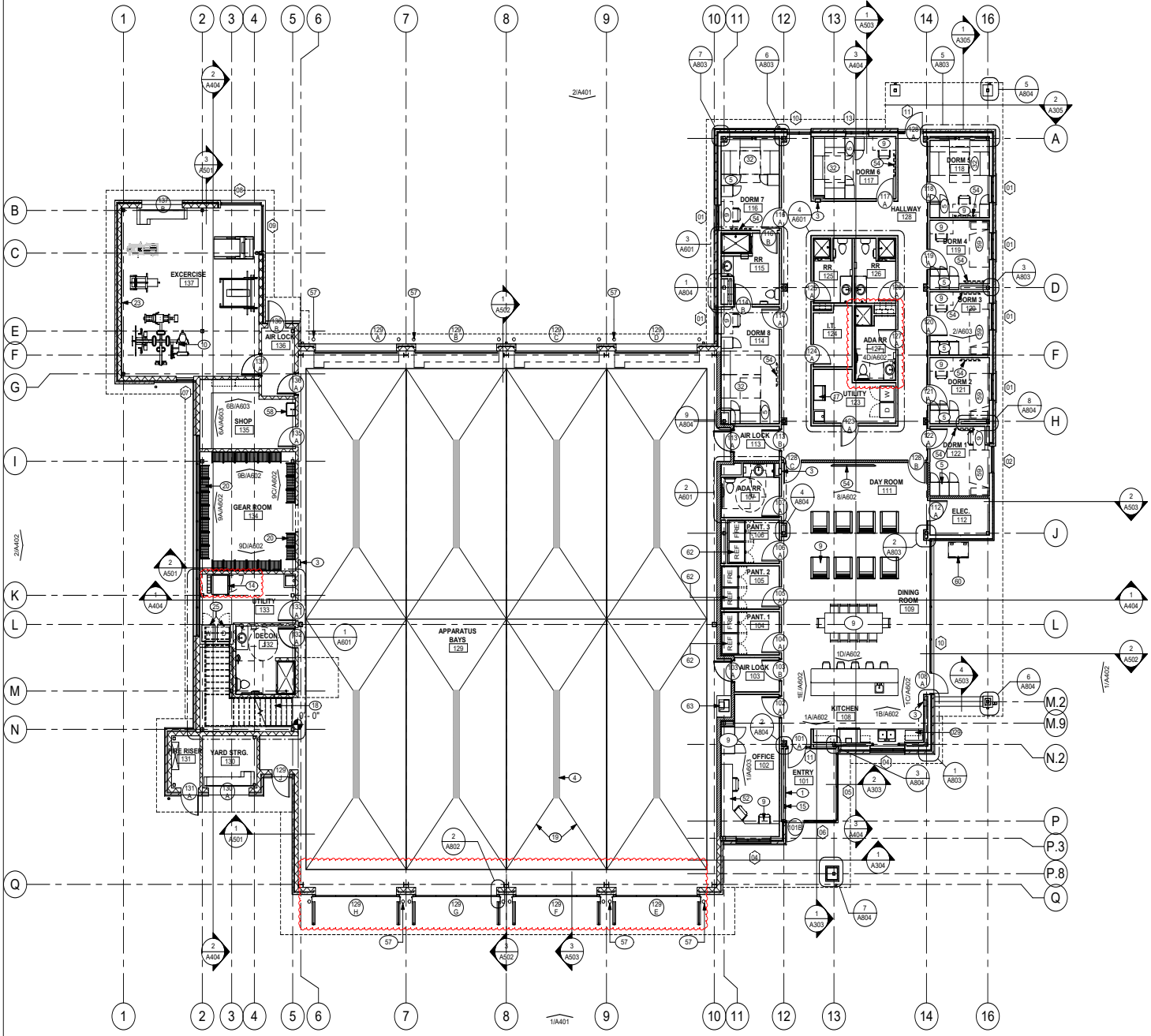

01 LEVEL 1
SCALE: 1/8" = 1'-0"

TRUE NORTH
PROJECT NORTH

GENERAL NOTES

A. SEE SHEET A205 FOR PARTITION TYPES.
B. BRACE ALL STUD WALLS BACK TO STRUCTURE AS REQ'D. STUD MANUFACTURER SHALL GAUGE ALL STUDS PER APPLICATION. SUBMIT ENGINEERED SHOP DRAWINGS FOR APPROVAL.
C. EXTEND & SEAL ALL FIRE RATED WALLS TO DECK. ENSURE AIR-TIGHT SEAL @ ALL EXTERIOR WALLS.
D. COMPLETELY FILL ALL EXTERIOR WALLS WITH INSULATION.
E. CONTRACTOR TO PROVIDE & INSTALL FIRE DEPARTMENT ACCESS BOX. COORDINATE BOX REQUIREMENTS AND MOUNTING LOCATION WITH FIRE MARSHAL PRIOR TO INSTALLATION. APPLICATION & APPROVAL REQ'D.
F. PROVIDE GROMMETS AT ALL CASEWORK KNEE SPACES.
G. ALL MATERIALS TESTING BY OWNER.
H. TESTING AND BALANCING OF MECHANICAL SYSTEMS SHALL BE PART OF BASE BID.
I. ALL BASE CABINET FILE DRAWERS TO BE CONSTRUCTED WITH PROPER WIDTH/DEPTH SO AS TO HOUSE FILING SYSTEM WITH SIDE RAILS TO ACCEPT HANGING FILE SYSTEM. SUBMIT DRAWER MOCKUP FOR ARCHITECT'S REVIEW AND APPROVAL PRIOR TO CONSTRUCTION/ INSTALLATION.
J. SUBSTITUTE DUROCK CEMENT BOARD FOR GYPSUM BOARD @ ALL CERAMIC WALL TILE LOCATIONS.
K. 60" H. PLASTIC CORNER GUARDS TO BE PROVIDED AT ALL GYP. BD. CORNERS EXCEPT THOSE AT COLUMN FURROUTS.
L. CONTRACTOR SHALL COORDINATE THE LOCATION OF ALL ELECTRICAL DEVICES & PLUMBING WITH MILLWORK, LOCKERS, ETC. ALL ELECTRICAL DEVICES & PLUMBING NOT COORDINATED WITH MILLWORK, LOCKERS, ETC. SHALL BE RELOCATED BY THE CONTRACTOR.
M. REFER TO SHEET G001 FOR TYPICAL CLEARANCES AT DOORS. ALL DOORS SHALL MEET THE REQUIREMENTS OF THIS DRAWING. IF A DOOR IS FOUND THAT DOES NOT MEET THESE REQUIREMENTS, CONTACT THE ARCHITECT PRIOR TO CONSTRUCTION.
N. PROVIDE WOOD BLOCKING IN WALLS AS REQUIRED AT ALL HANDRAILS, MILLWORK, EQUIPMENT, ETC. - VERIFY LOCATION OF ALL OWNER PROVIDED EQUIPMENT THAT WILL REQUIRE BLOCKING.
O. SLOPE AT FLOOR DRAINS SHALL NOT EXCEED 1:48 SLOPE IN AREAS OF ACCESSIBLE PATH OF TRAVEL.

WALL LEGEND

1-HR FIRE RATED WALL TO DECK - SEALED: RE TO G002

FLOOR PLAN KEYED NOTES

1 DEDICATION PLAQUE - RE 4/A905
3 FIRE EXTINGUISHER IN CABINET AT DRYWALL LOCATIONS, AND SURFACE MOUNTED AT CMU LOCATIONS
5 1-TIER P-LAM STORAGE LOCKERS (TYP. OF (3) @ EA. DORM ROOM)
9 FURNISHINGS BY OWNER
10 EXERCISE EQUIPMENT BY OWNER
14 65 LB UNIMAC EXTRACTOR BY OWNER VENDOR
15 CALLBOX SHALL PERMIT CALLING THE STATION PHONE OR DIALING 9-1-1
17 ICE MACHINE BY OWNER G.C. TO INSTALL
18 STEEL STAIR w/ CONCRETE TREADS
19 SLOPED CONC. FLOOR RE: STRUCT
20 WALL MOUNTED FULL-HEIGHT GEARGRID LOCKERS (24)
23 4' HIGH X FULL LENGTH WALL MIRROR @ 30" A.F.F.
25 RESIDENTIAL WASHER/ DRYER BY OWNER G.C. INSTALL
029 MICROWAVE. RE: ELEC.
32 WALL MOUNTED MURPHY BED (3 IN ROOM) (O.F.C.I.). CONTRACTOR TO VERIFY SIZE REQUIREMENTS OF BED w/ OWNER PRIOR TO INSTALLATION.
52 BUILT-IN-DESK, SEE ELEVATIONS
54 TV BY OWNER (PROVIDE BLOCKING). COORDINATE TV MOUNT REQUIREMENTS WITH OWNER OR PROVIDE SOLID PLYWOOD SHEATHING BLOCKING"
57 CONCRETE-FILLED STEEL PIPE BOLLARDS - RE: 6/A102
58 SERVICE SINK (RE: PLUMBING)
59 TWIN LX BED WITH UNDER-BED STORAGE
60 GAS GRILL (O.F.C.I.). PROVIDE NATURAL GAS LINE HOOK-UP
62 REFRIGERATOR AND FREEZER BY OWNER.
63 PRINTER AND TABLE BY OWNER.

PROFESSIONAL SEAL
REGISTERED ARCHITECT JUSTIN E. MYERS 24640 STATE OF TEXAS
JAN 16, 2020

LOGO/CONTACT
martinez ARCHITECTURE
Martinez Architect, LP
900 Rockmead, Suite 250
Houston, Texas 77339
281.346.7371

DESIGN TEAM
Architectural
Martinez Architects
Civil Engineer
Maverick Engineering
Structural
Matrix Structural engineers
M/E/P/T
DBR
Landscape Architect
KDC Associates

FIRE STATION #11
CITY OF MIDLAND
6600 BRIARWOOD AVE
MIDLAND, TX 79707

PROJECT No: MA 18017
DATE: 16-JAN-2020

ISSUE
100% DESIGN DEVELOPMENT 22-MAY-2019
75% CONSTRUCTION DOCUMENT 26-JUN-2019
100% ISSUE FOR PERMIT 30-JUL-2019
100% ISSUE FOR BIDDING 30-JAN-2020

LEVEL 1 - FIRE STATION

A201

4.1589

GENERAL NOTES

A. ROOFING MANUFACTURER TO SUBMIT DETAILED SHOP DRAWINGS SHOWING ALL ROOF EDGE AND CONNECTION DETAILS FOR ARCHITECT'S APPROVAL.
B. COLORS OF ALL EXTERIOR METAL TO BE SELECTED BY ARCHITECT FROM MANUFACTURER'S FULL RANGE.
C. RE: MEP DWGS. FOR ALL ROOF PENETRATIONS.
D. ROOFING MANUFACTURER / INSTALLER SHALL SUBMIT WEATHER-TIGHTNESS WARRANTY TO ARCHITECT FOR APPROVAL AS SPECIFIED.
E. APPROVED MANUFACTURER TO PROVIDE PRE-FINISHED METAL CANOPIES AND SUNSHADE DEVICES.
F. CONTRACTOR SHALL VERIFY AND COORDINATE ALL REQUIRED ROOF PENETRATIONS FOR ITEMS INDICATED ON M/E/P DRAWINGS THAT WILL PENETRATE ROOF.
G. REFER TO AND COMPLY WITH ARCHITECTURAL SHEET METAL MANUAL, LATEST EDITION, SMACNA.
H. GUTTERS AND DOWNSPOUTS SHALL BE PRE-FINISHED METAL.
I. REFER TO WALL SECTIONS FOR ROOF DETAILS

DS - DOWNSPOUT LOCATION

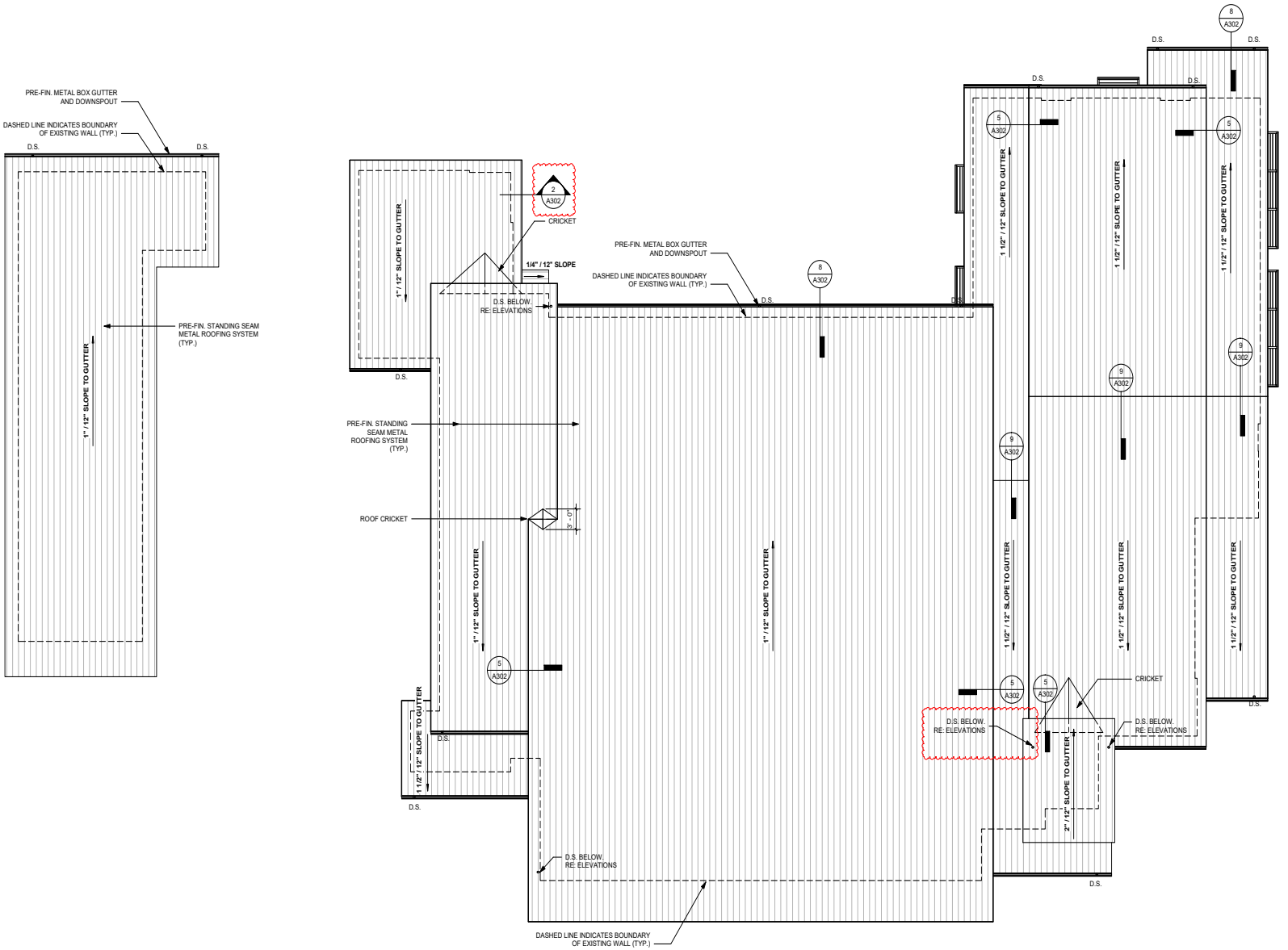

2 WASH BAY ROOF PLAN - ADD ALTERNATE #2
SCALE: 1/8" = 1'-0"

1 ROOF PLAN - BASE BID
SCALE: 1/8" = 1'-0"

TRUE NORTH
PROJECT NORTH

4.1590

PROFESSIONAL SEAL

REGISTERED ARCHITECT JUSTIN E. MYERS 24640 STATE OF TEXAS
JAN. 16, 2020

LOGO/CONTACT

martinez ARCHITECTS

Martinez Architect, LP
900 Rockmead, Suite 250
Houston, Texas 77339
281.346.7371

DESIGN TEAM

Architectural
Martinez Architects

Civil Engineer
Maverick Engineering

Structural
Matrix Structural engineers

M/E/P/T
DBR

Landscape Architect
KDC Associates

FIRE STATION #11

CITY OF MIDLAND
6600 BRIARWOOD AVE
MIDLAND, TX 79707

PROJECT No: MA 18017
DATE: 16-JAN-2020

ISSUE

100% DESIGN DEVELOPMENT
22-MAY-2019

75% CONSTRUCTION DOCUMENT
26-JUN-2019

100% ISSUE FOR PERMIT
30-JUL-2019

100% ISSUE FOR BIDDING
30-JAN-2020

ROOF PLAN

A301

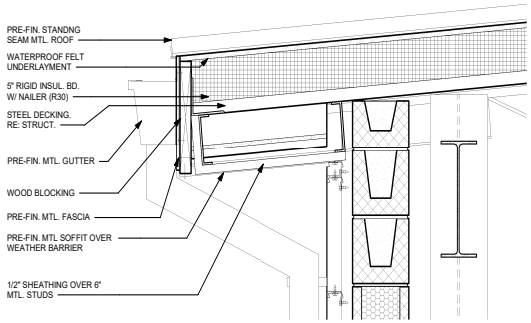

8 EAVE @ APPARATUS BAY
SCALE: 1 1/2" = 1'-0"

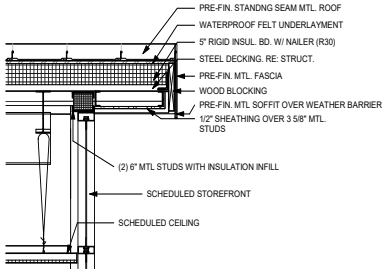

2 EAVE @ EXERCISE RM
SCALE: 3/4" = 1'-0"

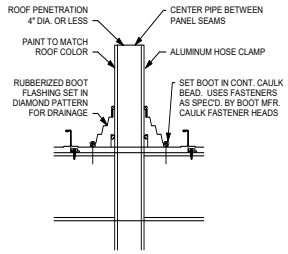

11 PENETRATION
SCALE: N/A

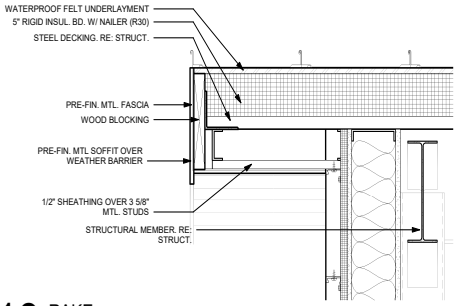

10 RAKE
SCALE: 1 1/2" = 1'-0"

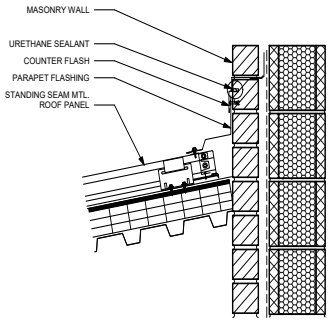

7 ROOF @ WALL
SCALE: 1 1/2" = 1'-0"

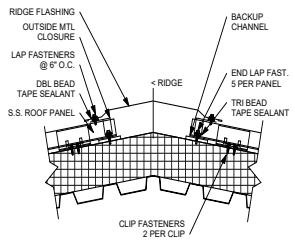

9 RIDGE
SCALE: N/A

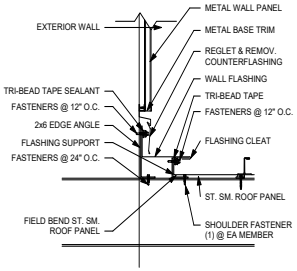

5 ROOF @ WALL
SCALE: N/A

GUTTER: 6"x8" BOX TYPE
DOWNSPOUT 6"x6"
JOINT WITH 1/4" GAP

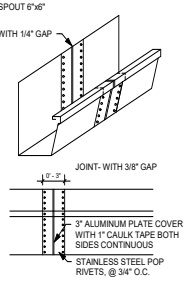

1 GUTTER DETAIL
SCALE: N/A

GENERAL NOTES

1. ROOFING MANUF. / CONTRACTOR SHALL PROVIDE AND SUBMIT WEATHER-TIGHTNESS WARRANTY TO OWNER FOR APPROVAL AS SPECIFIED.
2. ROOFING MANUF. TO SUBMIT DETAILED SHOP DRAWINGS SHOWING ALL ROOF EDGE AND CONNECTION DETAILS FOR ARCHITECTS APPROVAL
3. ALL EXTERIOR METAL TO BE SELECTED BY ARCHITECT FROM MANUF. FULL RANGE OF COLORS AND FINISHES.
4. COORD. MEP DWGS. FOR ALL ROOF PENETRATIONS. ALL PENETRATIONS SHALL BE FINISHED TO MATCH ROOF PANEL COLOR.
5. IN NO INSTANCE SHALL TREATED FRAMING BE IN DIRECT CONTACT WITH METAL ROOFING PANELS.
6. ALL CURBS TO BE SUPPLIED BY METAL ROOFING MANUF. NO FIELD FABRICATED CURBS SHALL BE PERMITTED.
7. APPROVED METAL FLASHING AT ALL HIPS AND VALLEYS RE: DETAILS AND SPECS.
8. CONTRACTOR SHALL VERIFY AND COORDINATE ALL ROOF PENETRATIONS ON MEP AND STRUCTURAL.
9. SIDEWALL CONDITIONS MUST USE STEP FLASHING AS FOLLOWS:
   A. AT STANDING SEAM METAL ROOF ALL SIDEWALL CONDITIONS MUST USE STAINLESS STEEL THRU WALL FLASHING INCORPORATED INTO STANDARD PANEL MANUFRS. DETAILS
   B. SURFACE MOUNTED FLASHING IS NOT ACCEPTABLE.
10. PRE-FINISHED METAL GUTTER AND DOWNSPOUT TYP. RE: DETAILS AND SPECS.
11. REFER TO ARCHITECTURAL SHEET METAL MANUAL, LATEST EDITION, SMACNA.
12. REFERENCE WALL SECTIONS FOR OVERHEAD DIMENSIONS.

PROFESSIONAL SEAL

REGISTERED ARCHITECT JUSTIN E. MARTINEZ 24649 STATE OF TEXAS

16 JAN, 2020

LOGO/CONTACT

martinez ARCHITECTS

Martinez Architect, LP
900 Rockmead, Suite 250
Houston, Texas 77339
281.346.7371

DESIGN TEAM

Architectural
Martinez Architects

Civil Engineer
Maverick Engineering

Structural
Matrix Structural engineers

M/E/P/T
DBR

Landscape Architect
KDC Associates

FIRE STATION #11

CITY OF MIDLAND
6600 BRIARWOOD AVE
MIDLAND, TX 79707

PROJECT No: **MA 18017**
DATE: **16-JAN-2020**

ISSUE

100% DESIGN DEVELOPMENT 22-MAY-2019
75% CONSTRUCTION DOCUMENT 26-JUN-2019
100% ISSUE FOR PERMIT 30-JUL-2019
100% ISSUE FOR BIDDING 30-JAN-2020

ROOF DETAILS

A302

4.1591

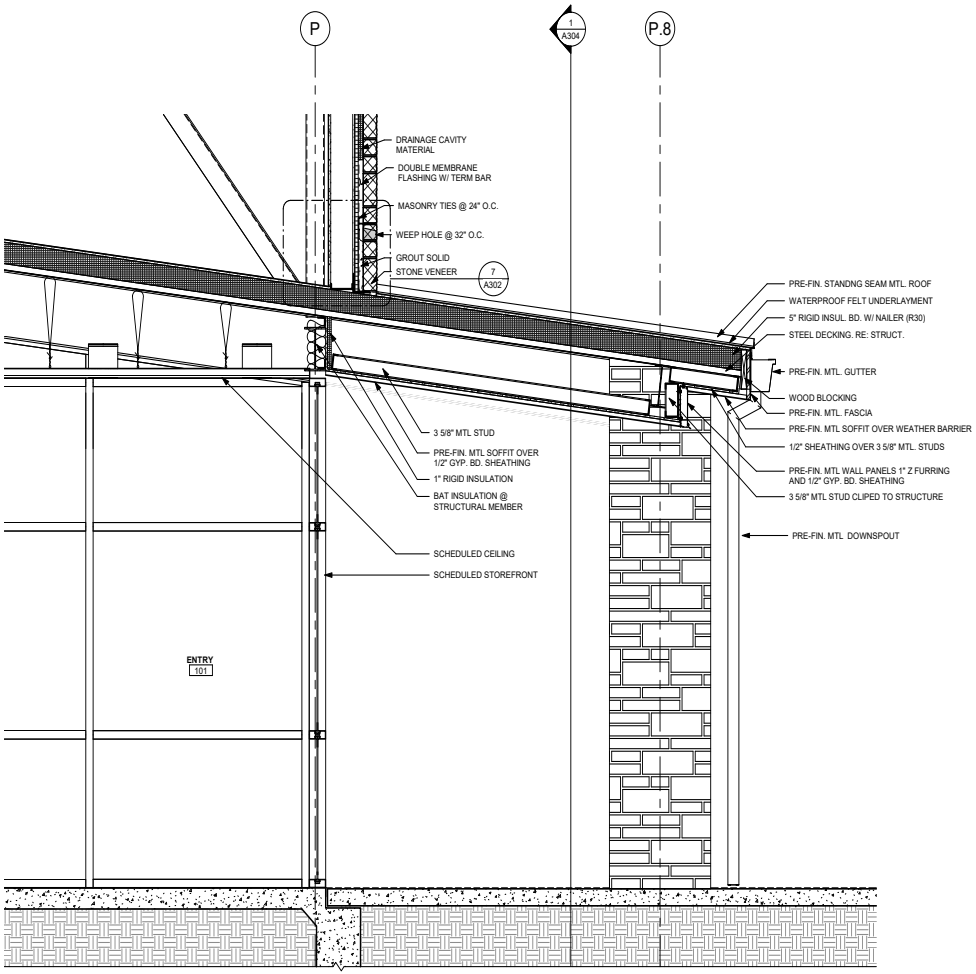

1 WALL/ ROOF SECTION
SCALE: 3/4" = 1'-0"

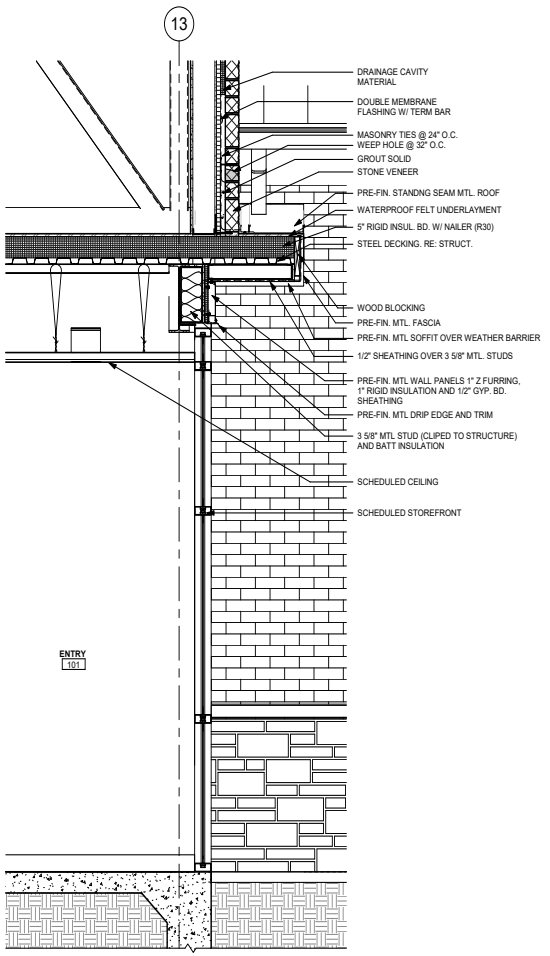

2 WALL/ ROOF SECTION
SCALE: 3/4" = 1'-0"

4.1592

PROFESSIONAL SEAL

REGISTERED ARCHITECT
JUSTIN E. MYERS
24640
STATE OF TEXAS
JAN, 16, 2020

LOGO/CONTACT

martinez ARCHITECTS

Martinez Architect, LP
900 Rockmead, Suite 250
Houston, Texas 77339
281.346.7371

DESIGN TEAM

Architectural
Martinez Architects

Civil Engineer
Maverick Engineering

Structural
Matrix Structural engineers

M/E/P/T
DBR

Landscape Architect
KDC Associates

FIRE STATION #11

CITY OF MIDLAND
6600 BRIARWOOD AVE
MIDLAND, TX 79707

PROJECT No: **MA 18017**
DATE: **16-JAN-2020**

ISSUE

100% DESIGN DEVELOPMENT 22-MAY-2019
75% CONSTRUCTION DOCUMENT 26-JUN-2019
100% ISSUE FOR PERMIT 30-JUL-2019
100% ISSUE FOR BIDDING 30-JAN-2020

ROOF DETAILS

A303

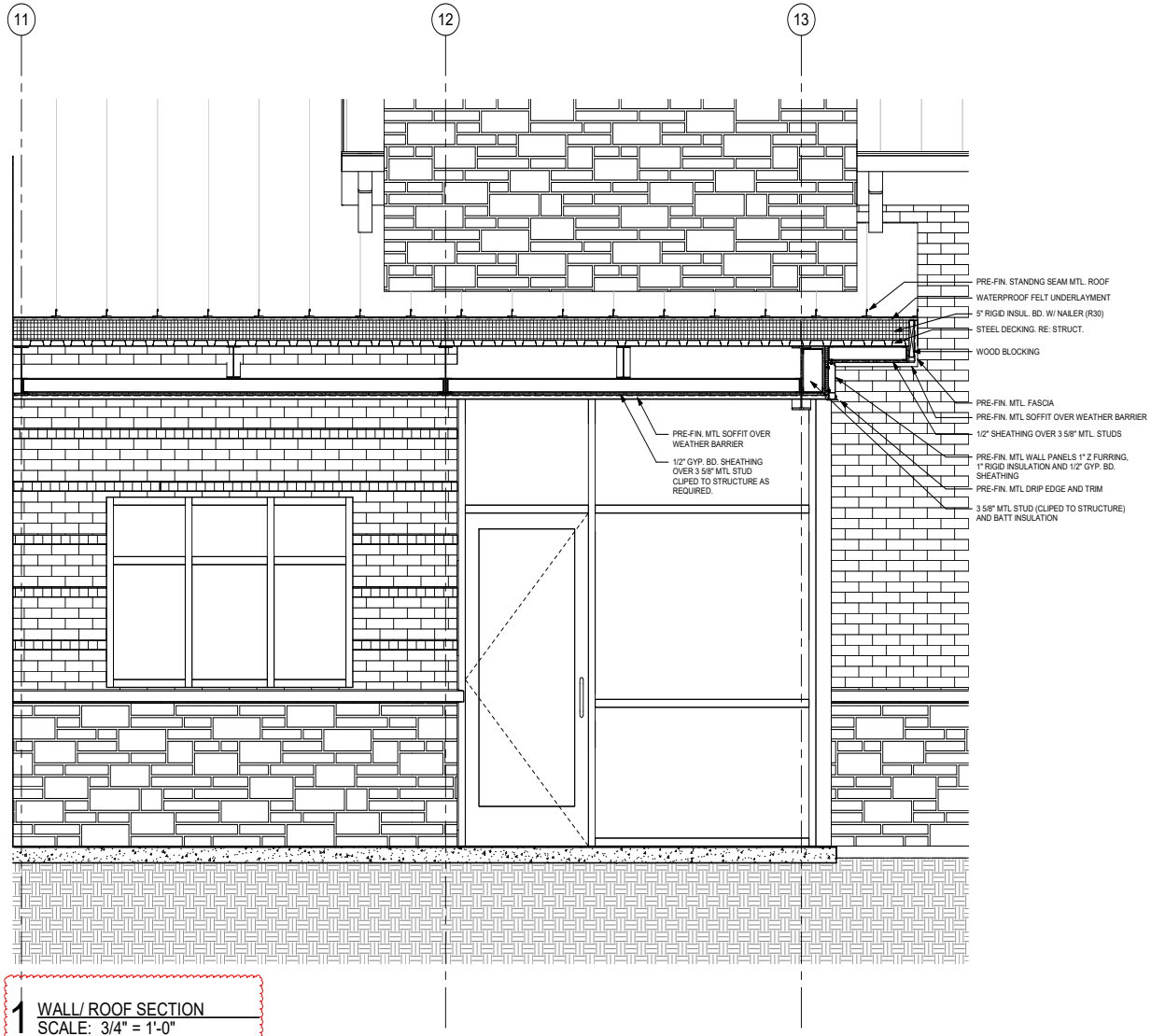

1 WALL/ ROOF SECTION
SCALE: 3/4" = 1'-0"

PROFESSIONAL SEAL

REGISTERED ARCHITECT JUSTIN E. MYERS 24640 STATE OF TEXAS

JAN, 16, 2020

LOGO/CONTACT

martinez ARCHITECTS

Martinez Architect, LP
900 Rockmead, Suite 250
Houston, Texas 77339
281.346.7371

DESIGN TEAM

Architectural
Martinez Architects

Civil Engineer
Maverick Engineering

Structural
Matrix Structural engineers

M/E/P/T
DBR

Landscape Architect
KDC Associates

FIRE STATION #11

CITY OF MIDLAND
6600 BRIARWOOD AVE
MIDLAND, TX 79707

PROJECT No: **MA 18017**
DATE: **16-JAN-2020**

ISSUE

100% DESIGN DEVELOPMENT
22-MAY-2019

75% CONSTRUCTION DOCUMENT
26-JUN-2019

100% ISSUE FOR PERMIT
30-JUL-2019

100% ISSUE FOR BIDDING
30-JAN-2020

ROOF DETAILS

A304

4.1593

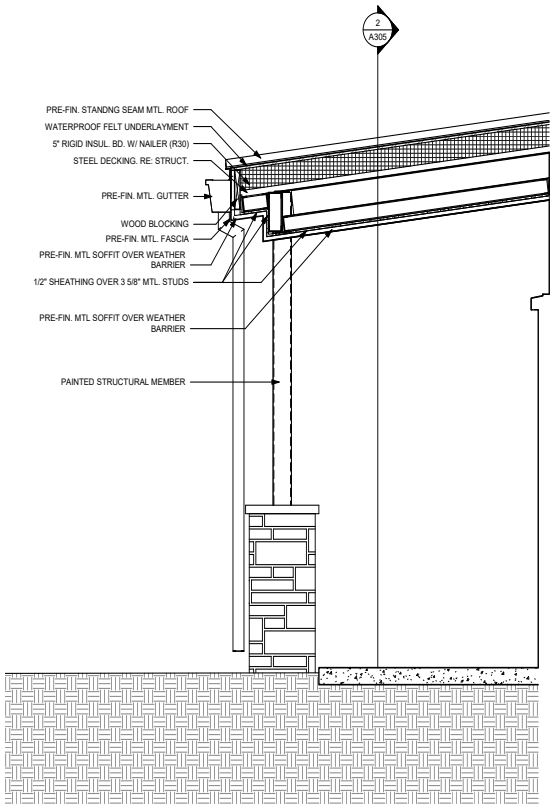

1 WALL/ ROOF SECTION
SCALE: 3/4" = 1'-0"

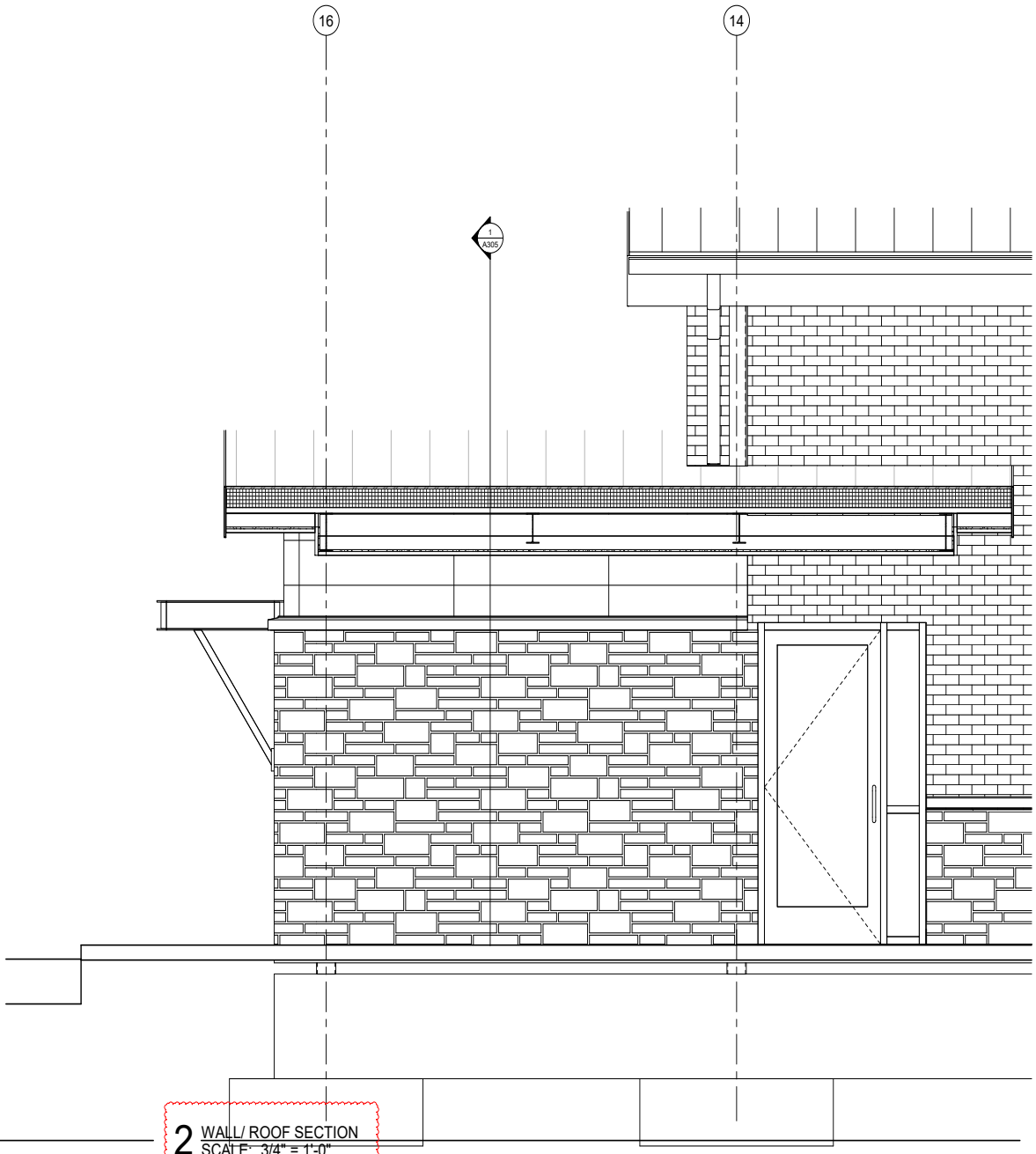

2 WALL/ ROOF SECTION
SCALE: 3/4" = 1'-0"

4.1594

PROFESSIONAL SEAL

REGISTERED ARCHITECT
JUSTIN E. MYERS
24640
STATE OF TEXAS
JAN. 16, 2020

LOGO/CONTACT

martinez ARCHITECTS

Martinez Architect, LP
900 Rockmead, Suite 250
Houston, Texas 77339
281.346.7371

DESIGN TEAM

Architectural
Martinez Architects

Civil Engineer
Maverick Engineering

Structural
Matrix Structural engineers

M/E/P/T
DBR

Landscape Architect
KDC Associates

FIRE STATION #11

CITY OF MIDLAND
6600 BRIARWOOD AVE
MIDLAND, TX 79707

PROJECT No: **MA 18017**
DATE: **16-JAN-2020**

ISSUE

100% DESIGN DEVELOPMENT
22-MAY-2019

75% CONSTRUCTION DOCUMENT
26-JUN-2019

100% ISSUE FOR PERMIT
30-JUL-2019

100% ISSUE FOR BIDDING
30-JAN-2020

ROOF DETAILS

A305

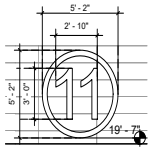

4 STATION SIGN #2
SCALE: 1/4" = 1'-0"

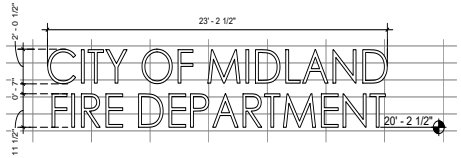

3 STATION SIGN #1
SCALE: 1/4" = 1'-0"

ELEVATION KEY NOTES

57	CONCRETE-FILLED STEEL PIPE BOLLARDS - RE: 6/A102
AS-24	WOOD PLANK SCREEN WALL (RE: 14/A102 & STRUCT). 1- @ OUTDOOR PATIO AREA, PROVIDE (2) 3'-WIDE PEDESTRIAN WOOD GATES WITH ACCOMMODATIONS FOR LOCKING. 2-@ GENERATOR AREA, PROVIDE (2) 3'-WIDE PEDESTRIAN WOOD GATES WITH ACCOMMODATIONS FOR LOCKING. 3-@ DUMPSTER ENCLOSURE, PROVIDE STEE-FRAMED WOOD DOUBLE GATES FOR A 12'-0" OPENING. PROVIDE EACH LEAF OF GATE WITH WHEEL AND CANE BOLT. PROVIDE HOLE IN CONCRETE FOR BOLT @ CLOSED POSITION. PROVIDE PIPE SLEEVE HINGE AS REQUIRED TO PREVENT SAGGING OF GATE.
AS-34	RADIO TOWER - BY OWNER (WALL PENETRATION, GALVANIZED SLEEVE, AND CONDUIT BY CONTRACTOR)
AS-37	CHAIN LINK FENCE (RE: 15/A102)
EL-26	ROUGH FACE STONE VENEER. RE: SPECS
EL-27	PRE-FIN. STANDING SEAM MTL ROOF
EL-28	UTILITY FACE BRICK VENEER - FIELD COLOR. RE: SPECS
EL-29	PRE-FIN. MTL PANELS - 1
EL-31	PRE-FIN. ALUMINUM AWNING AND WALL BRACKETS
EL-32	PRE-FIN. MTL LOUVER
EL-33	PRE-FIN MTL BI-FOLD DOORS
EL-34	PRE-FIN. MTL GUTTERS & DOWNSPOUTS
EL-36	STEEL BRACKET. RE: STRUCTURAL
EL-37	PRE-FIN. MTL LETTERING
EL-38	CAST STONE
EL-42	OVERHEAD COILING DOOR
EL-43	UTILITY FACE BRICK VENEER - ACCENT SOLDIER COURSE EVERY 5TH VERTICAL COURSE. RE: SPECS
EL-44	24" X 24" PRE-FIN. MTL. TRIM ENCLOSURE @ BRACKET
EL-45	21" X 21" PRE-FIN. MTL. TRIM ENCLOSURE @ BRACKET
EL-46	PROVIDE THRU-WALL FLASHING AT INTERSECTION
EL-47	SCHEDULED WINDOW
EL-48	SCHEDULED STOREFRONT

GENERAL EXTERIOR ELEVATION NOTES

A. G.C. SHALL PROVIDE WIND LOAD CERTIFICATION FROM REGISTERED ENGINEER UPON COMPLETION OF PROJECT. ENGINEER TO CERTIFY 90 MPH FOR ALL COMPONENTS OF BUILDING INCLUDING BUT NOT LIMITED TO THE FOUNDATION, WALLS, DOORS, FRAMES, WINDOWS, AND ROOF.

B. G.C. TO COORDINATE ALL LOUVERS, VENTS AND OTHER PENETRATIONS WITH ARCHITECT PRIOR TO INSTALLATION.

C. G.C. TO PERFORM SMOKE TEST, SEAL ALL PENETRATION INDICATED BY RESULTS - COORDINATE WITH ARCHITECT/OWNER

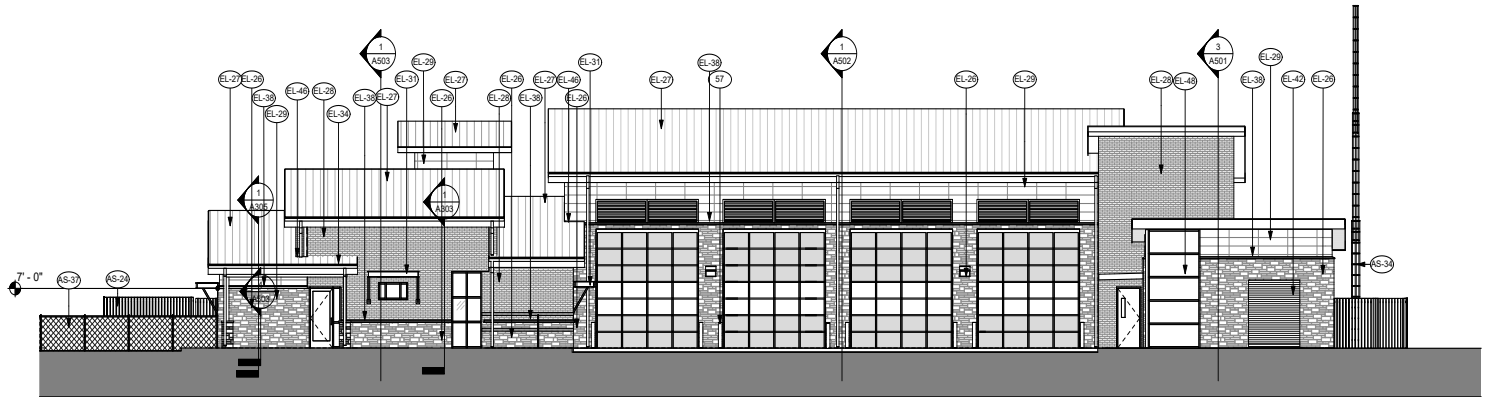

2 NORTH ELEVATION
SCALE: 1/8" = 1'-0"

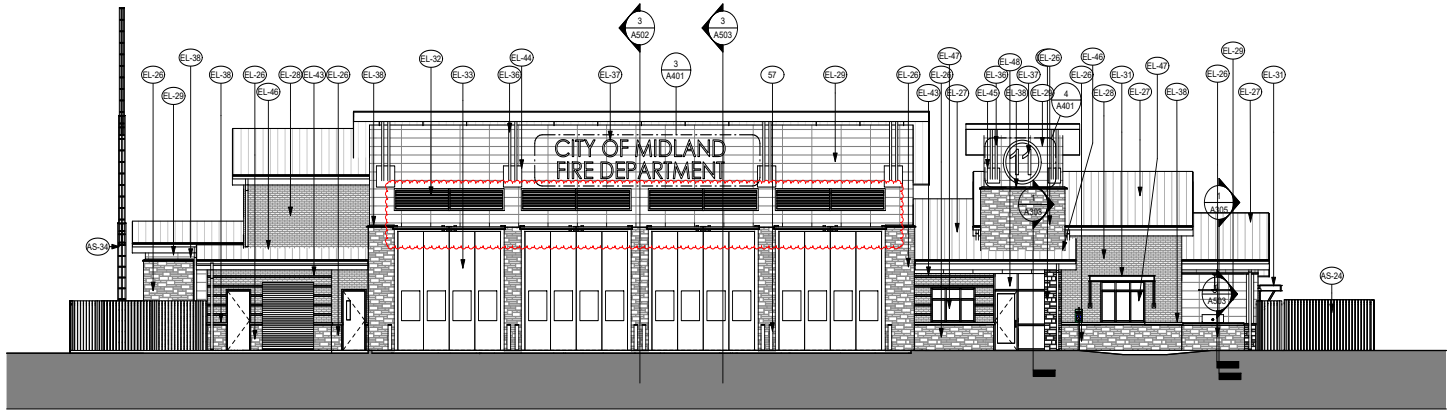

1 SOUTH ELEVATION
SCALE: 1/8" = 1'-0"

PROFESSIONAL SEAL

REGISTERED ARCHITECT
JUSTIN E. MYERS
24640
STATE OF TEXAS
16 JAN, 2020

LOGO/CONTACT

martinez ARCHITECTS

Martinez Architect, LP
900 Rockmead, Suite 250
Houston, Texas 77339
281.346.7371

DESIGN TEAM

Architectural
Martinez Architects

Civil Engineer
Maverick Engineering

Structural
Matrix Structural engineers

M/E/P/T
DBR

Landscape Architect
KDC Associates

FIRE STATION #11
CITY OF MIDLAND
6600 BRIARWOOD AVE
MIDLAND, TX 79707

PROJECT No: **MA 18017**
DATE: **16-JAN-2020**

ISSUE

100% DESIGN DEVELOPMENT 22-MAY-2019
75% CONSTRUCTION DOCUMENT 26-JUN-2019
100% ISSUE FOR PERMIT 30-JUL-2019
100% ISSUE FOR BIDDING 30-JAN-2020

EXTERIOR ELEVATIONS - FIRE STATION

A401

4.1595

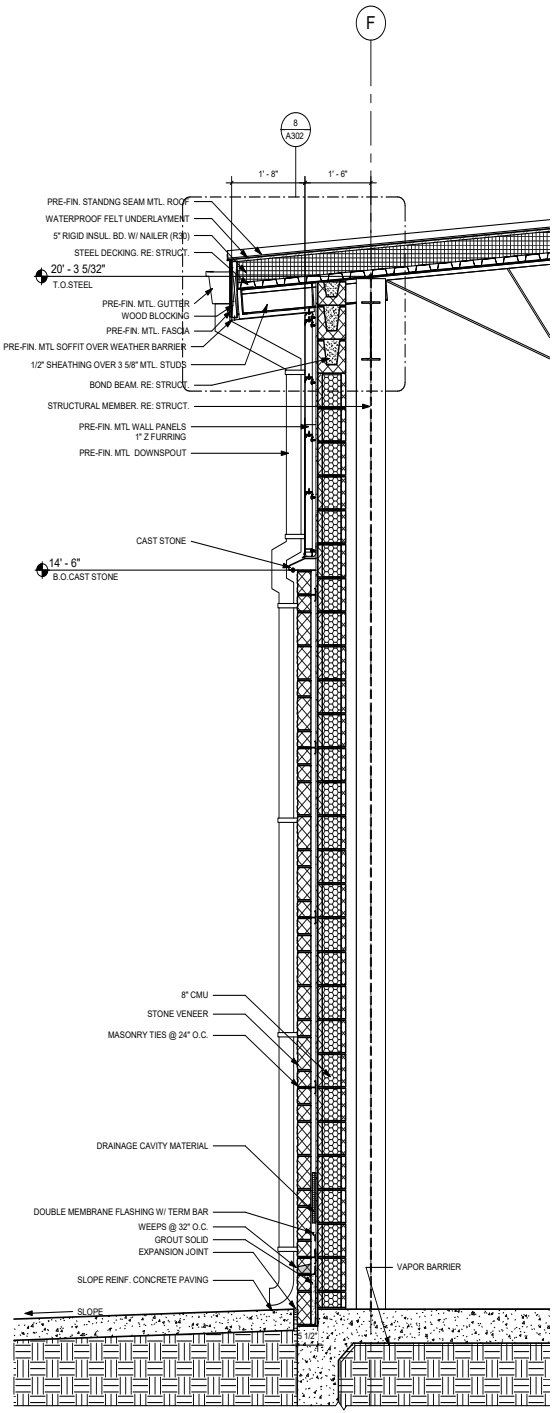

1 WALL SECTION
SCALE: 3/4" = 1'-0"

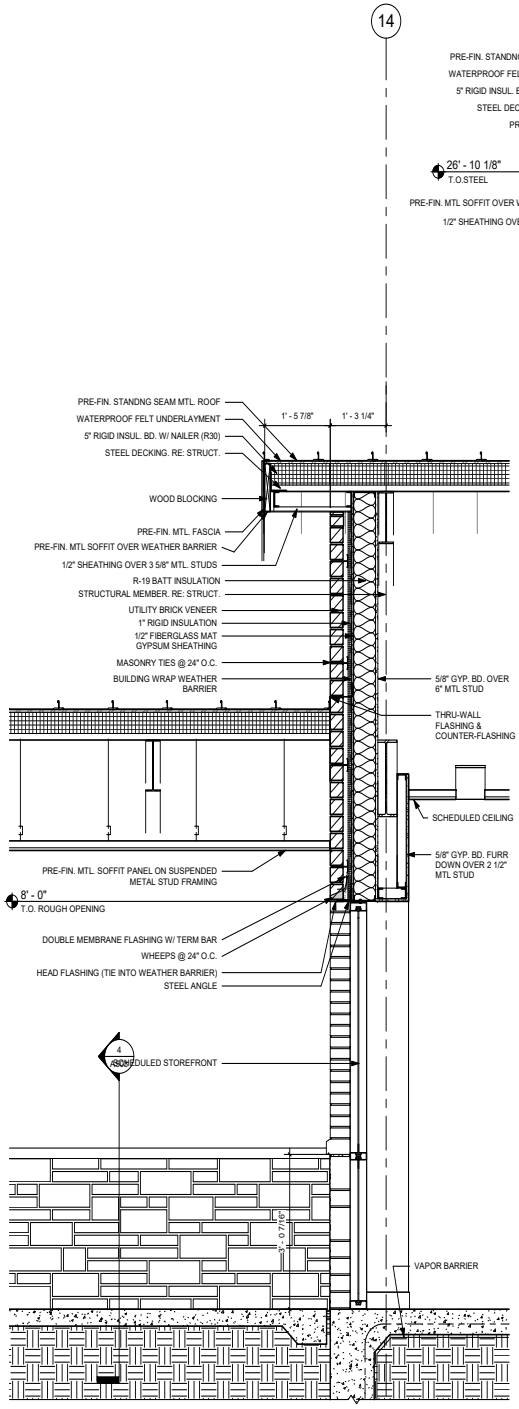

2 WALL SECTION
SCALE: 3/4" = 1'-0"

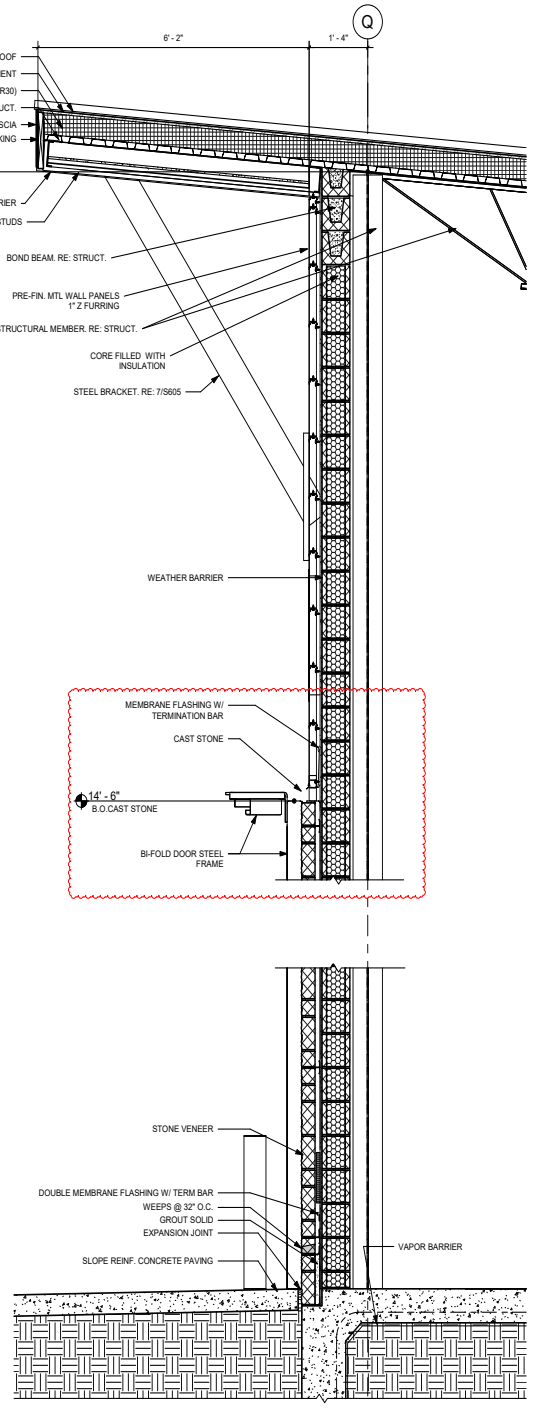

3 WALL SECTION
SCALE: 3/4" = 1'-0"

PROFESSIONAL SEAL

REGISTERED ARCHITECT
JUSTIN E. MYERS
24640
STATE OF TEXAS
JAN. 16, 2020

LOGO/CONTACT

martinez ARCHITECTS

Martinez Architect, LP
900 Rockmead, Suite 250
Houston, Texas 77339
281.346.7371

DESIGN TEAM

Architectural
Martinez Architects

Civil Engineer
Maverick Engineering

Structural
Matrix Structural engineers

M/E/P/T
DBR

Landscape Architect
KDC Associates

FIRE STATION #11

CITY OF MIDLAND
6600 BRIARWOOD AVE
MIDLAND, TX 79707

PROJECT No: **MA 18017**
DATE: **16-JAN-2020**

ISSUE

100% DESIGN DEVELOPMENT 22-MAY-2019
75% CONSTRUCTION DOCUMENT 26-JUN-2019
100% ISSUE FOR PERMIT 30-JUL-2019
100% ISSUE FOR BIDDING 30-JAN-2020

WALL SECTIONS - FIRE STATION

A502

4.1596

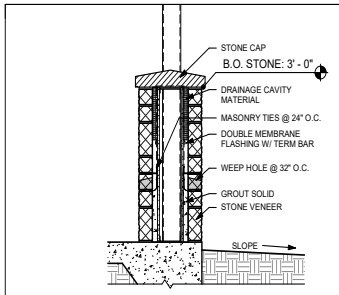

4 SHORT WALL @ PATIO
SCALE: 3/4" = 1'-0"

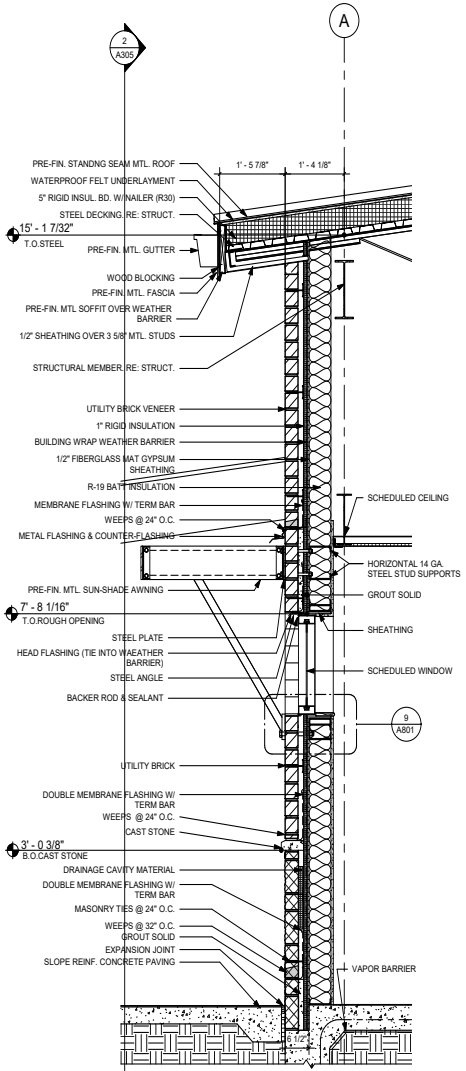

1 WALL SECTION
SCALE: 3/4" = 1'-0"

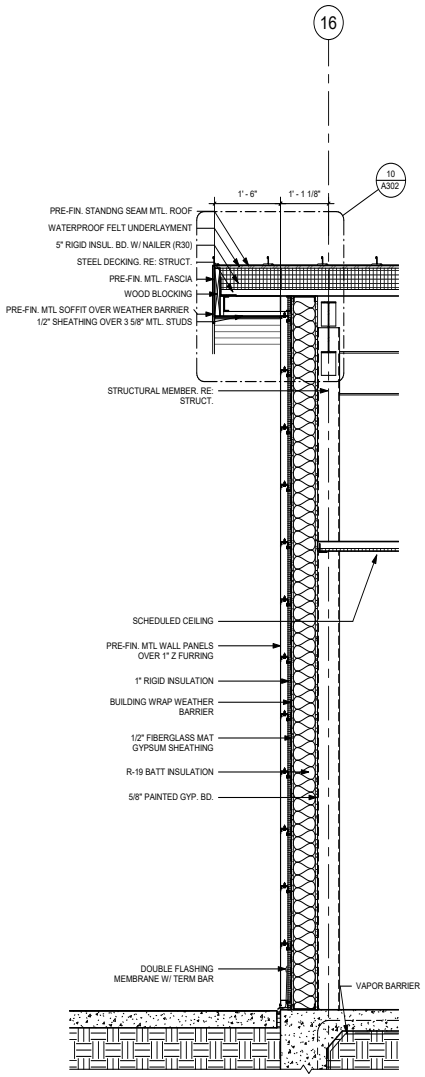

2 WALL SECTION
SCALE: 3/4" = 1'-0"

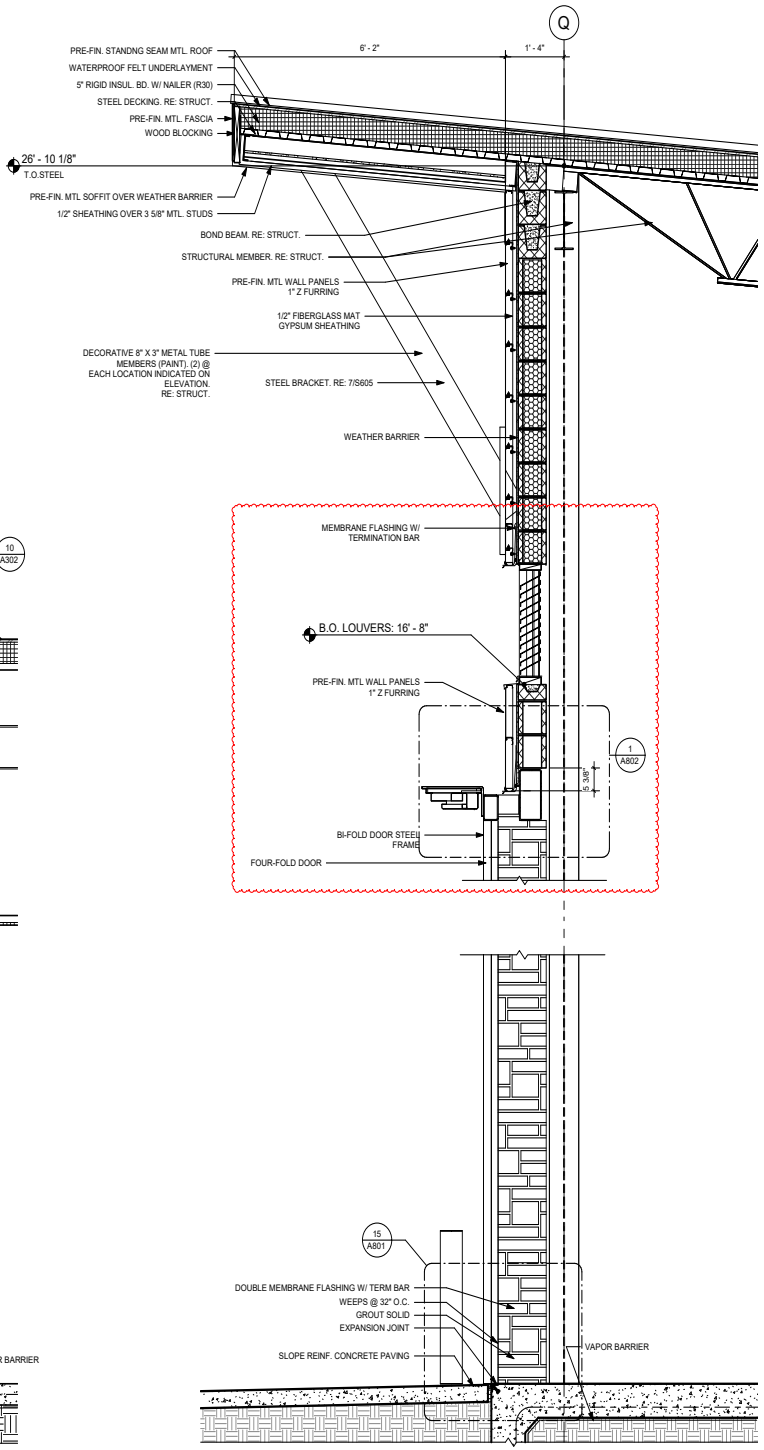

3 WALL SECTION
SCALE: 3/4" = 1'-0"

4.1597

PROFESSIONAL SEAL

REGISTERED ARCHITECT
JUSTIN E. MYERS
24640
STATE OF TEXAS
JAN. 16, 2020

LOGO/CONTACT

martinez ARCHITECTS

Martinez Architect, LP
900 Rockmead, Suite 250
Houston, Texas 77339
281.346.7371

DESIGN TEAM

Architectural
Martinez Architects

Civil Engineer
Maverick Engineering

Structural
Matrix Structural engineers

M/E/P/T
DBR

Landscape Architect
KDC Associates

FIRE STATION #11
CITY OF MIDLAND
6600 BRIARWOOD AVE
MIDLAND, TX 79707

PROJECT No: **MA 18017**
DATE: **16-JAN-2020**

ISSUE
100% DESIGN DEVELOPMENT 22-MAY-2019
75% CONSTRUCTION DOCUMENT 26-JUN-2019
100% ISSUE FOR PERMIT 30-JUL-2019
100% ISSUE FOR BIDDING 30-JAN-2020

WALL SECTIONS - FIRE STATION

A503

ENLARGED PLAN GENERAL NOTES

A. INSTALL CURBS AT NON-ACCESSIBLE SHOWERS.
B. INSTALL ALL PLUMBING ACCESS PANELS NOT TO CONFLICT W/ TOILET ACCESSORIES.
C. COORDINATE ALL TOILET ACCESSORIES AND INSTALLATION w/ ARCHITECT/OWNER. ALL ACCESSORIES TO HAVE TUMBLER LATCH KNOB (NO KEYED LOCKS)
D. SHEET G001 FOR TYPICAL ACCESSIBLE DIMENSIONS & MOUNTING HEIGHTS.

ENLARGED FLOOR PLAN KEYED NOTES (#)

001	36" & 42" GRAB BARS w/ SLIP-RESISTANT SURFACE
3	FIRE EXTINGUISHER IN CABINET AT DRYWALL LOCATIONS, AND SURFACE MOUNTED AT CMU LOCATIONS
003	TOILET PAPER DISPENSER (MOUNT @ 19" A.F.F.)
4	TRENCH DRAIN (RE: PLUMBING)
004	RECESSED PAPER TOWEL DISPENSER/RECEPTACLE
005	WALL-MOUNTED LIQUID SOAP DISPENSER
006	MIRROR - 24"W x 36"H
007	RECESSED SHOWER SHELF
008	SHOWER CURTAIN, ROD & HOOKS
009	TWO CLOTHING HOOKS
010	CONTINUOUS SHOWER GRAB BAR w/ SLIP-RESISTANT SURFACE
14	65 LB UNIMAC EXTRACTOR BY OWNER VENDOR
17	ICE MACHINE BY OWNER G.C. TO INSTALL
18	STEEL STAIR w/ CONCRETE TREADS
25	RESIDENTIAL WASHER/ DRYER BY OWNER G.C. INSTALL
025	SHOWER / EYEWASH RE: PLUMB
026	BUILT-IN P-LAM STORAGE CABINETS
028	CONCRETE CURB. RE: 14/A801
030	ACCESSIBLE SHOWER THRESHOLD. RE: 13/A801
43	MOP SINK. RE: PLUMBING
61	PAINT STRUCTURAL COLUMNS. (TYP.)

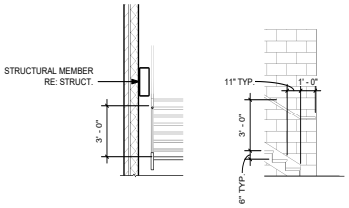

6 STAIR DETAILS
SCALE: 1/4" = 1'-0"

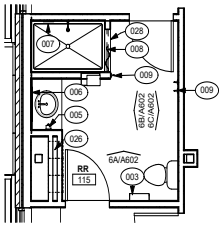

3 RESTROOM 115
SCALE: 1/4" = 1'-0"

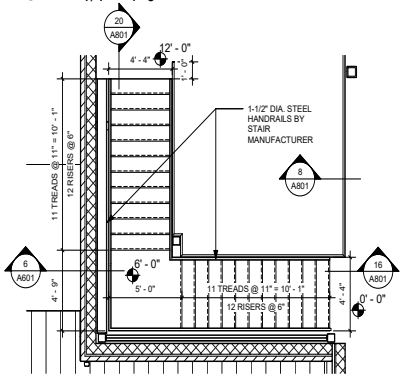

5 STAIR
SCALE: 1/4" = 1'-0"

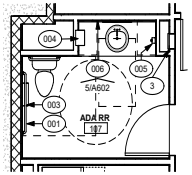

2 RESTROOM 107
SCALE: 1/4" = 1'-0"

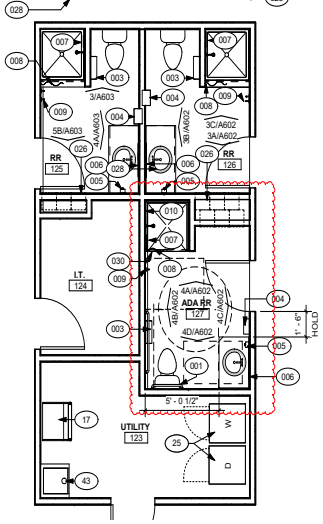

4 UTILITY/RESTROOM CORE
SCALE: 1/4" = 1'-0"

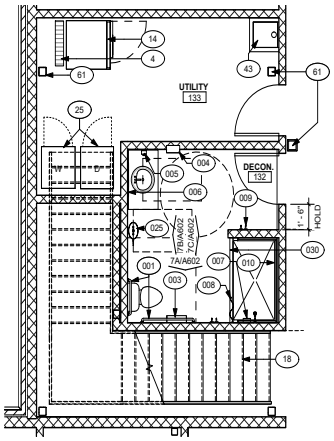

1 UTILITY/DECON
SCALE: 1/4" = 1'-0"

TRUE NORTH
PROJECT NORTH

4.1598

PROFESSIONAL SEAL

REGISTERED ARCHITECT
JUSTIN E. MYERS
24640
STATE OF TEXAS
JAN. 16, 2020

LOGO/CONTACT

martinez ARCHITECTS
Martinez Architect, LP
900 Rockmead, Suite 250
Houston, Texas 77339
281.346.7371

DESIGN TEAM

Architectural
Martinez Architects

Civil Engineer
Maverick Engineering

Structural
Matrix Structural engineers

M/E/P/T
DBR

Landscape Architect
KDC Associates

FIRE STATION #11

CITY OF MIDLAND
6600 BRIARWOOD AVE
MIDLAND, TX 79707

PROJECT No: MA 18017
DATE: 16-JAN-2020

ISSUE
100% DESIGN DEVELOPMENT 22-MAY-2019
75% CONSTRUCTION DOCUMENT 26-JUN-2019
100% ISSUE FOR PERMIT 30-JUL-2019
100% ISSUE FOR BIDDING 30-JAN-2020

ENLARGED FLOOR PLANS

A601

NOTE:
FULL HEIGHT TILE @ SHOWERS

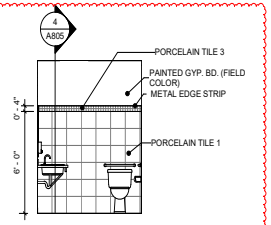

4D RR 127
SCALE: 1/4" = 1'-0"

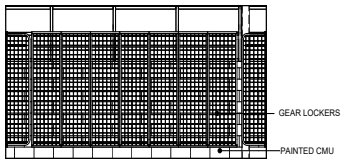

9A GEAR ROOM 134
SCALE: 1/4" = 1'-0"

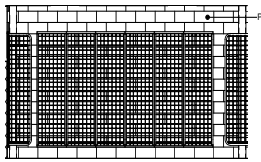

9B GEAR ROOM 134
SCALE: 1/4" = 1'-0"

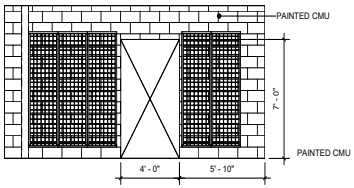

9C GEAR ROOM 134
SCALE: 1/4" = 1'-0"

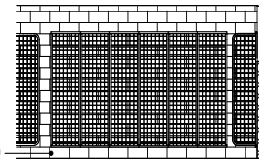

9D GEAR ROOM 134
SCALE: 1/4" = 1'-0"

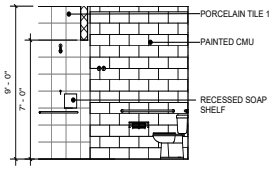

7A DECON 132
SCALE: 1/4" = 1'-0"

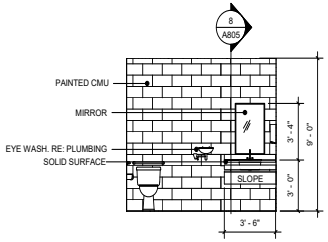

7B DECON 132
SCALE: 1/4" = 1'-0"

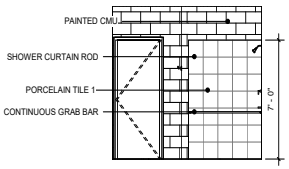

7C DECON 132
SCALE: 1/4" = 1'-0"

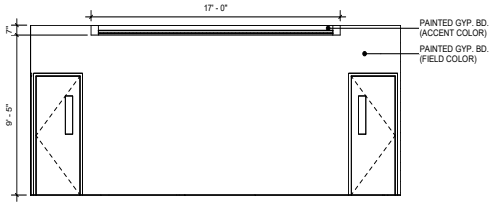

8 DAY ROOM
SCALE: 1/4" = 1'-0"

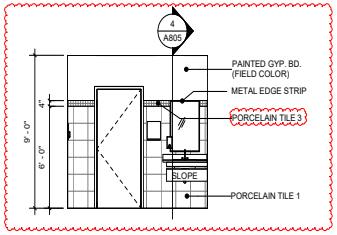

4C RESTROOM 127
SCALE: 1/4" = 1'-0"

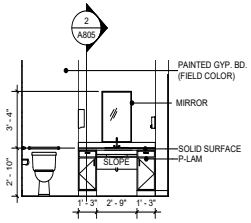

5 RESTROOM 107
SCALE: 1/4" = 1'-0"

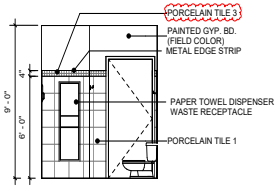

6A RESTROOM 115
SCALE: 1/4" = 1'-0"

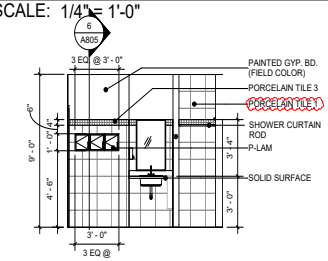

6B RESTROOM 115
SCALE: 1/4" = 1'-0"

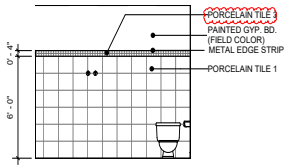

6C RESTROOM 115
SCALE: 1/4" = 1'-0"

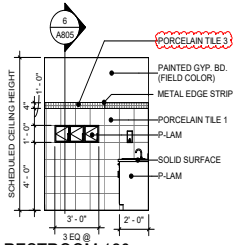

3A RESTROOM 126
SCALE: 1/4" = 1'-0"

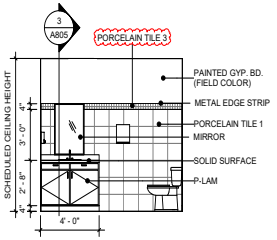

3B RESTROOM 126
SCALE: 1/4" = 1'-0"

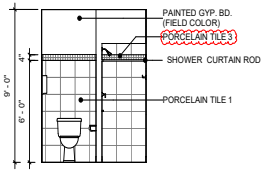

3C RESTROOM 126
SCALE: 1/4" = 1'-0"

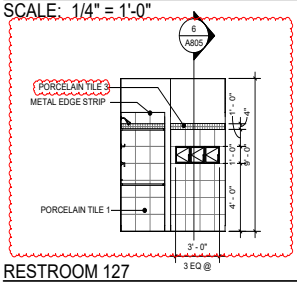

4A RESTROOM 127
SCALE: 1/4" = 1'-0"

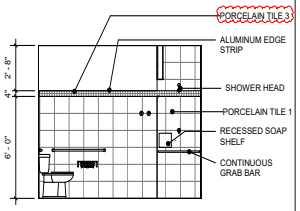

4B RESTROOM 127
SCALE: 1/4" = 1'-0"

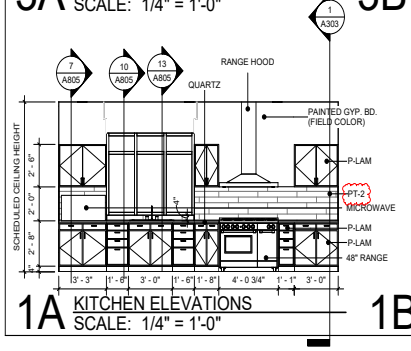

1A KITCHEN ELEVATIONS
SCALE: 1/4" = 1'-0"

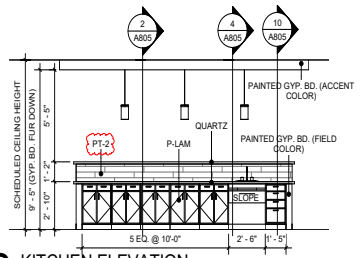

1B KITCHEN ELEVATION
SCALE: 1/4" = 1'-0"

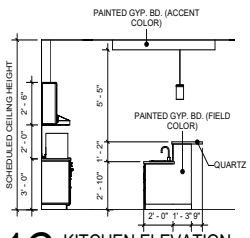

1C KITCHEN ELEVATION
SCALE: 1/4" = 1'-0"

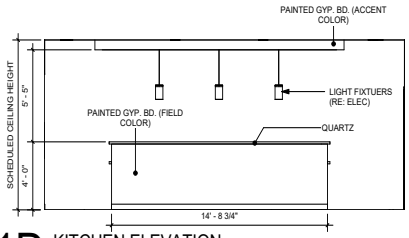

1D KITCHEN ELEVATION
SCALE: 1/4" = 1'-0"

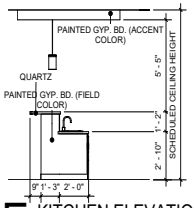

1E KITCHEN ELEVATION
SCALE: 1/4" = 1'-0"

4.1599

PROFESSIONAL SEAL

REGISTERED ARCHITECT
JUSTIN E. MYERS
24640
STATE OF TEXAS
JAN. 16, 2020

LOGO/CONTACT

martinez ARCHITECTS

Martinez Architect, LP
900 Rockmead, Suite 250
Houston, Texas 77339
281.346.7371

DESIGN TEAM

Architectural
Martinez Architects

Civil Engineer
Maverick Engineering

Structural
Matrix Structural engineers

M/E/P/T
DBR

Landscape Architect
KDC Associates

FIRE STATION #11

CITY OF MIDLAND
6600 BRIARWOOD AVE
MIDLAND, TX 79707

PROJECT No: MA 18017
DATE: 16-JAN-2020

ISSUE

100% DESIGN DEVELOPMENT
22-MAY-2019

75% CONSTRUCTION DOCUMENT
26-JUN-2019

100% ISSUE FOR PERMIT
30-JUL-2019

100% ISSUE FOR BIDDING
30-JAN-2020

INTERIOR ELEVATIONS

A602

WALL FINISH LEGEND

PORCELAIN TILE-1
MARAZZI, MODERN OASIS
SOFT CLOUD, 12"X24"

PORCELAIN TILE-2 (PT-2)
DALTILE, EMERSON WOOD
ASH WHITE EP06,
3D CUBE MOSAIC

PAINTED GYP. BD.
SHERWIN WILLIAMS
SW 7005, Pure White

PORCELAIN TILE-3
MARAZZI, MODERN OASIS
DESERT SAND, 2"X2"

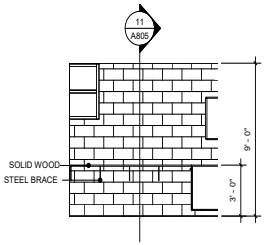

6A SHOP 135
SCALE: 1/4" = 1'-0"

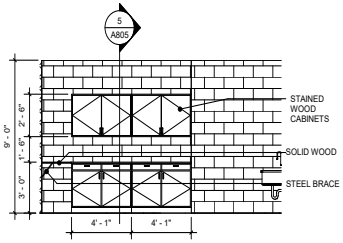

6B SHOP 135
SCALE: 1/4" = 1'-0"

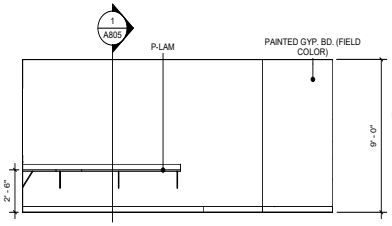

1 OFFICE 1
SCALE: 1/4" = 1'-0"

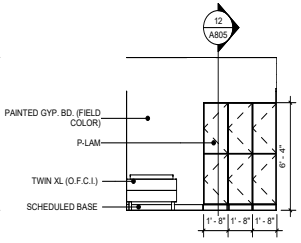

2 DORM 3
SCALE: 1/4" = 1'-0"

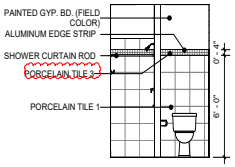

3 RESTROOM 125
SCALE: 1/4" = 1'-0"

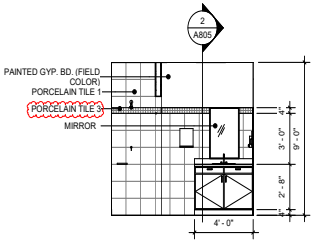

4A RESTROOM 125
SCALE: 1/4" = 1'-0"

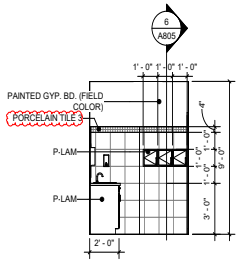

5B RESTROOM 125
SCALE: 1/4" = 1'-0"

4.1600

PROFESSIONAL SEAL

REGISTERED ARCHITECT
JUSTIN E. MYERS
24640
STATE OF TEXAS
JAN. 16, 2020

LOGO/CONTACT

martinez ARCHITECTS

Martinez Architect, LP
900 Rockmead, Suite 250
Houston, Texas 77339
281.346.7371

DESIGN TEAM

Architectural
Martinez Architects

Civil Engineer
Maverick Engineering

Structural
Matrix Structural engineers

M/E/P/T
DBR

Landscape Architect
KDC Associates

FIRE STATION #11

CITY OF MIDLAND
6600 BRIARWOOD AVE
MIDLAND, TX 79707

PROJECT No: **MA 18017**
DATE: **16-JAN-2020**

ISSUE

100% DESIGN DEVELOPMENT
22-MAY-2019

75% CONSTRUCTION DOCUMENT
26-JUN-2019

100% ISSUE FOR PERMIT
30-JUL-2019

100% ISSUE FOR BIDDING
30-JAN-2020

INTERIOR ELEVATIONS

A603

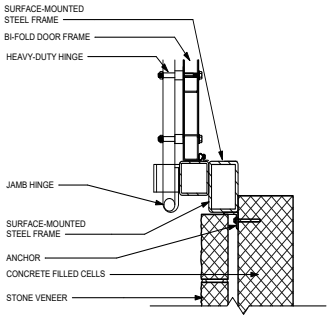

2 FOUR-FOLD DOOR / JAMB
SCALE: 1 1/2" = 1'-0"

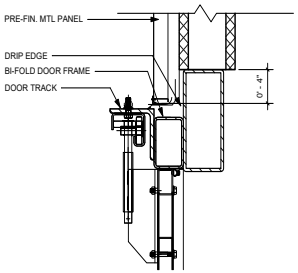

1 FOUR-FOLD DOOR / HEAD
SCALE: 1 1/2" = 1'-0"

4.1601

PROFESSIONAL SEAL

REGISTERED ARCHITECT
JUSTIN E. MARTINEZ
24640
STATE OF TEXAS
JAN. 16, 2020

LOGO/CONTACT

martinez ARCHITECTS

Martinez Architect, LP
900 Rockmead, Suite 250
Houston, Texas 77339
281.346.7371

DESIGN TEAM

Architectural
Martinez Architects

Civil Engineer
Maverick Engineering

Structural
Matrix Structural engineers

M/E/P/T
DBR

Landscape Architect
KDC Associates

FIRE STATION #11

CITY OF MIDLAND
6600 BRIARWOOD AVE
MIDLAND, TX 79707

PROJECT No: **MA 18017**
DATE: **16-JAN-2020**

ISSUE

100% DESIGN DEVELOPMENT
22-MAY-2019

75% CONSTRUCTION DOCUMENT
26-JUN-2019

100% ISSUE FOR PERMIT
30-JUL-2019

100% ISSUE FOR BIDDING
30-JAN-2020

DETAILS

A802

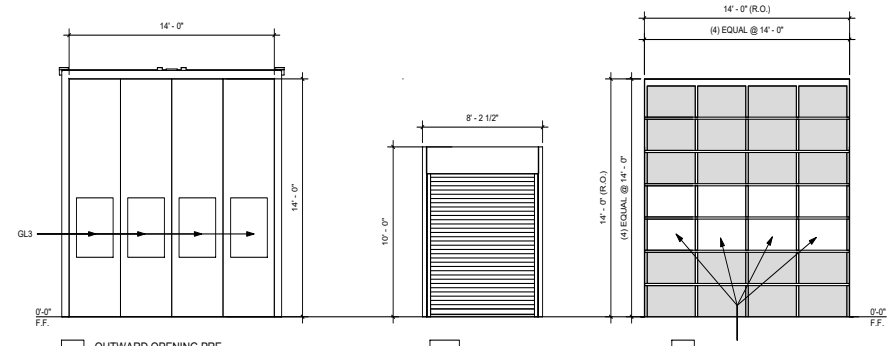

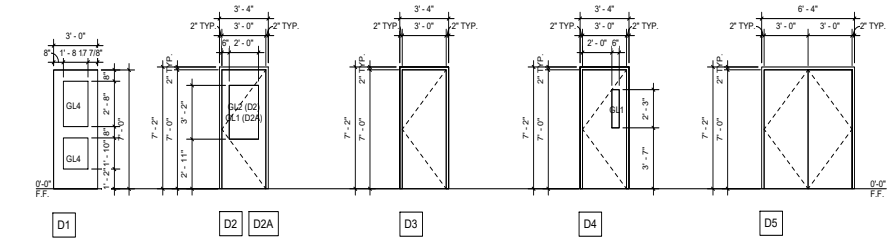

2 DOOR TYPES

GLAZING LEGEND
GL1 - 1/4" CLEAR GLASS (TEMPERED)
GL2 - 1/4" CLEAR GLASS (FIRE RATED)
GL3 - 1" TINTED INSULATED GLASS
GL4 - 1" INSULATED TEMPERED GLASS

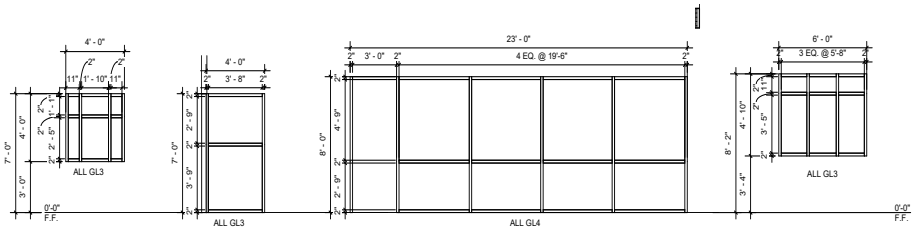

01 FRAME - Aluminum Storefront WALL - Exterior Metal Stud
PROVIDE BLACK OUT SHADES

02 FRAME - Aluminum Storefront WALL - Exterior Metal Stud
PROVIDE BLACK OUT SHADES

10 FRAME - Aluminum Storefront WALL - Exterior Metal Stud

04 FRAME - Aluminum Storefront WALL - Exterior Metal Stud

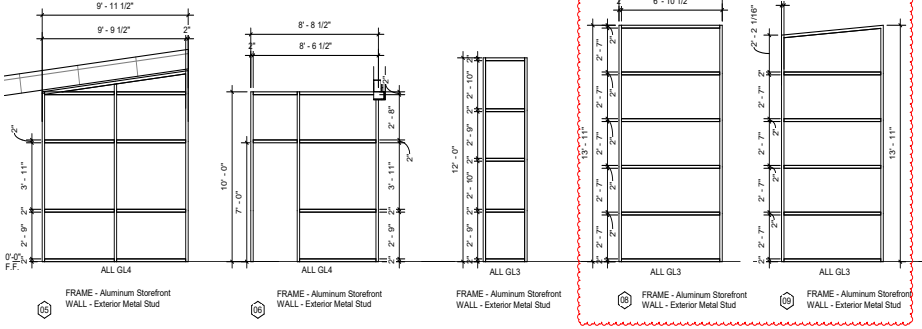

05 FRAME - Aluminum Storefront WALL - Exterior Metal Stud

06 FRAME - Aluminum Storefront WALL - Exterior Metal Stud

FRAME - Aluminum Storefront WALL - Exterior Metal Stud

08 FRAME - Aluminum Storefront WALL - Exterior Metal Stud

09 FRAME - Aluminum Storefront WALL - Exterior Metal Stud

10 FRAME - Aluminum Storefront WALL - Exterior Metal Stud

11 FRAME - Aluminum Storefront WALL - Exterior Metal Stud

12 FRAME - Aluminum Storefront WALL - Exterior Metal Stud

1 WINDOW TYPES

DOOR SCHEDULE - BASE BID

DOOR TAG	FROM ROOM: NAME	TO ROOM: NAME	DOOR TYPE	HARDWARE SET	THICKNESS	DOOR MATERIAL: ALUMINUM	DOOR MATERIAL: HOLLOW METAL (PAINTED)	DOOR MATERIAL: WOOD (P-LAM FACED) WILSONART "HAMPTON WALNUT"	DOOR MATERIAL: STEEL	FRAME MATERIAL: ALUMINUM	FRAME MATERIAL: HOLLOW METAL (PAINTED)	FRAME MATERIAL: STEEL	WALL TYPE ANCHOR: INTERIOR: 3-5/8" MTL STUD W/ 5/8" GYP BD	WALL TYPE ANCHOR: INTERIOR: 3-5/8" MTL STUD W/ 5/8" GYP BD - FIRE RATED	WALL TYPE ANCHOR: INTERIOR: 6" MTL. STUD ON 36" HIGH CMU BASE	WALL TYPE ANCHOR: INTERIOR: 6" STUD W/ GYP BD ONE SIDE & MTL LINES PANEL ONE SIDE, 36" HIGH CMU BASE	WALL TYPE ANCHOR: INTERIOR: 6" CMU	WALL TYPE ANCHOR: INTERIOR: 8" CMU WITH 5/8" GYP. BD. ONE SIDE	WALL TYPE ANCHOR: EXTERIOR: STRUCTURAL BRICK	WALL TYPE ANCHOR: EXTERIOR: EXTERIOR CMU	WALL TYPE ANCHOR: EXTERIOR: EXTERIOR STOREFRONT	FIRE RATING	REMARKS
101 A	KITCHEN	ENTRY	D1	711AV	0' - 1 3/4"	•				•			•									•	
101B	PATIO	ENTRY	D1	C715A	0' - 1 3/4"	•				•												•	
102 A	KITCHEN	OFFICE	D2A	103	0' - 1 3/4"			•			•		•										
103 A	AIR LOCK	APPARATUS BAYS	D2	C205	0' - 1 3/4"			•			•								•			20 MIN.	
103 B	KITCHEN	AIR LOCK	D2A	405	0' - 1 3/4"			•			•		•										
104 A	DINING ROOM	PANT. 1	D3	503	0' - 1 3/4"			•			•		•										
105 A	DINING ROOM	PANT. 2	D3	503	0' - 1 3/4"			•			•		•										
106 A	DAY ROOM	PANT. 3	D3	503	0' - 1 3/4"			•			•		•										
107 A	DAY ROOM	ADA RR	D3	301	0' - 1 3/4"			•			•		•										
108 A	PATIO	KITCHEN	D1	DS05A	0' - 1 3/4"	•				•												•	
112 A	DAY ROOM	ELEC.	D3	201	0' - 1 3/4"			•			•		•										
113 A	AIR LOCK	APPARATUS BAYS	D2	C205	0' - 1 3/4"			•			•								•			20 MIN.	
113 B	HALLWAY	AIR LOCK	D2A	405	0' - 1 3/4"			•			•		•										
114 A	HALLWAY	DORM 8	D3	303	0' - 1 3/4"			•			•		•										
114 B	RR	DORM 8	D3	303	0' - 1 3/4"			•			•		•										
116 A	HALLWAY	DORM 7	D3	303S	0' - 1 3/4"			•			•		•										
116 B	RR	DORM 7	D3	303	0' - 1 3/4"			•			•		•										
117 A	HALLWAY	DORM 6	D3	303	0' - 1 3/4"			•			•		•										
118 A	HALLWAY	DORM 5	D3	303S	0' - 1 3/4"			•			•		•										
119 A	HALLWAY	DORM 4	D3	303S	0' - 1 3/4"			•			•		•										
120 A	HALLWAY	DORM 3	D3	303S	0' - 1 3/4"			•			•		•										
121 A	HALLWAY	DORM 2	D3	303S	0' - 1 3/4"			•			•		•										
122 A	HALLWAY	DORM 1	D3	303	0' - 1 3/4"			•			•		•										
123 A	UTILITY	HALLWAY	D3	401	0' - 1 3/4"			•			•		•										
124 A	HALLWAY	I.T.	D3	201	0' - 1 3/4"			•			•		•										
125 A	HALLWAY	RR	D3	301	0' - 1 3/4"			•			•		•										
126 A	HALLWAY	RR	D3	301	0' - 1 3/4"			•			•		•										
127 A	HALLWAY	ADA RR	D3	307	0' - 1 3/4"			•			•		•										
128 A	PATIO	HALLWAY	D1	C715A	0' - 1 3/4"	•				•												•	
128 B	HALLWAY	DAY ROOM	1001	403	0' - 1 3/4"			•			•		•									20 MIN	
128 C	DAY ROOM	HALLWAY	1001	403	0' - 1 3/4"			•			•		•									20 MIN	
129 A	PATIO	APPARATUS BAYS	1002	001					•			•								•			
129 B	PATIO	APPARATUS BAYS	1002	001					•			•								•			
129 C	PATIO	APPARATUS BAYS	1002	001					•			•								•			
129 D	PATIO	APPARATUS BAYS	1002	001					•			•								•			
129 E	APPARATUS BAYS	PATIO	D6	002					•			•								•			
129 F	APPARATUS BAYS	PATIO	D6	002					•			•								•			
129 G	APPARATUS BAYS	PATIO	D6	002					•			•								•			
129 H	APPARATUS BAYS	PATIO	D6	002					•			•								•			
129 J	APPARATUS BAYS	PATIO	D4	D715	0' - 1 3/4"		•				•									•			
130 A	PATIO	YARD STRG.	D7A	001					•			•								•			
131 A	FIRE RISER	PATIO	D3	D205	0' - 1 3/4"		•				•									•			
132 A	DECON.	APPARATUS BAYS	D3	301	0' - 1 3/4"			•			•							•					
133 A	UTILITY	APPARATUS BAYS	D3	401	0' - 1 3/4"			•			•							•					
135 A	APPARATUS BAYS	SHOP	D3	501	0' - 1 3/4"			•			•							•					
136 A	APPARATUS BAYS	AIR LOCK	D2A	735	0' - 1 3/4"			•			•							•					
136 B	AIR LOCK	PATIO	D4	C715	0' - 1 3/4"		•				•									•			
137 A	AIR LOCK	EXCERCISE	D2	505I	0' - 1 3/4"			•			•							•				20 MIN.	
137 B	PATIO	EXCERCISE	D7A	001					•			•								•			

NOTES

1. All hollow metal door frames will be painted.
2. Re: Sheet A801 & A802 for door & window details.
3. Re: Spec. for door hardware.
4. Re: Hardware Spec. for Door Swing information
5. All interior wood doors to receive plastic laminate finish U.N.O.
6. All exterior doors to be flush doors.
7. G.C. to coordinate the installation of proximity devices. All areas shown to be roughed in with electrical as part of base bid. Coordinate requirements with proximity device vendor.
8. Storefront doors to be wide style door to accommodate panic device installation. Coordinate with contractor prior to fabrication.
9. All doors shall have thickness of 1-3/4" U.N.O.

DOOR SCHEDULE - ADD ALTERNATE #2

140 A			D7	001					•			•							•				
140 B	WASH BAY	EXTERIOR	D4	505	0' - 1 3/4"		•				•								•				
140 C			D7	001					•			•							•				
141 A	CHEMICAL STORAGE	WASH BAY	D4	205	0' - 1 3/4"		•				•								•				
141 B	CHEMICAL STORAGE	EXTERIOR	D3	205	0' - 1 3/4"		•				•								•				

PROFESSIONAL SEAL
REGISTERED ARCHITECT JUSTIN E. MYERS 24640 STATE OF TEXAS
JAN, 20, 2020

LOGO/CONTACT
martinez ARCHITECTS
Martinez Architect, LP
900 Rockmead, Suite 250
Houston, Texas 77339
281.346.7371

DESIGN TEAM
Architectural
Martinez Architects
Civil Engineer
Maverick Engineering
Structural
Matrix Structural engineers
M/E/P/T
DBR
Landscape Architect
KDC Associates

FIRE STATION #11

CITY OF MIDLAND
6600 BRIARWOOD AVE
MIDLAND, TX 79707

PROJECT No: **MA 18017**
DATE: **16-JAN-2020**

ISSUE
100% DESIGN DEVELOPMENT 22-MAY-2019
75% CONSTRUCTION DOCUMENT 26-JUN-2019
100% ISSUE FOR PERMIT 30-JUL-2019
100% ISSUE FOR BIDDING 30-JAN-2020

DOOR AND WINDOW SCHEDULE

A902

4.1602

NOTES:
TILE FLOOR FINISHES TO BE INSTALLED TO ROOM EXTENT (UNDER MILLWORK)

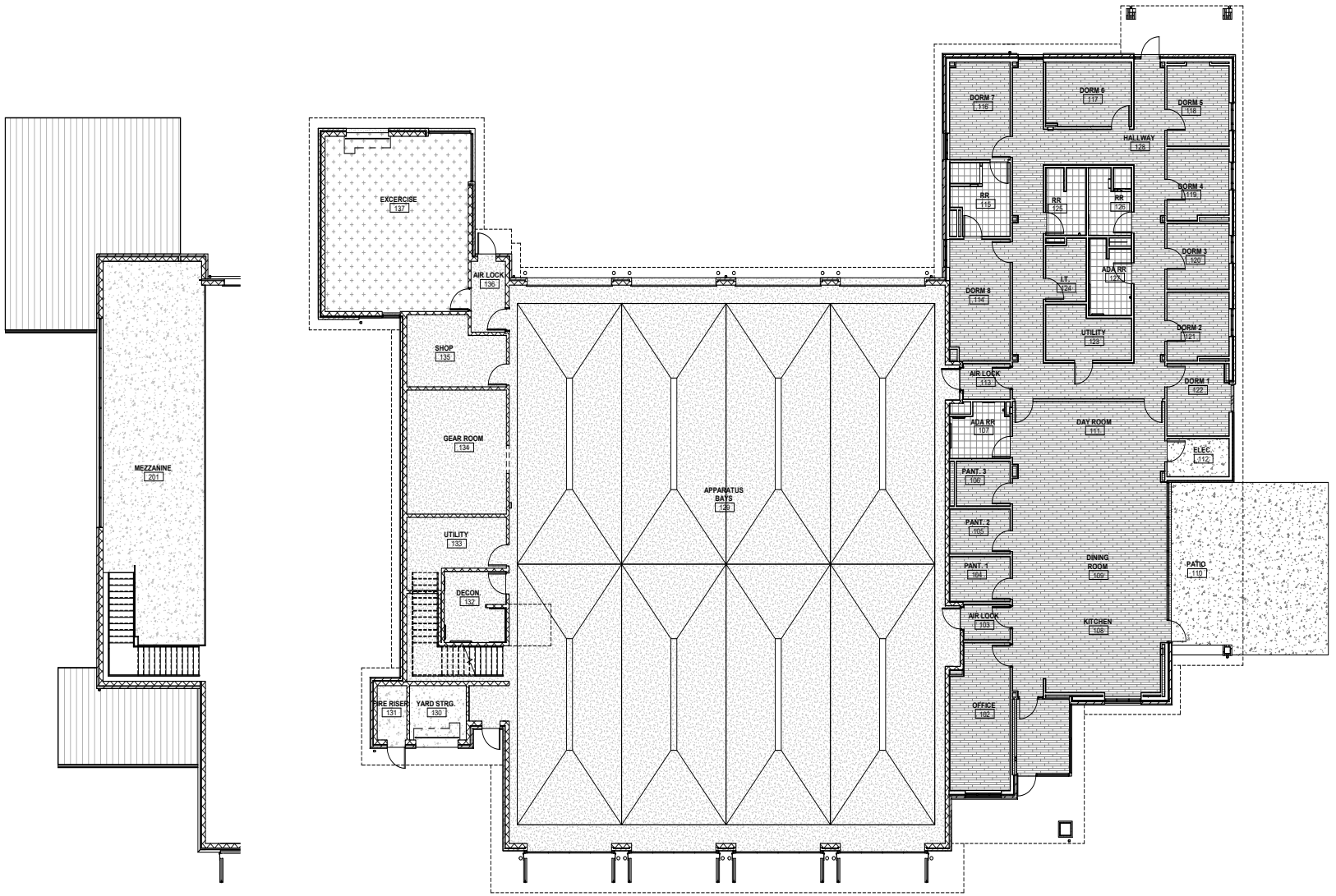

FLOOR FINISH LEGEND

LVT-01 EVENT - CLASSIC PLANK ECK 3321 AMERICAN OAK 3321 6" X 36"	**PORCELAIN TILE - 1** Cyrose - HONEY MAPLE CY32 6" X 48"	POLISHED CONCRETE, SC-1. (REFER TO SPECIFICATION 03 66 00)
RUBBER ATHLETIC FLOORING	PORCELAIN TILE (FT-2)	ABRASION & SLIP RESISTANT CONCRETE

TRUE NORTH / PROJECT NORTH

2 MEZZANINE - FINISH PLAN
SCALE: 1/8" = 1'-0"

1 LEVEL 1 - FINISH PLAN
SCALE: 1/8" = 1'-0"

4.1603

PROFESSIONAL SEAL

REGISTERED ARCHITECT JUSTIN E. MARTINEZ 24640 STATE OF TEXAS
JAN. 16, 2020

LOGO/CONTACT

martinez ARCHITECTS
Martinez Architect, LP
900 Rockmead, Suite 250
Houston, Texas 77339
281.346.7371

DESIGN TEAM

Architectural
Martinez Architects

Civil Engineer
Maverick Engineering

Structural
Matrix Structural engineers

M/E/P/T
DBR

Landscape Architect
KDC Associates

FIRE STATION #11

CITY OF MIDLAND
6600 BRIARWOOD AVE
MIDLAND, TX 79707

PROJECT No: **MA 18017**
DATE: **16-JAN-2020**

ISSUE
100% DESIGN DEVELOPMENT 22-MAY-2019
75% CONSTRUCTION DOCUMENT 26-JUN-2019
100% ISSUE FOR PERMIT 30-JUL-2019
100% ISSUE FOR BIDDING 30-JAN-2020

LEVEL 1 FINISH PLAN

A903

SPREAD FOOTING SCHEDULE

Mark	Length	Width	Thickness	Reinforcement Bottom (Short way)	Reinforcement Bottom (Long way)	Reinforcement Top (Short way)*	Reinforcement Top (Long way)*
F3	3' - 0"	3' - 0"	1' - 6"	(4)-#5	(4)-#5		
F4	4' - 0"	4' - 0"	1' - 6"	(4)-#5	(4)-#5		
F5	5' - 0"	5' - 0"	1' - 6"	(5)-#6	(5)-#6	(5)-#5	(5)-#5
F5.5	5' - 6"	5' - 6"	1' - 6"	(5)-#6	(5)-#6		
F6	6' - 0"	6' - 0"	1' - 6"	(6)-#6	(6)-#6	(6)-#5	(6)-#5
F7	7' - 0"	7' - 0"	1' - 6"	(7)-#7	(7)-#7		
F8	8' - 0"	8' - 0"	1' - 6"	(8)-#7	(8)-#7	(8)-#5	(8)-#5
F9x11	11' - 0"	9' - 0"	1' - 6"	(11)-#7	(9)-#7	(11)-#5	(9)-#5

* PROVIDE TOP BARS AT BRACE COLUMNS AND MOMENT FRAMES ONLY.

FOUNDATION PLAN NOTES:

1. ALL SPREAD FOOTINGS ARE CENTERED UNDER COLUMN CENTERLINES, U.N.O.
2. SPREAD FOOTINGS OCCURRING AT INTERMEDIATE LOCATIONS SHALL BE CENTERED AT GRADE BEAM CENTERLINE.
3. SEE ARCHITECTURAL DRAWINGS FOR EXACT LOCATION OF ALL FLOOR SLOPES, DEPRESSIONS, ETC.
4. COORDINATE ALL BRICK LEDGES AND DEPTH WITH ARCHITECTURAL DRAWINGS.
5. LOCATIONS NOTED THUS: 0' - 0" INDICATES TOP OF SLAB ELEVATION. VERIFY WITH CIVIL FOR CORRESPONDING CIVIL ELEVATION.
6. SEE DETAILS 6 & 9/S305 FOR BASE PLATES.
7. SEE 8/S301 & 7/S301 FOR ADDITIONAL REBAR AT OPENINGS AND RE-ENTRANT CORNERS IN SLAB-ON-GRADE.
8. PROVIDE CONTRACTION JOINTS AND DISCONTINUOUS SLAB REINFORCING AS SHOWN IN DETAIL 5/S301 & 4/S301.
9. FIELD VERIFY ALL EXISTING CONDITIONS AND DIMENSIONS PRIOR TO FABRICATION / CONSTRUCTION.
10. T.D. INDICATES TURNDOWN, SEE 2/S305.
11. TOP OF FOOTING ELEVATION SHALL BE -3'-0" UNLESS NOTED THUS: T.O.F. = X'-X"

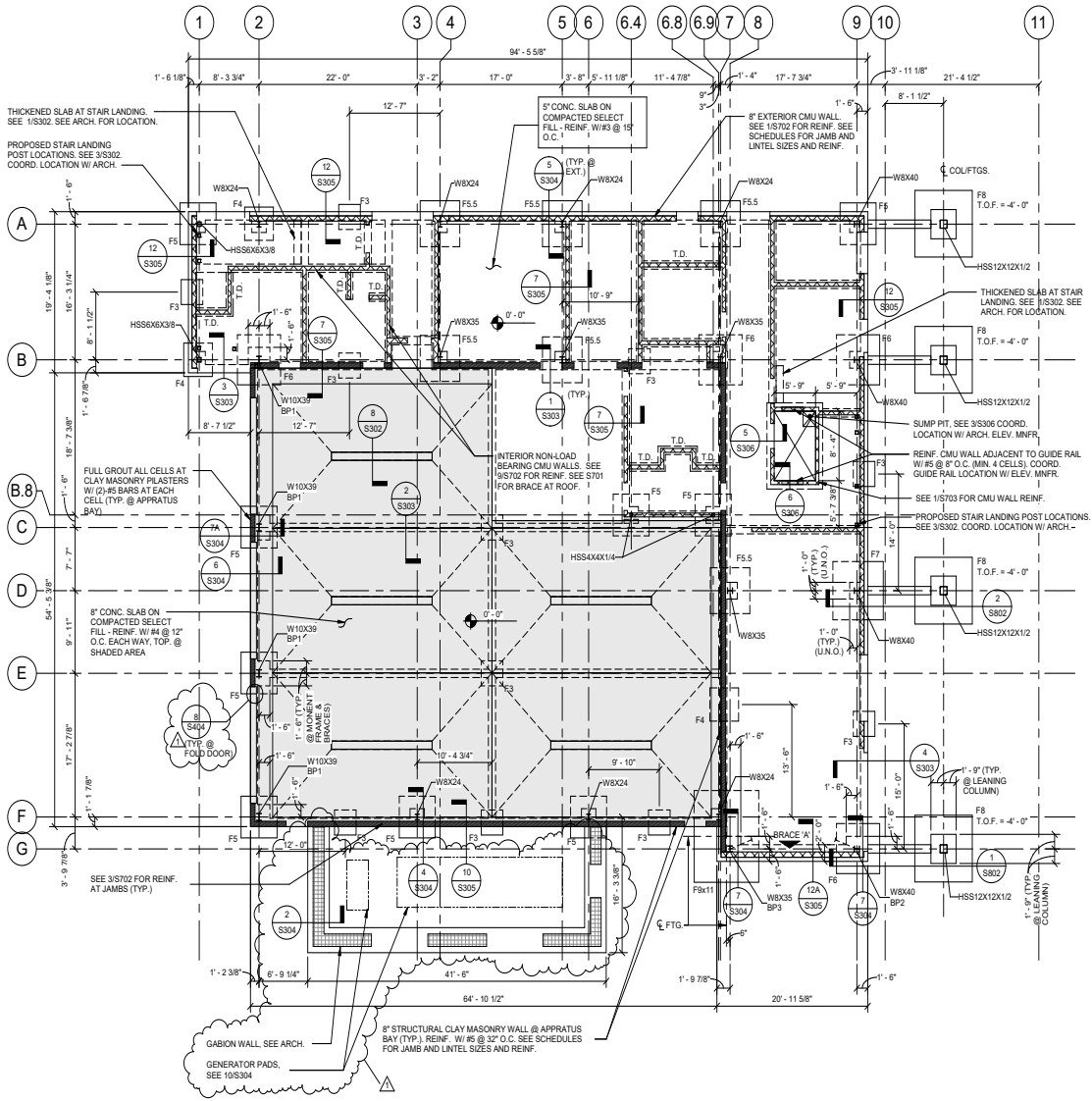

1 FOUNDATION PLAN
SCALE: 1/8" = 1'-0"

TRUE NORTH | PROJECT NORTH

PROFESSIONAL SEAL
Matrix Structural Engineers
TBPE Firm Registration No. F-2640
STATE OF TEXAS
ARNOLD A. KWAYSBATTEE
66260
REGISTERED PROFESSIONAL ENGINEER
02/19/20

LOGO/CONTACT
MATRIX STRUCTURAL ENGINEERS
5177 Richmond Avenue, Suite 670
Houston, TX 77056-2401
Tel: 713.664.0133
Fax: 713.664.1370
MSE - 18134

DESIGN TEAM
Architectural
Martinez Architects
Civil Engineer
Maverick Engineering
Structural
Matrix Structural Engineers
MEP
DBR
Landscaping
KDC Associates

FIRE STATION #5
CITY OF MIDLAND
2200 W GOLF COURSE RD
MIDLAND, TX 79701

PROJECT No: **MA 18017**
DATE: **01/30/2020**

No.	Date	Description
	05/21/19	100% DD
	07/30/19	100% ISSUE FOR PERMIT
	01/30/20	100% ISSUE FOR BIDDING
1	02/19/20	ADDENDUM 2

FOUNDATION PLAN

S201

4.1604

FLOOR PLAN NOTES:

1. TOP OF CONCRETE ELEVATION = SEE PLAN
2. LOCATIONS SHOWN THUS: (12) C=3/4" INDICATES NUMBER OF SHEAR CONNECTORS AS 12 AND UPWARD CAMBER AT MID SPAN OF BEAM AS 3/4"
3. SPACE JOISTS EQUALLY U.N.O.
4. PROVIDE END PLATES AT ALL TUBE BEAMS.
5. FIELD VERIFY ALL EXISTING CONDITIONS AND DIMENSIONS PRIOR TO FABRICATION / CONSTRUCTION.
2. SEE SHEET S201 FOR ALL COLUMN SIZES NOT SHOWN.
9. ▶ = MOMENT CONNECTION
   LSH = LONG SIDE HORIZONTAL
   LSV = LONG SIDE VERTICAL
10. CC: INDICATES CARRIED COLUMN, SEE DETAIL 7/S401.
11. ALL LOWER TUBE BEAM ELEVATIONS TO BE VERIFIED WITH ARCHITECT DRAWINGS.
12. FLOOR SHALL BE 3 1/2" NORMAL WEIGHT CONCRETE OVER THE FLUTES OF 2" x 18 GA TYPE VLI STEEL DECK AS MANUFACTURED BY VULCRAFT OR APPROVED EQUIVALENT TO TOTAL THICKNESS = 5 1/2". REINFORCE CONCRETE WITH #3 AT 18" O.C. EACH WAY. PLACE REBAR PERPENDICULAR TO BEAMS (PARALLEL TO DECK) IN THE OUTSIDE LAYER. WELD DECK USING 5/8"Ø NET EFFECTIVE PUDDLE WELDS.
    a. PERPENDICULAR BEARING : 36/4 PATTERN.
    b. PARALLEL BEARING AND EDGE : AT 12" O.C.
    c. SIDE SEAMS : SEAM WELDS AT 12" O.C.
13. (SC) INDICATES SLIP CRITICAL CONNECTION, SEE 10/S802 FOR DETAIL.

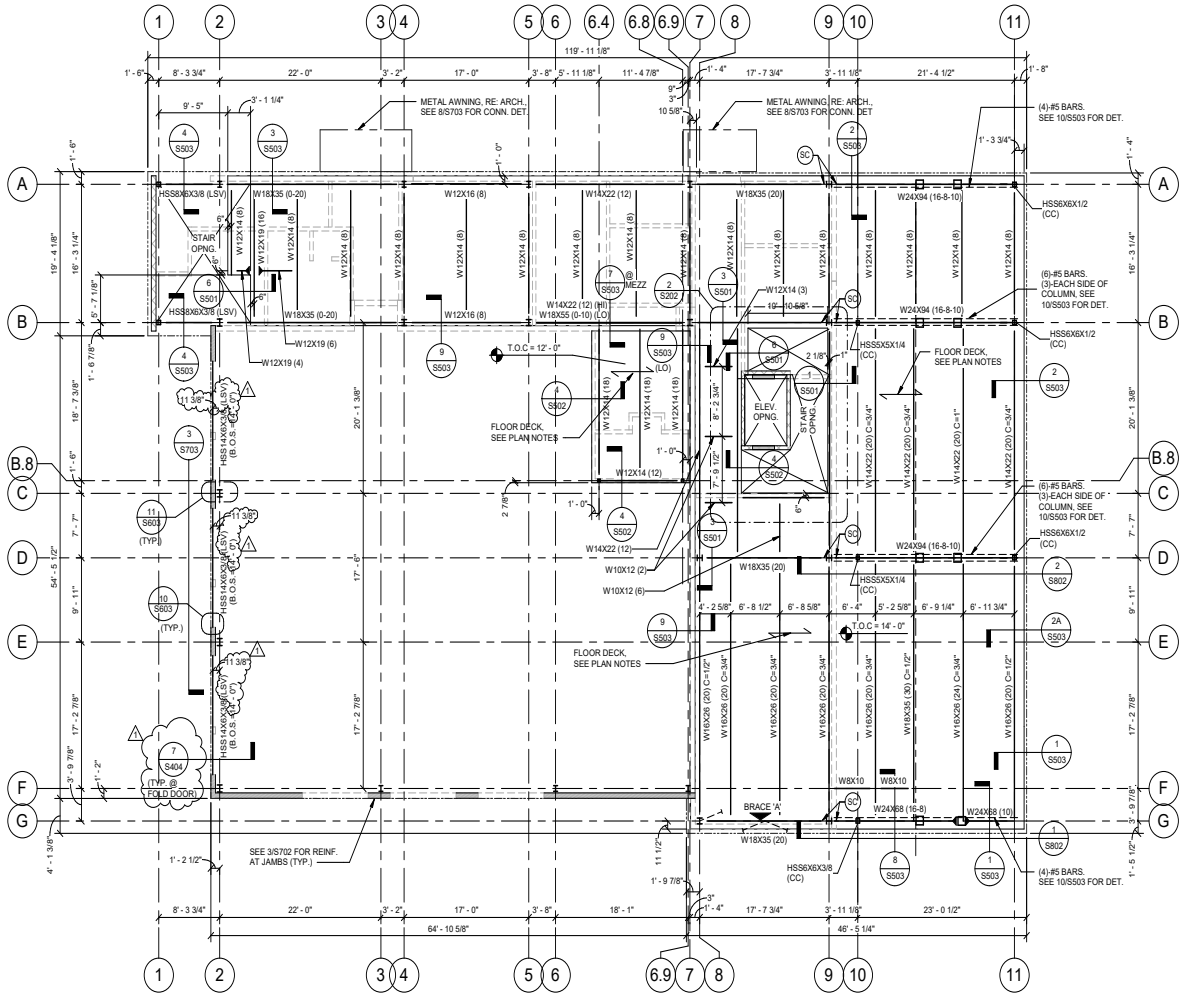

1 SECOND FLOOR FRAMING PLAN
SCALE: 1/8" = 1'-0"

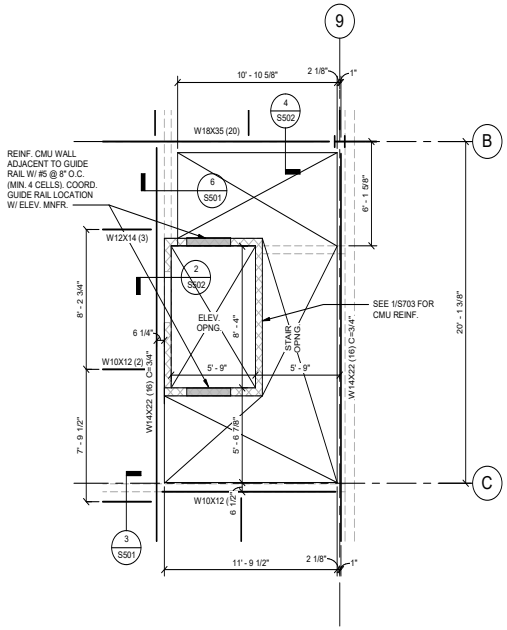

2 SECOND FLOOR FRAMING PLAN- ENLARGED AT ELEVATOR & STAIR OPENINGS
SCALE: 1/4" = 1'-0"

TRUE NORTH | PROJECT NORTH

PROFESSIONAL SEAL
Matrix Structural Engineers
TBPE Firm Registration No. F-2640
STATE OF TEXAS
ARNOLD A. KWAYSKITTE
66260
REGISTERED PROFESSIONAL ENGINEER
02/19/20

LOGO/CONTACT
MATRIX STRUCTURAL ENGINEERS
5177 Richmond Avenue, Suite 670
Houston, TX 77056-2401
Tel: 713.664.0133
Fax: 713.664.1370
MSE - 18134

DESIGN TEAM
Architectural
Martinez Architects
Civil Engineer
Maverick Engineering
Structural
Matrix Structural Engineers
MEP
DBR
Landscaping
KDC Associates

FIRE STATION #5
CITY OF MIDLAND
2200 W GOLF COURSE RD
MIDLAND, TX 79701

PROJECT No: **MA 18017**
DATE: **01/30/2020**

No.	Date	Description
	05/21/19	100% DD
	07/30/19	100% ISSUE FOR PERMIT
	01/30/20	100% ISSUE FOR BIDDING
1	02/19/20	ADDENDUM 2

SECOND FLOOR FRAMING PLAN

S202

4.1605

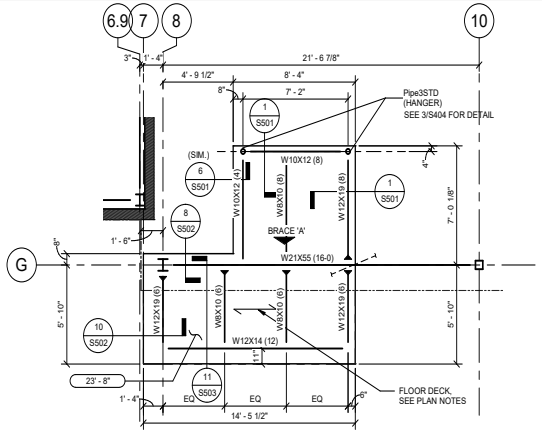

2 ENLARGED FRAMING PLAN AT RAPPELLING LEVEL

SCALE: 1/4" = 1'-0"

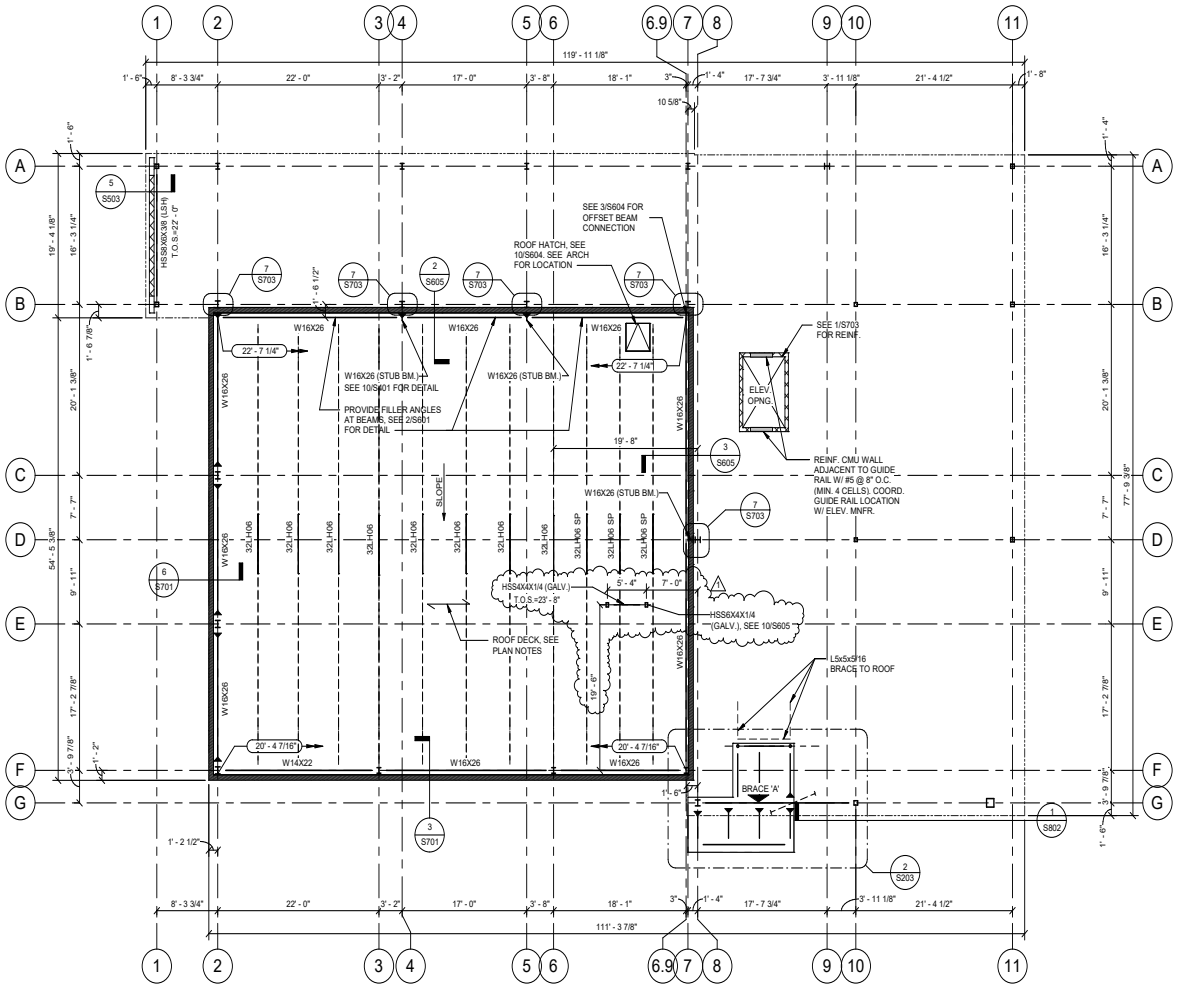

1 LOW ROOF FRAMING PLAN

SCALE: 1/8" = 1'-0"

ROOF FRAMING PLAN NOTES:

1. LOCATIONS SHOWN THUS: ( ) INDICATES TOP OF STEEL (T.O.S.) ELEVATION (TOP OF STEEL = TOP OF JOIST OR BOTTOM OF DECK).
2. FIELD VERIFY ALL EXISTING CONDITIONS AND DIMENSIONS PRIOR TO FABRICATION / CONSTRUCTION.
3. JOISTS SHALL BE DESIGNED FOR ADDITIONAL LOADS RESULTING FROM RTU'S AND OTHER MECHANICAL EQUIPMENT ON THE ROOF OR SUSPENDED FROM THE ROOF STRUCTURE. SEE ARCHITECTURAL AND MEP DRAWINGS FOR LOCATIONS.
4. SPACE JOISTS EQUALLY, U.N.O.
5. PROVIDE 3/16" CLOSURE PLATES AT ALL TUBE BEAMS.
6. REFER TO ARCHITECTURAL DRAWINGS / MEP FOR LOCATIONS OF ROOF DRAINS, OVERFLOW DRAINS AND TAPERED INSULATION.

7a. ROOF SHALL BE 1.5B, 22GA DECK AS MANUFACTURED BY VULCRAFT OR EQUIVALENT. SEE ARCHITECTURAL DRAWINGS FOR INSULATION, ROOFING, ETC. WELD DECK USING 5/8"Ø NET EFFECTIVE PUDDLE WELDS:
a. PERPENDICULAR BEARING: 36/7 PATTERN.
b. PARALLEL BEARINGS AND EDGE: AT 6"O.C.
c. SIDE SEAMS: #10 TEK SCREWS AT 12"O.C.

7c. IN LIEU OF THE DECK ATTACHMENT SHOWN ABOVE, ALTERNATE DECK ATTACHMENT SHALL BE AS FOLLOWS:
a. REPLACE EACH 5/8"Ø WELD WITH ONE HILTI X-HSN 24 FASTENER FOR BASE STEEL FLANGE THICKNESS (tf) ≤ 3/8" AT THICKER BASE STEEL USE ONE HILTI X-ENP-19-L15 TYPE FASTENER.
b. REPLACE EACH SIDE SEAM #10 SCREW WITH ONE HILTI S-SLC 01 M HWH FASTENER FOR DECK THICKNESS LESS THAN OR EQUAL TO 20 GAGE.
c. ATTACHMENTS SHALL BE INSTALLED IN STRICT ACCORDANCE WITH MANUFACTURER SPECIFICATIONS.

8. SEE SHEET S801 FOR BRACE ELEVATIONS.
10. SEE SHEET S201 FOR ALL COLUMN SIZES NOT SHOWN.
11. ▶— = MOMENT CONNECTION
LSH = LONG SIDE HORIZONTAL
LSV = LONG SIDE VERTICAL
HI = HIGH
LO = LOW
12. CC : INDICATES CARRIED COLUMN, SEE DETAIL 7/S401.
13. B.F.B. INDICATES BOTTOM FLANGE BRACE, SEE 1/S602 FOR DETAIL.
14. (SC) INDICATES SLIP CRITICAL CONNECTION, SEE 12/S402 FOR DETAIL.
15. SEE 1/S603 FOR BENT BEAM DETAIL.
16. (BRKN) INDICATES BROKEN BACK BEAM. SEE 3/S602 FOR DETAIL.

FLOOR PLAN NOTES:

1. TOP OF CONCRETE ELEVATION = SEE PLAN
2. LOCATIONS SHOWN THUS: (12) C=3/4" INDICATES NUMBER OF SHEAR CONNECTORS AS 12 AND UPWARD CAMBER AT MID SPAN OF BEAM AS 3/4"
3. SPACE JOISTS EQUALLY U.N.O.
4. PROVIDE END PLATES AT ALL TUBE BEAMS.
5. FIELD VERIFY ALL EXISTING CONDITIONS AND DIMENSIONS PRIOR TO FABRICATION / CONSTRUCTION.
2. SEE SHEET S201 FOR ALL COLUMN SIZES NOT SHOWN.
9. ▶— = MOMENT CONNECTION
LSH = LONG SIDE HORIZONTAL
LSV = LONG SIDE VERTICAL
10. CC: INDICATES CARRIED COLUMN, SEE DETAIL 7/S401.
11. ALL LOWER TUBE BEAM ELEVATIONS TO BE VERIFIED WITH ARCHITECT DRAWINGS.
12. FLOOR SHALL BE 3 1/2" NORMAL WEIGHT CONCRETE OVER THE FLUTES OF 2" x 18 GA TYPE VLI STEEL DECK AS MANUFACTURED BY VULCRAFT OR APPROVED EQUIVALENT TO TOTAL THICKNESS = 5 1/2". REINFORCE CONCRETE WITH #3 AT 18" O.C. EACH WAY. PLACE REBAR PERPENDICULAR TO BEAMS (PARALLEL TO DECK) IN THE OUTSIDE LAYER. WELD DECK USING 5/8"Ø NET EFFECTIVE PUDDLE WELDS:
a. PERPENDICULAR BEARING : 36/4 PATTERN.
b. PARALLEL BEARING AND EDGE : AT 12" O.C.
c. SIDE SEAMS : SEAM WELDS AT 12" O.C.
13. (SC) INDICATES SLIP CRITICAL CONNECTION, SEE 10/S802 FOR DETAIL.

TRUE NORTH

PROJECT NORTH

PROFESSIONAL SEAL

Matrix Structural Engineers
TBPE Firm Registration No. F-2640

STATE OF TEXAS
MARIOS A. KYRIAZIS
66260
REGISTERED
PROFESSIONAL ENGINEER

02/19/20

LOGO/CONTACT

MATRIX STRUCTURAL ENGINEERS

5177 Richmond Avenue, Suite 670
Houston, TX 77056-2401
Tel: 713.664.0133
Fax: 713.664.1370
MSE - 18134

DESIGN TEAM

Architectural
Martinez Architects

Civil Engineer
Maverick Engineering

Structural
Matrix Structural Engineers

MEP
DBR

Landscaping
KDC Associates

FIRE STATION #5
CITY OF MIDLAND
2200 W GOLF COURSE RD
MIDLAND, TX 79701

PROJECT No: **MA 18017**
DATE: **01/30/2020**

No.	Date	Description
	05/21/19	100% DD
	07/30/19	100% ISSUE FOR PERMIT
	01/30/20	100% ISSUE FOR BIDDING
1	02/19/20	ADDENDUM 2

LOW ROOF FRAMING PLAN

S203

4.1606

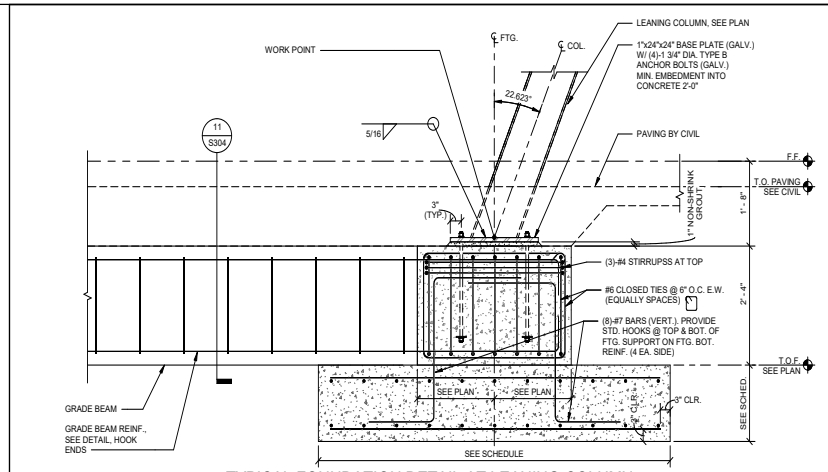

TYPICAL FOUNDATION DETAIL AT LEANING COLUMN

12 SCALE: 3/4" = 1'-0"

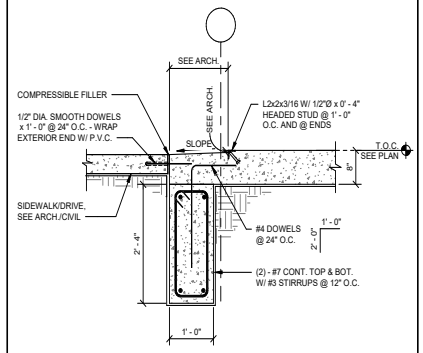

SLAB EDGE AT OVERHEAD DOORS

6 SCALE: 3/4" = 1'-0"

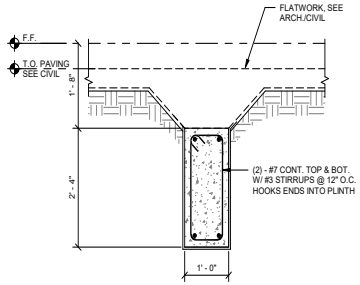

TYPICAL DETAIL
EXTERIOR GRADE BEAM
AT FLATWORK

11 SCALE: 3/4" = 1'-0"

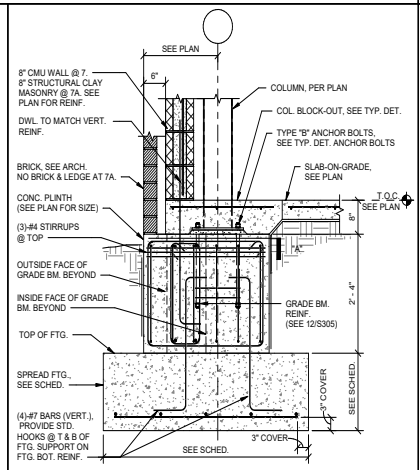

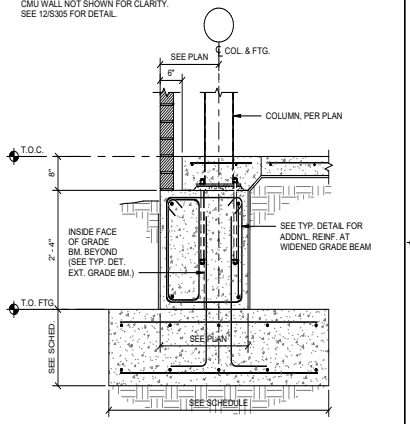

TYPICAL DETAIL
EXTERIOR GRADE BEAM AT COLUMN

5 SCALE: 3/4" = 1'-0"

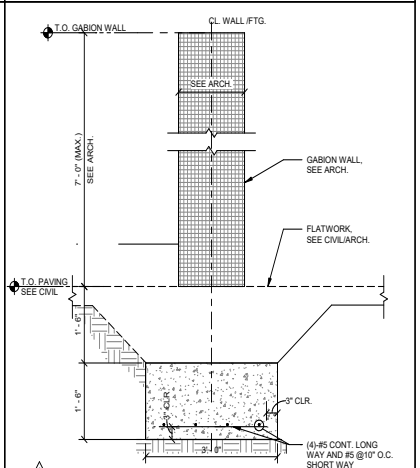

TYPICAL DETAIL AT GABION ROCK WALL

2 SCALE: 3/4" = 1'-0"

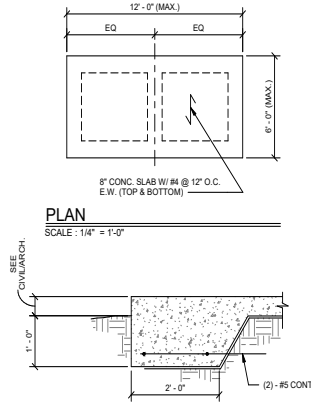

GENERATOR FOUNDATION

10 SCALE: N.T.S.

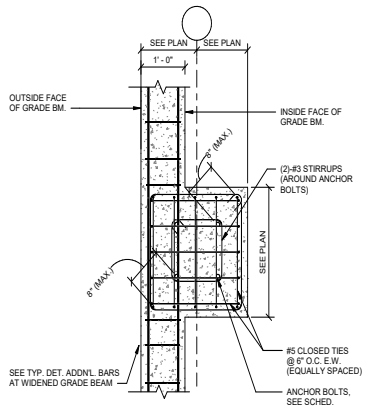

SECTION "A"

TYPICAL DETAIL
EXTERIOR GRADE BEAM AT BRACE
COLUMN/MOMENT FRAME

7A 7 SCALE: 3/4" = 1'-0"

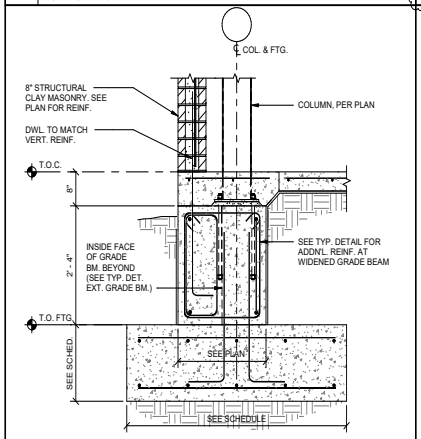

TYPICAL DETAIL
EXTERIOR GRADE BEAM AT COLUMN

4 SCALE: 3/4" = 1'-0"

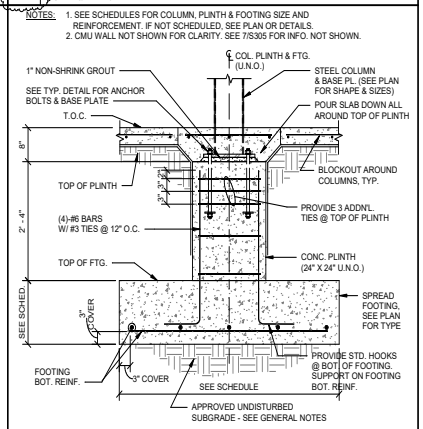

TYPICAL DETAIL
INTERIOR STEEL COLUMN ON SPREAD
FOOTING CONCRETE PLINTH

1 SCALE: 3/4" = 1'-0"

PROFESSIONAL SEAL

Matrix Structural Engineers
TBPE Firm Registration No. F-2640

STATE OF TEXAS
MARIOS A. KYRIAZIS
66260
REGISTERED PROFESSIONAL ENGINEER

02/19/20

LOGO/CONTACT

MATRIX STRUCTURAL ENGINEERS

5177 Richmond Avenue, Suite 670
Houston, TX 77056-2401
Tel: 713.664.0133
Fax: 713.664.1370
MSE - 18134

DESIGN TEAM

Architectural
Martinez Architects

Civil Engineer
Maverick Engineering

Structural
Matrix Structural Engineers

MEP
DBR

Landscaping
KDC Associates

FIRE STATION #5

CITY OF MIDLAND
2200 W GOLF COURSE RD
MIDLAND, TX 79701

PROJECT No: **MA 18017**
DATE: **01/30/2020**

No.	Date	Description
	05/21/19	100% DD
	07/30/19	100% ISSUE FOR PERMIT
	01/30/20	100% ISSUE FOR BIDDING
1	02/19/20	ADDENDUM 2

FOUNDATION DETAILS

S304

4.1607

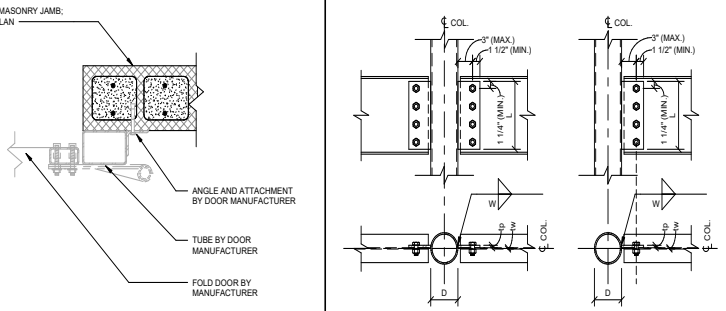

MAX. DESIGN END REACTION Ru (KIPS)*															
	STANDARD PIPE						X-STRONG PIPE				XX-STRONG PIPE				
L (IN.)	D = 4"	D = 5"	D = 6"	D = 8"	D = 10"	D = 12"	D = 4"	D = 5"	D = 6"	D = 8-12"	D = 4"	D = 5"	D = 6"	D = 8"	
5.5	20	21	23	27	30	31	28	31	36	42	56	63	73	74	
8.5	47	52	56	65	73	75	68	75	87	100	136	151	174	176	
11.5	87	95	103	119	134	138	124	138	159	184	249	277	319	323	
14.5	139	152	164	189	214	220	198	220	254	293	396	440	507	514	
17.5	203	221	239	275	312	320	289	320	370	427	576	642	739	749	
20.5	278	303	329	378	428	440	397	440	508	586	791	881	1014	1028	
23.5	366	399	432	497	563	578	521	578	667	770	1040	1158	1333	1351	
26.5	465	507	549	632	716	735	663	735	849	979	1323	1472	1695	1719	

* - D INDICATES NOMINAL PIPE DIAMETER

NOTES:
1. REFER TO GENERAL NOTES FOR BEAM REACTION DESIGN CRITERIA, REACTIONS SHOWN ARE FACTORED LOADS (LRFD).
2. PROVIDE PRE-DESIGNED CONNECTIONS AS SHOWN IN AISC MANUAL WHERE APPLICABLE.
3. REFER TO GENERAL NOTES FOR BOLT TYPE.
4. THIS CONNECTION MAY ONLY BE USED WITH THE GEOMETRY SHOWN ABOVE AND WHERE THE BEAM DESIGN REACTION IS LESS THAN THE VALUE SHOWN IN THE SCHEDULE. ALL VALUES SHOWN ARE ULTIMATE DESIGN (LRFD) VALUES.
5. tp AND/OR tw SHALL BE LESS THAN OR EQUAL TO 7/16" FOR CONNECTIONS WITH 2 TO 5 BOLTS. AND SHALL BE LESS THAN OR EQUAL TO 5/16" FOR CONNECTIONS WITH 6 OR MORE BOLTS.
6. W SHALL BE 5/8 (tp).
7. FOR TWO SIDED CONNECTIONS, ALL CRITERIA MUST BE MET AT BOTH SIDES.
8. THIS DETAIL IS NOT ALLOWED AT BRACED FRAMES OR OTHER AXIALLY LOADED CONNECTIONS.
9. SEE 6/S401 FOR THRU PLATE AND END BEARING CONNECTIONS WHERE THIS DETAIL DOES NOT APPLY.
10. PLATE DEPTH "L" SHALL NOT BE LESS THAN 1/2 THE "T" DIMENSION OF THE SUPPORTED BEAM.

TYPICAL DETAIL
SINGLE PLATE TO PIPE
WALL CONNECTION

4 SCALE: N.T.S.

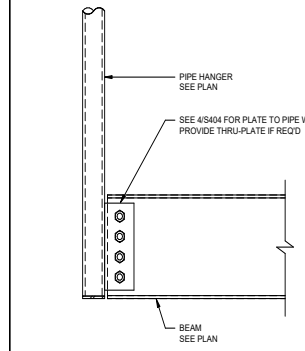

TYPICAL DETAIL
CONNECTION AT PIPE HANGER

3 SCALE: N.T.S.

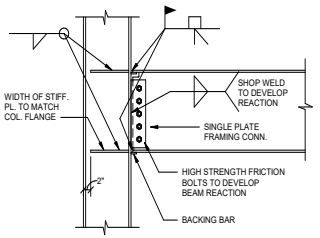

NOTE:
1. BOLTS IN WEB CONNECTION SHALL BE TIGHTENED PRIOR TO WELDING OF FLANGES.
2. U.N.O. FLANGE PLATES, BOLTS, AND WELDS SHOWN SHALL BE DESIGNED FOR AN AXIAL TENSION/COMPRESSION EQUAL TO 90% OF THE BEAM PLASTIC MOMENT CAPACITY DIVIDED BY THE DISTANCE BETWEEN FLANGE CENTROIDS. T=C=0.90Mp/(D-tf), WHERE DESIGN MOMENTS ARE PROVIDED THEY MAY BE USED IN LIEU OF THE AFOREMENTIONED CRITERIA. T=C=Mu/(D-tf)
3. WHERE MOMENTS ARE PROVIDED PJP WELDS MAY BE USED IN LIEU OF CJP WELDS. SEE NOTE 3 FOR DEIGN CRITERIA.

TYPICAL DETAIL
STEEL BEAM TO WIDE FLANGE COLUMN FLANGE
MOMENT CONNECTION

2 SCALE: N.T.S.

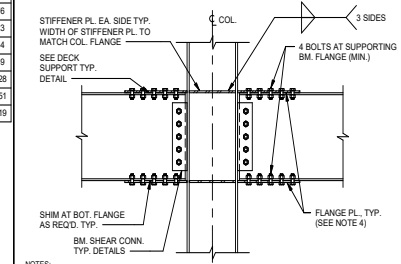

NOTES:
1. ALL BOLTED MOMENT AND AXIAL CONNECTIONS SHALL USE SLIP CRITICAL BOLTS. ALLOWABLE STRENGTH OF BOLTS SHALL BE BASED ON A CLASS "A" FAYING SURFACE. DO NOT PAINT STEEL AT SLIP CRITICAL CONNECTIONS.
2. U.N.O. FLANGE PLATES, BOLTS, AND WELDS SHOWN SHALL BE DESIGNED FOR AN AXIAL TENSION/COMPRESSION EQUAL TO 90% OF THE BEAM PLASTIC MOMENT CAPACITY DIVIDED BY THE DISTANCE BETWEEN FLANGE CENTROIDS. T=C=0.90Mp/(D-tf), WHERE DESIGN MOMENTS ARE PROVIDED THEY MAY BE USED IN LIEU OF THE AFOREMENTIONED CRITERIA. T=C=Mu/(D-tf)
3. THIS DETAIL MAY BE USED IN LIEU OF A FULLY WELDED MOMENT CONNECTION AT CONTRACTOR PREFERENCE EXCEPT WHERE PROHIBITED IN NOTE 4.
4. THIS DETAIL MAY NOT BE USED AT ROOF BEAMS WHERE THE DECK IS DIRECTLY ATTACHED TO THE BEAM OR WHERE BOLTS WILL INTERFERE WITH JOIST SEATS OR OTHER BEARING CONNECTIONS.
5. BOLTS IN FLANGE SHALL BE SIZED SUCH THAT THE CROSS-SECTIONAL AREA OF THE FLANGE IS NOT REDUCED BY MORE THAN 30%, ANY VARIANCE MUST BE SUBMITTED TO E.O.R. FOR APPROVAL.

ALTERNATE DETAIL
BEAM TO COLUMN FLANGE MOMENT
CONNECTION - BOLTED

1 SCALE: N.T.S.

FOLD DOOR SUPPORT DETAIL AT JAMB

8 SCALE: 1 1/2" = 1'-0"

NOTE:
SEE 3/S703 FOR CAST STONE/ AND SUN SHADE SUPPORT DETAIL

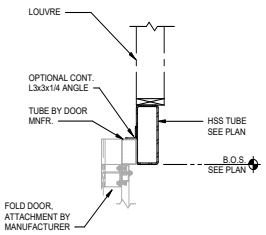

FOLD DOOR SUPPORT DETAIL AT HEADER

7 SCALE: 3/4" = 1'-0"

4.1608

PROFESSIONAL SEAL

Matrix Structural Engineers
TBPE Firm Registration No. F-2640

02/19/20

LOGO/CONTACT

MATRIX STRUCTURAL ENGINEERS

5177 Richmond Avenue, Suite 670
Houston, TX 77046-2401
Tel: 713.664.0133
Fax: 713.664.1370
MSE - 18134

DESIGN TEAM

Architectural
Martinez Architects

Civil Engineer
Maverick Engineering

Structural
Matrix Structural Engineers

MEP
DBR

Landscaping
KDC Associates

FIRE STATION #5
CITY OF MIDLAND
2200 W GOLF COURSE RD
MIDLAND, TX 79701

PROJECT No: **MA 18017**
DATE: **01/30/2020**

No.	Date	Description
	05/21/19	100% DD
	07/30/19	100% ISSUE FOR PERMIT
	01/30/20	100% ISSUE FOR BIDDING
1	02/19/20	ADDENDUM 2

FRAMING DETAILS

S404

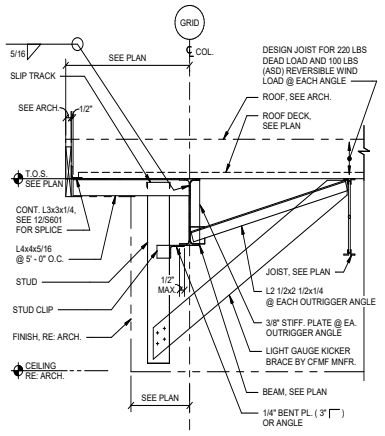

12 ROOF FRAMING DETAIL 2

SCALE: 3/4" = 1'-0"

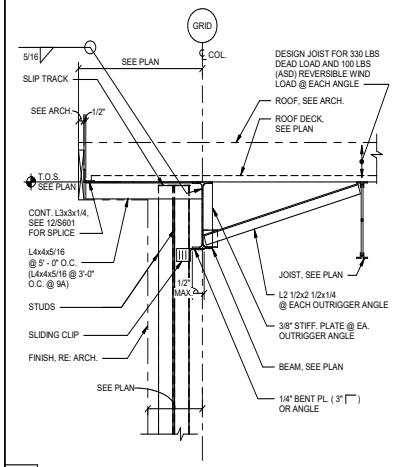

9A

9 ROOF FRAMING DETAIL

SCALE: 3/4" = 1'-0"

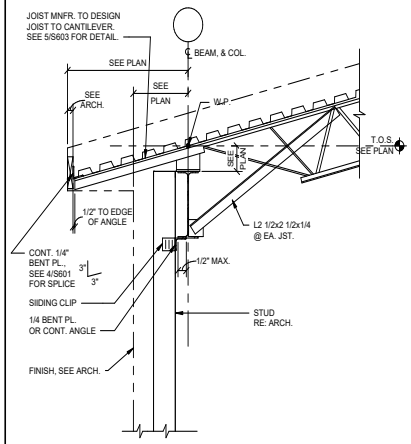

6 TYPICAL DETAIL
SLOPED OPEN WEB JOIST AT ROOF EDGE

SCALE: 3/4" = 1'-0"

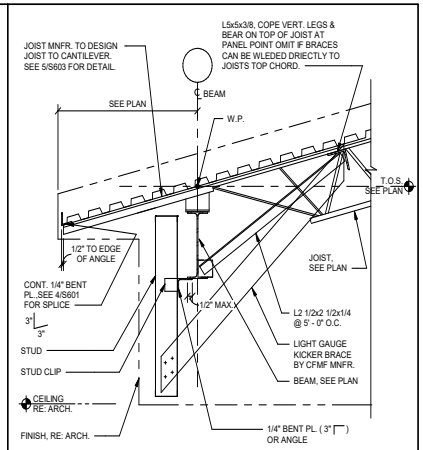

3 TYPICAL DETAIL
SLOPED OPEN WEB JOIST AT ROOF EDGE

SCALE: 3/4" = 1'-0"

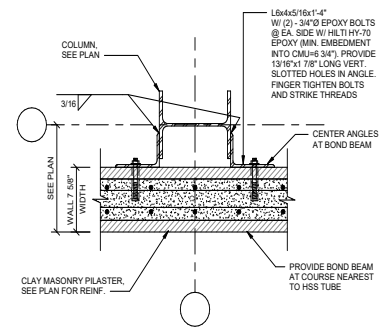

11 CLAY MASONRY WALL TO COLUMN CONNECTION1

SCALE: 1 1/2" = 1'-0"

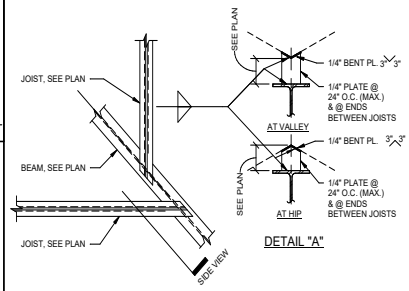

DETAIL "A"

PLAN VIEW

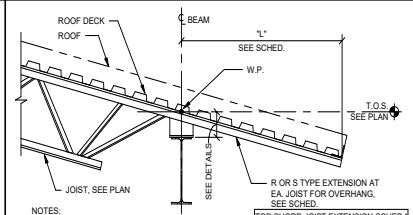

NOTES:
1. CONTRACTOR/JOIST MNFR. MAY CHOOSE EITHER TYPE JOIST EXTENSION SHOWN (OR LARGER) FOR "L" ≤ MAX. "L" SHOWN.
2. FOR ANY "L" JOIST, MNFR. MAY DESIGN JOIST EXTENSION FOR THE FOLLOWING CRITERIA IN LIEU OF SIZE SHOWN, U.N.O.:
TL = 240 PLF
TOTAL DEFLECTION ≤ 2 x "L" / 240
LL = 120 PLF
LIVE LOAD DEFLECTION < 2 x "L" / 360
MNFR. SHALL ACCOUNT FOR SKIP LOADING OF LIVE LOADS.
3. LOADS ON JOIST EXTENSIONS SHOWN ON PLAN OR IN DETAILS SHALL BE IN ADDITION TO THOSE SHOWN HERE. DEFLECTION CRITERIA SHALL REMAIN THE SAME AS SHOWN ABOVE. THE SCHEDULE SHOWN HERE DOES NOT APPLY WHERE ADDITIONAL LOADS ARE SHOWN.

TOP CHORD JOIST EXTENSION SCHED.*		
MAX. "L"	R-TYPE	S-TYPE
≤ 1' - 6"	R1	S3
2' - 0"	R1	S7
2' - 6"	R1	S10
3' - 0"	R1	S12
3' - 6"	R1	N/A
4' - 0"	R3	N/A
4' - 6"	R8	N/A
5' - 0"	R11	N/A
≥ 5' - 6"	DESIGN SPECIAL EXTENSION	

*CONTRACTOR/FABRICATOR MAY CHOOSE EITHER TYPE JOIST EXTENSION FOR "L" ≤ MAX. "L" SHOWN

5 TYPICAL DETAIL
K-JOIST EXTENSION SCHEDULE

SCALE: N.T.S.

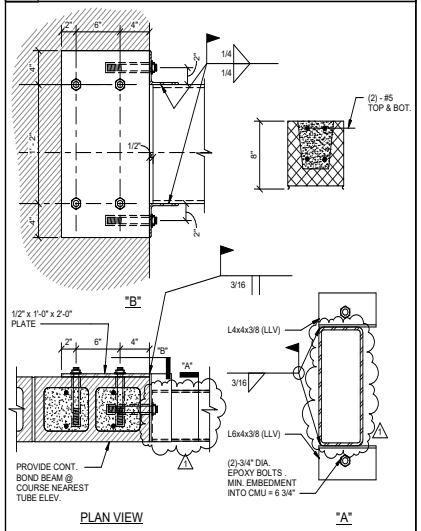

PLAN VIEW "A"

10 HSS TUBE AT CLAY MASONRY WALL

SCALE: 1 1/2" = 1'-0"

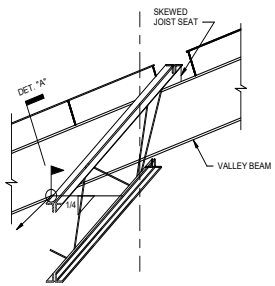

SECTION VIEW

7 DETAIL AT HIP AND VALLEY

SCALE: N.T.S.

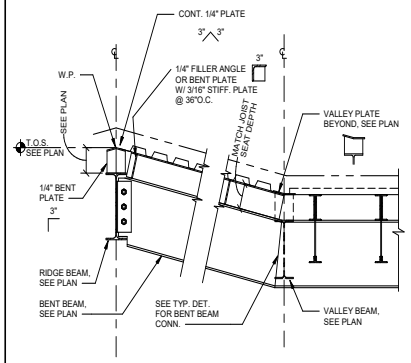

4 TYPICAL DETAIL
CHANGE IN DECK DIRECTION AT BENT BEAM

SCALE: N.T.S.

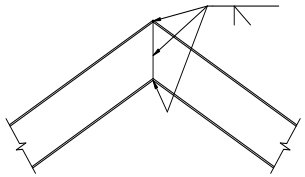

1 TYPICAL DETAIL
BENT BEAM

SCALE: N.T.S.

PROFESSIONAL SEAL
Matrix Structural Engineers
TBPE Firm Registration No. F-2640
STATE OF TEXAS
ARNOLD A. KWAN
66260
LICENSED PROFESSIONAL ENGINEER
02/19/20

LOGO/CONTACT
MATRIX STRUCTURAL ENGINEERS
5177 Richmond Avenue, Suite 670
Houston, TX 77046-2401
Tel: 713.664.0133
Fax: 713.664.1370
MSE - 18134

DESIGN TEAM

Architectural
Martinez Architects

Civil Engineer
Maverick Engineering

Structural
Matrix Structural Engineers

MEP
DBR

Landscaping
KDC Associates

FIRE STATION #5
CITY OF MIDLAND
2200 W GOLF COURSE RD
MIDLAND, TX 79701

PROJECT No: **MA 18017**
DATE: **01/30/2020**

No.	Date	Description
	05/21/19	100% DD
	07/30/19	100% ISSUE FOR PERMIT
	01/30/20	100% ISSUE FOR BIDDING
1	02/19/20	ADDENDUM 2

ROOF FRAMING DETAILS

S603

4.1609

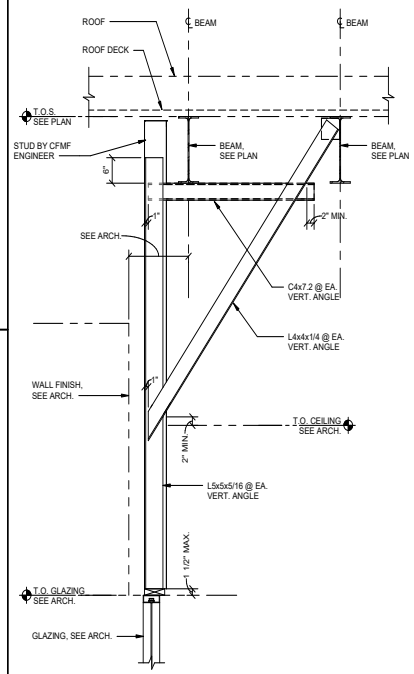

8 SCALE: 3/4" = 1'-0"

BRACING AT GLAZING

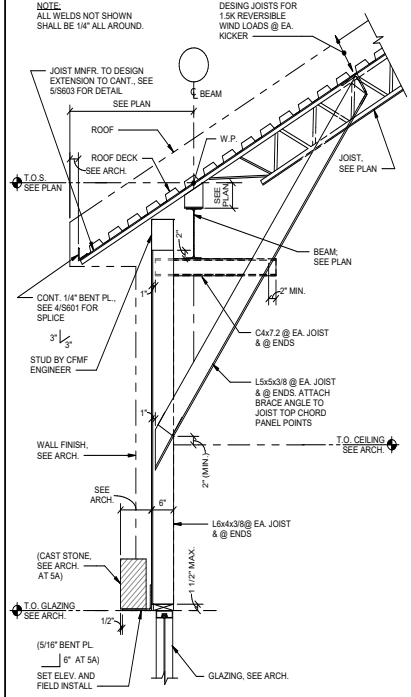

5A
5 SCALE: 3/4" = 1'-0"

ROOF FRAMING DETAIL

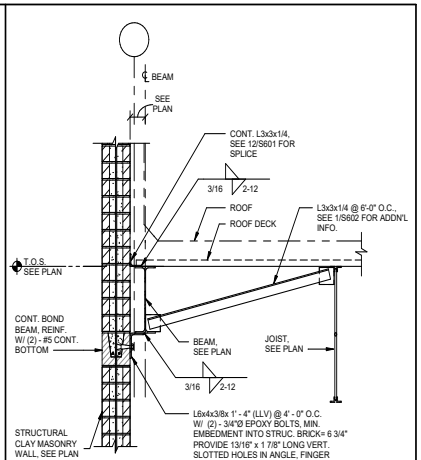

3 SCALE: 3/4" = 1'-0"

ROOF FRAMING DETAIL AT STRUCTURAL BRICK WALL

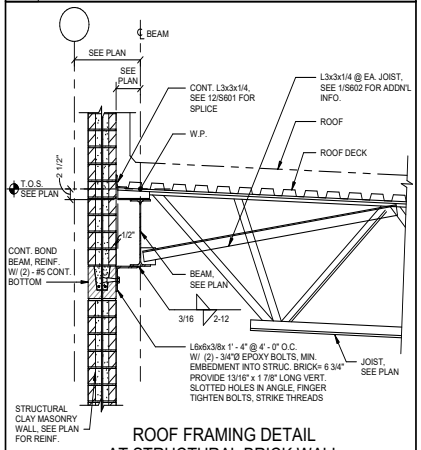

2 SCALE: 3/4" = 1'-0"

ROOF FRAMING DETAIL AT STRUCTURAL BRICK WALL

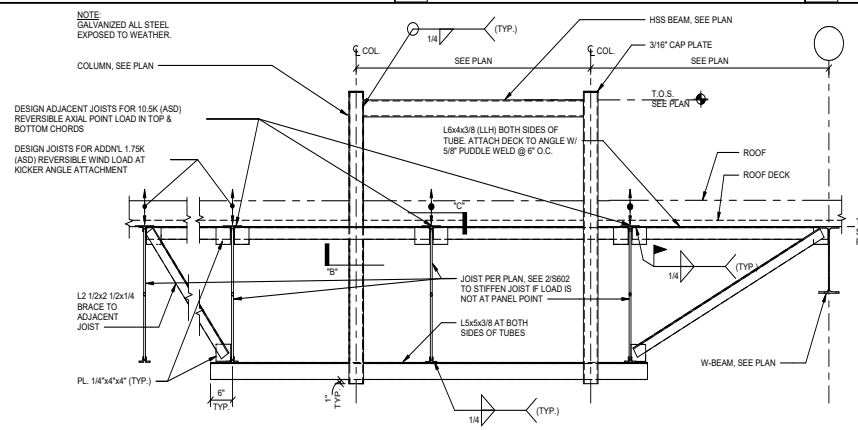

10 SCALE: 3/4" = 1'-0"

TYPICAL DETAIL AT TUBE COLUMN AT RAPPELLING RAIL SUPPORT

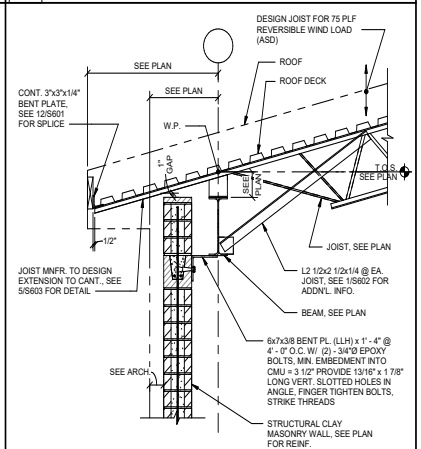

1 SCALE: 3/4" = 1'-0"

ROOF FRAMING DETAIL

4.1610

PROFESSIONAL SEAL

Matrix Structural Engineers
TBPE Firm Registration No. F-2640

STATE OF TEXAS
ARNOOL A. KHATRATTEE
66260
REGISTERED
PROFESSIONAL
ENGINEER

02/19/20

LOGO/CONTACT

MATRIX STRUCTURAL ENGINEERS

5177 Richmond Avenue, Suite 670
Houston, TX 77056-2401
Tel: 713.664.0133
Fax: 713.664.1370
MSE - 18134

DESIGN TEAM

Architectural
Martinez Architects

Civil Engineer
Maverick Engineering

Structural
Matrix Structural Engineers

MEP
DBR

Landscaping
KDC Associates

FIRE STATION #5
CITY OF MIDLAND
2200 W GOLF COURSE RD
MIDLAND, TX 79701

PROJECT No: **MA 18017**
DATE: **01/30/2020**

No.	Date	Description
	05/21/19	100% DD
	07/30/19	100% ISSUE FOR PERMIT
	01/30/20	100% ISSUE FOR BIDDING
1	02/19/20	ADDENDUM 2

ROOF FRAMING DETAILS

S605

THROUGH BOLT AT CANTILEVER		
CANTILEVER LENGTH	MAX. CONN. SPACING	THROUGH BOLT DIA.
5'-0"	12'-0"	3/8"
	15'-0"	1/2"
8'-0"	8'-0"	1/2"
	12'-0"	5/8"
10'-0"	8'-0"	5/8"
	11'-0"	3/4"

THREADED ROD W/ HY-270 AT CANTILEVER			
CANTILEVER LENGTH	MAX. CONN. SPACING	THREADED ROD	
		DIA.	EMBEDMENT
3'-0"	5'-0"	3/8"	3 3/8"
	12'-0"	3/8"	3 3/8"
5'-0"	5'-0"	1/2"	4 1/2"
	8'-0"	5/8"	5 5/8
	10'-0"	3/4"	6 3/4"

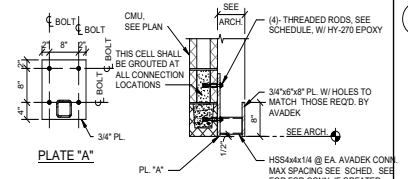

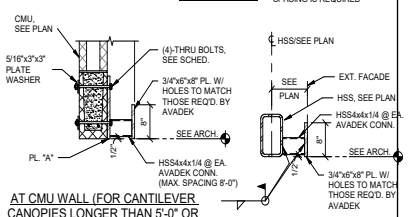

NOTE:
CONCTRACTOR SHALL CONFIRM SPACING FROM CANOPY SUPPLIER PRIOR TO FABRICATION & SUBMIT SHOP SRAWINSS FOR APPROVAL.

8 TYPICAL DETAIL
AT AVADEK CANOPY CONNECTION
SCALE: 3/4" = 1'-0"

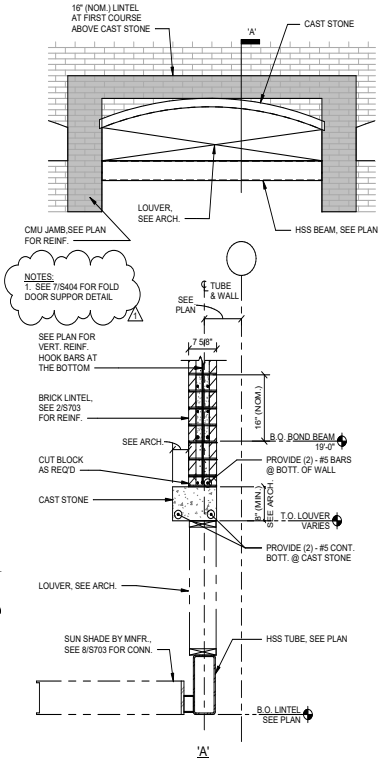

STRUCTURAL BRICK ELEVATION AT CAST STONE/LOUVER
3 SCALE: 1/4" = 1'-0"

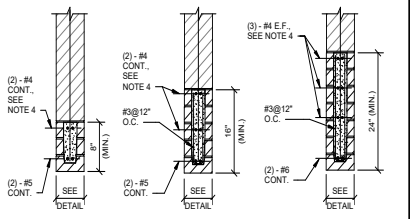

FOR OPENING LESS THAN 5' - 0" WIDE | FOR OPENING 5' - 0" TO 8' - 0" WIDE | FOR OPENING OVER 8' - 0" UP TO 14' - 6" WIDE

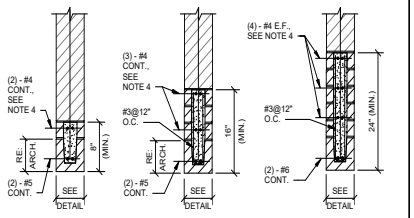

TYPICAL SOLDIER COURSE FOR OPENING LESS THAN 5' - 0" WIDE | TYPICAL SOLDIER COURSE FOR OPENING 5' - 0" T0 TO 8' - 0" WIDE | TYPICAL SOLDIER COURSE FOR OPENING FOR OPENING OVER 8' - 0" UP TO 14' - 6" WIDE

NOTES:
1. SEE ARCH. DRAWINGS FOR SIZE AND LOCATION OF OPENINGS.
2. PROVIDE 1" OF BEARING @ EACH JAMB FOR EACH FOOT OF CLEAR SPAN BUT NOT LESS THAN 8". REINF. SHALL PROJECT A MIN. OF 6" ONTO THE BEARING CMU.
3. BOND BEAMS SHALL BE FULLY GROUTED (2500 PSI @ 28 DAYS).
4. THE #4 BARS ARE ONLY REQUIRED AT EXTERIOR CMU WALLS.

2 TYPICAL DETAIL
EXTERIOR CLAY MASONRY BLOCK LINTEL
SCALE:NTS

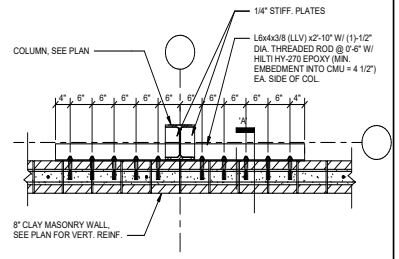

COLUMN TO CLAY MASONRY WALL CONNECTION
7 SCALE: 3/4" = 1'-0"

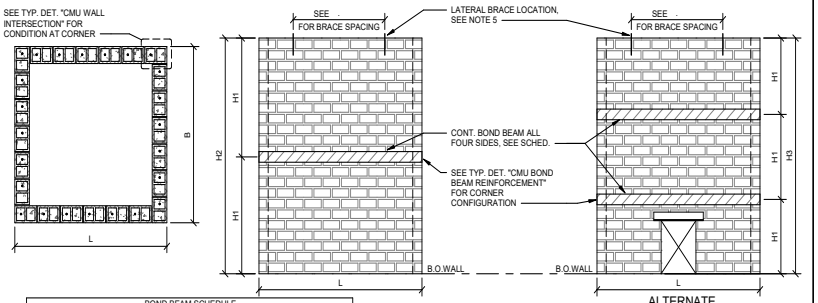

BOND BEAM SCHEDULE						
L OR B	6" WALL		8" WALL		12" WALL	
	BEAM DEPTH	REINF.	BEAM DEPTH	REINF.	BEAM DEPTH	REINF.
8'	8"	(2)-#5B	8"	(2)-#5B	8"	(2)-#5B
10'	8"	(2)-#5B (2)-#5T	8"	(2)-#5B	8"	(2)-#5B
15'	16"	(2)-#5B (2)-#5M (2)-#5T	8"	(2)-#5B (2)-#5T	8"	(2)-#5B
18'	N/A	N/A	16"	(2)-#5B (2)-#5T	8"	(2)-#5B
24'	N/A	N/A	N/A	N/A	16"	(2)-#5B (2)-#5T

NOTES:
1. WHERE H EXCEEDS MAXIMUM SPECIFIED IN TYPICAL DETAIL " NON-LOAD BEARING INTERIOR CMU WALLS BRACING & REINFORCING STEEL " PROVIDE CONT. BOND BEAM AS SHOWN.
2. WHERE CONT. BOND BEAMS ARE USED, WALLS SHALL BE REINFORCED FOR HEIGHT = H1, OTHERWISE REINFORCE WALLS FOR HEIGHT = H2 OR H3
3. SEE TYP. DET. "BOND BEAM AT CONTROL JOINTS" WHERE CONTROL JOINTS INTERSECT BOND BEAM. BOND BEAM SHALL BE TREATED AS A FLOOR (DIAPHRAGM) LEVEL CONDITION
4. H2 SHALL NOT EXCEED 32'-0", H3 SHALL NOT EXCEED 48'-0".
5. IN LIEU OF INTERIOR BRACES AT THE TOP OF WALL CONTRACTOR MAY PROVIDE A BOND BEAM AT THE TOP OF WALL SIZED & REINFORCED PER THE SCHEDULE SHOWN.

1 TYPICAL DETAIL
TALL RECTANGULAR INTERIOR NON-LOAD BEARING CMU WALL BRACING
SCALE: 3/4" = 1'-0"

PROFESSIONAL SEAL
Matrix Structural Engineers
TBPE Firm Registration No. F-2640
STATE OF TEXAS
ARNOLD A. KWAYSBATTEE
66260
LICENSED PROFESSIONAL ENGINEER
02/19/20

LOGO/CONTACT
MATRIX STRUCTURAL ENGINEERS
5177 Richmond Avenue, Suite 670
Houston, TX 77056-2401
Tel: 713.664.0133
Fax: 713.664.1370
MSE - 18134

DESIGN TEAM
Architectural
Martinez Architects
Civil Engineer
Maverick Engineering
Structural
Matrix Structural Engineers
MEP
DBR
Landscaping
KDC Associates

FIRE STATION #5
CITY OF MIDLAND
2200 W GOLF COURSE RD
MIDLAND, TX 79701

PROJECT No: **MA 18017**
DATE: **01/30/2020**

No.	Date	Description
	05/21/19	100% DD
	07/30/19	100% ISSUE FOR PERMIT
	01/30/20	100% ISSUE FOR BIDDING
1	02/19/20	ADDENDUM 2

MASONRY DETAILS

S703

4.1611

A. GENERAL

1. ALL WORK SHALL CONFORM TO THE MINIMUM STANDARDS OF THE FOLLOWING CODES. THE CODES LISTED SHALL INCLUDE ALL AMENDMENTS AND ADDENDA IN FORCE AT THE DATE OF THE CONTRACT DOCUMENTS.

   2015 EDITION OF THE INTERNATIONAL BUILDING CODE

2. WHERE CONFLICT EXISTS AMONG THE VARIOUS PARTS OF THE STRUCTURAL AND ARCHITECTURAL CONTRACT DOCUMENTS THE STRICTEST REQUIREMENTS SHALL GOVERN.
3. CONTRACTOR SHALL FIELD VERIFY ALL DIMENSIONS AND EXISTING CONDITIONS AT THE JOB SITE AND REPORT ANY DISCREPANCIES OR INCONSISTENCIES FROM ASSUMED CONDITIONS TO THE ARCHITECT PRIOR TO FABRICATION AND CONSTRUCTION.
4. DETAILS LABELED "TYPICAL DETAILS" ON THE DRAWINGS SHALL APPLY TO ALL SITUATIONS OCCURRING ON THE PROJECT THAT ARE THE SAME OR SIMILAR TO THOSE SPECIFICALLY DETAILED. SUCH DETAILS APPLY WHETHER OR NOT THEY ARE CUT AT EACH LOCATION. QUESTIONS REGARDING APPLICABILITY OF TYPICAL DETAILS SHALL BE DETERMINED BY THE ENGINEER.
5. DO NOT SCALE THE DRAWINGS.
6. THE GENERAL CONTRACTOR SHALL COMPARE THE ARCHITECTURAL AND STRUCTURAL DRAWINGS AND REPORT ANY DISCREPANCY BETWEEN EACH SET OF DRAWINGS AND WITHIN EACH SET OF DRAWINGS TO THE ARCHITECT AND ENGINEER PRIOR TO THE FABRICATION AND INSTALLATION OF ANY STRUCTURAL MEMBERS.
7. IT IS THE RESPONSIBILITY OF THE GENERAL CONTRACTOR TO OBTAIN ALL CONTRACT DOCUMENTS AND LATEST ADDENDA AND TO SUBMIT SUCH DOCUMENTS TO ALL SUBCONTRACTORS AND MATERIAL SUPPLIERS PRIOR TO THE SUBMITTAL OF SHOP DRAWINGS, FABRICATION OF ANY STRUCTURAL MEMBERS, AND ERECTION IN THE FIELD.
8. IT IS THE RESPONSIBILITY OF THE CONTRACTOR TO PROVIDE ALL MEASURES NECESSARY TO PROTECT THE STRUCTURE DURING CONSTRUCTION. SUCH MEASURES SHALL INCLUDE, BUT ARE NOT LIMITED TO, BRACING AND SHORING FOR LOADS DUE TO HYDROSTATIC, EARTH, WIND OR SEISMIC FORCES, AND CONSTRUCTION EQUIPMENT. OBSERVATION VISITS TO THE SITE BY THE ENGINEER SHALL NOT INCLUDE INSPECTION OF THE ABOVE ITEMS.
9. THE CONTRACT STRUCTURAL DRAWINGS AND SPECIFICATIONS REPRESENT THE FINISHED STRUCTURE. THEY DO NOT INDICATE THE METHOD OF CONSTRUCTION. THE CONTRACTOR SHALL SUPERVISE AND DIRECT THE WORK AND SHALL BE SOLELY RESPONSIBLE FOR ALL CONSTRUCTION MEANS, METHODS, PROCEDURES, TECHNIQUES, AND SEQUENCE.
10. PERIODIC SITE OBSERVATION BY THE ENGINEER IS SOLELY FOR THE PURPOSE OF DETERMINING IF THE WORK OF THE CONTRACTOR IS PROCEEDING IN GENERAL ACCORDANCE WITH THE STRUCTURAL CONTRACT DOCUMENTS. THIS LIMITED SITE OBSERVATION SHOULD NOT BE CONSTRUED AS EXHAUSTIVE OR CONTINUOUS TO CHECK THE QUALITY OF THE WORK, BUT RATHER PERIODIC IN AN EFFORT TO GUARD THE OWNER AGAINST DEFECTS OR DEFICIENCIES IN THE WORK OF THE CONTRACTOR.
11. NOTIFY THE STRUCTURAL ENGINEER WHEN DRAWINGS BY OTHERS SHOW OPENINGS, POCKETS, ETC., NOT SHOWN ON THE STRUCTURAL DRAWINGS, BUT WHICH ARE LOCATED IN THE STRUCTURAL MEMBERS.
12. DO NOT PENETRATE ANY STRUCTURAL ELEMENTS (BEAMS, COLUMNS, WALLS, SLABS, ETC.) WITHOUT PRIOR WRITTEN APPROVAL OF STRUCTURAL ENGINEER.
13. NOTES AND DETAILS ON DRAWINGS SHALL TAKE PRECEDENCE OVER GENERAL STRUCTURAL NOTES AND TYPICAL DETAILS. WHERE NO SPECIFIC DETAILS ARE SHOWN, CONSTRUCTION SHALL CONFORM TO SIMILAR WORK ON THE PROJECT.
14. SEE THE ARCHITECTURAL DRAWINGS FOR THE FOLLOWING:

    SIZE AND LOCATION OF DOOR AND WINDOW OPENINGS,
    SIZE AND LOCATION OF INTERIOR AND EXTERIOR NON-LOAD BEARING PARTITIONS, SIZE AND LOCATION OF CONCRETE CURBS, FLOOR DRAINS, SLOPES, DEPRESSED AREAS, CHAMFERS, GROOVES, INSERTS, ETC., SIZE AND LOCATION OF FLOOR AND ROOF OPENINGS, FLOOR AND ROOF FINISHES,
    STAIR FRAMING AND DETAILS, DIMENSIONS NOT SHOWN ON THE STRUCTURAL DRAWINGS, CEILING AND EXTERIOR WALL ASSEMBLIES.

15. SEE THE MECHANICAL, PLUMBING, AND ELECTRICAL DRAWINGS FOR THE FOLLOWING:

    PIPES, SLEEVES, HANGERS, TRENCHES, WALL, FLOOR AND ROOF OPENINGS, DUCT PENETRATIONS, ETC., EXCEPT AS SHOWN OR NOTED OTHERWISE ELECTRICAL CONDUIT RUNS, BOXES, OUTLETS IN WALLS AND SLABS, CONCRETE INSERTS FOR ELECTRICAL, MECHANICAL, OR PLUMBING FIXTURES, SIZE AND LOCATION OF MACHINE OR EQUIPMENT BASES AND ANCHOR BOLTS FOR MOUNTS.

B. DESIGN CRITERIA

1. DEAD LOAD MATERIALS ASSUMED IN THE DESIGN ARE SHOWN ON THE ARCHITECTURAL AND STRUCTURAL DRAWINGS.
2. AN ALLOWANCE OF 15 PSF HAS BEEN MADE FOR PARTITIONS AS A UNIFORMLY DISTRIBUTED LIVE LOAD, WHEREVER PARTITIONS ARE USED AND LOCATION SUBJECT TO CHANGE EXCLUDING PUBLIC LOBBIES, CORRIDORS, RESTROOMS, AND PLACES OF PUBLIC ASSEMBLY.
3. LIVE LOADS:

LOCATION	UNIFORM LOAD	CONCENTRATED LOAD
ROOF	20 PSF REDUCIBLE	300 LBS
BALCONIES	100 PSF REDUCIBLE	
TYPICAL FLOOR	40 PSF REDUCIBLE	
CORRIDORS	100 PSF REDUCIBLE	
STAIRS AND EXITS	100 PSF REDUCIBLE	300 LBS
STORAGE	150 PSF REDUCIBLE	
GROUND FLR, COMMON AREAS	100 PSF REDUCIBLE	
HANDRAILS AND GUARDRAILS	50 PLF OR 200 LBS APPLIED AT TOP RAIL IN ANY DIRECTION. 50 LBS IN ANY DIRECTION APPLIED AT INTERMEDIATE RAILS.	
GRAB BARS		250 LBS ANY DIRECTION
APPARATUS BAY	250 PSF REDUCIBLE	

4. WIND LOADS

ULTIMATE WIND SPEED	120 MPH (3-SEC GUST)
NOMINAL WIND SPEED	93 MPH (3-SEC GUST)
RISK CATEGORY	IV
EXPOSURE CATEGORY	B
INTERNAL PRESSURE COEFF.	+/- 0.18
COMPONENTS & CLADDING	SEE PLAN

5. SEISMIC LOADS

   RISK CATEGORY IV
   SITE CLASS D
   IMPORTANCE FACTOR 1.5
   MAPPED ACCELERATION PARAMETERS
   SS: 0.126g
   S1: 0.035g
   SPECTRAL RESPONSE COEFFICIENTS
   SDS: 0.134g
   SD1: 0.055g
   SEISMIC DESIGN CATEGORY A
   SEISMIC DESIGN NOT REQUIRED PER SECTION 11-7 OF ASCE 7-10

6. SNOW LOADS
   FLAT-ROOF SNOW LOAD: 4.2 PSF
   EXPOSURE FACTOR: 1.0
   IMPORTANCE FACTOR I=1.2
   THERMAL FACTORS Ct=1.0

7. HANDRAILS, GUARDRAILS AND GRAB BARS (INCLUDING ATTACHMENT TO STRUCTURE) SHALL BE DESIGNED BY THE FABRICATOR FOR THE LOADS INDICATED IN THE REFERENCED BUILDING CODE. SHOP DRAWINGS SHALL BE SEALED BY A PROFESSIONAL ENGINEER IN THE STATE OF WHERE THE PROJECT IS LOCATED, REPRESENTING THE FABRICATOR.
8. STAIRS SHALL BE DESIGNED BY THE STEEL FABRICATOR FOR CODE REQUIRED LOADS. SHOP DRAWINGS SHALL BE SEALED BY A PROFESSIONAL ENGINEER IN THE STATE OF WHERE THE PROJECT IS LOCATED, REPRESENTING THE FABRICATOR.

C. FOUNDATION

1. THE FOUNDATION DESIGN IS BASED ON THE FOLLOWING GEOTECHNICAL REPORT (AND ANY ADDENDA) PREPARED BY THE FOLLOWING COMPANY:

   COMPANY: BEYOND
   REPORT NO. GT1902006
   DATED: 04/11/2019

   ALL RECOMMENDATIONS THEREIN THAT RELATE TO THE WORK SHOWN ON THESE DRAWINGS SHALL BE FOLLOWED.

2. THE FOUNDATION SYSTEM IS DESIGNED BASED ON THE FOLLOWING

   ALLOWABLE BEARING PRESSURE
   SUSTAINED LOAD: 3000 PSF

3. THE GENERAL CONTRACTOR SHALL NOTIFY THE GEOTECHNICAL ENGINEER OR OTHER AUTHORIZED INSPECTOR FOR REVIEW OF FOUNDATION BEARING SURFACE, INSPECTION OF FOUNDATION INSTALLATION, AND PLACEMENT OF REINFORCING STEEL. THE CONTRACTOR SHALL NOT PLACE CONCRETE WITHOUT INSPECTOR'S APPROVAL.
4. THE CONTRACTOR SHALL NOTIFY THE AUTHORIZED INSPECTOR 48 HOURS IN ADVANCE OF ANY MAJOR FOUNDATION POUR.
5. FORM EXPOSED FACES OF GRADE BEAMS.
6. GRADE BEAM BOTTOM STEEL SHALL BE CHAIRED AT 5 FOOT MAXIMUM CENTERS USING BEAM BOLSTERS PROVIDING 3 INCH BOTTOM COVER TO REINFORCING STEEL. BEAM BOLSTERS USED SHALL BE INTENDED FOR SUPPORT ON SOIL.
7. BOTTOM BARS OF GRADE BEAM SHALL BE SPLICED (WHERE REQUIRED) AT THE PIERS ONLY. TOP BARS SHALL BE SPLICED (WHERE REQUIRED) AT THE MIDSPAN OF THE GRADE BEAMS. LAP LENGTH SHALL BE 44 TIMES BAR DIAMETER UNLESS SPECIFIED OTHERWISE. PROVIDE CORNER BARS TO MATCH TOP AND BOTTOM STEEL.
8. SLAB ON GRADE CONSTRUCTION SHALL FOLLOW THE RECOMMENDATIONS OF GUIDE FOR CONCRETE FLOOR AND SLAB CONSTRUCTION ACI 302.1R. PROVIDE (3) #3 X 4'-0" TOP AND BOTTOM AT ALL SLAB ON GRADE RE-ENTRANT CORNERS.
9. SUBGRADE PREPARATION SHALL CONFORM TO THE SOILS REPORT NOTED ABOVE. IF REPORT DOES NOT SPECIFY THE AMOUNT OF SELECT FILL, PROVIDE FILL AS REQUIRED ABOVE TO REDUCE PVR TO 1 INCH.
10. VAPOR RETARDER SHALL HAVE NO MORE THAN 0.01 PERMS AS TESTED BEFORE AND AFTER MANDATORY CONDITIONING (ASTM E 1745 SECTION 7.1 AND SUB-PARAGRAPHS 7.1.2-5), MEET OR EXCEED THE REQUIREMENTS OF ASTM E 1745 CLASS A AND BE NO LESS THAN 15 MILS THICK.
11. ALL VAPOR RETARDER SEAMS SHALL BE OVERLAPPED A MINIMUM OF 6 INCHES AND TAPED WITH MANUFACTURER'S TAPE. ALL PENETRATIONS, BLOCK-OUTS, AND OPENINGS SHALL BE SEALED USING A COMBINATION OF THE VAPOR RETARDER, MASTIC AND MANUFACTURER'S TAPE.
12. THE BEARING STRATUM OF EACH SPREAD FOOTING AND ALL STRIP FOOTINGS SHALL BE INSPECTED AND APPROVED BY THE GEOTECHNICAL ENGINEER OR OTHER AUTHORIZED INSPECTOR PRIOR TO POURING OF CONCRETE.
13. PROVIDE AND INSTALL 1/8 INCH STEEL TEMPLATES TO ACCURATELY SET ANCHOR BOLTS FOR STEEL COLUMNS.
14. FOOTINGS SHALL BE NEAT EXCAVATED WHERE POSSIBLE WITH SIDES AND TOP EDGES FREE OF LOOSE OR WET MATERIALS. WHERE NEAT EXCAVATION IS NOT POSSIBLE, FOOTING EXCAVATION SHALL BE OPEN CUT WITH EDGES FORMED AND BRACED. ALL FOOTINGS WITH FORMED EDGES SHALL BE BACKFILLED FROM BOTTOM TO TOP OF FOOTING WITH LEAN CONCRETE OR CEMENT STABILIZED SAND. THE BOTTOM EXCAVATION SHALL BE CLEAN AND DRY WITH ALL LOOSE MATERIAL REMOVED FOR AN ESSENTIALLY FLAT BEARING SURFACE. EXCAVATIONS SHALL NOT BE LEFT OVERNIGHT UNLESS A 2 INCH UNREINFORCED SEAL (MUD) SLAB IS PLACED AT THE BOTTOM OF THE FOOTING EXCAVATION. WHERE SOFT OR UNSUITABLE BEARING SURFACES ARE ENCOUNTERED, THE AREA SHALL BE UNDERCUT AS REQUIRED AND REPLACED WITH COMPACTED FILL, CEMENT STABILIZED SAND, OR CONCRETE AS DIRECTED BY THE GEOTECHNICAL ENGINEER. FILL MATERIAL, IF USED, SHALL BE COMPACTED IN 6 INCHES MAXIMUM LOOSE LIFTS TO A MINIMUM 95% OF STANDARD PROCTOR DENSITY (ASTM D 698) UNLESS SPECIFIED OTHERWISE BY THE GEOTECHNICAL ENGINEER.

D. CONCRETE

1. ALL ASPECTS OF WORK RELATING TO THE CONCRETE CONSTRUCTION SHALL CONFORM TO THE FOLLOWING CODES AND SPECIFICATIONS:

   ACI 318-14 BUILDING CODE REQUIREMENTS FOR STRUCTURAL CONCRETE
   ACI 301-11 SPECIFICATIONS FOR STRUCTURAL CONCRETE FOR BUILDINGS
   CRSI MANUAL OF STANDARD PRACTICE

2. STRUCTURAL CONCRETE 28-DAY COMPRESSIVE STRENGTHS AND TYPES ARE AS FOLLOWS:

LOCATION	STRENGTH	TYPE	AGGREGATE SIZE
DRILLED PIERS	3000 PSI	NORMAL WT	1 1/2"
GRADE BEAMS	3000 PSI	NORMAL WT	1"
PLINTHS	3000 PSI	NORMAL WT	1"
SLAB-ON-GRADE			
TYPICAL	3000 PSI	NORMAL WT	1 1/2"
APPARATUS BAY & WASH BAY	4000 PSI	NORMAL WT	1 1/2"
METAL DECK SLAB	3000 PSI	NORMAL WT	3/4"

3. THERE SHALL BE NO HORIZONTAL COLD JOINT IN ANY CONCRETE POUR.
4. ADMIXTURES USED SHALL BE COMPATIBLE WITH FLOOR TREATMENTS. FINISH APPLICATOR SHALL APPROVE ADMIXTURES AND CURING COMPOUNDS PRIOR TO USE.
5. CONCRETE FOR SLAB-ON-GRADE SHALL HAVE A MAXIMUM WATER-CEMENT RATIO OF 0.45. ALL OTHER CONCRETE SHALL HAVE A MAXIMUM WATER-CEMENT RATIO OF 0.50. ADJUST CONCRETE STRENGTH BEYOND MINIMUM SPECIFIED ABOVE TO MAINTAIN MAXIMUM WATER-CEMENT RATIO.
6. CONCRETE FOR SLAB-ON-GRADE AND METAL DECK SHALL BE PROPORTIONED FOR A MAXIMUM ALLOWABLE UNIT SHRINKAGE OF 0.04% (400 MICROSTATIONS) AT 28 DAYS OF DRYING. LENGTH CHANGE SHALL BE MEASURED IN ACCORDANCE WITH ASTM C157.
7. FLY ASH CONFORMING TO ASTM C618, MAY BE USED UNLESS NOTED OTHERWISE. THE MAXIMUM AMOUNT OF FLY ASH SHALL BE 25% OF THE TOTAL CEMENTITIOUS MATERIAL BY WEIGHT.
8. CONCRETE FORMS SHALL BE LAID OUT AND CONSTRUCTED TO PROVIDE THE SPECIFIED CAMBERS INDICATED ON THE STRUCTURAL DRAWINGS.
9. SUBMIT SHOP DRAWINGS TO ARCHITECT AND ENGINEER INDICATING LOCATIONS OF CONCRETE JOINTS TO REVIEW PRIOR TO PLACING CONCRETE. PLACE JOINTS AT LOCATIONS TO MINIMIZE THE EFFECTS OF SHRINKAGE AS WELL AS BEING PLACED AT POINTS OF LOW STRESS.
10. ROUGHEN CONCRETE SURFACES TO 1/4 INCH AMPLITUDE WHERE MASONRY WALLS INTERSECT CONCRETE OR WHERE NEW CONCRETE INTERFACES WITH EXISTING CONCRETE.
11. MECHANICAL PIPES AND ELECTRICAL CONDUITS WHICH PASS THROUGH SLAB-ON-GRADE, CONCRETE ON METAL DECK, FRAMED CONCRETE FLOORS, AND WALLS DO NOT REQUIRE SLEEVES UNLESS NOTED OTHERWISE ON THE PROJECT SPECIFICATIONS, MECHANICAL OR ELECTRICAL DRAWINGS. IF SLEEVES ARE REQUIRED, INSTALL SLEEVES BEFORE PLACING CONCRETE. DO NOT CUT ANY REINFORCING WHICH MAY INTERFERE WITH SLEEVE PLACEMENT. CORING OPENINGS IN CONCRETE IS NOT PERMITTED. NOTIFY THE ARCHITECT AND ENGINEER IN ADVANCE OF CONDITIONS NOT SHOWN ON THE STRUCTURAL DRAWINGS. NO PIPES OR ELECTRICAL CONDUIT SHALL PASS THROUGH CONCRETE BEAMS OR COLUMNS UNLESS SPECIFICALLY DETAILED.
12. WITH THE EXCEPTION OF SLABS ON GRADE AND CONCRETE ON METAL DECK, THE OUTSIDE DIAMETER OF MECHANICAL PIPES AND/OR ELECTRICAL CONDUITS (OTHER THAN THOSE PASSING THROUGH) SHALL NOT EXCEED 1/3 OF THE SLAB THICKNESS AND SHALL BE CENTERED BETWEEN THE TOP AND BOTTOM REINFORCING UNLESS SPECIFICALLY DETAILED OTHERWISE. CONCENTRATIONS OF MECHANICAL PIPES AND/OR ELECTRICAL CONDUITS SHALL BE AVOIDED EXCEPT WHERE DETAILED OPENINGS ARE PROVIDED. CONDUIT AND PIPE SHALL BE SPACED AT 3" OR 3 DIAMETERS ON CENTER, WHICHEVER IS GREATER.
13. FOR SLABS ON GRADE AND METAL DECK SLABS NO PIPES OR CONDUITS SHALL BE PLACED WITHIN THE INDICATED SLAB THICKNESS AND SHALL BE LOCATED BELOW THE SLAB UNLESS SPECIFICALLY DETAILED OTHERWISE.
14. THE DESIGN, CONSTRUCTION, AND SAFETY OF ALL FORMWORK SHALL BE THE RESPONSIBILITY OF THE GENERAL CONTRACTOR. ALL FORMS, SHORES, BACKSHORES, FALSEWORK, BRACING, AND OTHER TEMPORARY SUPPORTS SHALL BE ENGINEERED TO SUPPORT ALL LOADS IMPOSED INCLUDING THE WET WEIGHT OF CONCRETE, CONSTRUCTION EQUIPMENT, LIVE LOADS, LATERAL LOADS DUE TO WIND AND WET CONCRETE IMBALANCE. THE CONTRACTOR SHALL ALSO BE RESPONSIBLE FOR DETERMINING WHEN TEMPORARY SUPPORTS, SHORES, BACKSHORES, AND OTHER BRACING MAY BE SAFELY REMOVED.

E. REINFORCING STEEL

1. ALL ASPECTS OF WORK RELATING TO THE REINFORCING STEEL SHALL CONFORM TO THE FOLLOWING CODES AND SPECIFICATIONS:

   ACI 318-14 BUILDING CODE REQUIREMENTS FOR STRUCTURAL CONCRETE CRSI MANUAL OF STANDARD PRACTICE

2. DEFORMED BARS SHALL CONFORM TO THE REQUIREMENTS OF ASTM A615 GRADE 60.
3. WELDED WIRE FABRIC SHALL CONFORM TO THE REQUIREMENTS OF ASTM A185, YIELD STRENGTH 65,000 PSI. WELDED DEFORMED WIRE FABRIC FOR ASTM A497, YIELD STRENGTH 70,000 PSI. ALL WELDED WIRE FABRIC SHALL BE FURNISHED IN FLAT SHEETS ONLY. WHEREVER WELDED WIRE FABRIC IS SPECIFIED AS REINFORCEMENT, IT SHALL BE CONTINUOUS ACROSS THE ENTIRE CONCRETE SURFACE AND NOT INTERRUPTED BY BEAMS OR GIRDERS AND PROPERLY LAPPED ONE CROSS WIRE SPACING PLUS 2 INCHES.
4. MINIMUM LAP OF WELDED WIRE FABRIC SHALL BE 6 INCHES OR ONE FULL MESH AND ONE HALF, WHICHEVER IS GREATER.
5. WELDING OF REINFORCING IS PERMITTED ONLY WHERE SHOWN ON THE DRAWINGS OR WHEN APPROVED BY THE ENGINEER OF RECORD. WELDING OF REINFORCING BARS SHALL BE WITH LOW HYDROGEN ELECTRODES IN ACCORDANCE WITH THE RECOMMENDED PRACTICES OF AWS D1.4.
6. ALL REINFORCING BAR BENDS SHALL BE MADE COLD.
7. REINFORCING DOWELS BETWEEN FOOTINGS AND WALLS OR COLUMNS SHALL BE THE SAME NUMBER, SIZE, SPACING, AND GRADE AS THE SPECIFIED VERTICAL REINFORCING, UNO.
8. IN ADDITION TO ALL OF THE REINFORCING STEEL INDICATED ON THE DRAWINGS, THE CONTRACTOR SHALL PROVIDE FOR AN ALLOWANCE OF A NET 1/2 TON OF REINFORCING BARS TO BE FURNISHED, FABRICATED, AND PLACED DURING THE PROGRESSION OF WORK AS MAY BE DIRECTED BY THE ENGINEER OF RECORD.
9. CLEAR COVERAGE OF CONCRETE OVER REINFORCING BARS SHALL BE AS FOLLOWS:

LOCATION OF CONCRETE	MINIMUM COVER
CONCRETE CAST AGAINST AND PERMANENTLY EXPOSED TO EARTH	3"
CONCRETE EXPOSED TO EARTH OR WEATHER	
#6 THROUGH #18 BAR	2"
#5 BAR AND SMALLER	1 1/2"
CONCRETE NOT EXPOSED TO EARTH OR WEATHER OR IN CONTACT WITH GROUND	
SLABS, WALLS, JOISTS	3/4"
BEAMS, COLUMNS (INCLUDING TIES)	1 1/2"
SLAB ON GRADE	SEE DETAILS

F. NON-SHRINK GROUT FOR BASE PLATES AND BEARING PLATES

1. GROUT FOR BASE PLATES AND BEARING PLATES SHALL BE A NON-METALLIC, SHRINKAGE RESISTANT, PREMIXED, NON-CORROSIVE, NON-STAINING PRODUCT CONTAINING PORTLAND CEMENT, SILICA SANDS, SHRINKAGE COMPENSATING AGENTS, AND FLUIDITY IMPROVING COMPOUNDS.
2. GROUT SHALL CONFORM TO CORPS OF ENGINEERS SPECIFICATION FOR NON-SHRINK GROUT, CE-CRD-C621. TWENTY-EIGHT DAY COMPRESSIVE STRENGTH AS DETERMINED BY GROUT CUBE TESTS, SHALL BE 5,000 PSI. MINIMUM THICKNESS OF GROUT UNDER ALL BASE PLATES AND BEARING PLATES SHALL BE 1 INCH, UNLESS SPECIFIED OTHERWISE ON THE DRAWINGS.
3. GROUT SHALL BE PLACED IN A FLUID FLOWABLE STATE UNDER BASE PLATES THAT HAVE A FORM BUILT AROUND THEM FOR GROUT CONFINEMENT. GROUT SHOULD BE CURED ACCORDING TO MANUFACTURER'S RECOMMENDATIONS.

G. STRUCTURAL STEEL

1. ALL ASPECTS OF WORK RELATING TO THE DESIGN, FABRICATION, DETAILING, AND ERECTION OF STRUCTURAL STEEL SHALL CONFORM TO THE FOLLOWING CODES AND SPECIFICATIONS:

   FOURTEENTH EDITION OF THE AISC STEEL CONSTRUCTION MANUAL LATEST EDITION OF THE ANSI/AWS D1.1

2. STRUCTURAL STEEL MATERIALS SHALL COMPLY WITH THE FOLLOWING SPECIFICATIONS:

WIDE FLANGE	ASTM A992
ANGLES, PLATES, BARS, CHANNELS	ASTM A36 U.N.O.
PIPES	ASTM A53 GR B
HSS (RECTANGULAR OR SQUARE)	ASTM A500 GR B (Fy = 46 KSI) OR GR C (Fy = 50 KSI)
HSS (ROUND)	ASTM A500 GR B (Fy = 42 KSI) OR GR C (Fy = 46 KSI)
ANCHOR RODS	ASTM F1554-36 U.N.O
HIGH STRENGTH BOLTS	ASTM F3125 GR A325 OR GR F1852 U.N.O.
HEADED STUD ANCHORS (HSA)	ASTM A108
DEFORMED BAR ANCHORS (DBA)	ASTM A496

3. THE DESIGN OF ALL STEEL CONNECTIONS SHALL BE PERFORMED UNDER THE DIRECT SUPERVISION OF A REGISTERED PROFESSIONAL ENGINEER IN THE STATE WHERE THE PROJECT IS LOCATED, EMPLOYED BY THE FABRICATOR. CALCULATIONS SEALED BY THE FABRICATOR'S PROFESSIONAL ENGINEER MUST BE SUBMITTED IF REQUESTED.
4. STRUCTURAL STEEL NOT EXPOSED TO WEATHER SHALL BE LEFT UNPAINTED UNLESS NOTED OTHERWISE IN THE ARCHITECTURAL DRAWINGS AND/OR SPECIFICATIONS.
5. IT IS THE INTENTION OF THE PLANS AND SPECIFICATIONS THAT SHOP CONNECTIONS BE WELDED OR BOLTED AND THAT FIELD CONNECTIONS BE BOLTED, UNLESS DETAILED OTHERWISE ON THE DRAWINGS.
6. ALL TYPICAL BEAM SIMPLE CONNECTIONS SHALL BE STANDARD DOUBLE ANGLE OR SINGLE ANGLE FRAMED BEAM CONNECTIONS UNLESS NOTED OTHERWISE, SHEAR TAB CONNECTIONS MAY BE USED AT LOCATIONS WHERE DOUBLE ANGLE CONNECTIONS ARE NOT POSSIBLE. SEATED BEAM CONNECTIONS SHALL NOT BE USED UNLESS INDICATED ON THE DRAWINGS. PROVIDE FULL DEPTH SHEAR TAB IF BEAM FRAMES ON ONLY ONE SIDE OF A GIRDER.
7. DESIGN CONNECTIONS OF NON-COMPOSITE BEAMS TO SUPPORT A REACTION R (UNLESS SPECIFIED OTHERWISE) EQUAL TO ONE HALF THE TOTAL UNIFORM LOAD CAPACITY FROM THE TABLE OF UNIFORM LOAD CONSTANTS IN THE AISC MANUAL.
8. BEAM CONNECTIONS FOR COMPOSITE BEAMS SHALL BE DESIGNED FOR REACTIONS LISTED IN THE TABLE BELOW. ALL VALUES LISTED IN THE TABLE ARE LOAD RESISTANCE FACTOR DESIGN (LRFD).

BEAM SIZE	REACTION	BEAM SIZE	REACTION
W8	30 KIPS	W21	120 KIPS
W10	30 KIPS	W24	140 KIPS
W12	40 KIPS	W27	160 KIPS
W14	50 KIPS	W30	180 KIPS
W16	80 KIPS	W33	200 KIPS
W18	100 KIPS	W36	220 KIPS

9. ADD TO THE REACTION LISTED ABOVE, ANY LOADS OR REACTIONS OF MEMBERS SUPPORTED BY THE BEAM WITHIN THREE FEET OF BEAM END AND THE VERTICAL COMPONENTS OF FORCES IN BRACE MEMBERS FRAMING INTO THE BEAMS.
10. BRACING CONNECTIONS SHALL DEVELOP FULL TENSILE FORCES AT EACH END OF THE BRACING MEMBER UNLESS BRACING FORCES ARE SPECIFIED ON THE DRAWINGS.
11. ALL WELDING SHALL COMPLY TO THE AMERICAN WELDING SOCIETY STANDARD (AWS D1.1). ALL WELDED JOINTS SHALL BE DETAILED AS INDICATED BY THE PREQUALIFIED JOINT DETAILS IN THE STRUCTURAL WELDING CODE. WELD LENGTHS CALLED FOR ON THE PLANS ARE THE NET EFFECTIVE LENGTH REQUIRED. WELD SIZE SHALL BE AISC MINIMUM UNLESS A LARGER SIZE IS NOTED. ALL WELDS SHALL USE MINIMUM E70XX ELECTRODES.
12. ALL WELDING SHALL BE PERFORMED BY A WELDER CERTIFIED IN ACCORDANCE WITH THE AWS STANDARDS.
13. MISCELLANEOUS STEEL CONNECTIONS SHALL BE WELDED ALL AROUND WITH AISC MINIMUM FILLET WELD UNLESS A LARGER WELD IS SPECIFIED. STEEL MEMBERS CONTINUOUSLY ATTACHED SHALL BE STITCH WELDED TOGETHER WITH AISC MINIMUM 2" LONG FILLET WELD AT 12" O.C. UNLESS A LARGER WELD OR DIFFERENT GAGE IS SPECIFIED.
14. ALL BOLTS SHALL BE DESIGNED AS BEARING BOLTS WITH THREADS INCLUDED IN THE SHEAR PLANE. ALL BOLTS SHALL BE NEW AND NOT RE-USED. BOLT HOLES IN STEEL SHALL BE 1/16 INCH LARGER THAN NOMINAL SIZE OF BOLT USED, EXCEPT ANCHOR ROD HOLES. MINIMUM BOLT DIAMETER SHALL BE 3/4 INCH. ALL BOLTS SHALL BE TIGHTENED TO A SNUG-TIGHT POSITION, EXCEPT AT BRACES, MOMENT CONNECTIONS AND CONNECTIONS MARKED AS SLIP CRITICAL (SC) SHALL BE TIGHTENED USING LOAD INDICATING WASHERS OR TENSION BOLTS.
15. SHEAR STUDS AND THEIR INSTALLATION SHALL MEET ALL REQUIREMENTS OF AWS D1.1. STUD DIAMETER AND LENGTH SHALL BE 3/4 INCH DIAMETER X 4-3/16 INCH LONG BEFORE WELDING. STUDS SHALL BE WELDED IN THE FIELD (NOT THE SHOP) USING AUTOMATICALLY TIMED STUD WELDING EQUIPMENT. THE TOP FLANGE OF THE BEAM MUST BE UNPAINTED AND FREE OF HEAVY RUST, MILL SCALE AND OTHER FOREIGN MATERIALS.
16. ALL STEEL EXPOSED TO WEATHER OR OUTSIDE THE BUILDING'S WATERPROOFING, SUCH AS BRICK SHELF ANGLES, SHALL BE HOT-DIPPED GALVANIZED AFTER FABRICATION AS SPECIFIED BY THE STEEL STRUCTURES PAINTING COUNCIL (SSPC). THE ZINC COATING FOR STEEL SHAPES AND PLATES SHALL AVERAGE NOT LESS THAN 2.3 OZ. WITH NO INDIVIDUAL THICKNESS LESS THAN 2.0 OZ.
17. GALVANIZE ALL NUTS, BOLTS, AND WASHERS USED IN THE CONNECTION OF GALVANIZED STEEL.
18. GALVANIZED MEMBERS SHALL HAVE "Z.R.C. COLD GALVANIZING COMPOUND OR APPROVED EQUIVALENT APPLIED TO FIELD WELDED CONNECTIONS. SURFACE AREAS TO RECEIVE COLD GALVANIZING COMPOUND SHALL BE CLEAN OF DIRT AND DEBRIS PRIOR TO COMPOUND APPLICATION. SEE MANUFACTURER'S LITERATURE FOR ADDITIONAL RECOMMENDATIONS.
19. THE APPLICATION OF THE FIREPROOFING TO THE STEEL MEMBERS AND STEEL DECK IS THE RESPONSIBILITY OF THE CONTRACTOR. THE CONTRACTOR MUST ENFORCE THE REQUIREMENTS OF THE MANUFACTURER AND NOT IMPOSE ADDITIONAL LOADS, INCLUDING CONSTRUCTION LIVE LOADS, DURING THE APPLICATION AND CURING OF THE FIREPROOFING.
20. IN ADDITION TO ALL OF THE STEEL INDICATED ON THE DRAWINGS, THE CONTRACTOR SHALL PROVIDE FOR AN ALLOWANCE OF A NET 2 1/2 TONS OF STEEL TO BE FURNISHED, FABRICATED, DETAILED, AND ERECTED DURING THE PROGRESSION OF WORK AS MAY BE DIRECTED BY THE ENGINEER OF RECORD.
21. THE CONTRACTOR SHALL MAKE AN ALLOWANCE FOR THE ADJUSTMENT AND DETAILING OF STEEL DURING THE SHOP DRAWING REVIEW PROCESS.
22. MISCELLANEOUS STEEL FOR THE ATTACHMENT AND SUPPORT OF CAST STONE HAS BEEN INCLUDED ON THE STRUCTURAL PLANS TO PRESENT A POSSIBLE ATTACHMENT CONFIGURATION. THE STEEL SHOWN REPRESENTS ONLY ONE METHOD FOR SUCH SUPPORT. THE CAST STONE SUPPLIER/INSTALLER SHALL REVIEW THE CONSTRUCTION DOCUMENTS PRIOR TO BID AND DETERMINE THE ADEQUACY OF THE MISCELLANEOUS STEEL SHOWN AND THEIR PREFERRED METHOD OF ATTACHMENT. ANY CHANGES NECESSARY TO THE STRUCTURAL DRAWINGS AS A RESULT OF THAT REVIEW SHALL BE SUBMITTED TO THE ARCHITECT FOR APPROVAL AND BE INCLUDED IN THE CONTRACTOR'S BID. THE CONTRACTOR SHALL INCLUDE HIS/HER BID ON ALL NECESSARY MISCELLANEOUS STEEL REQUIRED TO SUPPORT THE CAST STONE.

1

H. OPEN WEB STEEL JOISTS AND JOIST GIRDERS

1. OPEN WEB STEEL JOISTS AND JOIST GIRDERS SHALL BE DESIGNED, MANUFACTURED, AND ERECTED PER THE CURRENT APPLICABLE ISSUE OF THE STANDARD SPECIFICATIONS FOR STEEL JOISTS (K SERIES), LONGSPAN STEEL JOISTS (LH SERIES), OR DEEP LONGSPAN JOISTS (DLH SERIES), OR SUPER LONGSPAN STEEL INSTITUTE AND AISC.
2. JOISTS AND JOIST GIRDERS SHALL BE CAMBERED FOR REALISTIC DEAD LOAD. PROVIDE STANDARD SJI CAMBER UNLESS SPECIFIED OTHERWISE ON THE DRAWINGS.
3. TOP CHORD OF JOISTS SHALL BE DOUBLE ANGLES OR TEES. PROVIDE TOP CHORD EXTENSIONS WHERE SHOWN ON THE DRAWINGS. JOISTS AND JOIST GIRDERS WITH BOTTOM CHORD EXTENSIONS SHALL NOT HAVE END CONNECTIONS MADE TO COLUMN STABILIZER PLATE.
4. PROVIDE FLAT BEARING FOR ALL JOISTS AND JOIST GIRDERS. PROVIDE SJI STANDARD DEPTH OF BEARING FOR ALL JOISTS AND JOIST GIRDERS. IF SUFFICIENT BEARING DOES NOT EXIST, STAGGER THE END OF EACH JOIST AND CENTER OF BEARING OVER THE CENTER OF SUPPORT. WHERE K SERIES JOISTS BEAR ON THE SAME BEAM AS LH AND DLH JOISTS, THE K SERIES JOIST SEATS SHALL MATCH THE DEPTH OF THE LH OR DLH JOIST SEATS.
5. COORDINATION OF ALL JOIST SEAT DEPTHS WITH STRUCTURAL STEEL ELEVATIONS SHALL BE THE RESPONSIBILITY OF THE CONTRACTOR AND STEEL FABRICATOR.
6. JOISTS AND JOIST GIRDERS SHALL BE SHOP PAINTED PER ARCHITECTURAL SPECIFICATIONS.
7. ALL JOISTS SHALL CARRY THE DESIGN LOADS AS SPECIFIED IN THE SJI LOAD TABLES AS THE MINIMUM REQUIREMENT. ADDITIONALLY, THE JOISTS SHALL BE DESIGNED TO CARRY ANY OTHER LOAD TYPES AND PATTERNS INDICATED ON THE STRUCTURAL DRAWINGS. REFER TO THE STRUCTURAL DRAWINGS FOR ANY OTHER LOADS REQUIRED TO BE CARRIED BY ANY JOIST.
8. STEEL JOIST MANUFACTURER SHALL SUBMIT SHOP DRAWINGS AND CALCULATIONS SEALED BY AN ENGINEER LICENSED IN THE STATE OF TEXAS. JOIST DESIGNS AND DRAWINGS SHALL INCLUDE BRIDGING AND OTHER MISCELLANEOUS ITEMS AS REQUIRED.
9. WHERE UPLIFT FORCES ARE A DESIGN CONSIDERATION, ROOF JOISTS SHALL BE ANCHORED TO RESIST SUCH FORCES. ROOF JOISTS SHALL BE DESIGNED FOR A NET UPLIFT PRESSURE SHOWN ON S103.

PROFESSIONAL SEAL
Matrix Structural Engineers
TBPE Firm Registration No. F-2640
STATE OF TEXAS
JAYNOOL A. KHAYRATTEE
66260
LICENSED PROFESSIONAL ENGINEER
01/30/2020

LOGO/CONTACT
MATRIX STRUCTURAL ENGINEERS
5177 Richmond Avenue, Suite 670
Houston, TX 77056-2401
Tel: 713.664.0130
Fax: 713.664.1370
MSE - 18135

DESIGN TEAM

Architectural
Martinez Architects

Civil Engineer
Maverick Engineering

Structural
Matrix Structural engineers

MEP
DBR

Landscaping
KDC Associates

FIRE STATION #11

CITY OF MIDLAND

Briarwood Ave & Golden Gate Dr
Midland, TX 79707

PROJECT No: MA 18017
DATE: 01/30/2020

No.	Date	Description
	05/21/19	100% DD
	07/30/19	ISSUE FOR PERMIT
	01/30/20	100% ISSUE FOR BIDDING
1	02/19/20	ADDENDUM 2

GENERAL NOTES

S101

SPREAD FOOTING SCHEDULE

Mark	Length	Width	Thickness	Reinforcement Bottom (Short way)	Reinforcement Bottom (Long way)	Reinforcement Top (Short way)*	Reinforcement Top (Long way)*
F3	3' - 0"	3' - 0"	1' - 6"	(4)-#5	(4)-#5	(3)-#5	(3)-#5
F4	4' - 0"	4' - 0"	1' - 6"	(5)-#5	(5)-#5	(4)-#5	(4)-#5
F5	5' - 0"	5' - 0"	1' - 6"	(7)-#5	(7)-#5	(5)-#5	(5)-#5
F6	6' - 0"	6' - 0"	1' - 6"	(8)-#6	(8)-#6	(6)-#5	(6)-#5
F11X6	11' - 0"	6' - 0"	1' - 6"	(11)-#6	(6)-#7	(6)-#5	(6)-#5

* PROVIDE TOP BARS AT BRACE AND MOMENT FRAME COLUMNS ONLY.

FOUNDATION PLAN NOTES:

1. ALL SPREAD FOOTINGS ARE CENTERED UNDER COLUMN CENTERLINES, U.N.O.
2. SPREAD FOOTINGS OCCURRING AT INTERMEDIATE LOCATIONS SHALL BE CENTERED AT GRADE BEAM CENTERLINE.
3. SEE ARCHITECTURAL DRAWINGS FOR EXACT LOCATION OF ALL FLOOR SLOPES, DEPRESSIONS, ETC.
4. COORDINATE ALL BRICK LEDGES AND DEPTH WITH ARCHITECTURAL DRAWINGS.
5. LOCATIONS NOTED THUS: 0' - 0" INDICATES TOP OF SLAB ELEVATION. VERIFY WITH CIVIL FOR CORRESPONDING CIVIL ELEVATION.
6. SEE DETAILS 6, 9, & 11/S305 FOR BASE PLATES.
7. SEE 8/S301 & 7/S301 FOR ADDITIONAL REBAR AT OPENINGS AND RE-ENTRANT CORNERS IN SLAB-ON-GRADE.
8. PROVIDE CONTRACTION JOINTS AND DISCONTINUOUS SLAB REINFORCING AS SHOWN IN DETAIL 5/S301 & 4/S301.
9. FIELD VERIFY ALL EXISTING CONDITIONS AND DIMENSIONS PRIOR TO FABRICATION / CONSTRUCTION.
10. T.D. INDICATES TURNDOWN, SEE 3/S305.

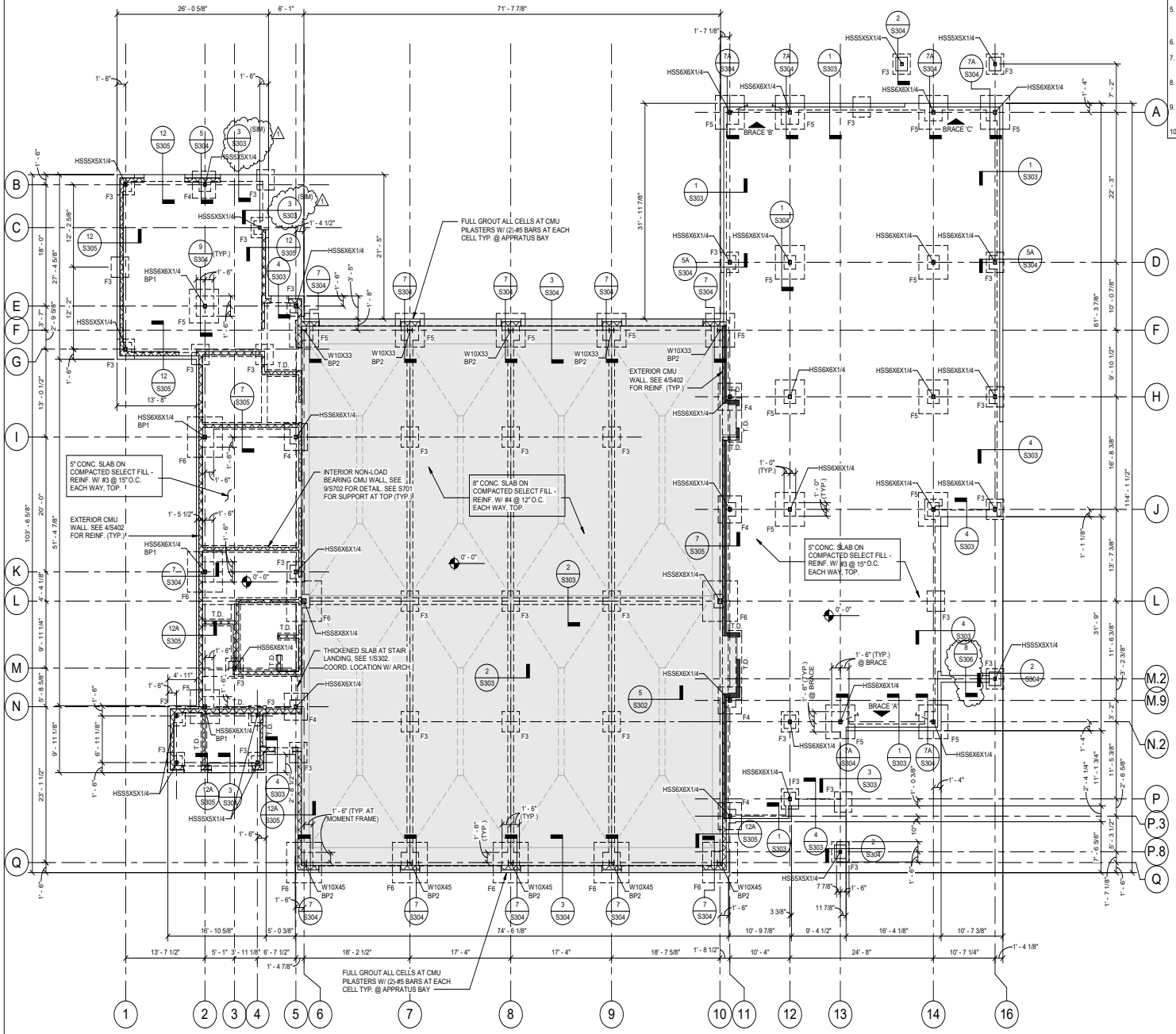

1 FOUNDATION PLAN - FIRE STATION
SCALE: 1/8" = 1'-0"

TRUE NORTH PROJECT NORTH

PROFESSIONAL SEAL
Matrix Structural Engineers
TBPE Firm Registration No. F-2640
JAYNOOL A. KHAYRATTEE
68260
01/30/2020

LOGO/CONTACT
MATRIX STRUCTURAL ENGINEERS
5177 Richmond Avenue, Suite 670
Houston, TX 77046-2401
Tel: 713.664.0133
Fax: 713.664.1370
MSE - 18135

DESIGN TEAM

Architectural
Martinez Architects

Civil Engineer
Maverick Engineering

Structural
Matrix Structural engineers

MEP
DBR

Landscaping
KDC Associates

FIRE STATION #11
CITY OF MIDLAND
Briarwood Ave & Golden Gate Dr
Midland, TX 79707

PROJECT No: MA 18017
DATE: 01/30/2020

No.	Date	Description
	05/21/19	100% DD
	07/30/19	ISSUE FOR PERMIT
	01/30/20	100% ISSUE FOR BIDDING
1	02/19/20	ADDENDUM 2

FOUNDATION PLAN - FIRE STATION

S201

4.1613

SPREAD FOOTING SCHEDULE

Mark	Length	Width	Thickness	Reinforcement Bottom (Short way)	Reinforcement Bottom (Long way)	Reinforcement Top (Short way)*	Reinforcement Top (Long way)*
F3	3' - 0"	3' - 0"	1' - 6"	(4)-#5	(4)-#5	(3)-#5	(3)-#5
F4	4' - 0"	4' - 0"	1' - 6"	(5)-#5	(5)-#5	(4)-#5	(4)-#5
F5	5' - 0"	5' - 0"	1' - 6"	(7)-#5	(7)-#5	(5)-#5	(5)-#5
F6	6' - 0"	6' - 0"	1' - 6"	(8)-#6	(8)-#6	(6)-#5	(6)-#5
F11X6	11' - 0"	6' - 0"	1' - 6"	(11)-#6	(6)-#7	(6)-#5	(6)-#5

* PROVIDE TOP BARS AT BRACE AND MOMENT FRAME COLUMNS ONLY

FOUNDATION PLAN NOTES:

1. ALL SPREAD FOOTINGS ARE CENTERED UNDER COLUMN CENTERLINES, U.N.O.
2. SPREAD FOOTINGS OCCURRING AT INTERMEDIATE LOCATIONS SHALL BE CENTERED AT GRADE BEAM CENTERLINE.
3. SEE ARCHITECTURAL DRAWINGS FOR EXACT LOCATION OF ALL FLOOR SLOPES, DEPRESSIONS, ETC.
4. COORDINATE ALL BRICK LEDGES AND DEPTH WITH ARCHITECTURAL DRAWINGS.
5. LOCATIONS NOTED THUS: 0' - 0" INDICATES TOP OF SLAB ELEVATION. VERIFY WITH CIVIL FOR CORRESPONDING CIVIL ELEVATION.
6. SEE DETAILS 6, 9, & 11/S305 FOR BASE PLATES.
7. SEE 8/S301 & 7/S301 FOR ADDITIONAL REBAR AT OPENINGS AND RE-ENTRANT CORNERS IN SLAB-ON-GRADE.
8. PROVIDE CONTRACTION JOINTS AND DISCONTINUOUS SLAB REINFORCING AS SHOWN IN DETAIL 5/S301 & 4/S301.
9. FIELD VERIFY ALL EXISTING CONDITIONS AND DIMENSIONS PRIOR TO FABRICATION / CONSTRUCTION.
10. T.D. INDICATES TURNDOWN, SEE 3/S305.

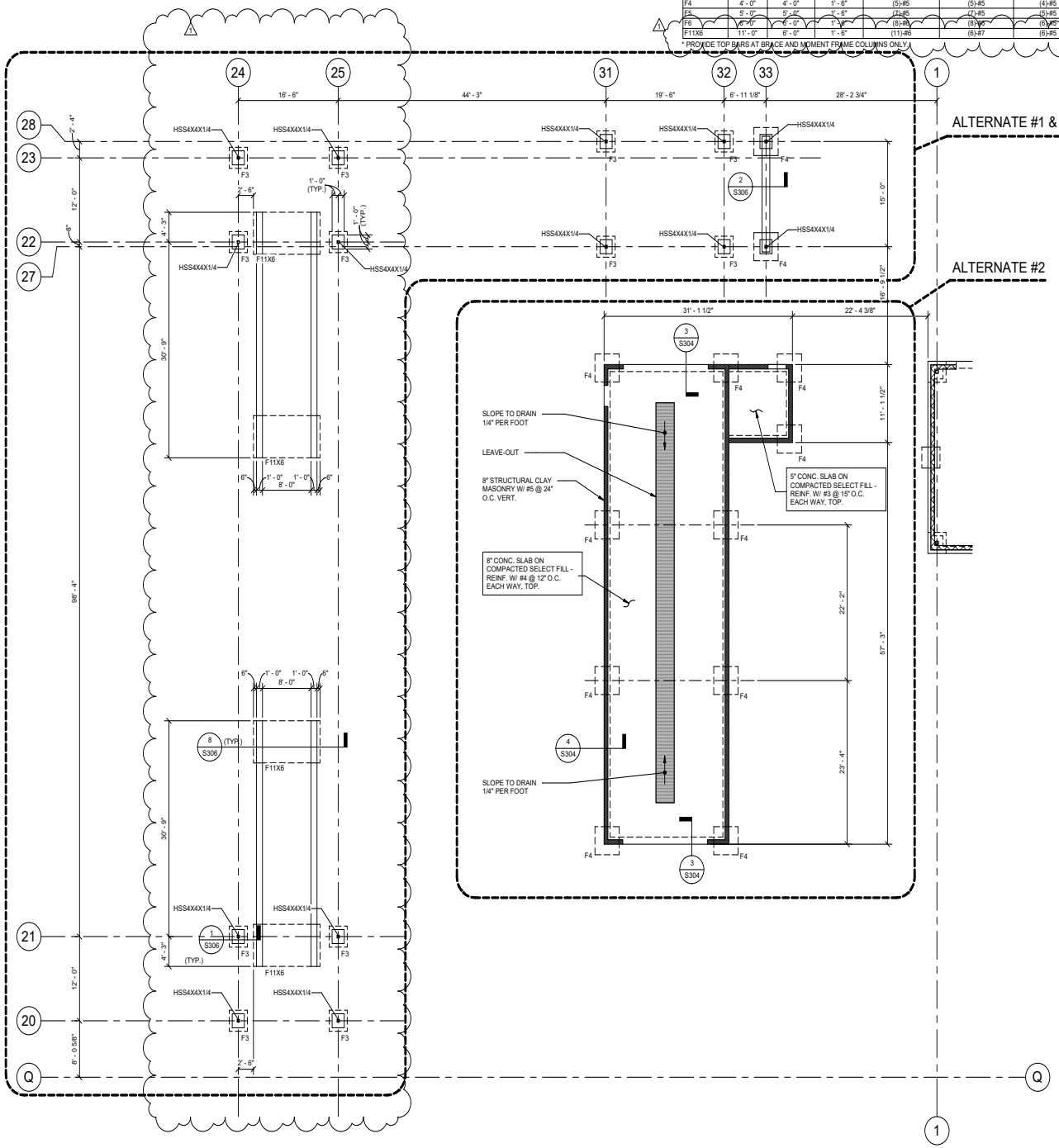

1 FOUNDATION PLAN - SUPPORT COMPONENTS
SCALE: 1/8" = 1'-0"

TRUE NORTH
PROJECT NORTH

PROFESSIONAL SEAL
Matrix Structural Engineers
TBPE Firm Registration No. F-2640
STATE OF TEXAS
JAYNOOL A. KHAYRATTEE
85260
LICENSED PROFESSIONAL ENGINEER
01/30/2020

LOGO/CONTACT
MATRIX STRUCTURAL ENGINEERS
5177 Richmond Avenue, Suite 670
Houston, TX 77046-2401
Tel: 713.664.0133
Fax: 713.664.1370
MSE - 18135

DESIGN TEAM

Architectural
Martinez Architects

Civil Engineer
Maverick Engineering

Structural
Matrix Structural engineers

MEP
DBR

Landscaping
KDC Associates

FIRE STATION #11
CITY OF MIDLAND
Briarwood Ave & Golden Gate Dr
Midland, TX 79707

PROJECT No: MA 18017
DATE: 01/30/2020

No.	Date	Description
	05/21/19	100% DD
	07/30/19	ISSUE FOR PERMIT
	01/30/20	100% ISSUE FOR BIDDING
1	02/19/20	ADDENDUM 2

FOUNDATION PLAN - SUPPORT COMPONENTS

S202

4.1614

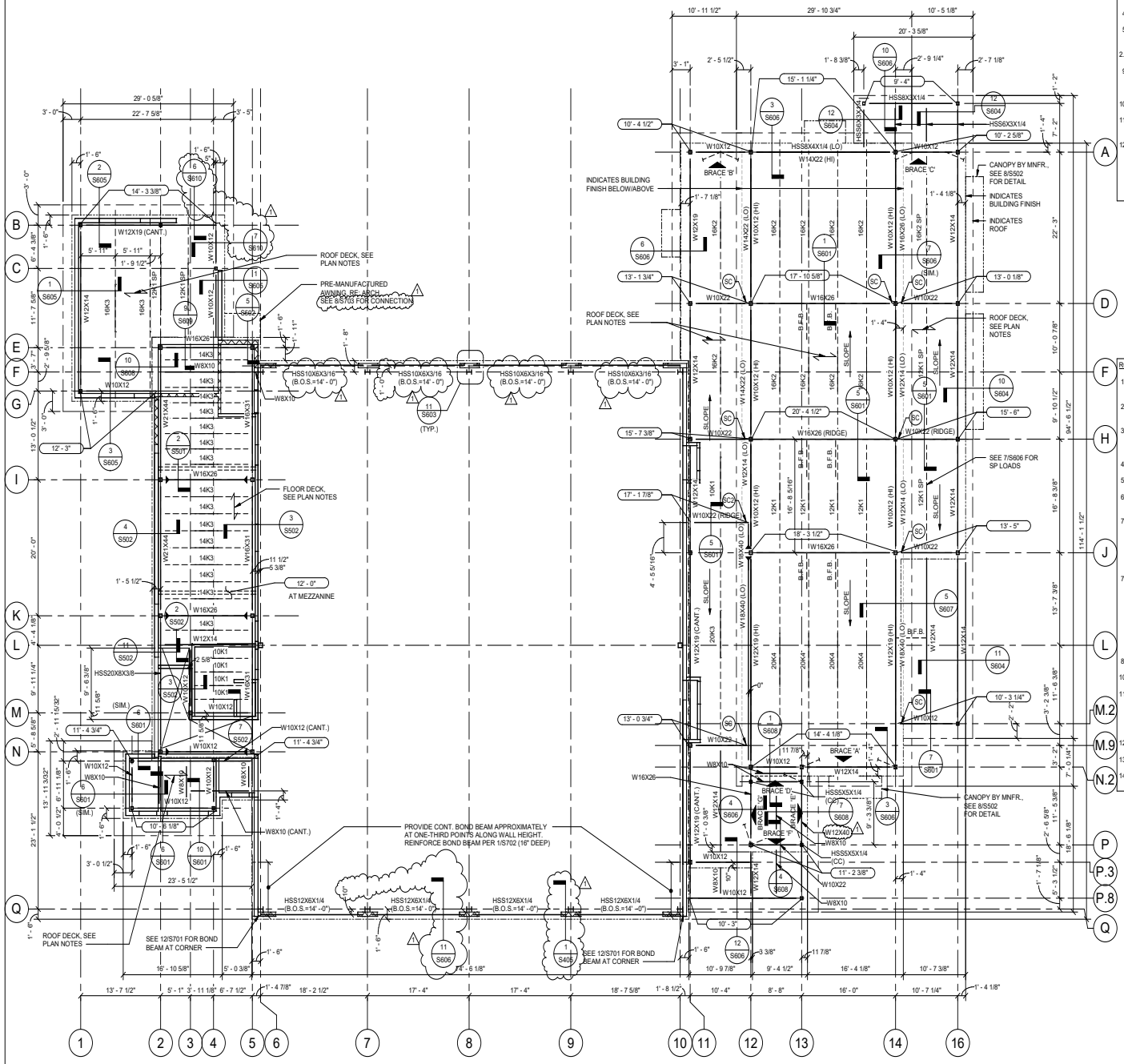

1 MEZZANINE & LOW ROOF FRAMING PLANS - FIRE STATION

SCALE: 1/8" = 1'-0"

TRUE NORTH

PROJECT NORTH

FLOOR PLAN NOTES:

1. TOP OF CONCRETE ELEVATION = 12' - 0"
2. LOCATIONS SHOWN THUS: (12) C=3/4" INDICATES NUMBER OF SHEAR CONNECTORS AS 12 AND UPWARD CAMBER AT MID SPAN OF BEAM AS 3/4"
3. SPACE JOISTS EQUALLY U.N.O.
4. PROVIDE END PLATES AT ALL TUBE BEAMS.
5. FIELD VERIFY ALL EXISTING CONDITIONS AND DIMENSIONS PRIOR TO FABRICATION / CONSTRUCTION.
2. SEE SHEET S201 FOR ALL COLUMN SIZES NOT SHOWN.
9. = MOMENT CONNECTION
   LSH = LONG SIDE HORIZONTAL
   LSV = LONG SIDE VERTICAL
10. CC: INDICATES CARRIED COLUMN, SEE DETAIL 7/S401.
11. ALL LOWER TUBE BEAM ELEVATIONS TO BE VERIFIED WITH ARCHITECT DRAWINGS.
12. FLOOR SHALL BE 2 1/2" NORMAL WEIGHT CONCRETE OVER THE FLUTES OF 1.0C TYPE 22 GA. STEEL DECK AS MANUFACTURED BY VULCRAFT OR APPROVED EQUIVALENT TO TOTAL THICKNESS = 3 1/2". REINFORCE CONCRETE WITH 6x6-W2.9xW2.9 WWF. WELD DECK USING 5/8"Ø NET EFFECTIVE PUDDLE WELDS:
   a. PERPENDICULAR BEARING : 33/4 PATTERN.
   b. PARALLEL BEARING AND EDGE : AT 11" O.C.
   c. SIDE SEAMS : SEAM WELDS AT 11" O.C.

ROOF FRAMING PLAN NOTES:

1. LOCATIONS SHOWN THUS: ( ) INDICATES TOP OF STEEL (T.O.S.) ELEVATION (TOP OF STEEL = TOP OF JOIST OR BOTTOM OF DECK).
2. FIELD VERIFY ALL EXISTING CONDITIONS AND DIMENSIONS PRIOR TO FABRICATION / CONSTRUCTION.
3. JOISTS SHALL BE DESIGNED FOR ADDITIONAL LOADS RESULTING FROM RTU'S AND OTHER MECHANICAL EQUIPMENT ON THE ROOF OR SUSPENDED FROM THE ROOF STRUCTURE. SEE ARCHITECTURAL AND MEP DRAWINGS FOR LOCATIONS.
4. SPACE JOISTS EQUALLY, U.N.O.
5. PROVIDE 3/16" CLOSURE PLATES AT ALL TUBE BEAMS.
6. REFER TO ARCHITECTURAL DRAWINGS / MEP FOR LOCATIONS OF ROOF DRAINS, OVERFLOW DRAINS AND TAPERED INSULATION.
7a. ROOF SHALL BE 1.5B, 22GA DECK AS MANUFACTURED BY VULCRAFT OR EQUIVALENT. SEE ARCHITECTURAL DRAWINGS FOR INSULATION, ROOFING, ETC. WELD DECK USING 5/8"Ø NET EFFECTIVE PUDDLE WELDS:
   a. PERPENDICULAR BEARING: 36/7 PATTERN.
   b. PARALLEL BEARINGS AND EDGE: AT 6"O.C.
   c. SIDE SEAMS: #10 TEK SCREWS AT 12"O.C.
7b. IN LIEU OF THE DECK ATTACHMENT SHOWN ABOVE, ALTERNATE DECK ATTACHMENT SHALL BE AS FOLLOWS:
   a. REPLACE EACH 5/8"Ø WELD WITH ONE HILTI X-HSN 24 FASTENER FOR BASE STEEL FLANGE THICKNESS (tf) ≤ 3/8" AT THICKER BASE STEEL USE ONE HILTI X-ENP-19-L15 TYPE FASTENER.
   b. REPLACE EACH SIDE SEAM #10 SCREW WITH ONE HILTI S-SLC 01 M HWH FASTENER FOR DECK THICKNESS LESS THAN OR EQUAL TO 20 GAGE.
   c. ATTACHMENTS SHALL BE INSTALLED IN STRICT ACCORDANCE WITH MANUFACTURER SPECIFICATIONS.
8. SEE SHEET S801 FOR BRACE ELEVATIONS.
10. SEE SHEET S201 FOR ALL COLUMN SIZES NOT SHOWN.
11. = MOMENT CONNECTION
    LSH = LONG SIDE HORIZONTAL
    LSV = LONG SIDE VERTICAL
    HI = HIGH
    LO = LOW
12. CC : INDICATES CARRIED COLUMN, SEE DETAIL 7/S401.
13. B.F.B. INDICATES BOTTOM FLANGE BRACE, SEE 1/S602 FOR DETAIL.
14. (SC) INDICATES SLIP CRITICAL CONNECTION, SEE 12/S402 FOR DETAIL.

PROFESSIONAL SEAL

Matrix Structural Engineers
TBPE Firm Registration No. F-2640

STATE OF TEXAS — JAYNOOL A. KHAYRATTEE — 68260 — REGISTERED PROFESSIONAL ENGINEER

01/30/2020

LOGO/CONTACT

MATRIX STRUCTURAL ENGINEERS

5177 Richmond Avenue, Suite 670
Houston, TX 77056-2401
Tel: 713.664.0133
Fax: 713.664.1370
MSE - 18135

DESIGN TEAM

Architectural
Martinez Architects

Civil Engineer
Maverick Engineering

Structural
Matrix Structural engineers

MEP
DBR

Landscaping
KDC Associates

FIRE STATION #11

CITY OF MIDLAND

Briarwood Ave & Golden Gate Dr
Midland, TX 79707

PROJECT No: **MA 18017**
DATE: **01/30/2020**

No.	Date	Description
	05/21/19	100% DD
	07/30/19	ISSUE FOR PERMIT
	01/30/20	100% ISSUE FOR BIDDING
1	02/19/20	ADDENDUM 2

MEZZANINE FRAMING & LOW ROOF FRAMING PLANS

S211

4.1615

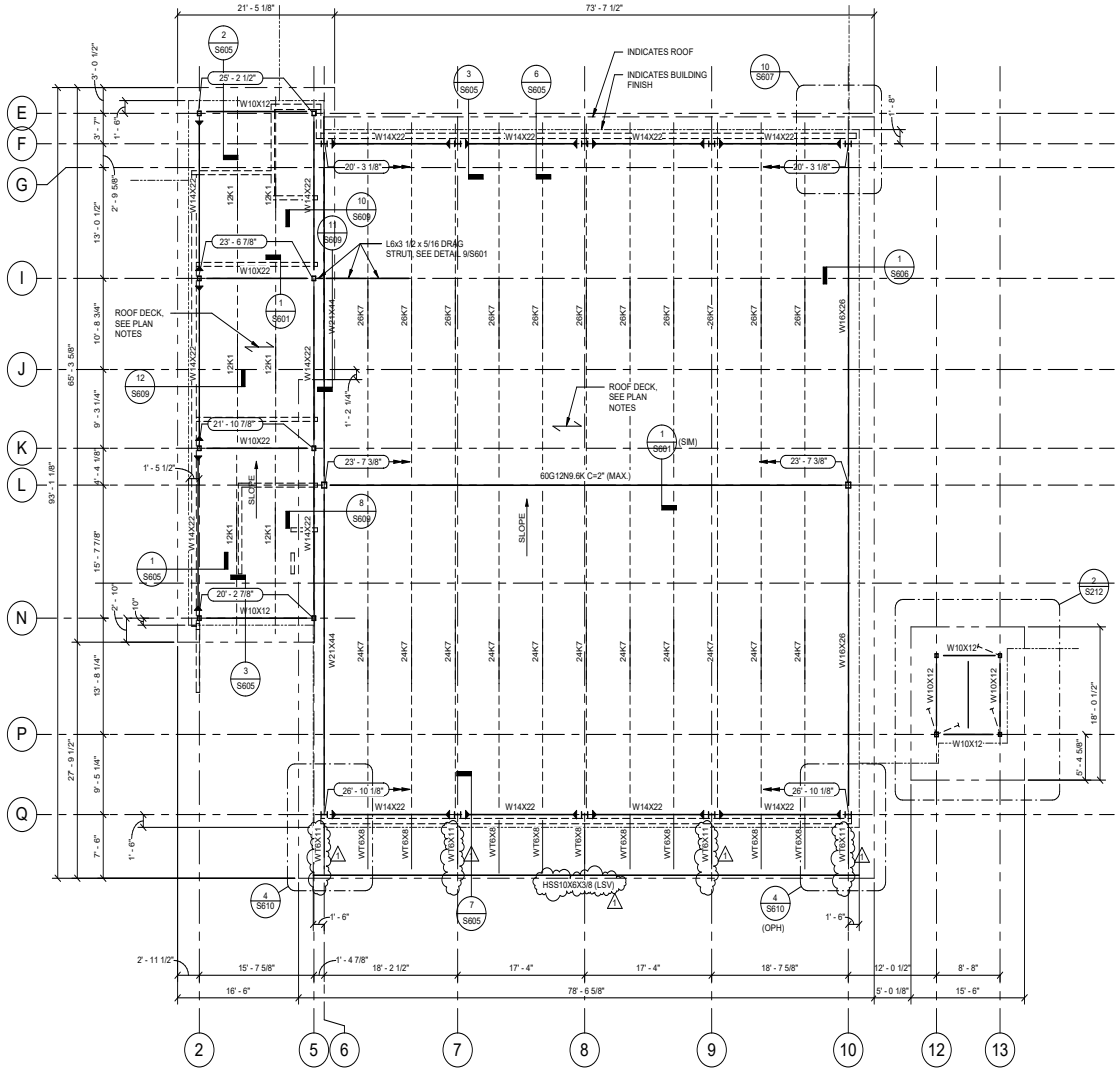

1 HIGH ROOF FRAMING PLAN - FIRE STATION
SCALE: 1/8" = 1'-0"

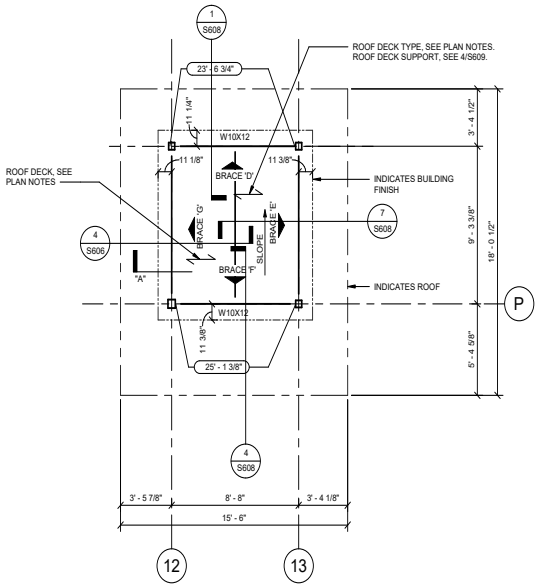

PARTIAL ENLARGED
2 HIGH ROOF FRAMING PLAN - FIRE STATION
SCALE: 1/4" = 1'-0"

ROOF FRAMING PLAN NOTES:

1. LOCATIONS SHOWN THUS: ( ) INDICATES TOP OF STEEL (T.O.S.) ELEVATION (TOP OF STEEL = TOP OF JOIST OR BOTTOM OF DECK).
2. FIELD VERIFY ALL EXISTING CONDITIONS AND DIMENSIONS PRIOR TO FABRICATION / CONSTRUCTION.
3. JOISTS SHALL BE DESIGNED FOR ADDITIONAL LOADS RESULTING FROM RTU'S AND OTHER MECHANICAL EQUIPMENT ON THE ROOF OR SUSPENDED FROM THE ROOF STRUCTURE. SEE ARCHITECTURAL AND MEP DRAWINGS FOR LOCATIONS.
4. SPACE JOISTS EQUALLY, U.N.O.
5. PROVIDE 3/16" CLOSURE PLATES AT ALL TUBE BEAMS.
6. REFER TO ARCHITECTURAL DRAWINGS / MEP FOR LOCATIONS OF ROOF DRAINS, OVERFLOW DRAINS AND TAPERED INSULATION.

7a. ROOF SHALL BE 1.5B, 22GA DECK AS MANUFACTURED BY VULCRAFT OR EQUIVALENT. SEE ARCHITECTURAL DRAWINGS FOR INSULATION, ROOFING, ETC. WELD DECK USING 5/8"Ø NET EFFECTIVE PUDDLE WELDS:
a. PERPENDICULAR BEARING: 36/7 PATTERN.
b. PARALLEL BEARINGS AND EDGE: AT 6"O.C.
c. SIDE SEAMS: #10 TEK SCREWS AT 12"O.C.

7b. IN LIEU OF THE DECK ATTACHMENT SHOWN ABOVE, ALTERNATE DECK ATTACHMENT SHALL BE AS FOLLOWS:
a. REPLACE EACH 5/8"Ø WELD WITH ONE HILTI X-HSN 24 FASTENER FOR BASE STEEL FLANGE THICKNESS (tf) ≤ 3/8" AT THICKER BASE STEEL USE ONE HILTI X-ENP-19-L15 TYPE FASTENER.
b. REPLACE EACH SIDE SEAM #10 SCREW WITH ONE HILTI S-SLC 01 M HWH FASTENER FOR DECK THICKNESS LESS THAN OR EQUAL TO 20 GAGE.
c. ATTACHMENTS SHALL BE INSTALLED IN STRICT ACCORDANCE WITH MANUFACTURER SPECIFICATIONS.

8. SEE SHEET S801 FOR BRACE ELEVATIONS.
10. SEE SHEET S201 FOR ALL COLUMN SIZES NOT SHOWN.
11. ▶— = MOMENT CONNECTION
LSH = LONG SIDE HORIZONTAL
LSV = LONG SIDE VERTICAL
HI = HIGH
LO = LOW
12. CC : INDICATES CARRIED COLUMN, SEE DETAIL 7/S401.
13. B.F.B. INDICATES BOTTOM FLANGE BRACE, SEE 1/S602 FOR DETAIL.
14. (SC) INDICATES SLIP CRITICAL CONNECTION, SEE 12/S402 FOR DETAIL.

TRUE NORTH
PROJECT NORTH

PROFESSIONAL SEAL
Matrix Structural Engineers
TBPE Firm Registration No. F-2640
STATE OF TEXAS
JAYNOOL A. KHAYRATTEE
68260
PROFESSIONAL ENGINEER
01/30/2020

LOGO/CONTACT
MATRIX STRUCTURAL ENGINEERS
5177 Richmond Avenue, Suite 670
Houston, TX 77056-2401
Tel: 713.664.0130
Fax: 713.664.1370
MSE - 18135

DESIGN TEAM
Architectural
Martinez Architects
Civil Engineer
Maverick Engineering
Structural
Matrix Structural engineers
MEP
DBR
Landscaping
KDC Associates

FIRE STATION #11
CITY OF MIDLAND
Briarwood Ave & Golden Gate Dr
Midland, TX 79707

PROJECT No: MA 18017
DATE: 01/30/2020

No.	Date	Description
	05/21/19	100% DD
	07/30/19	ISSUE FOR PERMIT
	01/30/20	100% ISSUE FOR BIDDING
1	02/19/20	ADDENDUM 2

HIGH ROOF FRAMING PLAN

S212

4.1616

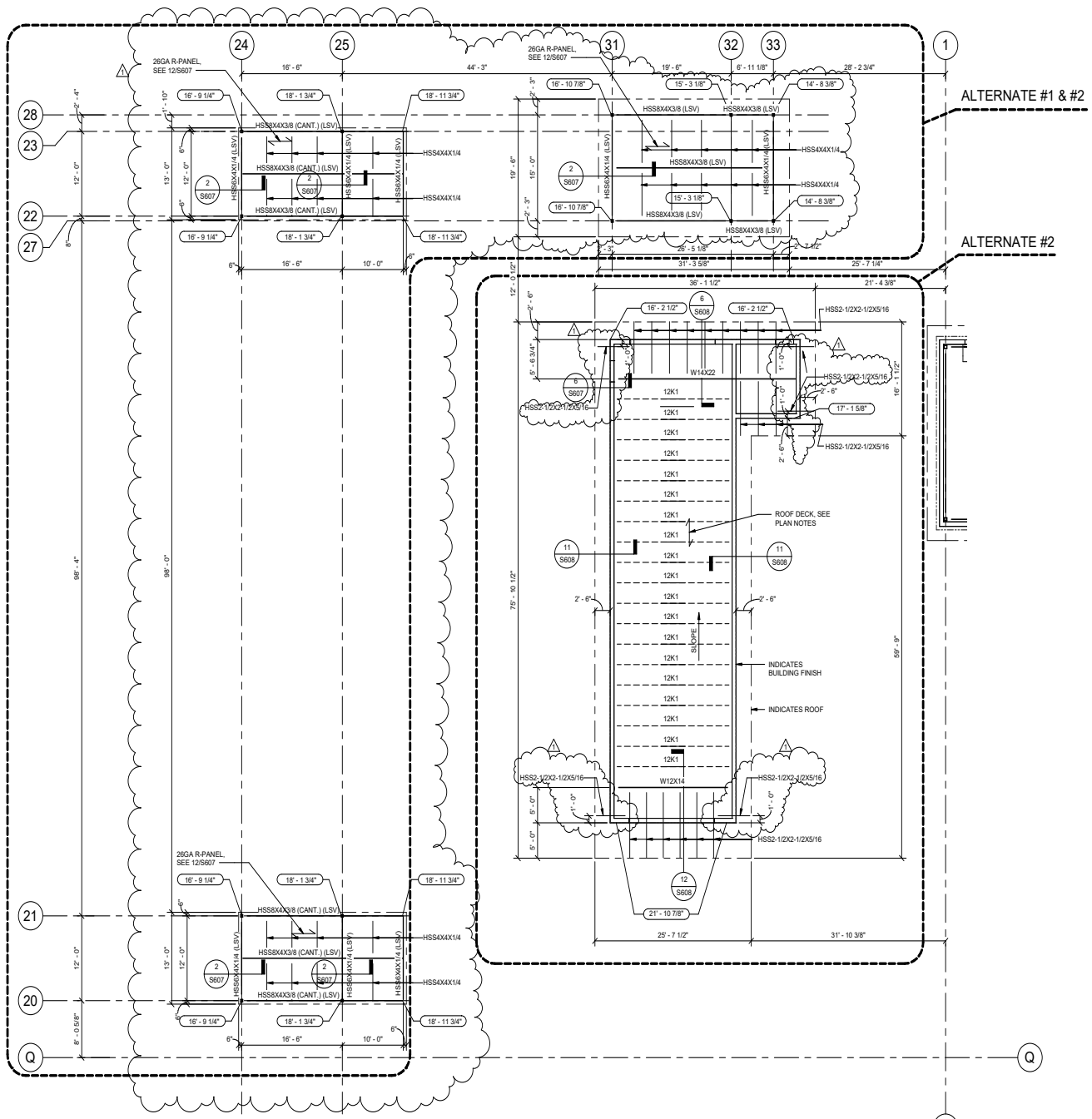

1 ROOF FRAMING PLANS - SUPPORT COMPONENTS
SCALE: 1/8" = 1'-0"

ROOF FRAMING PLAN NOTES:

1. LOCATIONS SHOWN THUS: ( ) INDICATES TOP OF STEEL (T.O.S.) ELEVATION (TOP OF STEEL = TOP OF JOIST OR BOTTOM OF DECK).
2. FIELD VERIFY ALL EXISTING CONDITIONS AND DIMENSIONS PRIOR TO FABRICATION / CONSTRUCTION.
3. JOISTS SHALL BE DESIGNED FOR ADDITIONAL LOADS RESULTING FROM RTU'S AND OTHER MECHANICAL EQUIPMENT ON THE ROOF OR SUSPENDED FROM THE ROOF STRUCTURE. SEE ARCHITECTURAL AND MEP DRAWINGS FOR LOCATIONS.
4. SPACE JOISTS EQUALLY, U.N.O.
5. PROVIDE 3/16" CLOSURE PLATES AT ALL TUBE BEAMS.
6. REFER TO ARCHITECTURAL DRAWINGS / MEP FOR LOCATIONS OF ROOF DRAINS, OVERFLOW DRAINS AND TAPERED INSULATION.

7a. ROOF SHALL BE 1.5B, 22GA DECK AS MANUFACTURED BY VULCRAFT OR EQUIVALENT. SEE ARCHITECTURAL DRAWINGS FOR INSULATION, ROOFING, ETC. WELD DECK USING 5/8"Ø NET EFFECTIVE PUDDLE WELDS:
a. PERPENDICULAR BEARING: 36/7 PATTERN.
b. PARALLEL BEARINGS AND EDGE: AT 6"O.C.
c. SIDE SEAMS: #10 TEK SCREWS AT 12"O.C.

7b. IN LIEU OF THE DECK ATTACHMENT SHOWN ABOVE, ALTERNATE DECK ATTACHMENT SHALL BE AS FOLLOWS:
a. REPLACE EACH 5/8"Ø WELD WITH ONE HILTI X-HSN 24 FASTENER FOR BASE STEEL FLANGE THICKNESS (tf) ≤ 3/8" AT THICKER BASE STEEL USE ONE HILTI X-ENP-19-L15 TYPE FASTENER.
b. REPLACE EACH SIDE SEAM #10 SCREW WITH ONE HILTI S-SLC 01 M HWH FASTENER FOR DECK THICKNESS LESS THAN OR EQUAL TO 20 GAGE.
c. ATTACHMENTS SHALL BE INSTALLED IN STRICT ACCORDANCE WITH MANUFACTURER SPECIFICATIONS.

8. SEE SHEET S801 FOR BRACE ELEVATIONS.
10. SEE SHEET S201 FOR ALL COLUMN SIZES NOT SHOWN.
11. ▶— = MOMENT CONNECTION
LSH = LONG SIDE HORIZONTAL
LSV = LONG SIDE VERTICAL
HI = HIGH
LO = LOW
12. CC : INDICATES CARRIED COLUMN, SEE DETAIL 7/S401.
13. B.F.B. INDICATES BOTTOM FLANGE BRACE, SEE 1/S602 FOR DETAIL.
14. (SC) INDICATES SLIP CRITICAL CONNECTION, SEE 12/S402 FOR DETAIL.

TRUE NORTH
PROJECT NORTH

PROFESSIONAL SEAL
Matrix Structural Engineers
TBPE Firm Registration No. F-2640
STATE OF TEXAS
JAYNOOL A. KHAYRATTEE
68260
LICENSED PROFESSIONAL ENGINEER
01/30/2020

LOGO/CONTACT
MATRIX STRUCTURAL ENGINEERS
5177 Richmond Avenue, Suite 670
Houston, TX 77056-2401
Tel: 713.664.0130
Fax: 713.664.1370
MSE - 18135

DESIGN TEAM
Architectural
Martinez Architects
Civil Engineer
Maverick Engineering
Structural
Matrix Structural engineers
MEP
DBR
Landscaping
KDC Associates

FIRE STATION #11
CITY OF MIDLAND
Briarwood Ave & Golden Gate Dr
Midland, TX 79707

PROJECT No: **MA 18017**
DATE: **01/30/2020**

No.	Date	Description
	05/21/19	100% DD
	07/30/19	ISSUE FOR PERMIT
	01/30/20	100% ISSUE FOR BIDDING
1	02/19/20	ADDENDUM 2

ROOF FRAMING PLANS - SUPPORT COMPONENTS

S213

4.1617

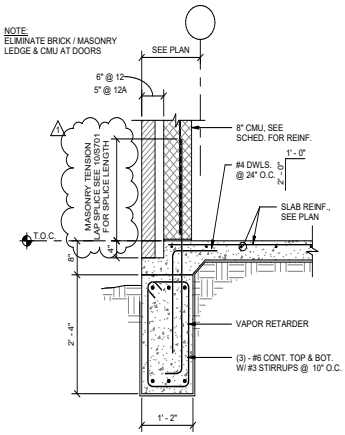

12A

TYPICAL DETAIL
EXTERIOR GRADE BEAM

12 SCALE: 3/4" = 1'-0"

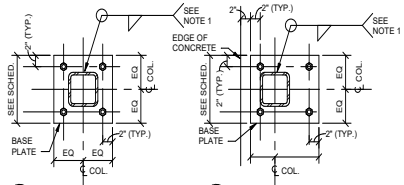

BASE PLATE SCHEDULE		
COLUMN	BASE PLATE	ANCHOR BOLTS
HSS 6 x 6	14" x 14" x 3/4"	(4)-3/4"Ø TYPE A
HSS 5 x 5	12" x 12" x 3/4"	(4)-3/4"Ø TYPE A

NOTES:
1. MINIMUM FILLET WELD ACCORDING TO AISC (1/4" MIN.). WELDING AROUND CORNER RADIUS IS NOT REQUIRED U.N.O.
2. USE OVERSIZED HOLES FOR ANCHOR RODS ACCORDING TO AISC.
3. WASHERS SHALL BE INSTALLED OVER OVERSIZED HOLES.
4. CONTRACTOR SHALL PROVIDE 1/8" THICK TEMPLATE FOR ANCHOR ROD INSTALLATION.

TYPICAL DETAIL
BASE PLATE AT HSS COLUMNS

9 SCALE: N.T.S.

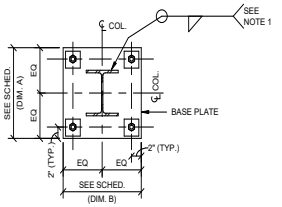

BASE PLATE AT W COLUMN

BASE PLATE SCHEDULE				
TYPE	BASE PLATE A x B x THICKNESS	ANCHOR BOLTS	BASE PLATE MATERIAL	WELD SIZE 'X' FOR BASE PLATE*
BP-2	16" x 16" x 1 1/4"	(4)-1"Ø TYPE B	ASTM A36	5/16"

* - PARTIAL PENETRATION GROOVE WELDS OF EQUAL CAPACITY OR COMPLETE JOINT PENETRATION GROOVE WELDS ARE ALSO ACCEPTABLE.

NOTES:
1. WELDING AROUND CORNER RADIUS IS NOT REQUIRED U.N.O.
2. USE OVERSIZED HOLES FOR ANCHOR RODS ACCORDING TO AISC.
3. WASHERS SHALL BE INSTALLED OVER OVERSIZED HOLES.
4. CONTRACTOR SHALL PROVIDE 1/8" THICK TEMPLATE FOR ANCHOR ROD INSTALLATION.
5. AT CONTRACTOR PREFERENCE BASE PLATE MAY BE SUBSTITUTED WITH 50 KSI STEEL ALTERNATE SHOWN.
6. GROUT HOLE DIAMETER MAY MATCH BOLT HOLE DIAMETER AT CONTRACTOR PREFERENCE.
7. GUSSET PLATE WELD TO BE DESIGNED BY FABRICATOR FOR FORCES SHOWN ON BRACE ELEVATIONS, BUT SHALL NOT BE LESS THAN THE SIZE SHOWN.

TYPICAL DETAIL
BASE PLATE AT WIDE FLANGE COLUMNS

6 SCALE: N.T.S.

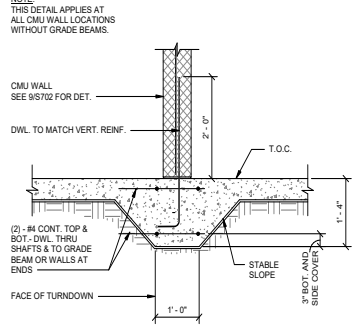

TYPICAL DETAIL
TURNDOWN AT CMU WALL

3 SCALE: N.T.S.

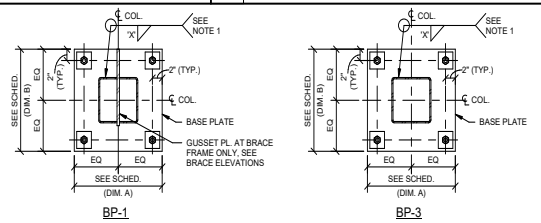

NOTES:
1. WELDING AROUND CORNER RADIUS IS NOT REQUIRED U.N.O.
2. USE OVERSIZED HOLES FOR ANCHOR RODS ACCORDING TO AISC.
3. WASHERS SHALL BE INSTALLED OVER OVERSIZED HOLES.
4. CONTRACTOR SHALL PROVIDE 1/8" THICK TEMPLATE FOR ANCHOR ROD INSTALLATION.
5. AT CONTRACTOR PREFERENCE BASE PLATE MAY BE SUBSTITUTED WITH 50 KSI STEEL ALTERNATE SHOWN.
6. GROUT HOLE DIAMETER MAY MATCH BOLT HOLE DIAMETER AT CONTRACTOR PREFERENCE.
7. GUSSET PLATE WELD TO BE DESIGNED BY FABRICATOR FOR FORCES SHOWN ON BRACE ELEVATIONS, BUT SHALL NOT BE LESS THAN THE SIZE SHOWN.

BASE PLATE SCHEDULE				
TYPE	BASE PLATE A x B x THICKNESS	ANCHOR BOLTS	BASE PLATE MATERIAL	WELD SIZE 'X' FOR BASE PLATE*
BP-1	14" x 14" x 1"	(4)-1"Ø TYPE B	ASTM A36	1/4"
BP-3	14" x 14" x 1"	(4)-1"Ø TYPE B	ASTM A36	1/4"

* - PARTIAL PENETRATION GROOVE WELDS OF EQUAL CAPACITY OR COMPLETE JOINT PENETRATION GROOVE WELDS ARE ALSO ACCEPTABLE.

TYPICAL DETAIL
BASE PLATE AT BRACE HSS COLUMNS

11 SCALE: N.T.S.

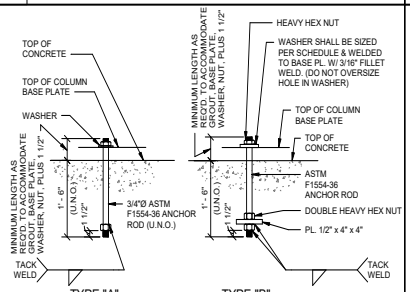

TYPE "B" WASHER SCHEDULE		
ANCHOR ROD DIA.	WASHER SIZE*	MIN. WASHER THICKNESS
3/4"	2"	1/4"
7/8"	2 1/2"	5/16"
1"	3"	3/8"
1 1/4"	3 1/2"	1/2"
1 1/2"	4"	1/2"
1 3/4"	4 1/2"	5/8"
2"	5"	3/4"
2 1/2"	5 1/2"	7/8"

NOTE:
USE TYPE "B" ANCHOR BOLTS AT COLUMNS WITH DIAGONAL BRACES, MOMENT CONNECTIONS, & AT CANOPY COLUMNS

*CIRCULAR OR SQUARE WASHERS MEETING WASHER SIZE ARE ACCEPTABLE

TYPICAL DETAIL ANCHOR BOLT

5 SCALE: N.T.S.

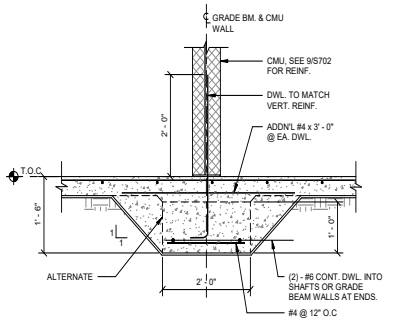

TYPICAL DETAIL
AT NON-LOAD BEARING CMU WALL

2 SCALE: N.T.S.

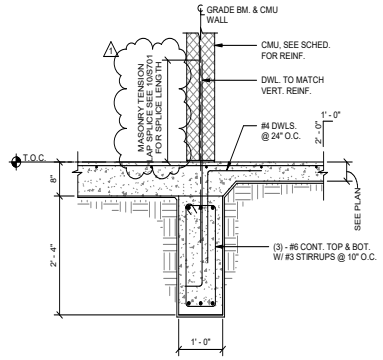

TYPICAL DETAIL
INTERIOR GRADE BEAM
AT NON-LOAD BEARING WALL

7 SCALE: 3/4" = 1'-0"

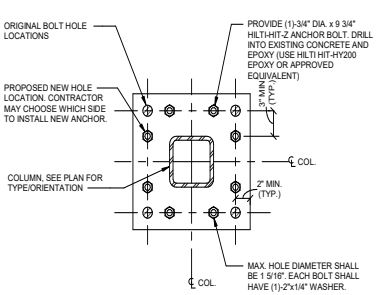

NOTES:
1. THIS DETAIL SHALL NOT BE USED AT BRACE FRAMES OR MOMENT FRAMES. ENGINEER APPROVAL IS REQUIRED PRIOR TO INSTALLATION FOR EA. LOCATION WITH DAMAGED ANCHOR BOLTS.
2. CUT AWAY DAMAGED ANCHOR BOLTS AND PROVIDE NEW HOLES FOR EPOXY ANCHOR.
3. HIT-Z-R ANCHORS SHALL BE USED IN LIEU OF HIT-Z ANCHORS AT COLUMNS EXPOSED TO WEATHER.

TYPICAL DETAIL
REPAIR AT GRAVITY BASE PLATE

4 SCALE: N.T.S.

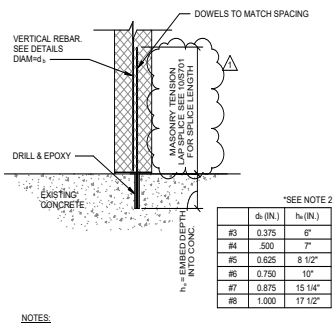

	d_b (IN.)	h_e (IN.)
#3	0.375	6"
#4	.500	7"
#5	0.625	8 1/2"
#6	0.750	10"
#7	0.875	15 1/4"
#8	1.000	17 1/2"

NOTES:
1. THIS DETAIL MAY BE USED IN LIEU OF CAST-IN-PLACE DOWELS WHERE SHOWN ON STRUCTURAL DETAILS EXCEPT WHERE PROHIBITED BY NOTE 2.
2. THIS DETAIL IS NOT APPLICABLE AT CANTILEVER WALLS OR WALLS SUBJECTED TO MOMENT AT THE BASE.
3. USE HILTI HIT-HY200 ADHESIVE SYSTEM OR APPROVED EQUIVALENT.

ALTERNATE DETAIL
EPOXY DOWELS AT CMU WALLS

1 SCALE: N.T.S.

4.1618

PROFESSIONAL SEAL
Matrix Structural Engineers
TBPE Firm Registration No. F-2640
STATE OF TEXAS
JAYNOOL A. KHAYRATTEE
65260
LICENSED PROFESSIONAL ENGINEER
01/30/2020

LOGO/CONTACT
MATRIX STRUCTURAL ENGINEERS
5177 Richmond Avenue, Suite 670
Houston, TX 77046-2401
Tel: 713.664.0133
Fax: 713.664.1370
MSE - 18135

DESIGN TEAM
Architectural
Martinez Architects
Civil Engineer
Maverick Engineering
Structural
Matrix Structural engineers
MEP
DBR
Landscaping
KDC Associates

FIRE STATION #11
CITY OF MIDLAND
Briarwood Ave & Golden Gate Dr
Midland, TX 79707

PROJECT No: **MA 18017**
DATE: **01/30/2020**

No.	Date	Description
	05/21/19	100% DD
	07/30/19	ISSUE FOR PERMIT
	01/30/20	100% ISSUE FOR BIDDING
1	02/19/20	ADDENDUM 2

FOUNDATION DETAILS

S305

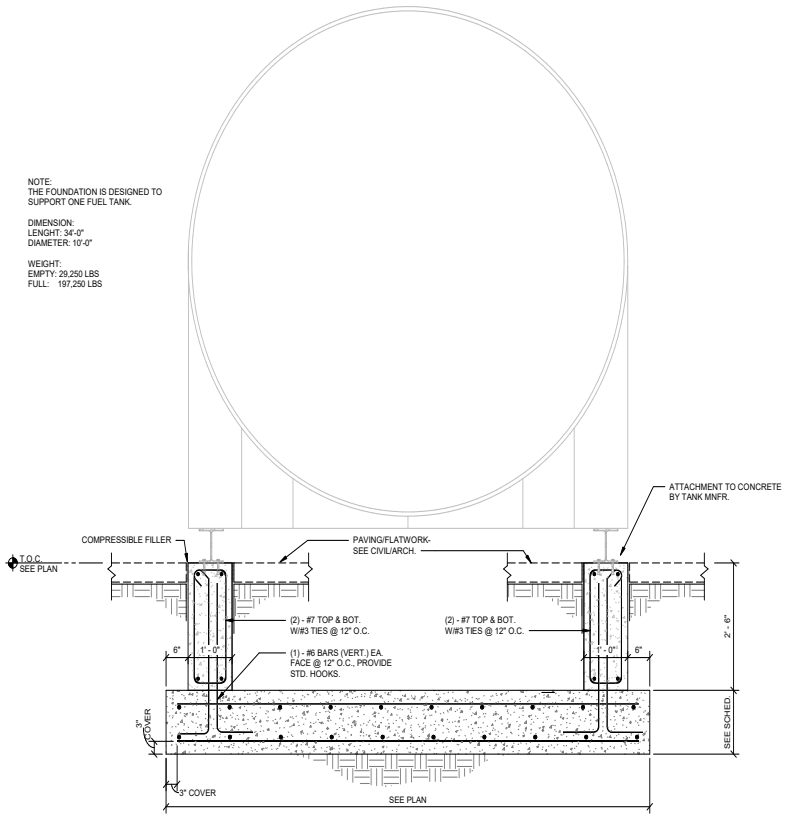

TYPICAL DETAIL FOUNDATION AT FUEL TANK

8 SCALE: 3/4" = 1'-0"

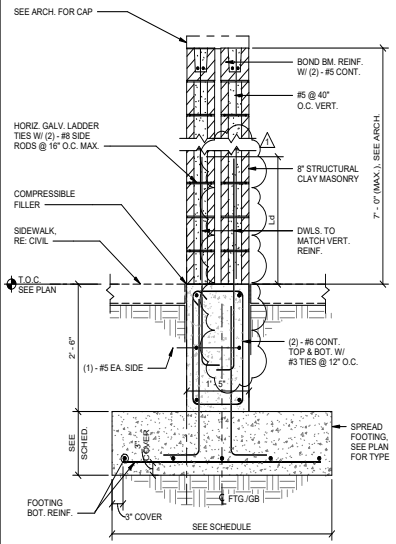

TYPICAL DETAIL
GRADE BEAM AT FREESTANDING WALL

2 SCALE: 3/4" = 1'-0"

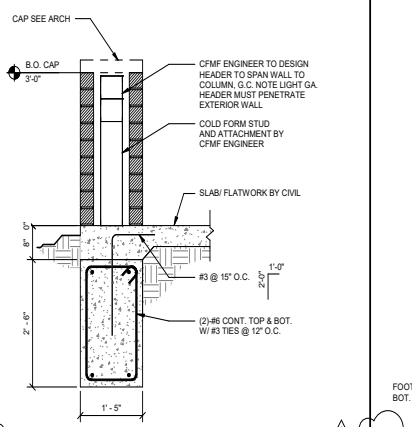

GRADE BEAM AT LOW WALL

7 SCALE: 3/4" = 1'-0"

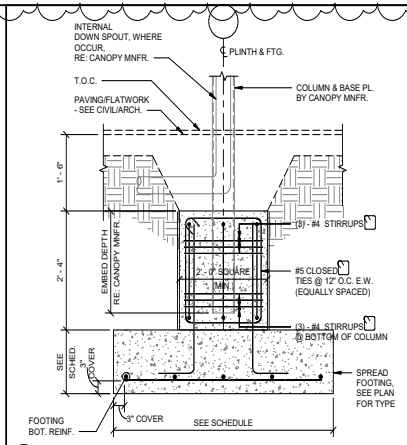

TYPICAL DETAIL EMBEDDED EXTERIOR
CANOPY COLUMN WITH PIER CAP

4 SCALE: 3/4" = 1'-0"

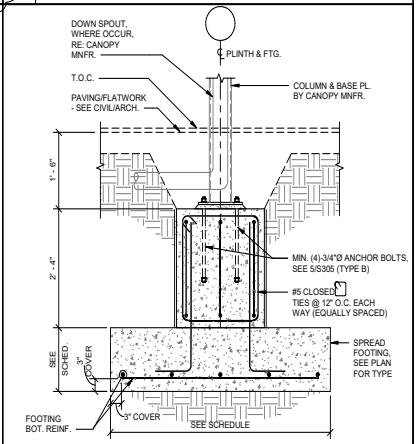

TYPICAL DETAIL
EXTERIOR CANOPY COLUMN WITH PIER CAP

1 SCALE: 3/4" = 1'-0"

4.1619

PROFESSIONAL SEAL

Matrix Structural Engineers
TBPE Firm Registration No. F-2640

01/30/2020

LOGO/CONTACT

MATRIX
STRUCTURAL
ENGINEERS

5177 Richmond Avenue, Suite 670
Houston, TX 77056-2401
Tel: 713.664.0133
Fax: 713.664.1370
MSE - 18135

DESIGN TEAM

Architectural
Martinez Architects

Civil Engineer
Maverick Engineering

Structural
Matrix Structural engineers

MEP
DBR

Landscaping
KDC Associates

FIRE STATION #11

CITY OF MIDLAND
Briarwood Ave & Golden Gate Dr
Midland, TX 79707

PROJECT No: **MA 18017**
DATE: **01/30/2020**

No.	Date	Description
	05/21/19	100% DD
	07/30/19	ISSUE FOR PERMIT
	01/30/20	100% ISSUE FOR BIDDING
1	02/19/20	ADDENDUM 2

FOUNDATION DETAILS

S306

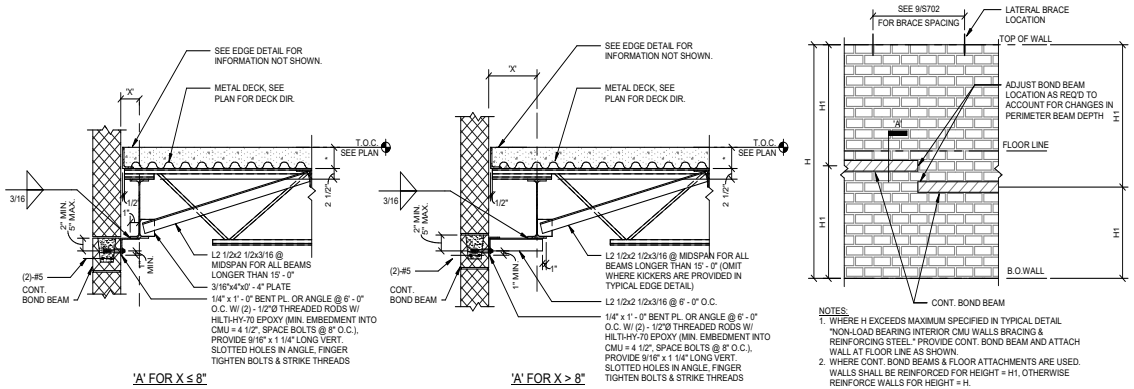

NOTES:
1. WHERE H EXCEEDS MAXIMUM SPECIFIED IN TYPICAL DETAIL "NON-LOAD BEARING INTERIOR CMU WALLS BRACING & REINFORCING STEEL." PROVIDE CONT. BOND BEAM AND ATTACH WALL AT FLOOR LINE AS SHOWN.
2. WHERE CONT. BOND BEAMS & FLOOR ATTACHMENTS ARE USED. WALLS SHALL BE REINFORCED FOR HEIGHT = H1, OTHERWISE REINFORCE WALLS FOR HEIGHT = H.
3. REDUCE BOLT EMBEDMENT TO 4" AT 6" THICK WALLS. USE HILTI HY70 EPOXY OR APPROVED EQUAL.
4. ALL WELDS ARE 3/16" FILLET ALL AROUND, U.N.O.

TYPICAL DETAIL
TALL INTERIOR NON-LOAD BEARING CMU WALL BRACING AT FLOOR LINE

12 SCALE: N.T.S.

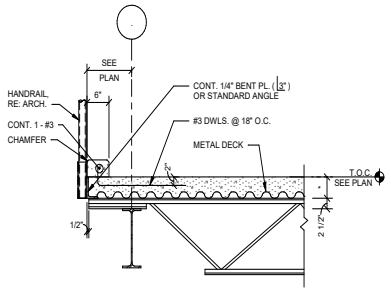

NOTE:
1. * : SEE PLAN NOTES.

TYPICAL DETAIL
AT HANDRAIL

3 SCALE: 3/4" = 1'-0"

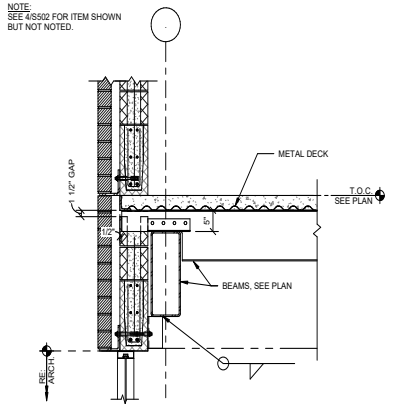

EXTERIOR DETAIL AT MEZZANINE

11 SCALE: 3/4" = 1'-0"

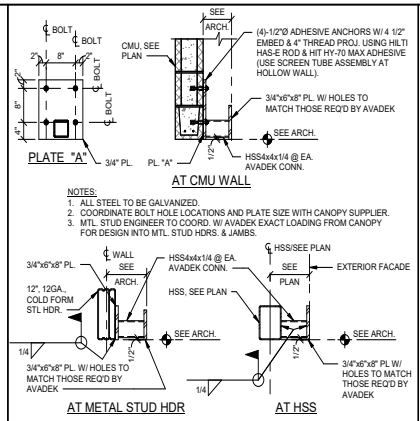

DETAIL AT AVADEK CANOPY CONNECTION

8 SCALE: N.T.S.

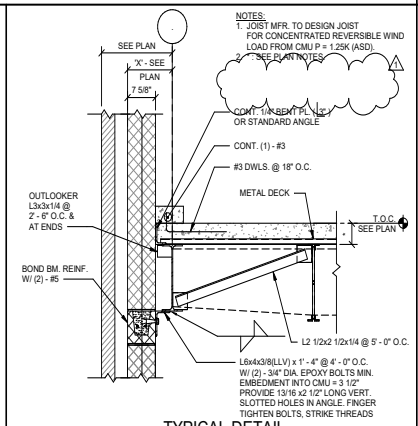

TYPICAL DETAIL
MASONRY SUPPORT - EXTERIOR

5 SCALE: 3/4" = 1'-0"

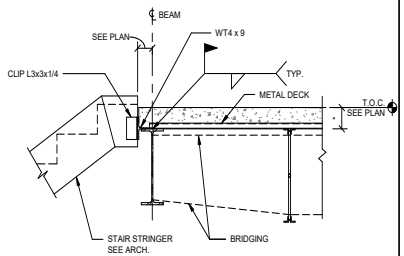

NOTE:
1. REFER TO STAIR DRAWINGS FOR CONNECTION OF STAIR STRINGERS TO BEAM.
2. * : SEE PLAN NOTES.

TYPICAL DETAIL
STAIR STRINGER CONNECTION
AT JOIST PARALLEL TO EDGE

2 SCALE: 3/4" = 1'-0"

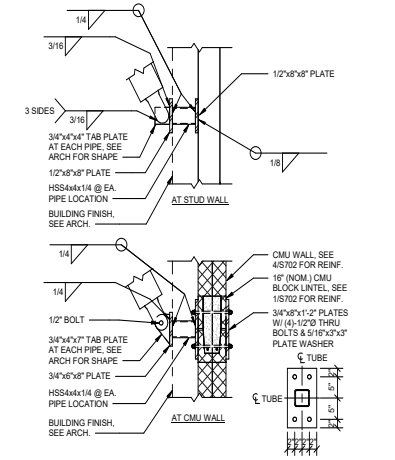

KICKER TO CMU/STUD CONNECTION DETAIL

10 SCALE: 3/4" = 1'-0"

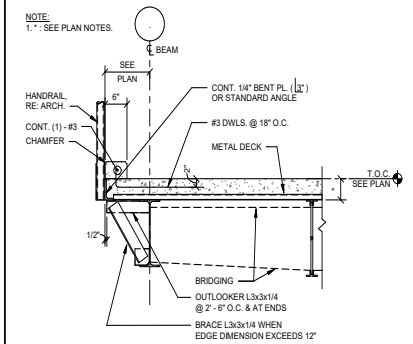

TYPICAL DETAIL
AT HANDRAIL

7 SCALE: 3/4" = 1'-0"

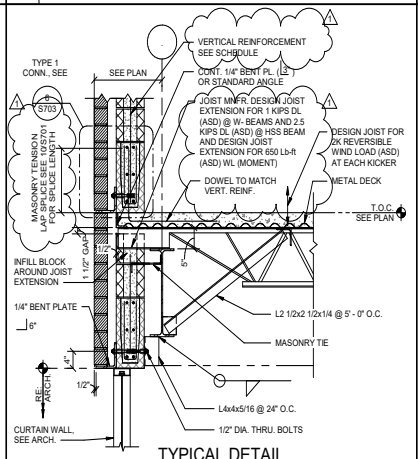

TYPICAL DETAIL
MASONRY SUPPORT - EXTERIOR

4 SCALE: 3/4" = 1'-0"

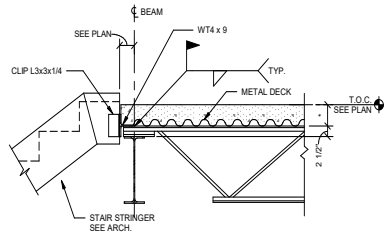

NOTE:
1. REFER TO STAIR DRAWINGS FOR CONNECTION OF STAIR STRINGERS TO BEAM.
2. * : SEE PLAN NOTES.

TYPICAL DETAIL
STAIR STRINGER CONNECTION
AT JOIST PERPENDICULAR TO EDGE

1 SCALE: 3/4" = 1'-0"

PROFESSIONAL SEAL
Matrix Structural Engineers
TBPE Firm Registration No. F-2640
STATE OF TEXAS
JAYNDOL A. KHAYBATTEE
68260
LICENSED
PROFESSIONAL ENGINEER
01/30/2020

LOGO/CONTACT
MATRIX STRUCTURAL ENGINEERS
5177 Richmond Avenue, Suite 670
Houston, TX 77056-2401
Tel: 713.664.0133
Fax: 713.664.1370
MSE - 18135

DESIGN TEAM
Architectural
Martinez Architects
Civil Engineer
Maverick Engineering
Structural
Matrix Structural engineers
MEP
DBR
Landscaping
KDC Associates

FIRE STATION #11
CITY OF MIDLAND
Briarwood Ave & Golden Gate Dr
Midland, TX 79707

PROJECT No: **MA 18017**
DATE: **01/30/2020**

No.	Date	Description
	05/21/19	100% DD
	07/30/19	ISSUE FOR PERMIT
	01/30/20	100% ISSUE FOR BIDDING
1	02/19/20	ADDENDUM 2

FLOOR FRAMING DETAILS

S502

4.1620

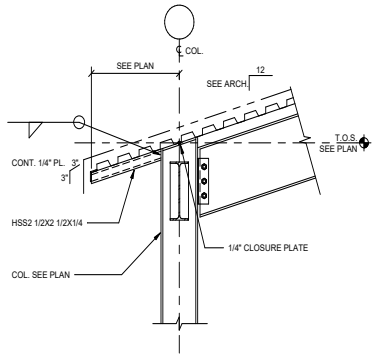

TYPICAL DETAIL
ROOF EDGE AT COLUMN WITH
W-BEAM PERPENDICULAR

12 SCALE: 1 1/2" = 1'-0"

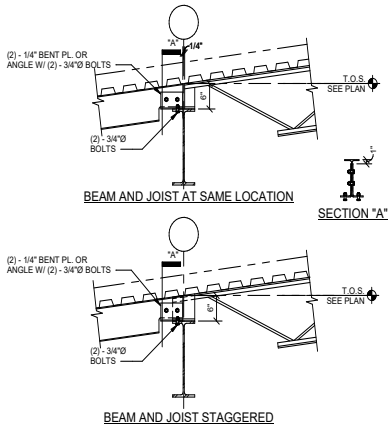

BEAM TO JOIST TRANSITION AT CANOPY

8 SCALE: 3/4" = 1'-0"

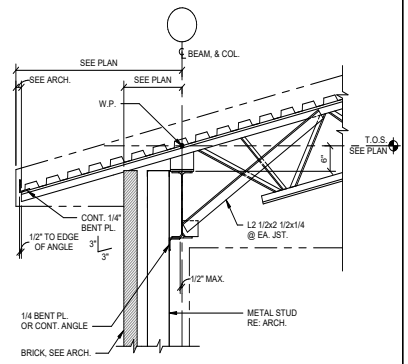

TYPICAL DETAIL
SLOPED OPEN WEB JOIST AT ROOF EDGE

6 SCALE: 3/4" = 1'-0"

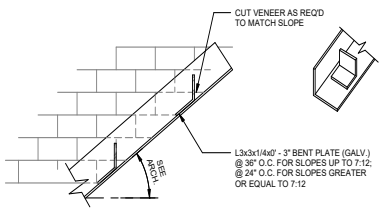

SUPPORT ANGLE AT SLOPED BRICK/STONE

3 SCALE: 1 1/2" = 1'-0"

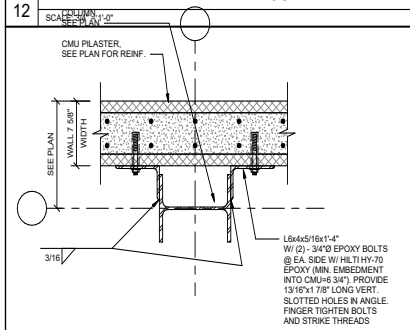

CMU TO COLUMN CONNECTION

11 SCALE: 1 1/2" = 1'-0"

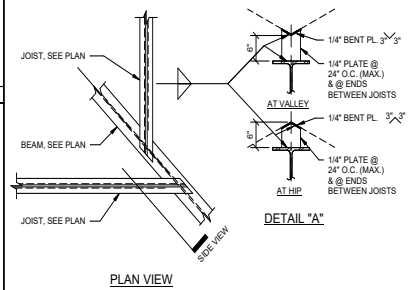

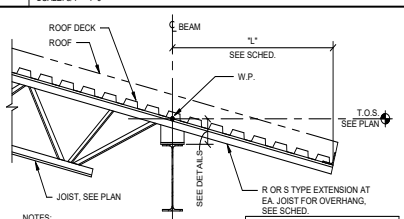

NOTES:
1. CONTRACTOR/JOIST MNFR. MAY CHOOSE EITHER TYPE JOIST EXTENSION SHOWN (OR LARGER) FOR "L" ≤ MAX. "L" SHOWN.
2. FOR ANY "L" JOIST, MNFR. MAY DESIGN JOIST EXTENSION FOR THE FOLLOWING CRITERIA IN LIEU OF SIZE SHOWN, U.N.O.:
TL = 240 PLF
TOTAL DEFLECTION ≤ 2 x "L" / 240
LL = 120 PLF
LIVE LOAD DEFLECTION < 2 x "L" / 360
MNFR. SHALL ACCOUNT FOR SKIP LOADING OF LIVE LOADS.
3. LOADS ON JOIST EXTENSIONS SHOWN ON PLAN OR IN DETAILS SHALL BE IN ADDITION TO THOSE SHOWN HERE. DEFLECTION CRITERIA SHALL REMAIN THE SAME AS SHOWN ABOVE. THE SCHEDULE SHOWN HERE DOES NOT APPLY WHERE ADDITIONAL LOADS ARE SHOWN.

TOP CHORD JOIST EXTENSION SCHED.*		
MAX. "L"	R-TYPE	S-TYPE
≤ 1' - 6"	R1	S3
2' - 0"	R1	S7
2' - 6"	R1	S10
3' - 0"	R1	S12
3' - 6"	R1	N/A
4' - 0"	R3	N/A
4' - 6"	R8	N/A
5' - 0"	R11	N/A
≥ 5' - 6"	DESIGN SPECIAL EXTENSION	

*CONTRACTOR/FABRICATOR MAY CHOOSE EITHER TYPE JOIST EXTENSION FOR "L" ≤ MAX. "L" SHOWN

TYPICAL DETAIL
K-JOIST EXTENSION SCHEDULE

5 SCALE: N.T.S.

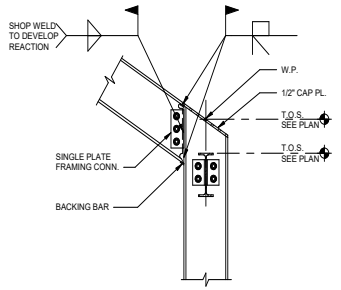

NOTE:
1. BOLTS IN WEB CONNECTION SHALL BE TIGHTENED PRIOR TO WELDING OF FLANGES.

TYPICAL DETAIL
STEEL BEAM TO COLUMN FLANGE
MOMENT CONNECTION

2 SCALE: N.T.S.

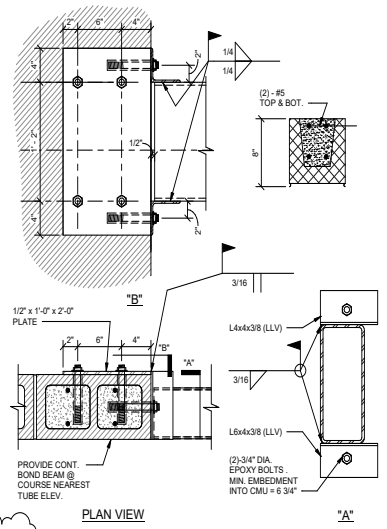

HSS TUBE AT CMU WALL

10 SCALE: 1 1/2" = 1'-0"

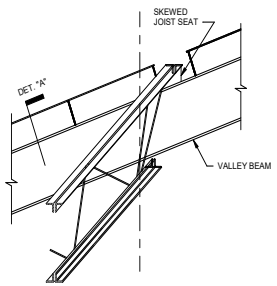

DETAIL AT HIP AND VALLEY

7 SCALE: N.T.S.

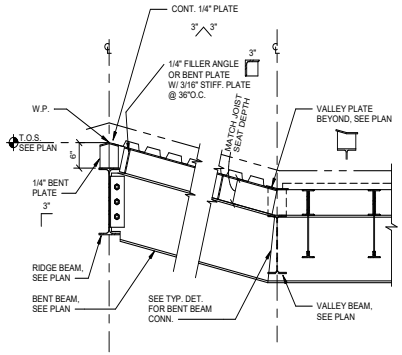

TYPICAL DETAIL
CHANGE IN DECK DIRECTION AT BENT BEAM

4 SCALE: N.T.S.

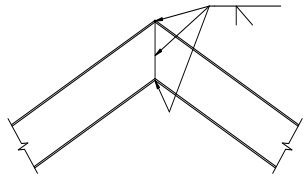

TYPICAL DETAIL
BENT BEAM

1 SCALE: N.T.S.

PROFESSIONAL SEAL

Matrix Structural Engineers
TBPE Firm Registration No. F-2640

01/30/2020

LOGO/CONTACT

MATRIX
STRUCTURAL
ENGINEERS

5177 Richmond Avenue, Suite 670
Houston, TX 77056-2401
Tel: 713.664.0133
Fax: 713.664.1370
MSE - 18135

DESIGN TEAM

Architectural
Martinez Architects

Civil Engineer
Maverick Engineering

Structural
Matrix Structural engineers

MEP
DBR

Landscaping
KDC Associates

FIRE STATION #11

CITY OF MIDLAND
Briarwood Ave & Golden Gate Dr
Midland, TX 79707

PROJECT No: **MA 18017**
DATE: **01/30/2020**

No.	Date	Description
	05/21/19	100% DD
	07/30/19	ISSUE FOR PERMIT
	01/30/20	100% ISSUE FOR BIDDING
1	02/19/20	ADDENDUM 2

ROOF FRAMING DETAILS

S603

4.1621

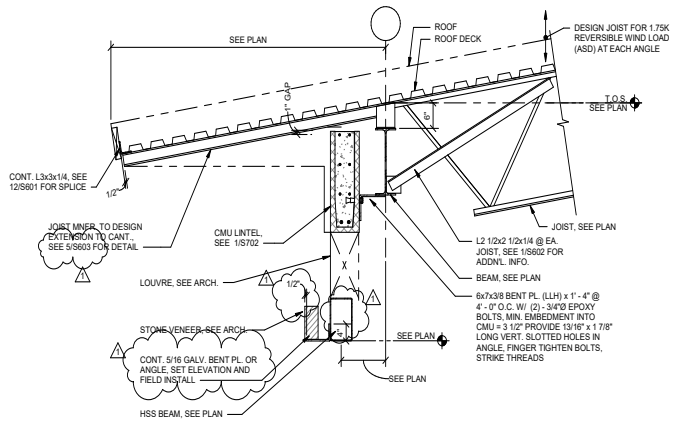

ROOF FRAMING DETAIL

6 SCALE: 3/4" = 1'-0"

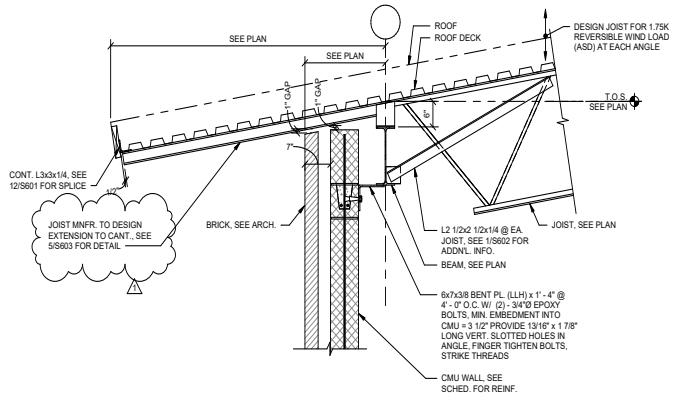

ROOF FRAMING DETAIL

3 SCALE: 3/4" = 1'-0"

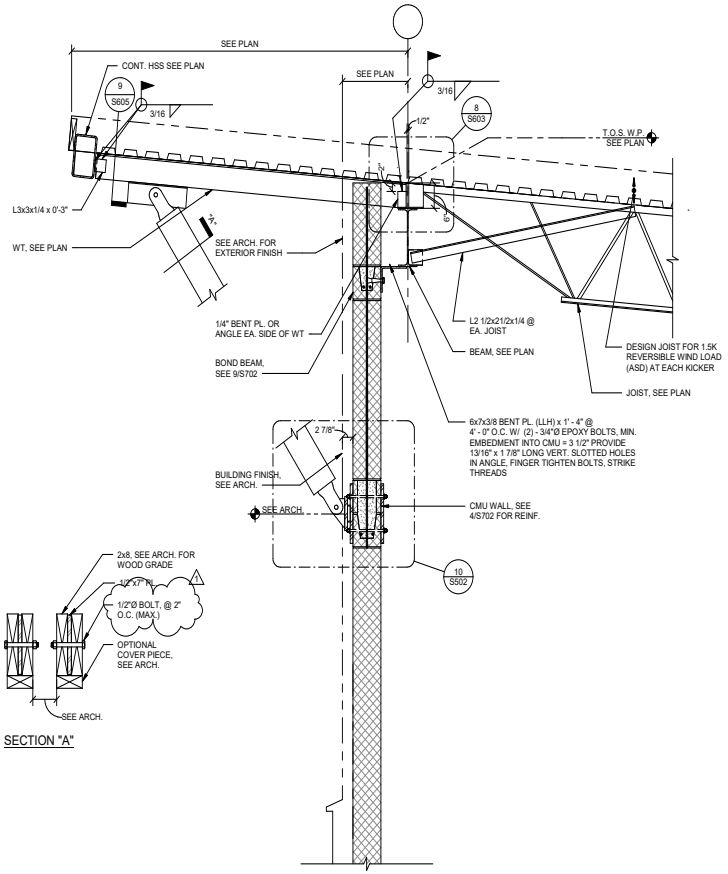

ROOF FRAMING DETAIL

7 SCALE: 3/4" = 1'-0"

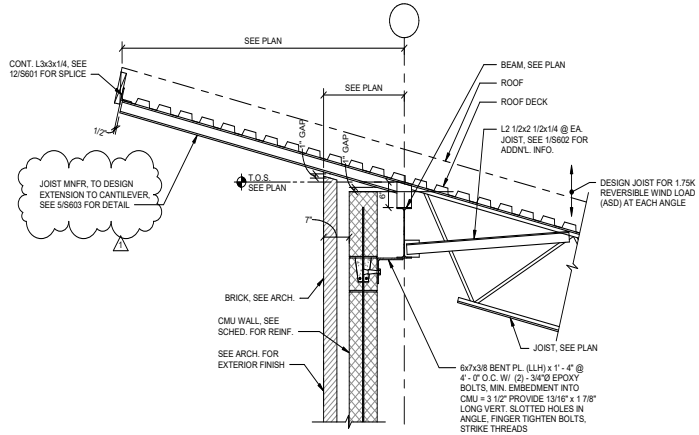

2 SCALE: 3/4" = 1'-0"

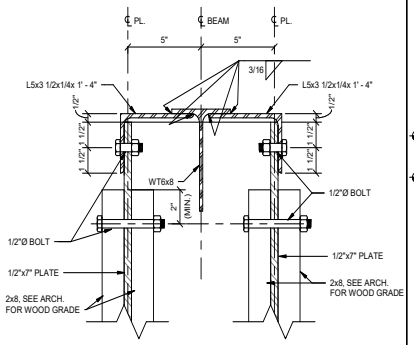

TUBE TO WT CONNECTION

9 SCALE: 3" = 1'-0"

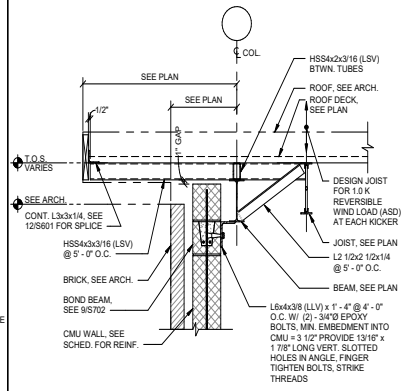

ROOF FRAMING DETAIL

1 SCALE: 3/4" = 1'-0"

PROFESSIONAL SEAL

Matrix Structural Engineers
TBPE Firm Registration No. F-2640

STATE OF TEXAS
JAYNDOL A. KHAYRATTEE
65260
LICENSED
PROFESSIONAL ENGINEER

01/30/2020

LOGO/CONTACT

MATRIX STRUCTURAL ENGINEERS

5177 Richmond Avenue, Suite 670
Houston, TX 77056-2401
Tel: 713.664.0133
Fax: 713.664.1370
Firm Reg. No. F-2640
MSE - 18135

DESIGN TEAM

Architectural
Martinez Architects

Civil Engineer
Maverick Engineering

Structural
Matrix Structural engineers

MEP
DBR

Landscaping
KDC Associates

FIRE STATION #11

CITY OF MIDLAND

Briarwood Ave & Golden Gate Dr
Midland, TX 79707

PROJECT No: **MA 18017**
DATE: **01/30/2020**

No.	Date	Description
	05/21/19	100% DD
	07/30/19	ISSUE FOR PERMIT
	01/30/20	100% ISSUE FOR BIDDING
1	02/19/20	ADDENDUM 2

ROOF FRAMING DETAILS

S605

4.1622

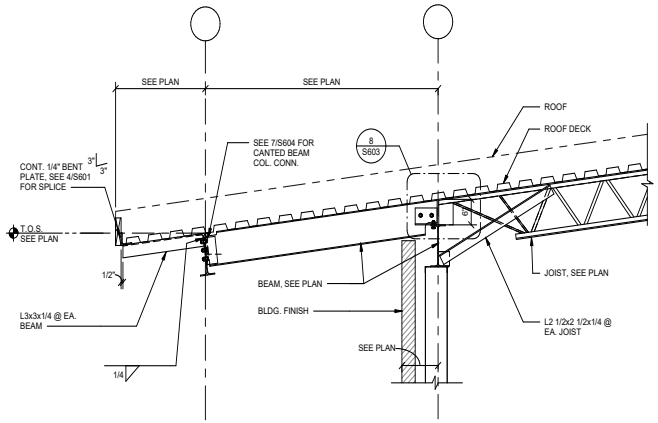

12 SCALE: 3/4" = 1'-0"

ROOF FRAMING DETAIL

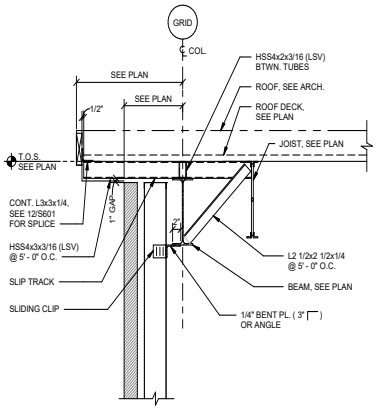

6 SCALE: 3/4" = 1'-0"

ROOF FRAMING DETAIL

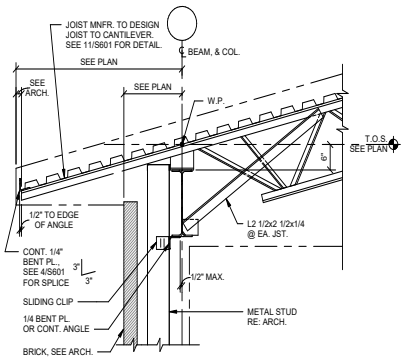

3 SCALE: 3/4" = 1'-0"

TYPICAL DETAIL
SLOPED OPEN WEB JOIST AT ROOF EDGE

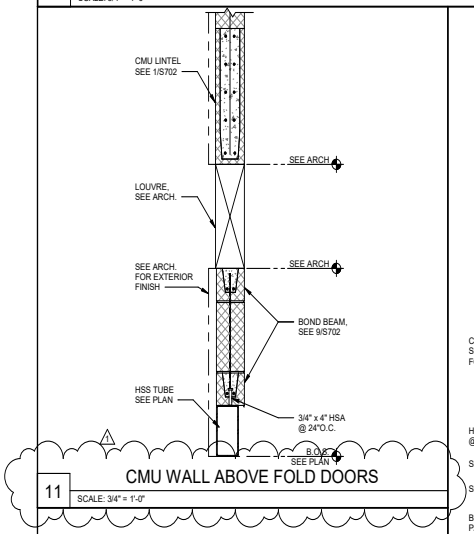

11 SCALE: 3/4" = 1'-0"

CMU WALL ABOVE FOLD DOORS

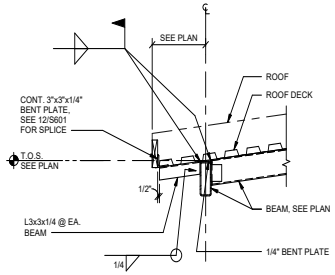

10 SCALE: 3/4" = 1'-0"

ROOF FRAMING DETAIL

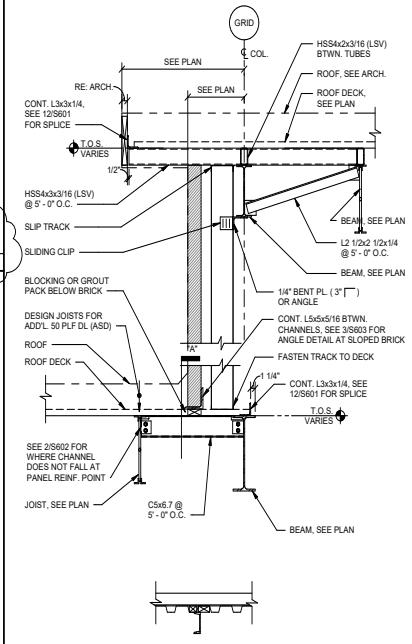

SECTION "A"

7 SCALE: 3/4" = 1'-0"

ROOF FRAMING DETAIL

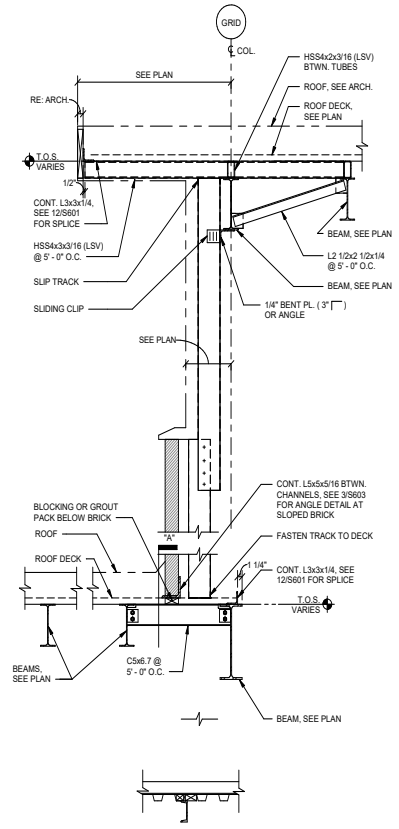

SECTION "A"

4 SCALE: 3/4" = 1'-0"

ROOF FRAMING DETAIL

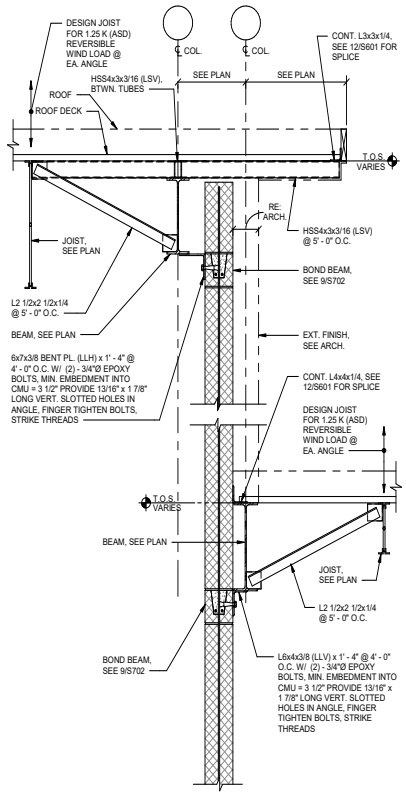

1 SCALE: 3/4" = 1'-0"

ROOF FRAMING DETAIL

4.1623

PROFESSIONAL SEAL

Matrix Structural Engineers
TBPE Firm Registration No. F-2640

STATE OF TEXAS
JAYNDOL A. KHAYRATTEE
68260
LICENSED
PROFESSIONAL ENGINEER

01/30/2020

LOGO/CONTACT

MATRIX
STRUCTURAL
ENGINEERS

5177 Richmond Avenue, Suite 670
Houston, TX 77056-2401
Tel: 713.664.0133
Fax: 713.664.1370
MSE - 18135

DESIGN TEAM

Architectural
Martinez Architects

Civil Engineer
Maverick Engineering

Structural
Matrix Structural engineers

MEP
DBR

Landscaping
KDC Associates

FIRE STATION #11
CITY OF MIDLAND
Briarwood Ave & Golden Gate Dr
Midland, TX 79707

PROJECT No: **MA 18017**
DATE: **01/30/2020**

No.	Date	Description
	05/21/19	100% DD
	07/30/19	ISSUE FOR PERMIT
	01/30/20	100% ISSUE FOR BIDDING
1	02/19/20	ADDENDUM 2

ROOF FRAMING DETAILS

S606

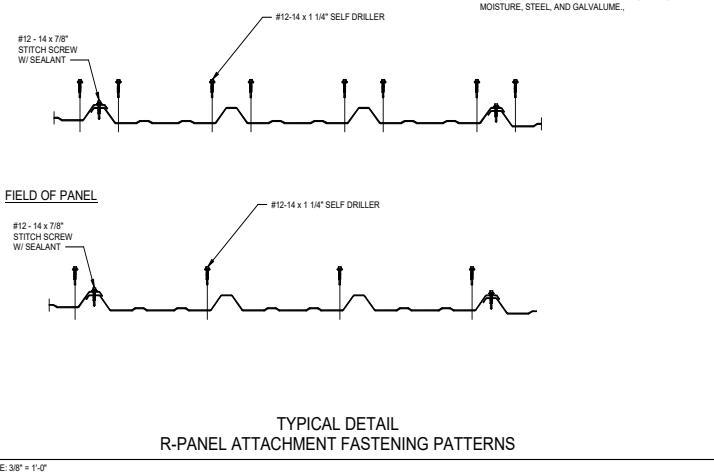

NOTE:
ALL FASTENERS SHALL BE CONSTRUCTED OF A MATERIAL OR CONTAIN A COATING SUCH THAT THEY ARE CORROSION RESISTANT WHEN EXPOSED TO MOISTURE, STEEL, AND GALVALUME.,

TYPICAL DETAIL
R-PANEL ATTACHMENT FASTENING PATTERNS

12 SCALE: 3/8" = 1'-0"

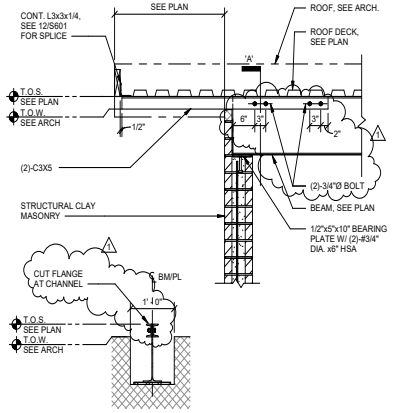

SECTION 'A'

ROOF FRAMING DETAIL

6 SCALE: 3/4" = 1'-0"

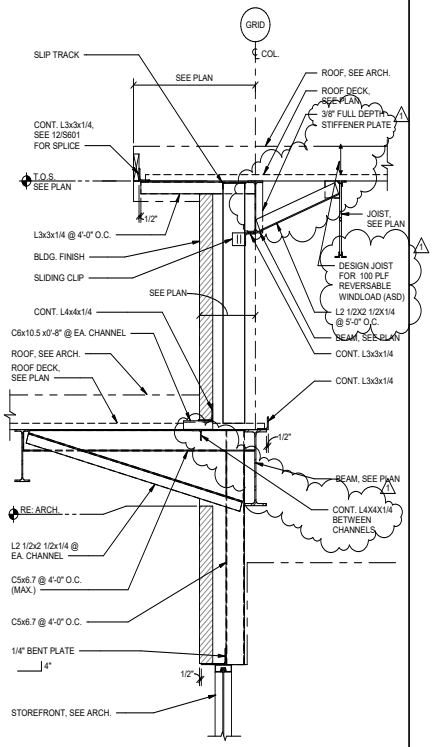

ROOF FRAMING DETAIL

5 SCALE: 3/4" = 1'-0"

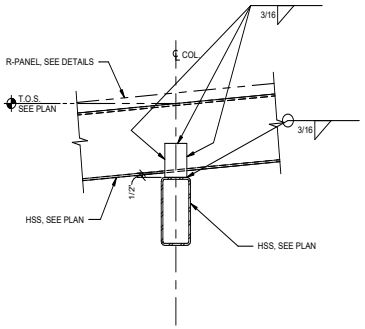

2 SCALE: 1 1/2" = 1'-0"

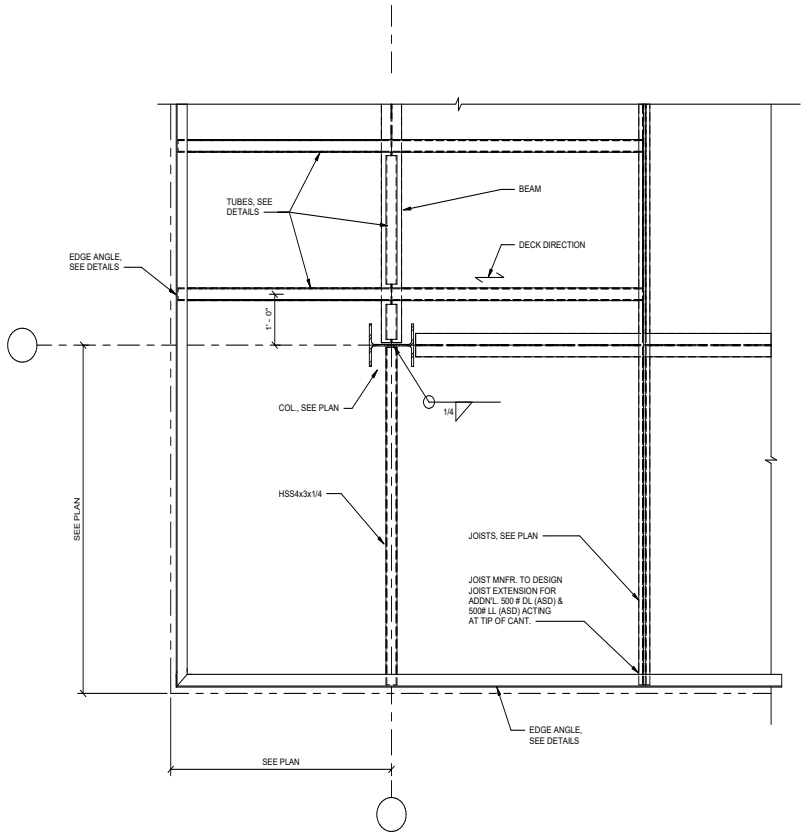

EXTERIOR PERIMETER CORNER ROOF FRAMING DETAIL

10 SCALE: 3/4" = 1'-0"

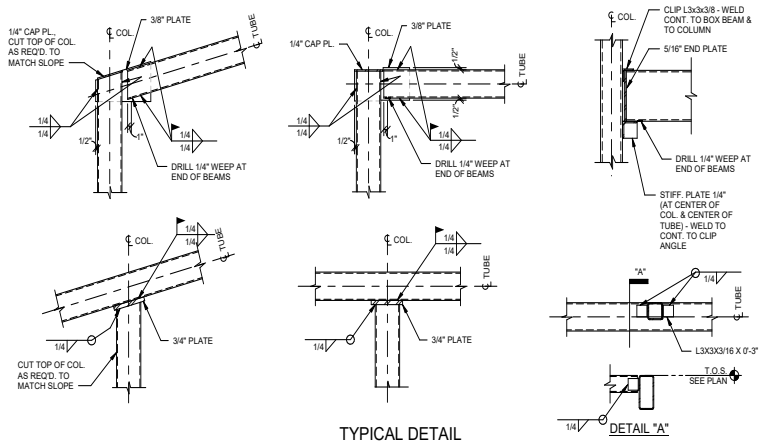

TYPICAL DETAIL
TUBE BEAM TO TUBE COLUMN CONNECTION

3 SCALE: 3/4" = 1'-0"

4.1624

PROFESSIONAL SEAL
Matrix Structural Engineers
TBPE Firm Registration No. F-2640
STATE OF TEXAS
JAYNDOL A. KHAYRATTEE
65260
LICENSED PROFESSIONAL ENGINEER
01/30/2020

LOGO/CONTACT
MATRIX STRUCTURAL ENGINEERS
5177 Richmond Avenue, Suite 670
Houston, TX 77056-2401
Tel: 713.664.0130
Fax: 713.664.1370
MSE - 18135

DESIGN TEAM
Architectural
Martinez Architects
Civil Engineer
Maverick Engineering
Structural
Matrix Structural engineers
MEP
DBR
Landscaping
KDC Associates

FIRE STATION #11
CITY OF MIDLAND
Briarwood Ave & Golden Gate Dr
Midland, TX 79707

PROJECT No: **MA 18017**
DATE: **01/30/2020**

No.	Date	Description
	05/21/19	100% DD
	07/30/19	ISSUE FOR PERMIT
	01/30/20	100% ISSUE FOR BIDDING
1	02/19/20	ADDENDUM 2

ROOF FRAMING DETAILS

S607

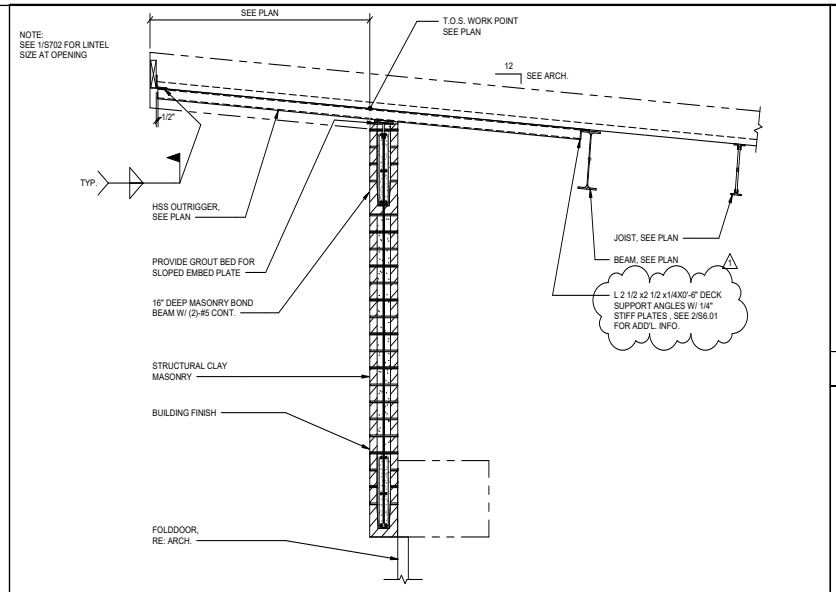

12 ROOF FRAMING DETAIL

SCALE: 3/4" = 1'-0"

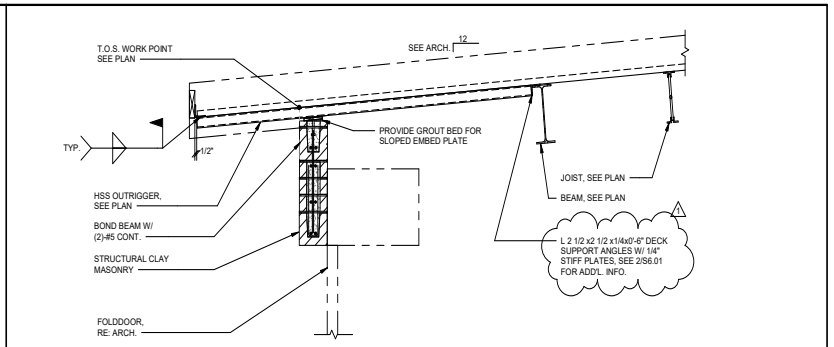

6 ROOF FRAMING DETAIL

SCALE: 3/4" = 1'-0"

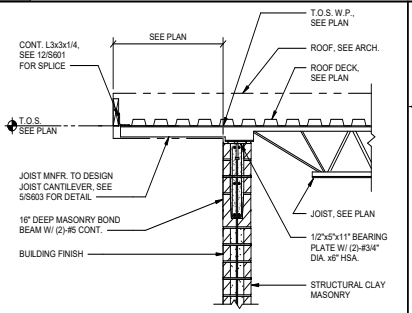

11 ROOF FRAMING DETAIL AT OUTBUILDINGS

SCALE: 3/4" = 1'-0"

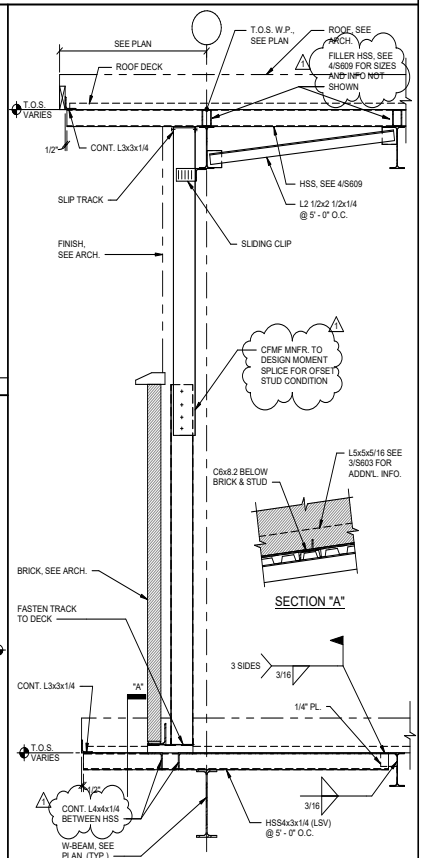

7 DETAIL AT ROOF

SCALE: 3/4" = 1'-0"

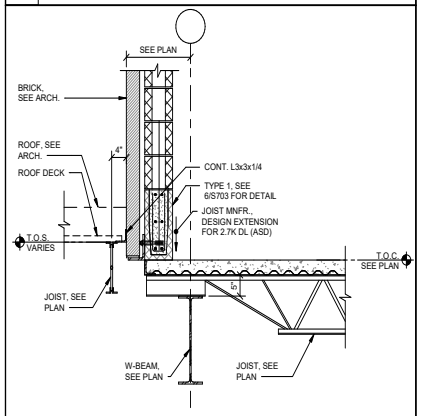

10 DETAIL AT ROOF

SCALE: 3/4" = 1'-0"

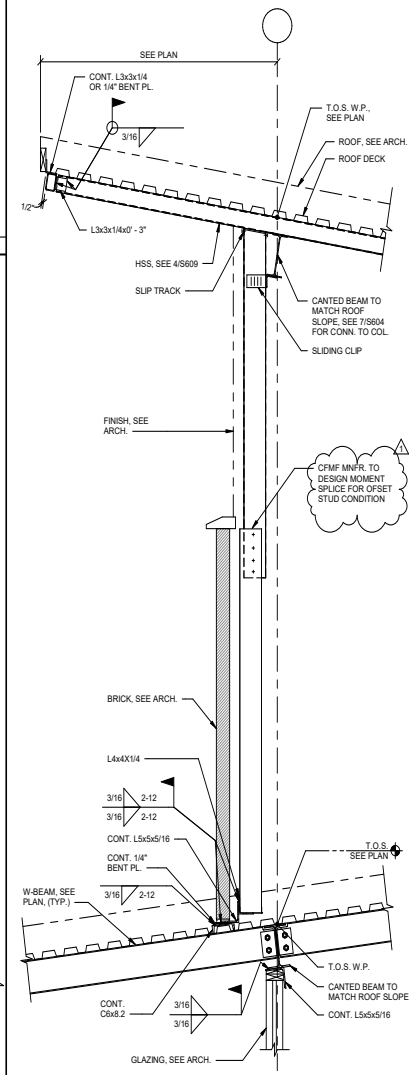

4 DETAIL AT ROOF

SCALE: 3/4" = 1'-0"

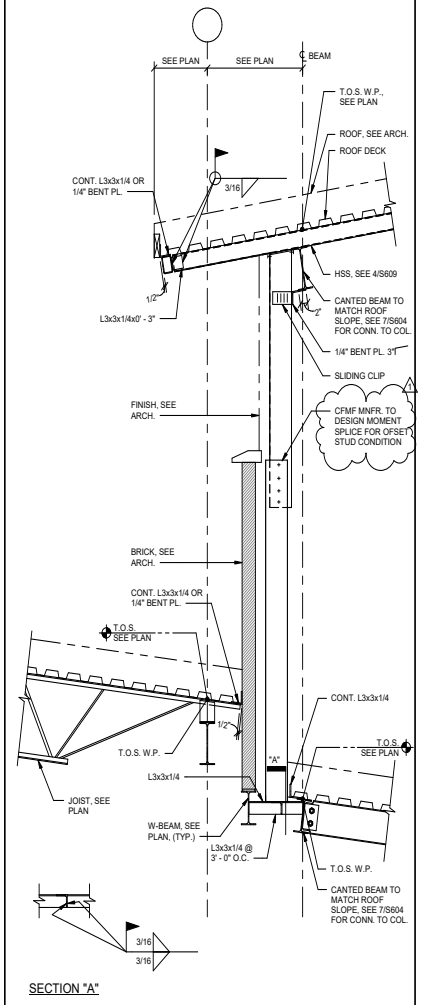

1 DETAIL AT ROOF

SCALE: 3/4" = 1'-0"

PROFESSIONAL SEAL
Matrix Structural Engineers
TBPE Firm Registration No. F-2640
STATE OF TEXAS
JAYNOOL A. KHAYRATTEE
65260
LICENSED PROFESSIONAL ENGINEER
01/30/2020

LOGO/CONTACT
MATRIX STRUCTURAL ENGINEERS
5177 Richmond Avenue, Suite 670
Houston, TX 77056-2401
Tel: 713.664.0133
Fax: 713.664.1370
MSE - 18135

DESIGN TEAM

Architectural
Martinez Architects

Civil Engineer
Maverick Engineering

Structural
Matrix Structural engineers

MEP
DBR

Landscaping
KDC Associates

FIRE STATION #11

CITY OF MIDLAND
Briarwood Ave & Golden Gate Dr
Midland, TX 79707

PROJECT No: **MA 18017**
DATE: **01/30/2020**

No.	Date	Description
	05/21/19	100% DD
	07/30/19	ISSUE FOR PERMIT
	01/30/20	100% ISSUE FOR BIDDING
1	02/19/20	ADDENDUM 2

ROOF FRAMING DETAILS

S608

4.1625

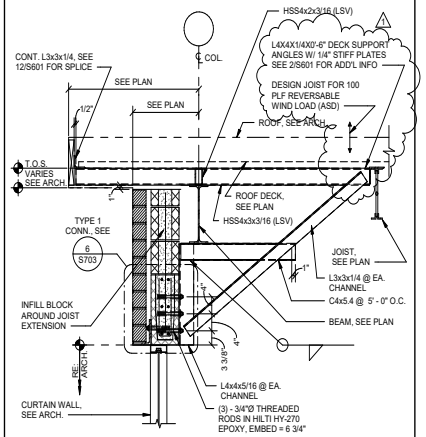

12 SCALE: 3/4" = 1'-0"

DETAIL AT MEZZANINE

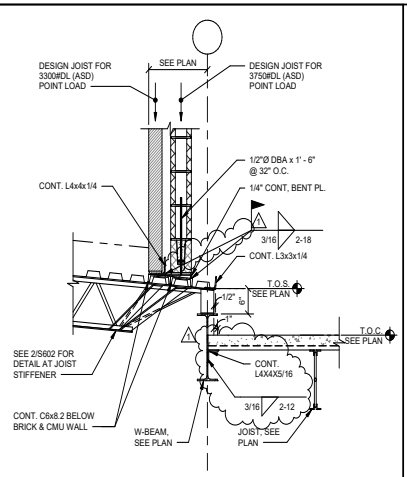

9 SCALE: 3/4" = 1'-0"

DETAIL AT ROOF/MEZZANINE

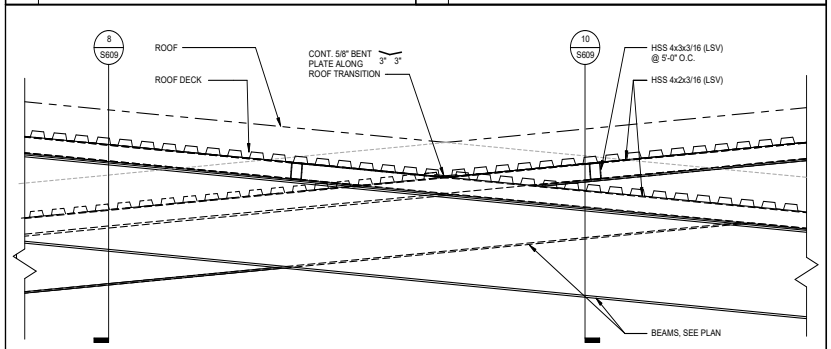

NOTE:
PERIMETER ANGLE NOT SHOWN FOR CLARITY.
COPE AT TRANSITION TO MATCH SLOPE.

11 SCALE: 3/4" = 1'-0"

DECK SUPPORT AT ROOF TRANSITION

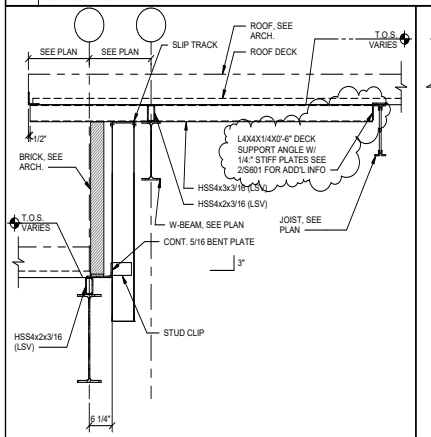

10 SCALE: 3/4" = 1'-0"

DETAIL AT ROOF

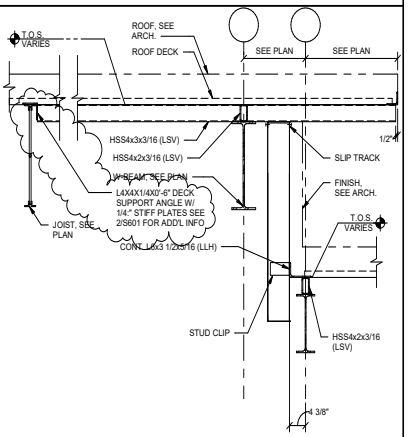

8 SCALE: 3/4" = 1'-0"

DETAIL AT ROOF

NOTE:
1. SEE SHEET S212 FOR ADDN'L. INFO.

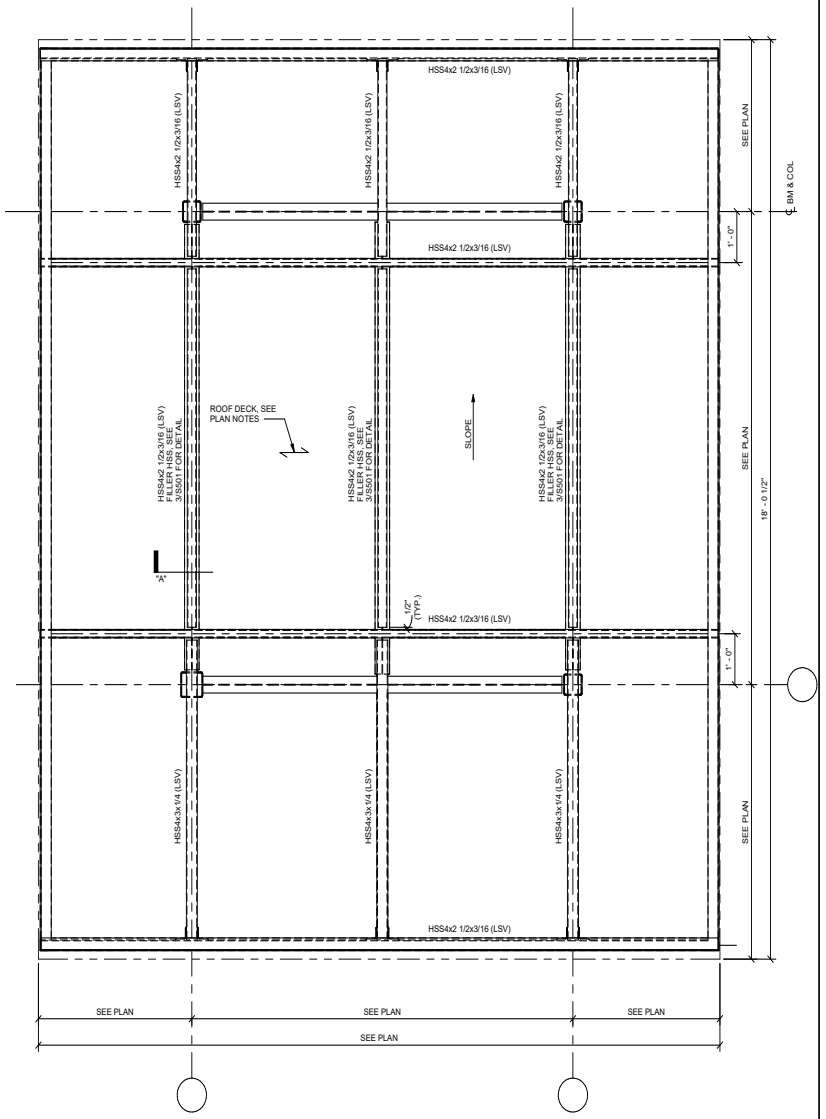

SECTION "A"

4 SCALE: 3/4" = 1'-0"

PARTIAL ENLARGED HIGH ROOF FRAMING PLAN - FIRE STATION

PROFESSIONAL SEAL
Matrix Structural Engineers
TBPE Firm Registration No. F-2640
STATE OF TEXAS
JAYNDOL A. KHAYRATTEE
68260
LICENSED PROFESSIONAL ENGINEER
01/30/2020

LOGO/CONTACT
MATRIX STRUCTURAL ENGINEERS
5177 Richmond Avenue, Suite 670
Houston, TX 77046-2401
Tel: 713.664.0130
Fax: 713.664.1370
MSE - 18135

DESIGN TEAM
Architectural
Martinez Architects
Civil Engineer
Maverick Engineering
Structural
Matrix Structural engineers
MEP
DBR
Landscaping
KDC Associates

FIRE STATION #11
CITY OF MIDLAND
Briarwood Ave & Golden Gate Dr
Midland, TX 79707

PROJECT No: **MA 18017**
DATE: **01/30/2020**

No.	Date	Description
	05/21/19	100% DD
	07/30/19	ISSUE FOR PERMIT
	01/30/20	100% ISSUE FOR BIDDING
1	02/19/20	ADDENDUM 2

ROOF FRAMING DETAILS

S609

4.1626

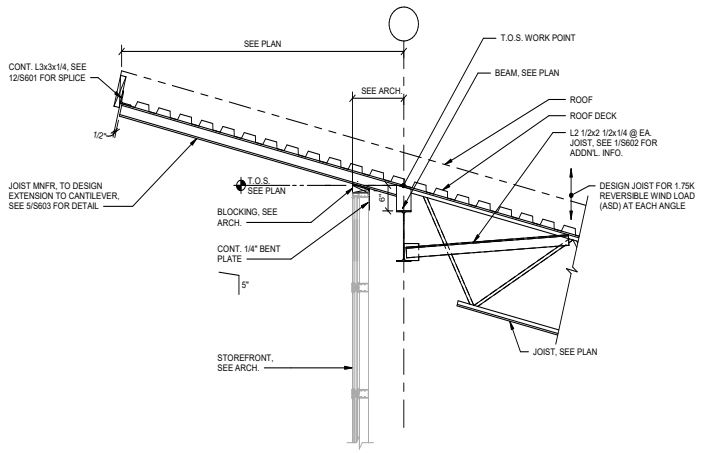

6

SCALE: 3/4" = 1'-0"

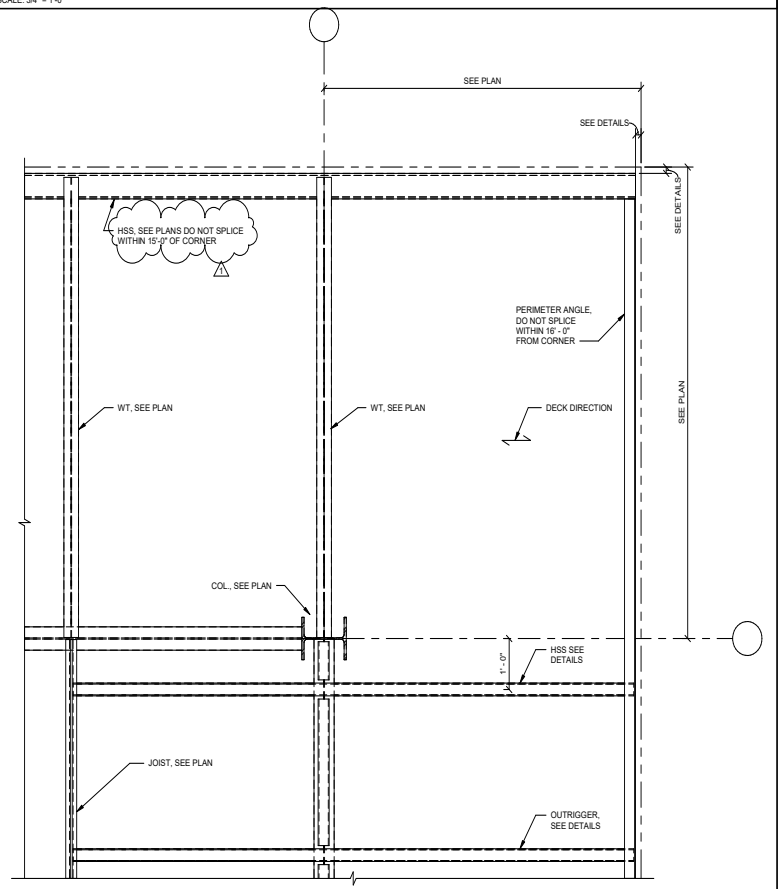

EXTERIOR PERIMETER CORNER ROOF FRAMING DETAIL

4

SCALE: 3/4" = 1'-0"

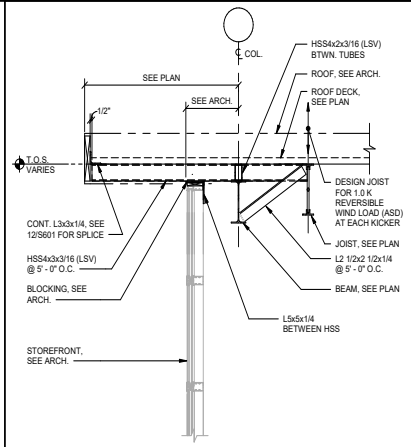

ROOF FRAMING DETAIL

7

SCALE: 3/4" = 1'-0"

4.1627

PROFESSIONAL SEAL

Matrix Structural Engineers
TBPE Firm Registration No. F-2640

STATE OF TEXAS
JAYNOOL A. KHAYRATTEE
68260
REGISTERED
PROFESSIONAL ENGINEER

01/30/2020

LOGO/CONTACT

MATRIX
STRUCTURAL
ENGINEERS

5177 Richmond Avenue, Suite 670
Houston, TX 77046-2401
Tel: 713.664.0133
Fax: 713.664.1370
MSE - 18135

DESIGN TEAM

Architectural
Martinez Architects

Civil Engineer
Maverick Engineering

Structural
Matrix Structural engineers

MEP
DBR

Landscaping
KDC Associates

FIRE STATION #11

CITY OF MIDLAND
Briarwood Ave & Golden Gate Dr
Midland, TX 79707

PROJECT No: **MA 18017**
DATE: **01/30/2020**

No.	Date	Description
	05/21/19	100% DD
	07/30/19	ISSUE FOR PERMIT
	01/30/20	100% ISSUE FOR BIDDING
1	02/19/20	ADDENDUM 2

ROOF FRAMING DETAILS

S610

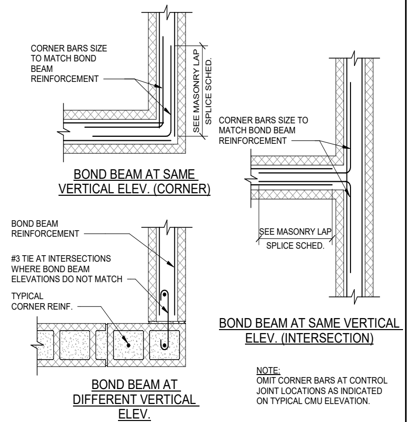

12 TYPICAL CMU BOND BEAM REINFORCEMENT

SCALE: N.T.S.

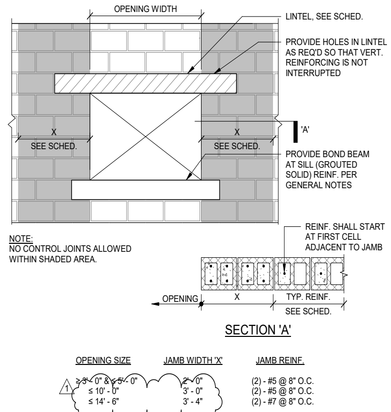

9 CMU JAMB REINFORCING SCHEDULE

SCALE: N.T.S.

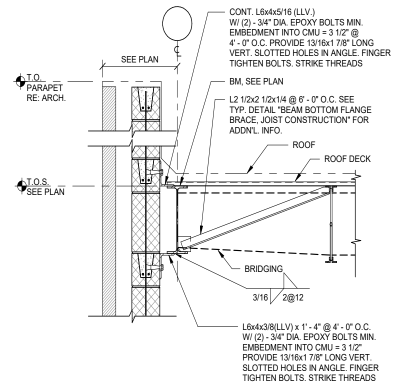

6 TYPICAL DETAIL EXTERIOR EDGE AT CMU (JOIST PARALLEL TO BEAMS)

SCALE: 3/4" = 1'-0"

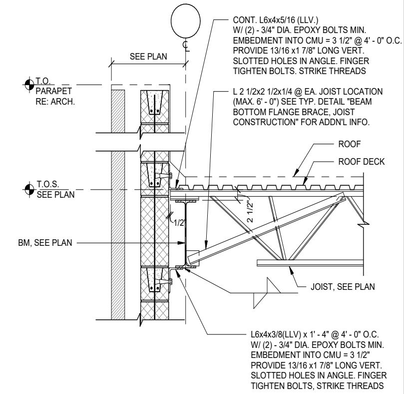

3 TYPICAL DETAIL EXTERIOR EDGE AT CMU (JOIST PERPENDICULAR TO BEAMS)

SCALE: 3/4" = 1'-0"

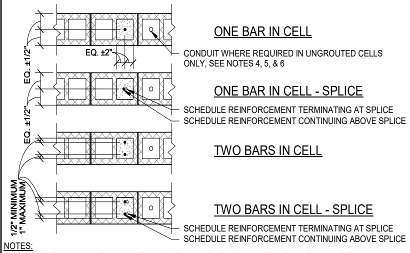

NOTES:
1. REINFORCEMENT MUST BE PLACED USING REINFORCING BAR POSITIONERS THAT LOCATE THE BAR AS SPECIFIED AND PREVENT MOVEMENT OF THE BAR DURING CONSTRUCTION.
2. SPLICED REINFORCEMENT MUST BE A CONTACT LAP SPLICE WITH SPLICED BARS ALIGNED PARALLEL TO THE WALL AS SHOWN.
3. THE ENGINEER MUST BE NOTIFIED PRIOR TO PLACEMENT OF REINFORCEMENT THAT IS REQUIRED TO BE PLACED OUTSIDE OF THE TOLERANCES OF THIS DETAIL SUCH AS TO AVOID INTERFERENCE WITH OTHER REINFORCEMENT, CONDUITS, OR EMBEDDED ITEMS.
4. CONDUIT, PIPES AND SLEEVES SHALL BE NO CLOSER THAN 3 DIAMETERS ON CENTER (USE LARGER DIAMETER WHERE MULTIPLE SIZES ARE USED).
5. ALUMINUM PIPES MAY NOT BE USED UNLESS EFFECTIVELY COATED TO PREVENT CHEMICAL REACTION.
6. PIPES SHALL NOT BE EMBEDDED IN MASONRY WHEN:
   (a) CONTAINING LIQUIDS, GAS, OR VAPORS AT A TEMPERATURE HIGHER THAN 150°F (66°C).
   (b) UNDER PRESSURE IN EXCESS OF 55 PSI (379 KPA).
   (c) CONTAINING WATER OR OTHER LIQUIDS SUBJECT TO FREEZING.

11 TYPICAL DETAIL CMU VERTICAL BAR PLACEMENT

SCALE: N.T.S.

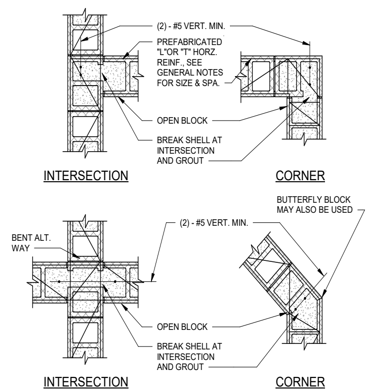

8 CMU WALL INTERSECTIONS

SCALE: N.T.S.

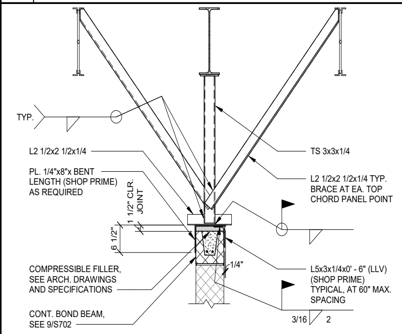

NOTES:
1. THIS DETAIL IS TO BE USED ONLY IF INTERSECTING SUPPORT WALLS EXCEED A SPACING OF 26 TIMES THE NOMINAL THICKNESS.
2. SEE 9/S702 FOR BRACE LOCATION REQUIREMENTS.

5 TYPICAL DETAIL INTERIOR NON-LOAD BEARING CMU WALL TOP CONNECTION TO STEEL BEAM

SCALE: N.T.S.

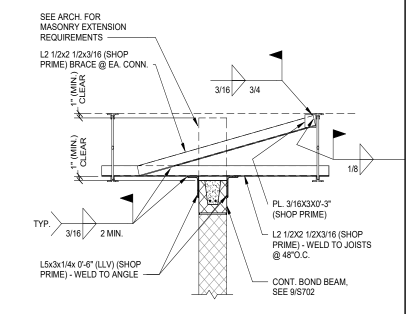

NOTES:
1. THIS DETAIL IS TO BE USED ONLY IF INTERSECTING SUPPORT WALLS EXCEED A SPACING OF 26 TIMES THE NOMINAL THICKNESS.
2. SEE 9/S702 FOR BRACE LOCATION REQUIREMENTS.

2 TYPICAL DETAIL INTERIOR NON-LOAD BEARING CMU WALL TOP CONNECTION PARALLEL TO BAR JOISTS

SCALE: N.T.S.

BAR SIZE	MINIMUM LAP SPLICE LENGTH				REINFORCEMENT OFF CENTER
	REINFORCEMENT AT CENTER OF WALL				
	6" CMU	8" CMU	10" CMU	12" CMU	ANY
3	12	12	12	12	19
4	20	15	12	12	34
5	32[4]	23	18	15	45
6	54[4]	43	34	28	54
7	N/A[5]	60	46	38	63
8	N/A[5]	72	71	57	72

NOTES:
1. TABLE FOR USE WITH GRADE 60 UNCOATED REINF. BARS IN CMU (f'm = 2000 psi)
2. BARS SPLICED BY NON-CONTACT LAP SPLICE SHALL NOT BE SPACED FARTHER APART THAN, ONE-FIFTH THE REQUIRED LAP LENGTH, OR 8".
3. LAP LENGTHS PER IBC 2012.
4. PERMITTED ONLY IF ALL MORTAR FINS ARE REMOVED ROM THE CELL TO BE GROUTED.
5. BAR EXCEEDS MAX. ALLOWABLE SIZE.

10 TYPICAL DETAIL MASONRY TENSION LAP SPLICE (INCHES)

SCALE: N.T.S.

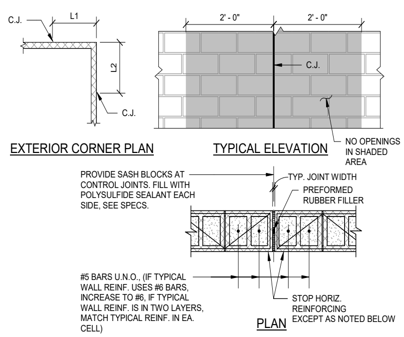

NOTES:
1. CONTRACTOR SHALL OBTAIN ARCHITECT'S APPROVAL OF JOINT LOCATIONS, WHICH SHALL NOT EXCEED THE MINIMUM OF 1.5 TIMES THE WALL HEIGHT OR 20'-0".
2. HORIZONTAL REINFORCING AT FLOOR AND ROOF LINES SHALL BE CONTINUOUS THRU JOINT.
3. CONCRETE BLOCK SHOWN - BRICK SIMILAR.
4. SAWCUT BLOCK OR BRICK AS REQUIRED.
5. AT EXTERIOR CORNERS LOCATE JOINTS SUCH THAT: L1+L2 ≤ 20' - 0", EITHER L1 OR L2 ≤ 10' - 0".

7 MASONRY WALL CONTROL JOINT

SCALE: N.T.S.

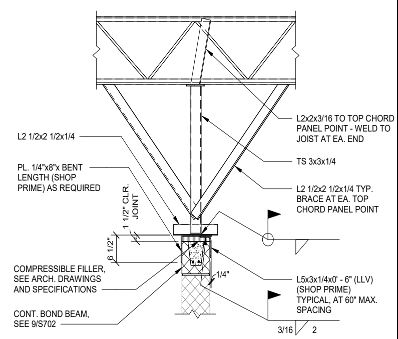

NOTES:
1. THIS DETAIL IS TO BE USED ONLY IF INTERSECTING SUPPORT WALLS EXCEED A SPACING OF 26 TIMES THE NOMINAL THICKNESS.
2. SEE 9/S702 FOR BRACE LOCATION REQUIREMENTS.

4 TYPICAL DETAIL INTERIOR NON-LOAD BEARING CMU WALL TOP CONNECTION PERPENDICULAR TO JOISTS

SCALE: N.T.S.

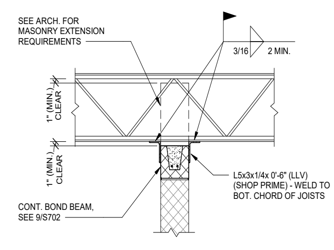

NOTES:
1. THIS DETAIL IS TO BE USED ONLY IF INTERSECTING SUPPORT WALLS EXCEED A SPACING OF 26 TIMES THE NOMINAL THICKNESS.
2. SEE 9/S702 FOR BRACE LOCATION REQUIREMENTS.

1 TYPICAL DETAIL INTERIOR NON-LOAD BEARING CMU WALL TOP CONNECTION PERPENDICULAR TO BAR JOISTS

SCALE: N.T.S.

4.1628

PROFESSIONAL SEAL
Matrix Structural Engineers
TBPE Firm Registration No. F-2640
STATE OF TEXAS
JAYNOOL A. KHAYRATTEE
66260
PROFESSIONAL ENGINEER
01/30/2020

LOGO/CONTACT

MATRIX STRUCTURAL ENGINEERS
5177 Richmond Avenue, Suite 670
Houston, TX 77046-2401
Tel: 713.664.0130
Fax: 713.664.1370
MSE - 18135

DESIGN TEAM

Architectural
Martinez Architects

Civil Engineer
Maverick Engineering

Structural
Matrix Structural engineers

MEP
DBR

Landscaping
KDC Associates

FIRE STATION #11

CITY OF MIDLAND

Briarwood Ave & Golden Gate Dr
Midland, TX 79707

PROJECT No: MA 18017
DATE: 01/30/2020

No.	Date	Description
	05/21/19	100% DD
	07/30/19	ISSUE FOR PERMIT
	01/30/20	100% ISSUE FOR BIDDING
1	02/19/20	ADDENDUM 2

MASONRY DETAILS

S701

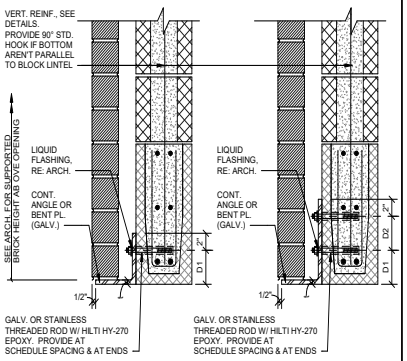

TYPE 1 SCHEDULE					
MAX HEIGHT OF SUPPORTED BRICK	ANGLE	THREADED ROD			
	t	D1	DIA.	EMBEDMENT	SPACING
3'-0"	1/4"	4"	3/8"	3 3/8"	3'-0"
5'-0"	1/4"	4"	1/2"	4 1/2"	3'-0"
8'-0"	5/16"	5"	1/2"	4 1/2"	2'-6"
10'-0"	5/16"	5"	5/8"	5 5/8"	2'-0"
12'-0"	5/16"	5"	5/8"	5 5/8"	1'-4"

TYPE 2 SCHEDULE						
MAX HEIGHT OF SUPPORTED BRICK	ANGLE	THREADED ROD				
	t	D1	D2	DIA.	EMBEDMENT	SPACING
10'-0"	5/16"	4"	4"	3/8"	3 3/8"	3'-0"
12'-0"	3/8"	4"	4"	1/2"	4 1/2"	3'-0"
15'-0"	3/8"	4"	4"	1/2"	4 1/2"	2'-6"
20'-0"	3/8"	4"	4"	5/8"	5 5/8"	2'-0"
25'-0"	3/8"	5"	4"	5/8"	5 5/8"	2'-0"
30'-0"	3/8"	5"	4"	5/8"	6 3/4"	1'-4"
35'-0"	7/16"	5"	4"	5/8"	6 3/4"	1'-4"

NOTES:
1. WHERE TWO SOLUTIONS ARE PROVIDED FOR A GIVEN HEIGHT, CONTRACTOR MAY CHOOSE BETWEEN TYPE 1 & TYPE 2.
2. MAX. HEIGHT OF SUPORTED BRICK SHALL BE FROM TOP OF OPENING TO TOP OF WALL UNLESS ANOTHER OPENING OF GHREATER OR EQUAL WIDTH IS PROVIDED ABOVE THE OPENING.
3. SEE TYPICAL DETAIL " ANGLE OR BENT PLATE SUBSTITUTION FOR OPTIONAL ALTERNATES.

TYPICAL DETAIL
SHELF ANGLE AT CMU

6 SCALE: 1 1/2" = 1'-0"

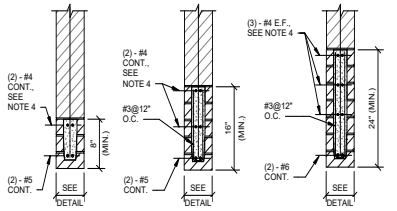

FOR OPENING LESS THAN 5' - 0" WIDE | FOR OPENING 5' - 0" TO 8' - 0" WIDE | FOR OPENING OVER 8' - 0" UP TO 14' - 6" WIDE

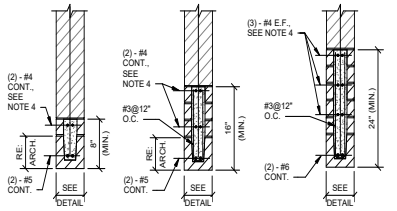

TYPICAL SOLDIER COURSE FOR OPENING LESS THAN 5' - 0" WIDE | TYPICAL SOLDIER COURSE FOR OPENING 5' - 0" T0 TO 8' - 0" WIDE | TYPICAL SOLDIER COURSE FOR OPENING FOR OPENING OVER 8' - 0" UP TO 14' - 6" WIDE

NOTES:
1. SEE ARCH. DRAWINGS FOR SIZE AND LOCATION OF OPENINGS.
2. PROVIDE 1" OF BEARING @ EACH JAMB FOR EACH FOOT OF CLEAR SPAN BUT NOT LESS THAN 8". REINF. SHALL PROJECT A MIN. OF 6" ONTO THE BEARING CMU.
3. BOND BEAMS SHALL BE FULLY GROUTED (2500 PSI @ 28 DAYS).
4. THE #4 BARS ARE ONLY REQUIRED AT EXTERIOR CMU WALLS.

TYPICAL DETAIL
BLOCK LINTEL AT CLAY MASONRY

2 SCALE:NTS

THROUGH BOLT AT CANTILEVER		
CANTILEVER LENGTH	MAX. CONN. SPACING	THROUGH BOLT DIA.
5'-0"	12'-0"	3/8"
	15'-0"	1/2"
8'-0"	8'-0"	1/2"
	12'-0"	5/8"
10'-0"	8'-0"	5/8"
	11'-0"	3/4"

THREADED ROD W/ HY-270 AT CANTILEVER			
CANTILEVER LENGTH	MAX. CONN. SPACING	THREADED ROD	
		DIA.	EMBEDMENT
3'-0"	5'-0"	3/8"	3 3/8"
	12'-0"	3/8"	3 3/8"
5'-0"	5'-0"	1/2"	4 1/2"
	8'-0"	5/8"	5 5/8
	10'-0"	3/4"	6 3/4"

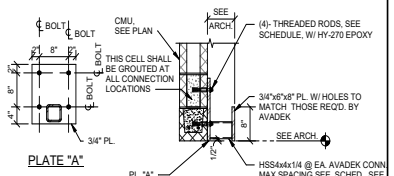

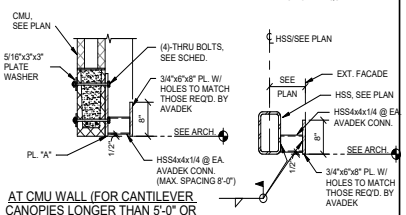

NOTE:
CONCTRACTOR SHALL CONFIRM SPACING FROM CANOPY SUPPLIER PRIOR TO FABRICATION & SUBMIT SHOP SRAWINSS FOR APPROVAL.

TYPICAL DETAIL
AT AVADEK CANOPY CONNECTION

8 SCALE: 3/4" = 1'-0"

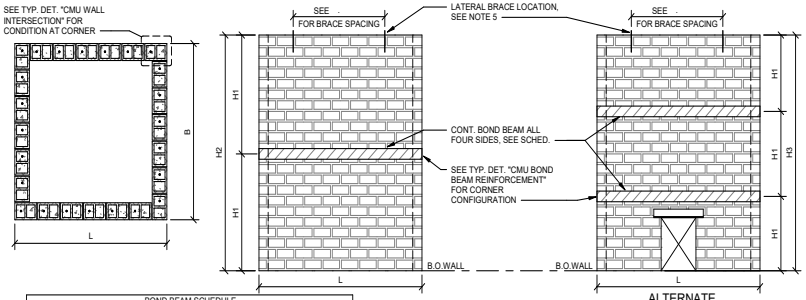

BOND BEAM SCHEDULE						
L OR B	6" WALL		8" WALL		12" WALL	
	BEAM DEPTH	REINF.	BEAM DEPTH	REINF.	BEAM DEPTH	REINF.
8'	8"	(2)-#5B	8"	(2)-#5B	8"	(2)-#5B
10'	8"	(2)-#5B (2)-#5T	8"	(2)-#5B	8"	(2)-#5B
15'	16"	(2)-#5B (2)-#5M (2)-#5T	8"	(2)-#5B (2)-#5T	8"	(2)-#5B
18'	N/A	N/A	16"	(2)-#5B (2)-#5T	8"	(2)-#5B
24'	N/A	N/A	N/A	N/A	16"	(2)-#5B (2)-#5T

NOTES:
1. WHERE H EXCEEDS MAXIMUM SPECIFIED IN TYPICAL DETAIL " NON-LOAD BEARING INTERIOR CMU WALLS BRACING & REINFORCING STEEL " PROVIDE CONT. BOND BEAM AS SHOWN.
2. WHERE CONT. BOND BEAMS ARE USED, WALLS SHALL BE REINFORCED FOR HEIGHT = H1, OTHERWISE REINFORCE WALLS FOR HEIGHT = H2 OR H3
3. SEE TYP. DET. "BOND BEAM AT CONTROL JOINTS" WHERE CONTROL JOINTS INTERSECT BOND BEAM. BOND BEAM SHALL BE TREATED AS A FLOOR (DIAPHRAGM) LEVEL CONDITION
4. H2 SHALL NOT EXCEED 32'-0", H3 SHALL NOT EXCEED 48'-0".
5. IN LIEU OF INTERIOR BRACES AT THE TOP OF WALL CONTRACTOR MAY PROVIDE A BOND BEAM AT THE TOP OF WALL SIZED & REINFORCED PER THE SCHEDULE SHOWN.

TYPICAL DETAIL
TALL RECTANGULAR INTERIOR NON-LOAD BEARING CMU WALL BRACING

5 SCALE: 3/4" = 1'-0"

PROFESSIONAL SEAL
Matrix Structural Engineers
TBPE Firm Registration No. F-2640
JAYNOOL A. KHAYRATTEE
68260
01/30/2020

LOGO/CONTACT
MATRIX STRUCTURAL ENGINEERS
5177 Richmond Avenue, Suite 670
Houston, TX 77056-2401
Tel: 713.664.0133
Fax: 713.664.1370
MSE - 18135

DESIGN TEAM

Architectural
Martinez Architects

Civil Engineer
Maverick Engineering

Structural
Matrix Structural engineers

MEP
DBR

Landscaping
KDC Associates

FIRE STATION #11
CITY OF MIDLAND
Briarwood Ave & Golden Gate Dr
Midland, TX 79707

PROJECT No: **MA 18017**
DATE: **01/30/2020**

No.	Date	Description
	05/21/19	100% DD
	07/30/19	ISSUE FOR PERMIT
	01/30/20	100% ISSUE FOR BIDDING
1	02/19/20	ADDENDUM 2

MASONRY DETAILS

S703

4.1629

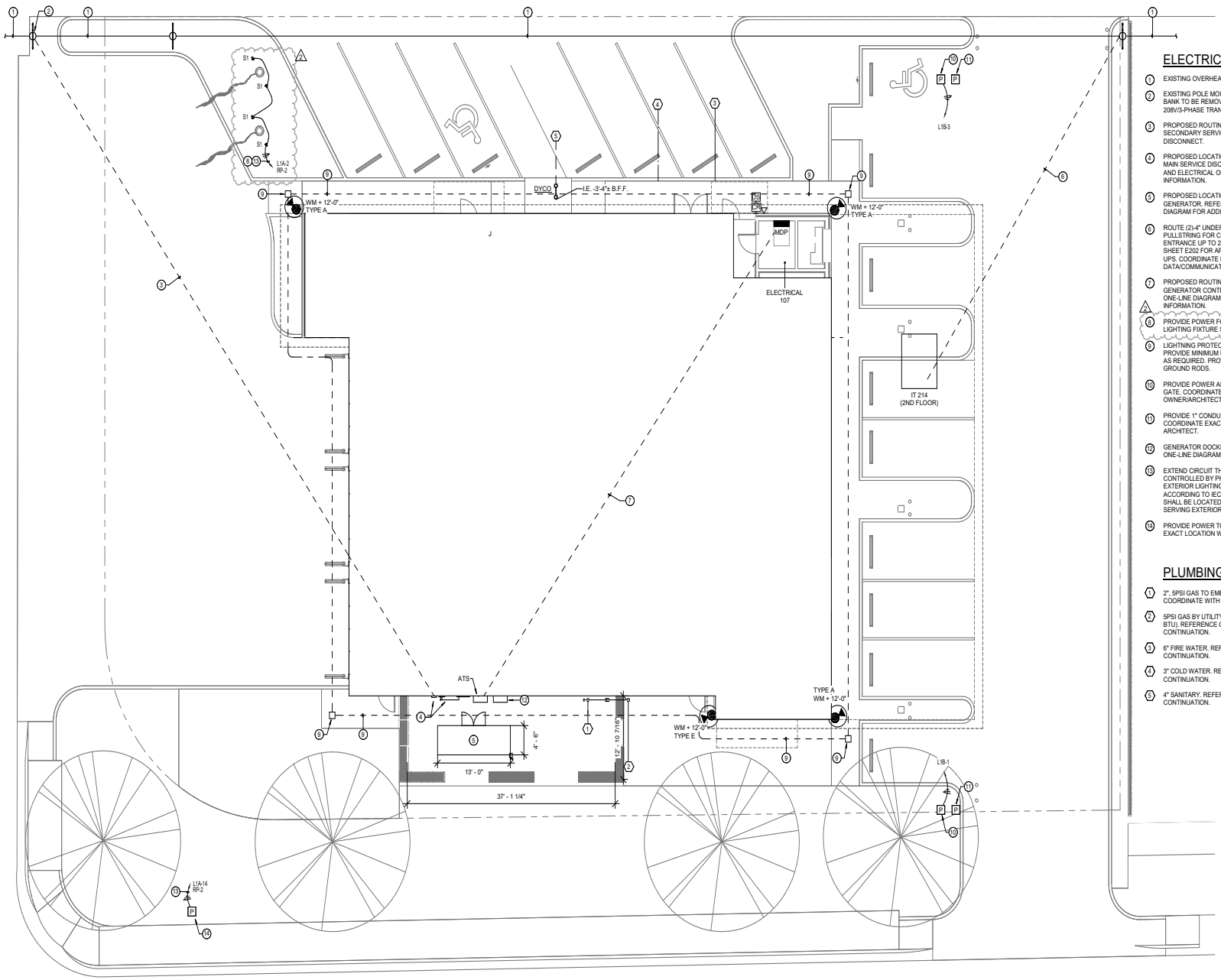

ELECTRICAL KEYED NOTES

1. EXISTING OVERHEAD ELECTRICAL PRIMARY.
2. EXISTING POLE MOUNTED SERVICE TRANSFORMER BANK TO BE REMOVED AND REPLACED WITH NEW 208V/3-PHASE TRANSFORMER BANK.
3. PROPOSED ROUTING OF NEW UNDERGROUND SECONDARY SERVICE LAERAL TO METER/MAIN SERVICE DISCONNECT.
4. PROPOSED LOCATION OF NEW C/T CAN, METER AND MAIN SERVICE DISCONNECT. REFER TO POWER PLAN AND ELECTRICAL ONE-LINE DIAGRAM FOR MORE INFORMATION.
5. PROPOSED LOCATION FOR 200KW NATURAL GAS GENERATOR. REFER TO ELECTRICAL ONE-LINE DIAGRAM FOR ADDITIONAL INFORMATION.
6. ROUTE (2)-4" UNDERGROUND CONDUITS WITH PULLSTRING FOR COMMUNICATION CABLING MAIN ENTRANCE UP TO 2ND FLOOR IT ROOM 214. REFER TO SHEET E202 FOR APPROXIMATE LOCATION OF STUB-UPS. COORDINATE EXACT LOCATION WITH DATA/COMMUNICATION EQUIPMENT PROVIDER.
7. PROPOSED ROUTING OF EMERGENCY FEEDER AND GENERATOR CONTROL WIRING. REFER TO ELECTRICAL ONE-LINE DIAGRAM ON SHEET E401 FOR ADDITIONAL INFORMATION.
8. PROVIDE POWER FOR FLAGPOLE LIGHTING. REFER TO LIGHTING FIXTURE SCHEDULE FOR FIXTURE TYPE.
9. LIGHTNING PROTECTION UNDERGROUND LOOP. PROVIDE MINIMUM NUMBER OF ADDITIONAL GROUNDS AS REQUIRED. PROVIDE GROUND TEST WELLS FOR ALL GROUND RODS.
10. PROVIDE POWER AND DATA CONDUIT FOR SECURITY GATE. COORDINATE EXACT LOCATION WITH OWNER/ARCHITECT.
11. PROVIDE 1" CONDUIT FOR CARDREADER TO MDF-IT 214 . COORDINATE EXACT LOCATION WITH OWNER/ ARCHITECT.
12. GENERATOR DOCKING STATION. REFER TO ELECTRICAL ONE-LINE DIAGRAM FOR ADDITIONAL INFORMATION.
13. EXTEND CIRCUIT THROUGH LIGHTING RELAY PANEL 'RP' CONTROLLED BY PHOTOCELL AND TIMECLOCK. EXTERIOR LIGHTING SHALL BE PROGRAMMED ACCORDING TO IECC 2015. LIGHTING RELAY PANEL SHALL BE LOCATED NEXT TO ELECTRICAL PANEL SERVING EXTERIOR LIGHTING LOAD.
14. PROVIDE POWER TO MONUMENT SIGN. COORDINATE EXACT LOCATION WITH OWNER/ARCHITECT.

PLUMBING KEYED NOTES

1. 2", 5PSI GAS TO EMERGENCY GENERATOR. COORDINATE WITH ELECTRICAL.
2. 5PSI GAS BY UTILITY COMPANY (TOTAL LOAD 3,501,300 BTU). REFERENCE CIVIL DRAWINGS FOR CONTINUATION.
3. 6" FIRE WATER. REFERENCE CIVIL DRAWINGS FOR CONTINUATION.
4. 3" COLD WATER. REFERENCE CIVIL DRAWINGS FOR CONTINUATION.
5. 4" SANITARY. REFERENCE CIVIL DRAWINGS FOR CONTINUATION.

1 MEP SITE PLAN
MEP101 1/8" = 1'-0"

TRUE NORTH | PROJECT NORTH

DBR
9601 McAllister Freeway, Suite 410
San Antonio, Texas 78216
210.546.0200 p
210.546.0201 f
TBPE Firm Registration No. 2234

DBR Project Number 196023.000

JC	BV	DA	WJ	JC

PROFESSIONAL SEAL

STATE OF TEXAS
M. JACQUELINE CHANG
124987
LICENSED PROFESSIONAL ENGINEER
01/30/2020

LOGO/CONTACT

martinez ARCHITECTS

Martinez Architect, LP
900 Rockmead, Suite 250
Houston, Texas 77339
281.346.7371

DESIGN TEAM

Architectural
Martinez Architects

Civil Engineer
Maverick Engineering

Structural
Matrix Structural engineers

MEP/FP/T
DBR

Landscape Architect
KDC Associates

FIRE STATION #5

CITY OF MIDLAND
2200 W GOLF COURSE RD
MIDLAND, TX 79701

PROJECT No: MA 18017
DATE: 01/30/2020

No.	Date	Description
1	01/30/2020	100% CD
2	02/20/2020	Addendum 02

MEP SITE PLAN

MEP101

4.1630

MECHANICAL KEYED NOTES:

1. PROVIDE ROOF MOUNTED CONDENSING UNIT AS SCHEDULED, AT APPROXIMATE LOCATION SHOWN. ROUTE REFRIGERANT LINES FROM CONDENSING UNIT DOWN THROUGH ROOF TO ASSOCIATED INDOOR UNIT. FILED VERIFY EXACT ROUTING. SIZE LINES PER MANUFACTURER'S RECOMMENDATIONS. RE: DETAILS 1, 2, 4/M602.
2. DRYER EXHAUST UP THROUGH ROOF.
3. GAS FLUE UP THROUGH ROOF.
4. PROVIDE ROOF CAP FOR VEHICLE EXHAUST SYSTEM, PER MANUFACTURER'S RECOMMENDATION.

ELECTRICAL KEYED NOTES:

1. MINI-SPLIT INDOOR EVAPORATOR UNIT SHALL RECEIVE POWER FROM ASSOCIATED ROOFTOP CONDENSING UNIT WITH FIELD SUPPLIED WIRING.

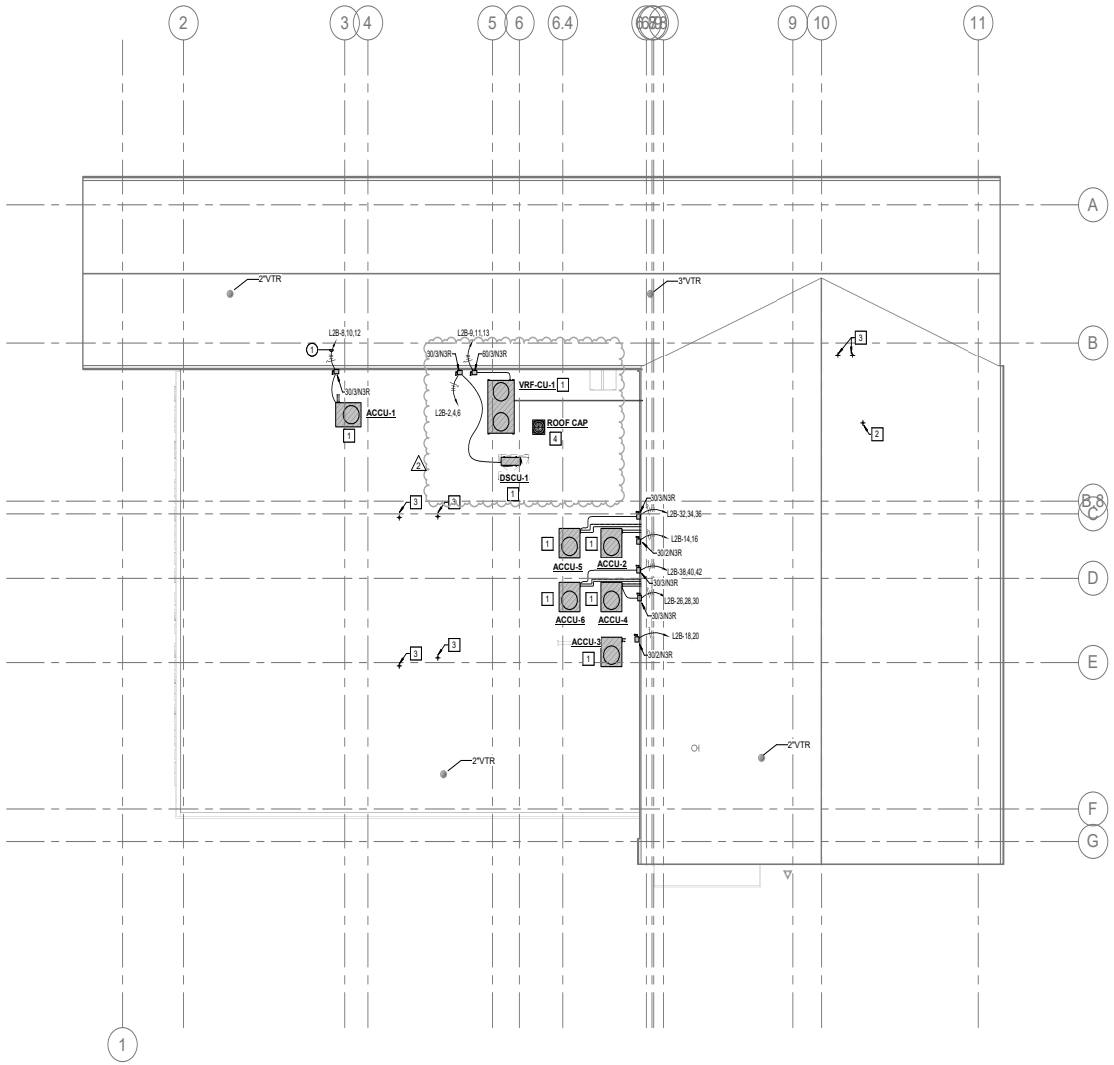

1 MEP ROOF PLAN
MEP102 1/8" = 1'-0"

TRUE NORTH
PROJECT NORTH

DBR
9601 McAllister Freeway, Suite 410
San Antonio, Texas 78216
210.546.0200 p
210.546.0201 f
TBPE Firm Registration No. 2234

DBR Project Number 196023.000

JC	BV	DA	WJ	JC

PROFESSIONAL SEAL

STATE OF TEXAS
M. JACQUELINE CHANG
124987
LICENSED
PROFESSIONAL ENGINEER
02/20/2020

LOGO/CONTACT

martinez ARCHITECTS

Martinez Architect, LP
900 Rockmead, Suite 250
Houston, Texas 77339
281.346.7371

DESIGN TEAM

Architectural
Martinez Architects

Civil Engineer
Maverick Engineering

Structural
Matrix Structural engineers

M/E/P/T
DBR

Landscape Architect
KDC Associates

FIRE STATION #5

CITY OF MIDLAND
2200 W GOLF COURSE RD
MIDLAND, TX 79701

PROJECT No: **MA 18017**
DATE: **01/30/2020**

No.	Date	Description
1	01/30/2020	100% CD
2	02/20/2020	Addendum 02

MEP ROOF PLAN

MEP102

4.1631

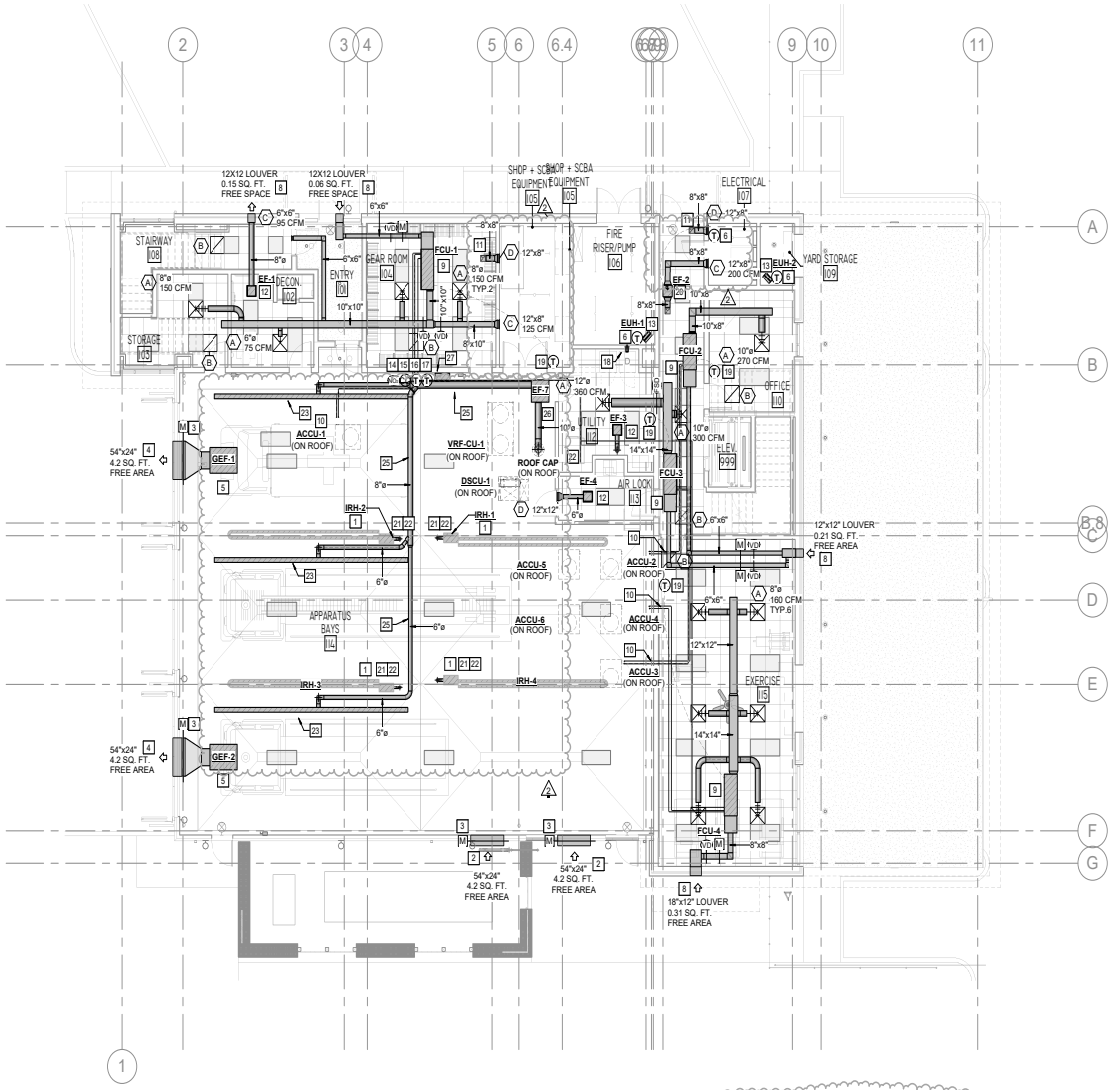

1 LEVEL 1 MECHANICAL PLAN

M211 — 1/8" = 1'-0"

23 MAGNEGRIP SLIDING BALANCER TRACK SYSTEM. INSTALL ALL EQUIPMENT IN STRICT ACCORDANCE WITH MANUFACTURER'S RECOMMENDATIONS. COORDINATE WITH LIGHTING AND HEATER INSTALLATIONS. BOTTOM OF RAILS TO BE INSTALLED AT 12'-4" A.F.F.

24 EXTEND 6"ø DUCT DOWN AND CONNECT TO HORIZONTAL SUCTION RAIL.

25 ROUTE EXHAUST DUCT AS HIGH AS POSSIBLE.

26 PROVIDE INLINE VEHICLE EXHAUST FAN AS SCHEDULED. SUSPEND FROM STRUCTURE ABOVE. EXTEND DISCHARGE DUCT UP THROUGH ROOF TO ROOF CAP. SEAL PENETRATION WEATHER-TIGHT. BOTTOM OF FAN SHALL BE MOUNTED AT 15'-6" A.F.F..

27 PROVIDE MAGNEGRIP CONTROL PANEL ON WALL IN APPROXIMATE LOCATION SHOWN. ALL CONTROL WIRING FROM PANEL TO DUCT MOUNTED SENSOR SHALL BE ROUND IN 3/4" EMT CONDUIT BY MAGNEGRIP APPROVED INSTALLER.

MECHANICAL KEYED NOTES:

1 PROVIDE GAS INFRARED HEATER AT APPROXIMATE LOCATION. MOUNT HEATER AS HIGH AS POSSIBLE BELOW STRUCTURE. COORDINATE EXACT LOCATION WITH ARCHITECT TO AVOID CONFLICT. ROUTE X" ROUND FLUE FROM HEATER UP THROUGH ROOF AND TERMINATE 3'-0" ABOVE ROOF WITH ROOF CAP. SLOPE OF FLUE SHALL NOT BE MORE THAN 45° FROM VERTICAL. RE: DETAILS 15&16/M601.

2 PROVIDE RUSKIN ELF375DX INTAKE AIR LOUVER WITH A FREE AREA AS INDICATED. COORDINATE EXACT LOUVER DIMENSIONS, LOCATION, AND FINISH WITH ARCHITECT. INTAKE LOUVER SHALL BE PROVIDED WITH A MINIMUM OF 18" DEEP PLENUM, FULL SIZE IN WIDTH AND HEIGHT OF LOUVER UNLESS NOTED OTHERWISE. INTAKE LOUVER SHALL BE INSTALLED A MINIMUM OF 10'-0" FROM EXHAUST OUT OF BUILDING. RE: 18/M601.

3 INTERLOCK MOTORIZED DAMPER WITH ASSOCIATED EXHAUST FANS SUCH THAT DAMPER SHALL BE OPEN WHEN FAN IS ENERGIZED AND SHUT WHEN FAN IS DE-ENERGIZED.

4 PROVIDE RUSKIN ELF375DX EXHAUST AIR LOUVER WITH DIMENSIONS AND FREE AREA AS INDICATED. EXHAUST LOUVER SHALL BE PROVIDED WITH A MINIMUM OF 18" DEEP PLENUM, FULL SIZE IN WIDTH AND HEIGHT OF LOUVER UNLESS NOTED OTHERWISE. RE: 17/M601.

5 PROVIDE INLINE EXHAUST FAN AS SCHEDULED. AT APPROXIMATE LOCATION SHOWN. INSTALL PER MANUFACTURER SPECIFICATION. COORDINATE EXACT LOCATION WITH ARCHITECT. PROVIDE TRANSITIONS AS REQUIRED. COVER INLET OF FAN WITH HARDWARE CLOTH. RE: DETAIL 9/M602.

6 LOCATE THERMOSTAT AS SHOWN. MOUNT AT SAME ELEVATION AS LIGHT SWITCHES. COORDINATE EXACT LOCATION WITH ARCHITECT.

7 ROUTE CONDENSATE TO FLOOR DRAIN/TAILPIECE AT LOCATION SHOWN. REFER TO PLUMBING FOR EXACT LOCATION. UNLESS NOTED OTHERWISE, SIZE CONDENSATE PER MANUFACTURER'S RECOMMENDATION. RE: DETAIL 7/M601.

8 PROVIDE RUSKIN ELF375DX INTAKE/EXHAUST AIR LOUVER WITH DIMENSIONS AND FREE AREA AS INDICATED. LOUVER SHALL BE PROVIDED WITH A MINIMUM OF 18" DEEP PLENUM, FULL SIZE IN WIDTH AND HEIGHT OF LOUVER UNLESS NOTED OTHERWISE. RE: 18/M601 FOR INTAKE & 17/M601 FOR EXHAUST.

9 PROVIDE NEW, HORIZONTAL FAN COIL UNIT AS SCHEDULED AT LOCATION SHOWN. SUSPEND FAN COIL UNIT FROM STRUCTURE. PROVIDE FLEXIBLE CONNECT AT UNIT DISCHARGE. PROVIDE ALL CLEARANCES AND ACCESS AS RECOMMENDED BY THE MANUFACTURER. RE: DETAIL 13/M601.

10 ROUTE REFRIGERANT PIPING DOWN THROUGH ROOF TO ASSOCIATED FAN COIL UNIT. SIZE PER MANUFACTURERS RECOMMENDATION. CONTRACTOR TO VERIFY EXACT ROUTING. RE: DETAILS 14/M601& 2,3,4/M604.

11 PROVIDE RETURN AIR BOOT IN LOCATION SHOWN. SIZE AS INDICATED ON PLANS. RE: DETAILS 8, 9, 10/M601.

12 PROVIDE CEILING MOUNTED EXHAUST FAN AS SCHEDULED IN APPROXIMATE LOCATION SHOWN. RE: DETAIL 19/M601.

13 PROVIDE ELECTRIC UNIT HEATER AT APPROXIMATE LOCATION SHOWN. MOUNT HEATER 12" BELOW CEILING OR MAXIMUM MOUNT HEIGHT. FIELD COORDINATE EXACT LOCATION TO AVOID CONFLICTS WITH ADJACENT EQUIPMENT. RE: DETAIL 8/M602.

14 PROVIDE NO2 (NITROGEN DIOXIDE) DETECTOR, HONEYWELL ANALYTICS E3POINT WITH MOTOR STARTER, WITH A BATTERY BACK-UP AND TEST BUTTON AT SAME ELEVATION AS LIGHT SWITCHES. COORDINATE EXACT LOCATION WITH ARCHITECT PRIOR TO CONSTRUCTION TO AVOID CONFLICTS. GEF-1 & GEF-2 SHALL RAMP UP TO MAXIMUM AIRFLOW RATE AND A VISUAL AND AUDIBLE ALARM WILL SIGNAL WHEN THE NO2 DETECTOR DETECTS A CONCENTRATION OF 50 PARTS PER MILLION OF NO2. NO2 DETECTORS SHALL BE INSTALLED IN ACCORDANCE WITH MANUFACTURER'S RECOMMENDATIONS.

15 PROVIDE CO (CARBON MONOXIDE) DETECTOR, HONEYWELL ANALYTICS E3POINT WITH MOTOR STARTER, WITH A BATTERY BACK-UP AND TEST BUTTON AT SAME ELEVATION AS LIGHT SWITCHES. COORDINATE EXACT LOCATION WITH ARCHITECT PRIOR TO CONSTRUCTION TO AVOID CONFLICTS. GEF-1 & GEF-2 SHALL RAMP UP TO MAXIMUM AIRFLOW RATE AND A VISUAL AND AUDIBLE ALARM WILL SIGNAL WHEN THE CO DETECTOR DETECTS A CONCENTRATION OF 50 PARTS PER MILLION (ADJ) OF CO. CO DETECTORS SHALL BE INSTALLED IN ACCORDANCE WITH MANUFACTURER'S RECOMMENDATIONS.

16 PROVIDE WALL MOUNTED APPARATUS BAY EXHAUST CONTROLLER, HONEYWELL ANALYTICS E301C OR EQUAL, AT SAME ELEVATION AS LIGHT SWITCHES. COORDINATE EXACT LOCATION WITH ARCHITECT PRIOR TO CONSTRUCTION TO AVOID CONFLICT. CONTROLLER SHALL MODULATE THE FAN SPEED OF GEF-1 AND GEF-2 FROM MINIMUM TO MAXIMUM SPEED BASED ON SIGNAL FROM CO/NO2 SENSOR OR WHEN TEMPERATURE EXCEEDS 85°F (ADJ). EXHAUST FAN SHALL OPERATE CONTINUOUSLY AT MINIMUM SPEED. UPON DETECTION OF CO OR NO2 CONCENTRATIONS ABOVE ASSOCIATED HIGH LIMITS, THE EXHAUST FANS SHALL OPERATE AT DESIGN MAXIMUM AIRFLOW RATES.

17 TIE ALL GAS INFRARED HEATERS TOGETHER AND LOCATE THERMOSTAT ON WALL AS SHOWN. MOUNT AT SAME ELEVATION AS LIGHT SWITCHES THERMOSTAT SHALL ENERGIZE HEATER TO MAINTAIN TEMPERATURE AT 60°F (ADJUSTABLE).

18 ROUTE RIGID METAL EXHAUST DUCT TO EXHAUST VENT CAP. VENT CAP TO BE AIR KING PWC6R OR ARCHITECT SPECIFIED EQUIVALENT. PROVIDE TRANSITIONS AS REQUIRED. RE: DETAIL 5/M602.

19 LOCATE THERMOSTAT AS SHOWN. THERMOSTAT MODEL HONEYWELL VISION PRO 8000 MOUNT AT SAME ELEVATION AS LIGHT SWITCHES. COORDINATE EXACT LOCATION WITH ARCHITECT.

20 PROVIDE INLINE EXHAUST FAN AS SCHEDULED. DISCHARGE SHALL TERMINATE ABOVE PLENUM. RE: DETAIL 7/M602.

21 ROUTE 4" DIAMETER COMBUSTION AIR INTAKE UP THROUGH ROOF. PROVIDE WITH COMBUSTION AIR INTAKE KIT. INSTALL PER MANUFACTURER'S SPECIFICATIONS. RE: DETAIL 15/M601.

22 ROUTE 4" DIAMETER VENT UP THROUGH ROOF. PROVIDE WITH VENT ADAPTOR. INSTALL PER MANUFACTURER'S SPECIFICATIONS. ROUTE 3/4" CONDENSATE DRAIN FROM CLEAN OUT TO SINK TAIL PIECE. COORDINATE WITH PLUMBING, RE: DETAIL 15&16/M601.

TRUE NORTH / PROJECT NORTH

DBR
9601 McAllister Freeway, Suite 410
San Antonio, Texas 78216
210.546.0200 p
210.546.0201 f
TBPE Firm Registration No. 2234

DBR Project Number 196023.000

JC	BV	DA	WJ	JC

PROFESSIONAL SEAL

STATE OF TEXAS — M. JACQUELINE CHANG — 124987 — LICENSED PROFESSIONAL ENGINEER — 02/20/2020

LOGO/CONTACT

martinez ARCHITECTS
Martinez Architect, LP
900 Rockmead, Suite 250
Houston, Texas 77339
281.346.7371

DESIGN TEAM

Architectural
Martinez Architects

Civil Engineer
Maverick Engineering

Structural
Matrix Structural engineers

MEP/FP/T
DBR

Landscape Architect
KDC Associates

FIRE STATION #5

CITY OF MIDLAND
2200 W GOLF COURSE RD
MIDLAND, TX 79701

PROJECT No: MA 18017
DATE: 01/30/2020

No.	Date	Description
1	01/30/2020	100% CD
2	02/20/2020	Addendum 02

LEVEL 1 MECHANICAL PLAN

M211

4.1632

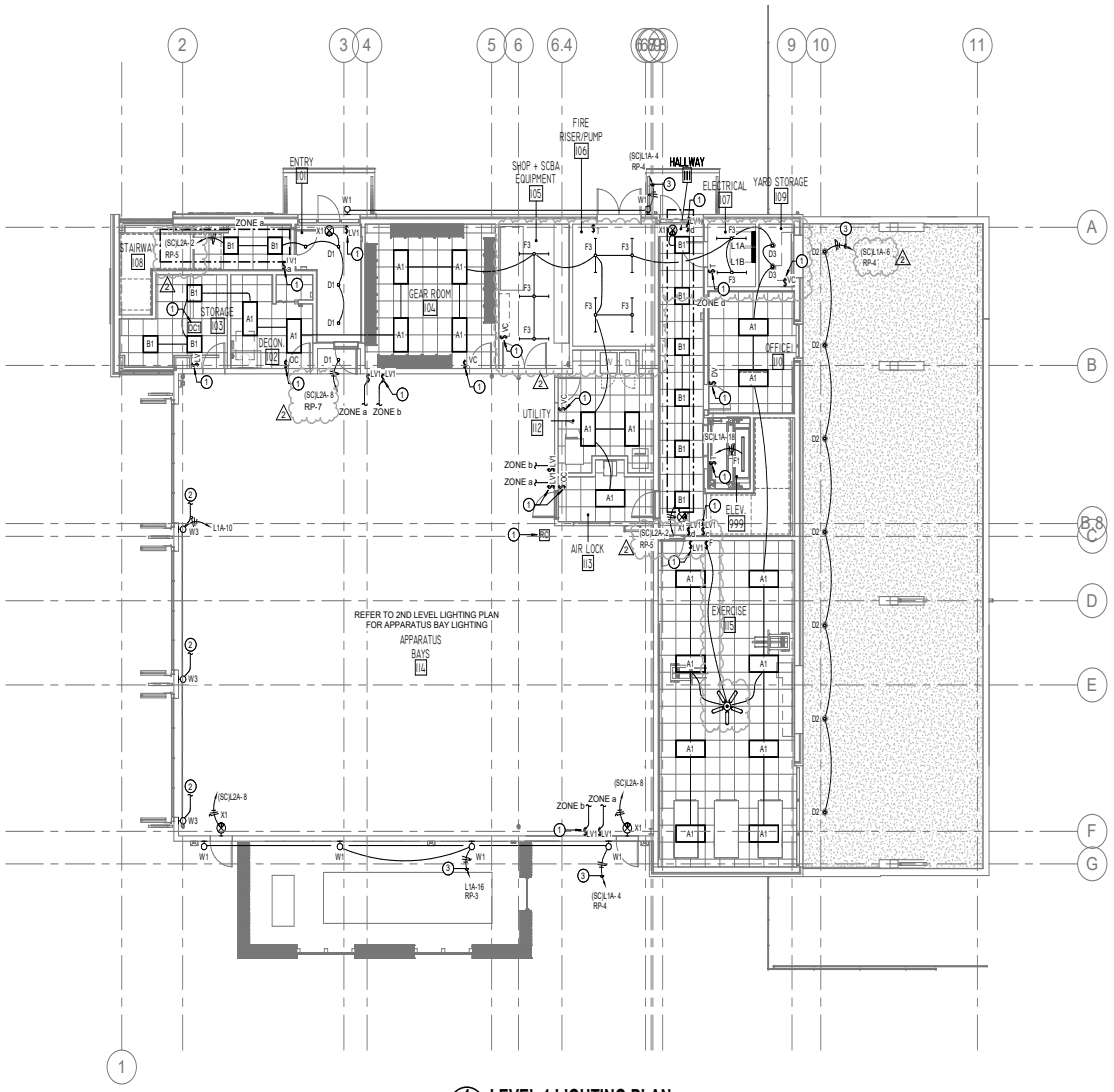

1 E101 **LEVEL 1 LIGHTING PLAN**

1/8" = 1'-0"

LIGHTING GENERAL NOTES

A. ALL CEILING MOUNTED DEVICES LOCATED IN LAY-IN CEILINGS SHALL BE CENTERED IN THE CEILING TILE.

B. MULTIPLE SWITCHES SHOWN TOGETHER SHALL BE GANGED TOGETHER UNDER A COMMON COVER PLATE.

C. CONTRACTOR SHALL INDICATE LIGHTING CIRCUIT SERVING EACH SWITCH BY PROVIDING TYPE WRITTEN LABELING LOCATED ON INSIDE FACE OF EACH SWITCH COVER PLATE.

D. SPRINKLER CONTRACTOR SHALL COORDINATE SPRINKLER HEAD LOCATIONS WITH CEILING MOUNTED LIGHTING FIXTURES.

E. LOWER CASE CHARACTER ADJACENT TO SWITCH AND/OR LIGHTING FIXTURE INDICATES SWITCHING GROUP.

F. ELECTRICAL CONTRACTOR SHALL COORDINATE INSTALLATION OF ALL RECESSED LIGHTING FIXTURES WITH THE CEILING INSTALLER, TO PROVIDE FIRE PROTECTION AS DESCRIBED IN THE UL FIRE RESISTANCE DIRECTORY STANDARD APPROPRIATED TO THE CEILING ASSEMBLY INSTALLED AND FIRE RATING REQUIRE. REFER TO THE ARCHITECTURAL DRAWINGS FOR UL DESIGN NUMBER. REFER TO DETAIL 11 SHEET E302.

G. REFER TO LIGHTING CONTROL DEVICE SCHEDULE ON SHEET E501 FOR CONTROLLABILITY AND MANUFACTURER/PRODUCT # INFORMATION ON ALL LIGHTING CONTROL DEVICES.

LIGHTING KEYED NOTES

1. REFER TO SHEET E501 FOR LIGHTING CONTROL DEVICE INFORMATION.
2. W3 LIGHTING FIXTURE SHALL FLASH WHILE ASSOCIATED APPARATUS BAY DOOR IS IN OPERATION. PROVIDE CONTROL RELAY AND TIE INTO ASSOCIATED APPARATUS BAY DOOR CONTROLLER.
3. EXTEND CIRCUIT THROUGH LIGHTING RELAY PANEL CONTROLLED BY PHOTOCELL AND TIMECLOCK. LIGHTING RELAY PANEL SHALL BE LOCATED NEXT TO ELECTRICAL PANEL SERVING LOAD.

TRUE NORTH

PROJECT NORTH

DBR
9601 McAllister Freeway, Suite 410
San Antonio, Texas 78216
210.546.0200 p
210.546.0201 f
TBPE Firm Registration No. 2234

DBR Project Number 196023.000

JC	BV	DA	WJ	JC

PROFESSIONAL SEAL

STATE OF TEXAS
M. JACQUELINE CHANG
124987
LICENSED PROFESSIONAL ENGINEER
01/30/2020

LOGO/CONTACT

martinez ARCHITECTS

Martinez Architect, LP
900 Rockmead, Suite 250
Houston, Texas 77339
281.346.7371

DESIGN TEAM

Architectural
Martinez Architects

Civil Engineer
Maverick Engineering

Structural
Matrix Structural engineers

MIE/P/T
DBR

Landscape Architect
KDC Associates

FIRE STATION #5

CITY OF MIDLAND
2200 W GOLF COURSE RD
MIDLAND, TX 79701

PROJECT No: **MA 18017**
DATE: **01/30/2020**

No.	Date	Description
1	01/30/2020	100% CD
2	02/20/2020	Addendum 02

LEVEL 1
LIGHTING PLAN

E101

4.1633

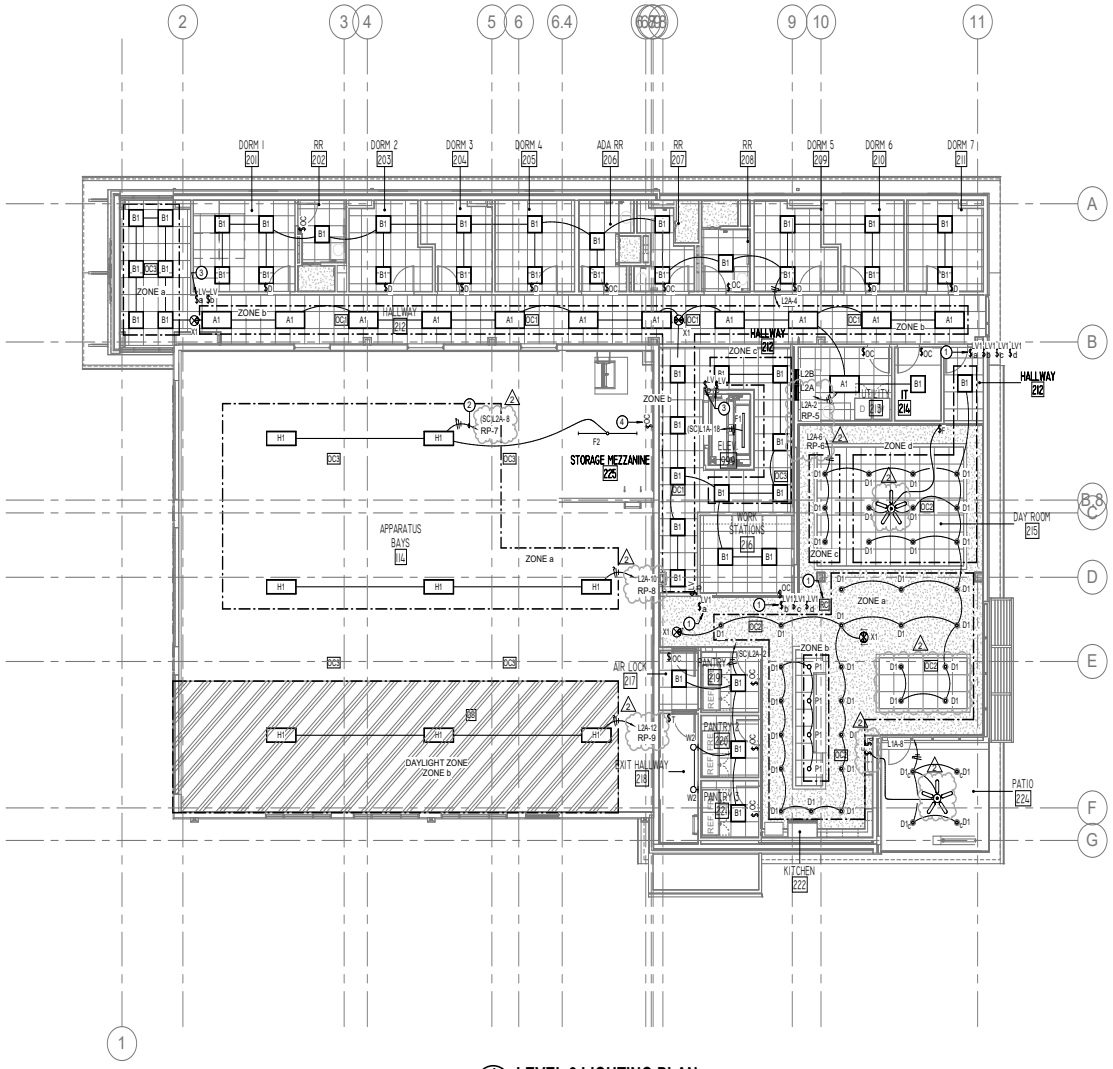

1 E102 **LEVEL 2 LIGHTING PLAN**
1/8" = 1'-0"

LIGHTING GENERAL NOTES

A. ALL CEILING MOUNTED DEVICES LOCATED IN LAY-IN CEILINGS SHALL BE CENTERED IN THE CEILING TILE.

B. MULTIPLE SWITCHES SHOWN TOGETHER SHALL BE GANGED TOGETHER UNDER A COMMON COVER PLATE.

C. CONTRACTOR SHALL INDICATE LIGHTING CIRCUIT SERVING EACH SWITCH BY PROVIDING TYPE WRITTEN LABELING LOCATED ON INSIDE FACE OF EACH SWITCH COVER PLATE.

D. SPRINKLER CONTRACTOR SHALL COORDINATE SPRINKLER HEAD LOCATIONS WITH CEILING MOUNTED LIGHTING FIXTURES.

E. LOWER CASE CHARACTER ADJACENT TO SWITCH AND/OR LIGHTING FIXTURE INDICATES SWITCHING GROUP.

F. ELECTRICAL CONTRACTOR SHALL COORDINATE INSTALLATION OF ALL RECESSED LIGHTING FIXTURES WITH THE CEILING INSTALLER, TO PROVIDE FIRE PROTECTION AS DESCRIBED IN THE UL FIRE RESISTANCE DIRECTORY STANDARD APPROPRIATED TO THE CEILING ASSEMBLY INSTALLED AND FIRE RATING REQUIRE. REFER TO THE ARCHITECTURAL DRAWINGS FOR UL DESIGN NUMBER. REFER TO DETAIL 11 SHEET E302.

G. REFER TO LIGHTING CONTROL DEVICE SCHEDULE ON SHEET E501 FOR CONTROLLABILITY AND MANUFACTURER/PRODUCT # INFORMATION ON ALL LIGHTING CONTROL DEVICES.

LIGHTING KEYED NOTES

1. PROVIDE ROOM CONTROLLER LIGHTING CONTROL SYSTEM FOR KITCHEN/DINING/DAY ROOM LIGHTING CONTROL. REFER TO LIGHTING CONTROL DEVICE SCHEDULE FOR MORE INFORMATION.
2. REFER TO LEVEL 1 LIGHTING PLAN FOR APPARATUS BAY LIGHTING CONTROL AND CIRCUIT CONTINUATION.
3. REFER TO LEVEL 1 LIGHTING PLAN FOR LIGHTING CONTROL CONTINUATION.
4. LIGHT CONTROL FOR MEZZANINE STORAGE STRIP FIXTURE. REFER TO LIGHTING CONTROL DEVICE SCHEDULE FOR MORE INFORMATION.

TRUE NORTH / PROJECT NORTH

DBR
9601 McAllister Freeway, Suite 410
San Antonio, Texas 78216
210.546.0200 p
210.546.0201 f
TBPE Firm Registration No. 2234

DBR Project Number 196023.000

JC	BV	DA	WJ	JC

PROFESSIONAL SEAL

STATE OF TEXAS
M. JACQUELINE CHANG
124987
LICENSED PROFESSIONAL ENGINEER
04/30/2020

LOGO/CONTACT

martinez ARCHITECTS

Martinez Architect, LP
900 Rockmead, Suite 250
Houston, Texas 77339
281.346.7371

DESIGN TEAM

Architectural
Martinez Architects

Civil Engineer
Maverick Engineering

Structural
Matrix Structural engineers

MIE/P/T
DBR

Landscape Architect
KDC Associates

FIRE STATION #5

CITY OF MIDLAND
2200 W GOLF COURSE RD
MIDLAND, TX 79701

PROJECT No: **MA 18017**
DATE: **01/30/2020**

No.	Date	Description
1	01/30/2020	100% CD
2	02/20/2020	Addendum 02

LEVEL 2 & 3
LIGHTING PLAN

E102

4.1634

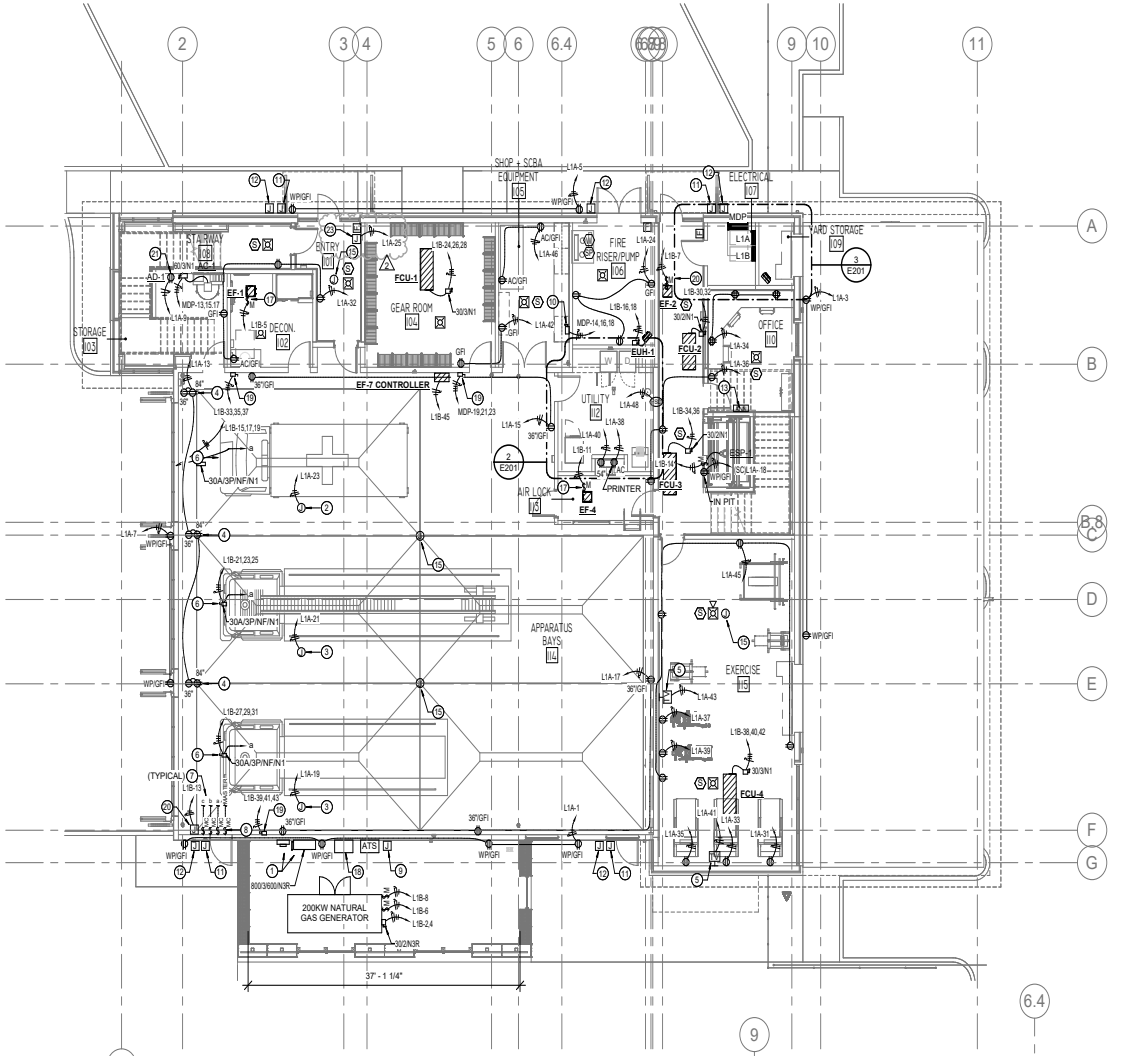

1 LEVEL 1 POWER PLAN
E201 — 1/8" = 1'-0"

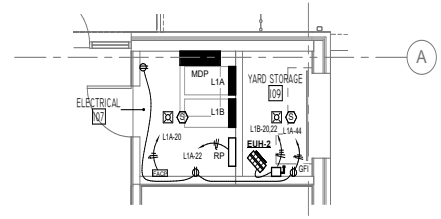

3 ENLARGED POWER PLAN - ELECTRICAL 107
E201 — 1/4" = 1'-0"

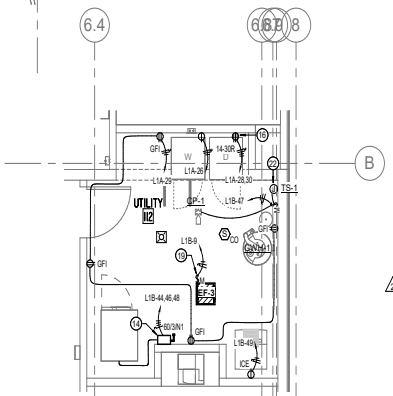

2 ENLARGED POWER PLAN - UTILITY 112
E201 — 1/4" = 1'-0"

ELECTRICAL GENERAL NOTES

A. ELECTRICAL CONTRACTOR SHALL GROUP HOMERUNS WITH THREE HOTS (A,B, AND C PHASE), AND #10 NEUTRAL TO PROVIDE MULTI-WIRE BRANCH CIRCUITS. NO MORE THAN 1 MULTI-WIRE HOMERUNS PER CONDUIT. CONTRACTOR SHALL PROVIDE HANDLE TIES MANUFACTURED BY THE SWITCH GEAR SUPPLIER ON ALL MULTI-WIRE CIRCUITS TO MEET THE REQUIREMENTS OF ARTICLE 210.4(B) OF THE 2017 NEC. AT THE CONTRACTOR'S OPTION, TWO AND THREE POLE BREAKERS MAY BE USED.

B. CONTRACTOR SHALL VERIFY DEVICE LOCATIONS WITH ARCHITECT PRIOR TO ROUGH-IN. REFER TO ARCHITECTURAL CASEWORK AND MILLWORK ELEVATIONS.

C. ELECTRICAL CONTRACTOR SHALL PROVIDE CONDUIT, OUTLET BOXES, JUNCTION BOXES FOR ALL TECHNOLOGY DEVICE OUTLETS. REFER TO DIVISION 26 SPECIFICATIONS AND TECHNOLOGY DRAWINGS FOR ALL WORK REQUIRED.

D. HVAC AND PLUMBING EQUIPMENT MAY DIFFER FROM LOCATIONS AS SHOWN ON ELECTRICAL DRAWINGS. COORDINATE EXACT LOCATIONS WITH MECHANICAL AND PLUMBING CONTRACTOR.

E. ALL SINGLE-PHASE RECEPTACLES RATED 150 VOLTS TO GROUND, OR LESS, 50 AMPERES OR LESS AND THREE-PHASE RECEPTACLES RATED 150 VOLTS TO GROUND OR LESS, 100A OR LESS, IN FOOD SERVICE AREAS, BATHROOMS, ROOFTOPS, OUTDOORS, INDOOR WET LOCATIONS, LOCKER ROOMS, OR CRAWL SPACES SHALL BE GFCI, IN ACCORDANCE WITH NEC 210.8(B).

F. ELECTRICAL CONTRACTOR TO COORDINATE WITH PURVIS INSTALLER FOR ALL REQUIREMENTS PRIOR TO ROUGH-IN.

G. ELECTRICAL CONTRACTOR SHALL PROVIDE CONTACTOR FOR SHUTOFF TO ELECTRIC OVEN. MUST BE TIED INTO PURVIS SYSTEM. MANUAL RESET FOR GAS AND ELECTRICAL SHUTOFFS BY ELECTRICAL CONTRACTOR.

H. ALL EXTERIOR EQUIPMENT (SPECIFICALLY THE GENERATOR AND MECHANICAL EQUIPMENT) MUST MEET THE TEXAS DEPARTMENT OF INSURANCE WIND LOAD REQUIREMENTS.

ELECTRICAL KEYED NOTES

1. PROPOSED LOCATION FOR ELECTRICAL SERVICE EQUIPMENT. FIELD COORDINATE INSTALLATION WITH POWER COMPANY, REFER TO ONE LINE DIAGRAM ON SHEET E401 FOR ADDITIONAL INFORMATION.
2. PROVIDE RETRACTABLE POWER CORD REEL WITH 120V 20A RECEPTACLE, FURNISHED WITH PIVOT BASE. PROVIDE DUPLEX RECEPTACLE AT CORD REEL BASE. FIELD COORDINATE EXACT LOCATION, CABLE LENGTH AND ADDITIONAL REQUIREMENTS WITH ARCHITECT/OWNER PRIOR TO ROUGH-IN. PROVIDE WITH QUICK RELEASE PLUG. RE 4/E602.
3. PROVIDE RETRACTABLE POWER CORD REEL WITH 120V 20A RECEPTACLE, FURNISHED WITH 120V 20A RECEPTACLE. PROVIDE DUPLEX RECEPTACLE AT CORD PROVIDE DUPLEX RECEPTACLE AT CORD REEL BASE. FIELD COORDINATE EXACT LOCATION, CABLE LENGTH AND ADDITIONAL REQUIREMENTS WITH ARCHITECT/OWNER PRIOR TO ROUGH-IN. PROVIDE WITH QUICK RELEASE PLUG. RE 4/E602.
4. RECEPTACLES FOR TURN OUT TIMER. COORDINATE MOUNTING HEIGHTS AND ALL REQUIREMENTS WITH OWNER PRIOR TO ROUGH IN.
5. POWER AND A/V OUTLETS FOR WALL MOUNTED TELEVISION. FIELD COORDINATE EXACT LOCATION WITH ARCHITECT/OWNER PRIOR TO ROUGH-IN. COORDINATE PURVIS SYSTEM WITH TECHNOLOGY DRAWINGS.
6. PROVIDE POWER CONNECTION TO BAY DOOR MOTOR CONTROLLER. FIELD COORDINATE EXACT LOCATION, CONTROL WIRING QUANTITIES AND ADDITIONAL REQUIREMENTS WITH DOOR INSTALLER PRIOR TO ROUGH-IN. ROUTE (1) 3/4" CONDUIT WITH CONTROL WIRE TO ASSOCIATED OPEN/CLOSE SWITCH.
7. PROVIDE OPEN/CLOSE CONTROL SWITCH FOR MOTORIZED FOLDING DOOR. FIELD COORDINATE EXACT LOCATION WITH ARCHITECT/OWNER PRIOR TO ROUGH-IN.
8. PROVIDE OPEN/CLOSE MASTER CONTROL SWITCH. COORDINATE EXACT LOCATION WITH ARCHITECT AND DOOR INSTALLER PRIOR TO ROUGH-IN. SWITCH SHALL CONTROL ALL 3 FRONT FOLDING DOORS.
9. 120V JUNCTION BOX CONNECTION FOR IRRIGATION CONTROLLER. FIELD COORDINATE EXACT LOCATION, MOUNTING HEIGHT AND ADDITIONAL REQUIREMENTS WITH LANDSCAPE CONTRACTOR PRIOR TO ROUGH-IN.
10. PROVIDE 100A/3P/NF/N1 SAFETY DISCONNECT RATED FOR 20 HP MINIMUM FOR CASCADE COMPRESSOR. FIELD COORDINATE EXACT LOCATION AND ADDITIONAL EQUIPMENT REQUIREMENTS WITH INSTALLER PRIOR PLACEMENT.
11. PROVIDE BACK BOX FOR WALL MOUNTED CALL BUTTON. FIELD COORDINATE EXACT LOCATION AND ADDITIONAL REQUIREMENTS WITH TECHNOLOGY CONTRACTOR AND OWNER PRIOR TO ROUGH-IN. ROUTE (1) 1" CONDUIT WITH PULLSTRING FROM BACK BOX TO UP ABOVE CEILING. PROVIDE WEATHER PROOF BACK-BOXES FOR OUTDOOR DEVICES.
12. PROVIDE 120V JUNCTION BOX CONNECTION FOR CARD READER. FIELD COORDINATE EXACT LOCATION WITH ARCHITECT/ OWNER.
13. GENERATOR REMOTE ANNUNCIATOR. COORDINATE EXACT LOCATION WITH OWNER BEFORE ROUGH-IN.
14. 60A/3P/NF/N1 SAFETY DISCONNECT FOR EXTRACTOR WASHER, FIELD COORDINATE EXACT LOCATION AND ADDITIONAL REQUIREMENTS WITH EQUIPMENT INSTALLER PRIOR TO ROUGH-IN. SAFETY DISCONNECT SHALL BE RATED FOR 5 H.P. MINIMUM.
15. PROVIDE JUNCTION BOX FOR ALERTING SYSTEM DEVICE PROVIDED BY OTHERS. PROVIDE CONDUIT TO ABOVE ACCESSIBLE CEILING AREA. COORDINATE WITH ARCHITECT AND OWNER PRIOR TO ROUGH-IN.
16. VERIFY EXACT NEMA CONFIGURATION WITH EQUIPMENT MANUFACTURER PRIOR TO INSTALLATION.
17. EXTEND CIRCUIT TO INTEGRAL FAN -MOUNTED MOTOR RATED TOGGLE SWITCH. FAN TO BE INTERLOCKED WITH DEDICATED SWITCH/THERMOSTAT IN ASSOCIATED ROOM.
18. GENERATOR DOCKING STATION. REFER TO ELECTRICAL ONE-LINE DIAGRAM FOR ADDITIONAL INFORMATION.
19. COMBINATION MOTOR STARTER/DISCONNECT SWITCH PROVIDED BY DIVISION 23, INSTALLED BY DIVISION 26.
20. FOLDING DOOR MANUFACTURER TO PROVIDE CONTROL PANEL. REFER TO MANUFACTURER SPECIFICATIONS FOR ALL NECESSARY RELAYS AND COMPONENTS FOR A COMPLETE WORKING SYSTEM.
21. PROVIDE 20A RECEPTACLE FOR AIR DRYER(AD-1). COORDINATE EXACT LOCATION WITH DIVISION 23 INSTALLER.
22. PROVIDE 120V POWER FOR TIMESWITCH (TS-1). COORDINATE EXACT LOCATION WITH DIVISION 23 INSTALLER.
23. PROVIDE POWER TO OWNER PROVIDED CALL-BOX. COORDINATE EXACT LOCATION WITH OWNER/ARCHITECT PRIOR TO ROUGH-IN.

DBR
9601 McAllister Freeway, Suite 410
San Antonio, Texas 78216
210.546.0200 p
210.546.0201 f
TBPE Firm Registration No. 2234

TRUE NORTH / PROJECT NORTH

DBR Project Number 196023.000

JC	BV	DA	WJ	JC

PROFESSIONAL SEAL

STATE OF TEXAS — M. JACQUELINE CHANG — 124987 — LICENSED PROFESSIONAL ENGINEER — 01/30/2020

LOGO/CONTACT

martinez ARCHITECTS
Martinez Architect, LP
900 Rockmead, Suite 250
Houston, Texas 77339
281.346.7371

DESIGN TEAM

Architectural
Martinez Architects
Civil Engineer
Maverick Engineering
Structural
Matrix Structural engineers
MEP/FP
DBR
Landscape Architect
KDC Associates

FIRE STATION #5

CITY OF MIDLAND
2200 W GOLF COURSE RD
MIDLAND, TX 79701

PROJECT No: MA 18017
DATE: 01/30/2020

No.	Date	Description
1	01/30/2020	100% CD
2	02/20/2020	Addendum 02

LEVEL 1 POWER PLAN

E201

4.1635

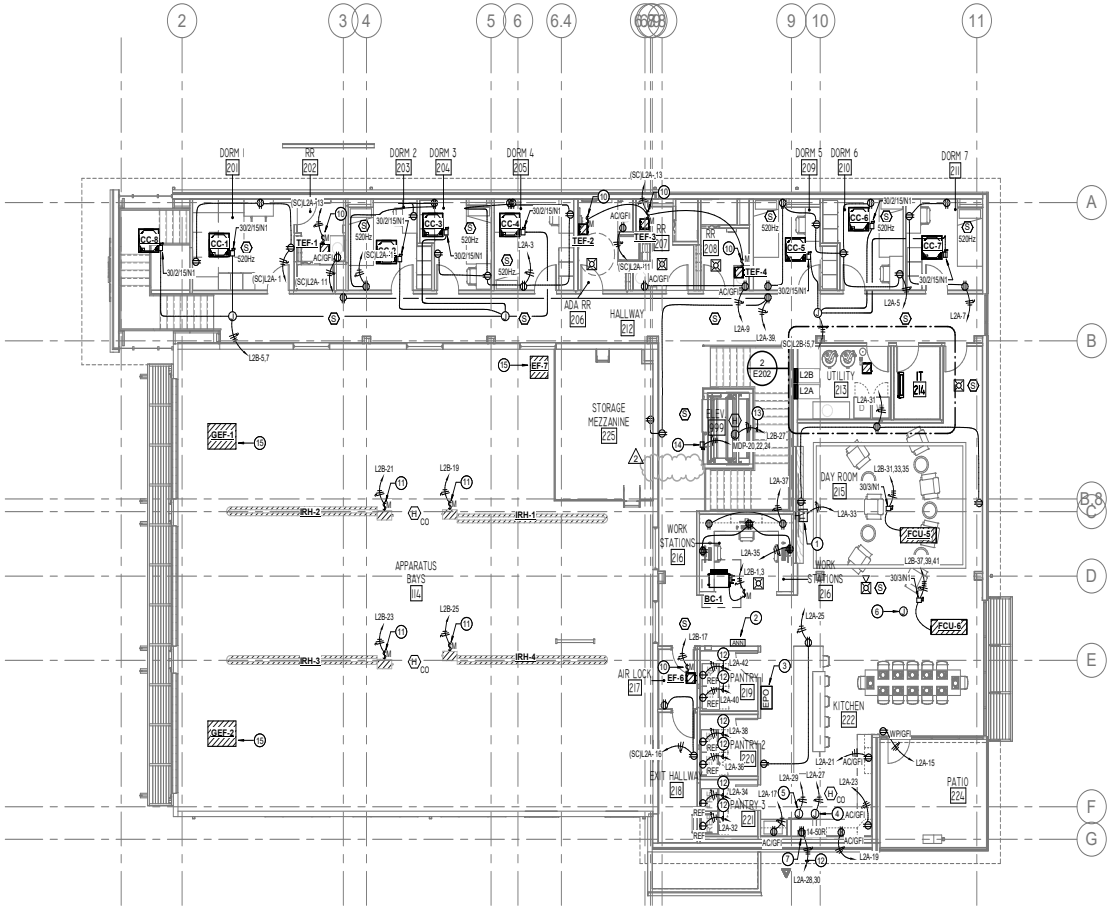

1 E202 **LEVEL 2 POWER PLAN**
1/8" = 1'-0"

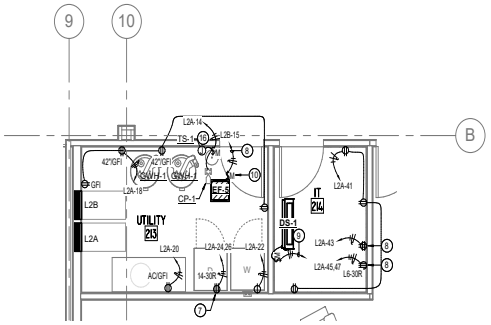

2 E202 **ENLARGED LEVEL 2 POWER PLAN - UTILITY/IT**
1/4" = 1'-0"

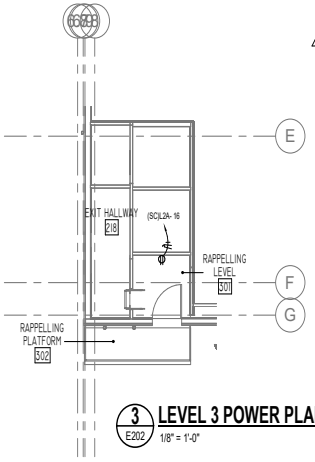

3 E202 **LEVEL 3 POWER PLAN**
1/8" = 1'-0"

ELECTRICAL GENERAL NOTES

A. ELECTRICAL CONTRACTOR SHALL GROUP HOMERUNS WITH THREE HOTS (A,B, AND C PHASE), AND #10 NEUTRAL TO PROVIDE MULTI-WIRE BRANCH CIRCUITS. NO MORE THAN 1 MULTI-WIRE HOMERUNS PER CONDUIT. CONTRACTOR SHALL PROVIDE HANDLE TIES MANUFACTURED BY THE SWITCH GEAR SUPPLIER ON ALL MULTI-WIRE CIRCUITS TO MEET THE REQUIREMENTS OF ARTICLE 210.4(B) OF THE 2017 NEC. AT THE CONTRACTOR'S OPTION, TWO AND THREE POLE BREAKERS MAY BE USED.

B. CONTRACTOR SHALL VERIFY DEVICE LOCATIONS WITH ARCHITECT PRIOR TO ROUGH-IN. REFER TO ARCHITECTURAL CASEWORK AND MILLWORK ELEVATIONS.

C. ELECTRICAL CONTRACTOR SHALL PROVIDE CONDUIT, OUTLET BOXES, JUNCTION BOXES FOR ALL TECHNOLOGY DEVICE OUTLETS. REFER TO DIVISION 26 SPECIFICATIONS AND TECHNOLOGY DRAWINGS FOR ALL WORK REQUIRED.

D. HVAC AND PLUMBING EQUIPMENT MAY DIFFER FROM LOCATIONS AS SHOWN ON ELECTRICAL DRAWINGS. COORDINATE EXACT LOCATIONS WITH MECHANICAL AND PLUMBING CONTRACTOR.

E. ENGRAVE ALL COVER PLATES WITH PANEL NAME AND CIRCUIT NUMBER. PROVIDE SEPARATE PRICE FOR THIS WORK. CONTRACTOR SHALL ARRANGE PANEL BOARDS TO PROVIDE CLEARANCE PER NEC 110.26.

F. ALL SINGLE-PHASE RECEPTACLES RATED 150 VOLTS TO GROUND, OR LESS, 50 AMPERES OR LESS AND THREE-PHASE RECEPTACLES RATED 150 VOLTS TO GROUND OR LESS, 100A OR LESS, IN FOOD SERVICE AREAS, BATHROOMS, ROOFTOPS, OUTDOORS, INDOOR WET LOCATIONS, LOCKER ROOMS, OR CRAWL SPACES SHALL BE GFCI, IN ACCORDANCE WITH NEC 210.8(B).

G. ELECTRICAL CONTRACTOR TO COORDINATE WITH PURVIS INSTALLER FOR ALL REQUIREMENTS PRIOR TO ROUGH-IN.

H. ELECTRICAL CONTRACTOR SHALL PROVIDE CONTACTOR FOR SHUTOFF TO ELECTRIC OVEN. MUST BE TIED INTO PURVIS SYSTEM. MANUAL RESET FOR GAS AND ELECTRICAL SHUTOFFS BY ELECTRICAL CONTRACTOR.

I. ALL EXTERIOR EQUIPMENT SPECIFICALLY THE GENERATOR AND MECHANICAL EQUIPMENT MUST MEET THE TEXAS DEPARTMENT OF INSURANCE WIND LOAD REQUIREMENTS.

ELECTRICAL KEYED NOTES

1. POWER AND A/V OUTLETS FOR WALL MOUNTED TELEVISION. FIELD COORDINATE EXACT LOCATION WITH ARCHITECT/OWNER PRIOR TO ROUGH-IN. COORDINATE PURVIS SYSTEM WITH TECHNOLOGY DRAWINGS.
2. FIRE ALARM REMOTE ANNUNCIATOR. COORDINATE EXACT LOCATION WITH OWNER BEFORE ROUGH-IN.
3. PROVIDE EMERGENCY PUSH BUTTON, BUTTON SHALL DISCONNECT ALL ELECTRICAL CIRCUITS SERVING ABOVE COUNTER RECEPTACLES, RANGE, MICROWAVE AND SHUT GAS DOWN SERVING RANGE. FIELD COORDINATE EXACT LOCATION WITH ARCHITECT/OWNER PRIOR TO ROUGH-IN.
4. 120V JUNCTION BOX CONNECTION FOR RANGE HOOD LIGHTS AND FAN. FIELD COORDINATE EXACT LOCATION AND ADDITIONAL REQUIREMENTS WITH ARCHITECT/OWNER PRIOR TO ROUGH-IN. PROVIDE ADA COMPLIANT SWITCHES FOR HOOD AND HOOD LIGHT.
5. PROVIDE POWER FOR FIRE SUPPRESSION SYSTEM. SYSTEM IS TO BE TIED INTO FIRE ALARM CONTROL PANEL.
6. PROVIDE JUNCTION BOX FOR ALERTING SYSTEM DEVICE PROVIDED BY OTHERS. PROVIDE CONDUIT TO ABOVE ACCESSIBLE CEILING AREA. COORDINATE WITH ARCHITECT AND OWNER PRIOR TO ROUGH-IN.
7. VERIFY EXACT NEMA CONFIGURATION WITH EQUIPMENT MANUFACTURER PRIOR TO INSTALLATION.
8. PROVIDE (1) 30A @208V SPECIAL RECEPTACLE AND (1) QUAD 5-20R RECEPTACLES INSIDE IT ROOM. FIELD COORDINATE EXACT LOCATION AND NEMA CONFIGURATION OF SPECIAL RECEPTACLE WITH TECHNOLOGY CONTRACTOR PRIOR TO ROUGH-IN.
9. MINI-SPLIT INDOOR EVAPORATOR UNIT SHALL RECEIVE POWER FROM ASSOCIATED ROOFTOP CONDENSING UNIT WITH FIELD SUPPLIED WIRING.
10. EXTEND CIRCUIT TO INTEGRAL FAN -MOUNTED MOTOR RATED TOGGLE SWITCH. FAN TO BE INTERLOCKED WITH DEDICATED SWITCH/THERMOSTAT IN ASSOCIATED ROOM.
11. PROVIDE CONNECTION TO INFRARED HEATER DISCONNECT SWITCH, PROVIDED BY DIVISION 23. COORDINATE EXACT LOCATION OF DISCONNECT SWITCH WITH MECHANICAL.
12. EXTEND APPLIANCE CIRCUIT THROUGH GFI CIRCUIT BREAKER.
13. PROVIDE CONNECTION TO ELEVATOR CAB LIGHTS/FAN/RECEPTACLE. COORDINATE EXACT LOCATION WITH ELEVATOR INSTALLER.
14. PROVIDE 200A/125A-FUSED BUSSMANN ELEVATOR DISCONNECT MODULE FOR ELEVATOR CONTROLLER CONNECTION. PROVIDE WITH FIRE ALARM AND RECALL INTERFACE. COORDINATE EXACT LOCATION WITH ELEVATOR INSTALLER.
15. REFER TO SHEET E201 FOR COMBINATION MOTOR STARTER/DISCONNECT SWITCH LOCATION. MOTOR START/DISCONNECT SWITCH PROVIDED BY DIVISION 23, INSTALLED BY DIVISION 26.
16. PROVIDE 120V POWER FOR TIMESWITCH (TS-1). COORDINATE EXACT LOCATION WITH DIVISION 22 INSTALLER.

TRUE NORTH / PROJECT NORTH

DBR
9601 McAllister Freeway, Suite 410
San Antonio, Texas 78216
210.546.0200 p
210.546.0201 f
TBPE Firm Registration No. 2234

DBR Project Number 196023.000

JC	BV	DA	WJ	JC

PROFESSIONAL SEAL

STATE OF TEXAS
M. JACQUELINE CHANG
124987
LICENSED PROFESSIONAL ENGINEER
04/30/2020

LOGO/CONTACT

martinez ARCHITECTS
Martinez Architect, LP
900 Rockmead, Suite 250
Houston, Texas 77339
281.346.7371

DESIGN TEAM

Architectural
Martinez Architects

Civil Engineer
Maverick Engineering

Structural
Matrix Structural engineers

MIE/P/T
DBR

Landscape Architect
KDC Associates

FIRE STATION #5

CITY OF MIDLAND
2200 W GOLF COURSE RD
MIDLAND, TX 79701

PROJECT No: **MA 18017**
DATE: **01/30/2020**

No.	Date	Description
1	01/30/2020	100% CD
2	02/20/2020	Addendum 02

LEVEL 2 & 3 POWER PLAN

E202

4.1636

SPD SCHEDULE

MARK	MANUFACTURER	MODEL	VOLTAGE	PER MODE/PHASE	PHASE	BREAKER SIZE	ACCUGUIDE CABLE SIZE
SPD1	ASCO (LIEBERT)	560120YP16ACCG10	208/120	80/160KA	3	60A/3P	5 #10, 1-1/2" C.
SPD2	ASCO (LIEBERT)	510120YP16ACAJ20	208/120	80/160KA	3	30A/3P	5 #10, 1-1/2" C.

ELECTRICAL SERVICE SCOPE:

THE CONTRACTOR SHALL BE RESPONSIBLE FOR DELIVERY OF SERVICE TO THE NEW BLDG. COORDINATE ALL REQUIREMENTS AND COSTS AND LABOR W/ LOCAL UTILITY PRIOR TO BID. ALL COSTS ASSOCIATED W/ THE DELIVERY OF ELECTRICAL SERVICE SHALL BE INCLUDED AS A PART OF THIS CONTRACT. REFER TO SPECIFICATIONS FOR ADDITIONAL REQUIREMENTS.

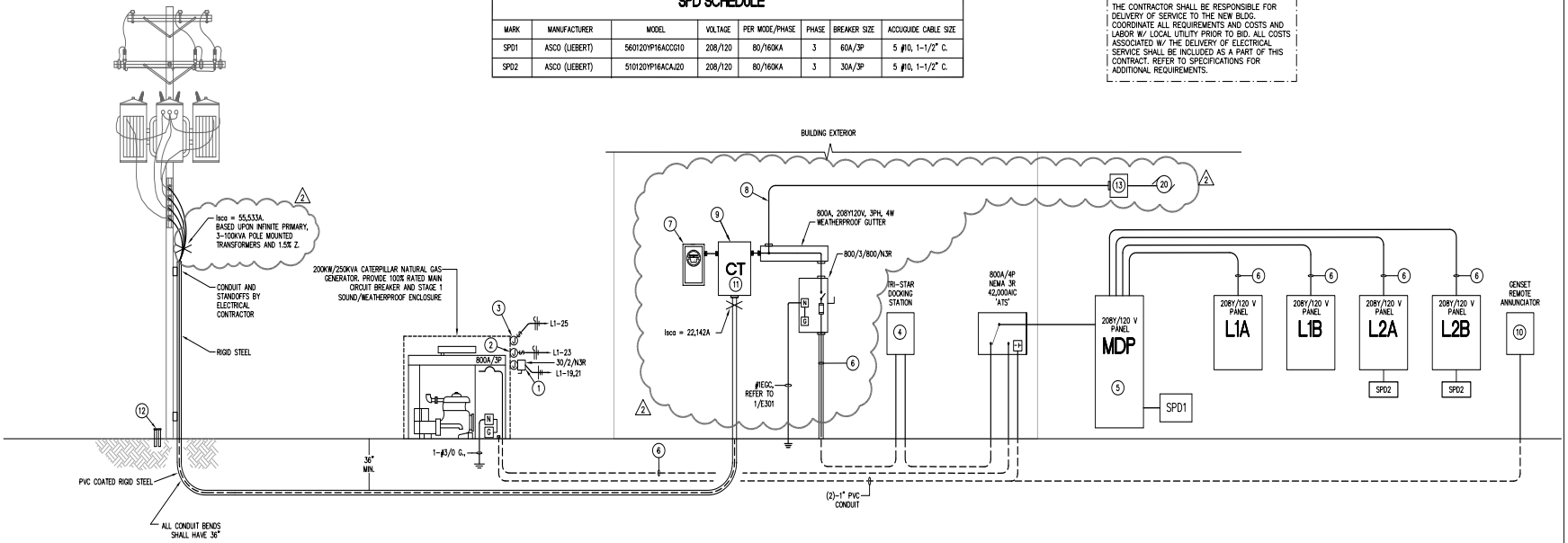

1 E401 ELECTRICAL ONE-LINE DIAGRAM

NOT TO SCALE

ONE-LINE DIAGRAM GENERAL NOTES:

A. MANUFACTURER OF ELECTRICAL GEAR SHALL PROVIDE A COORDINATION STUDY FOR THE ENTIRE ELECTRICAL SYSTEM IN ORDER TO SET BREAKERS. REFER TO SPECIFICATIONS. MANUFACTURER SHALL ALSO PROVIDE A FAULT CURRENT/ARC FAULT STUDY FOR THE ENTIRE ELECTRICAL SYSTEM IN ORDER TO SELECT INTERRUPTING RATINGS OF ALL CIRCUIT BREAKERS, DISTRIBUTION PANELBOARDS, PANELBOARDS, ETC. A FULLY RATED SYSTEM SHALL BE USED.

B. CONTRACTOR SHALL PROVIDE AN ENGRAVED NAMEPLATE ON ALL NEW ELECTRICAL EQUIPMENT INDICATION EQUIPMENT VOLTAGE,AMPERAGE AND AVAILABLE SHORT CIRCUIT RATING PER 2018 NEC.

C. METERING EQUIPMENT ENCLOSURE PROVIDED BY ENCOR, INSTALLED BY ELECTRICAL CONTRACTOR PER ENCOR'S SPECIFICATIONS. METER INSTALLED BY ENCOR.

D. ALL CONDUCTORS SHALL BE COPPER.

E. CONTRACTOR SHALL INSTALL FEEDERS BASED ON THE OVERCURRENT DEVICE RATING UNLESS OTHERWISE NOTED. CONTRACTOR SHALL REFER TO THE FEEDER SCHEDULE TO OBTAIN AND INSTALL THE FEEDERS REQUIRED.

F. PRIOR TO INSTALLATION OF UNDERGROUND FEEDERS, THE ELECTRICAL CONTRACTOR SHALL SUBMIT AN UNDERGROUND ROUTING PLAN TO THE ENGINEER OF RECORD., INDICATING THE EXACT ROUTING PATH FOR ALL UNDERGROUND CONDUIT. INDICATE STUB-UP LOCATIONS, SIZE AND QUANTITY OF CONDUIT. ALL ELECTRICAL PANELS AND EQUIPMENT SHALL BE SHOWN ON THIS PLAN FOR REFERENCE OF CONDUIT TERMINATION.

ELECTRICAL KEYED NOTES:

1. 208V JUNCTION BOX CONNECTION TO GENERATOR'S JACKET HEATER. FIELD COORDINATE EXACT LOCATION AND ADDITIONAL MANUFACTURER'S REQUIREMENTS WITH GENERATOR INSTALLER PRIOR TO ROUGH-IN.
2. 120V JUNCTION BOX CONNECTION FOR GENERATOR'S ANTI-CONDENSATION HEATER, FIELD COORDINATE EXACT LOCATION AND ADDITIONAL MANUFACTURER'S REQUIREMENTS WITH GENERATOR INSTALLER PRIOR TO ROUGH-IN.
3. 120V JUNCTION BOX CONNECTION FOR BATTERY CHARGER. FIELD COORDINATE EXACT LOCATION AND ADDITIONAL MANUFACTURER'S REQUIREMENTS WITH GENERATOR INSTALLER PRIOR TO ROUGH-IN.
4. PROVIDE 800A TRYSTAR DOCKING STATION AND MANUAL TRANSFER SWITCH FOR TEMPORARY GENERATOR/LOAD BANK.
5. REFER TO SCHEDULE ON SHEET E502 FOR CIRCUIT BREAKER SIZES.
6. REFER TO FEEDER SCHEDULES ON THIS SHEET FOR WIRE AND CONDUIT SIZE AND QUANTITIES.
7. METER BOX FOR CT RATED METER PROVIDED BY ENCOR, INSTALLED BY ELECTRICAL CONTRACTOR PER ENCOR'S SERVICE STANDARDS.
8. TAP FROM 800A GUTTER FOR SERVICE TO FOR FIRE PUMP. ROUTE 3#2, #8GND, 1-1/2"C IN RIGID CONDUIT WITH 2-HR ENCLOSURE, OR EQUIVALENT.
9. METERING POTENTIAL TRANSFORMER BOX PROVIDED BY ENCOR, INSTALLED BY ELECTRICAL CONTRACTOR PER ENCOR'S SERVICE STANDARDS.
10. COORDINATE EXACT LOCATION OF GENERATOR ANNUNCIATOR PANEL WITH ARCHITECT/OWNER.
11. COORDINATE WITH ENCOR FOR ALL UTILITY STANDARDS.
12. PROVIDE (2) 2" RIGID CONDUITS ON RISER POLE FOR TELECOMMUNICATION CABLING AND CABLE SERVICE. COORDINATE ADDITIONAL REQUIREMENTS WITH OWNER SELECTED PROVIDER. REFER TO MEP SITE PLAN FOR APPROXIMATE ROUTING.
13. FIRE PUMP AND CONTROLLER FURNISHED BY DIV. 21. COORDINATE WITH FIRE PUMP INSTALLER FOR ALL CONNECTIONS TO PUMP AND JOCKEY PUMP.

LOAD ANALYSIS - MIDLAND FIRE STATION #5

208 / 120, 3-PHASE 4-WIRE — Date: 2/18/2020

DESCRIPTION	10,505 S.F.			NEC	KVA
LIGHTING:					
INTERIOR =	10,505 S.F.		3 VA/S.F. X 125%	210.20(a)	39.4
EXTERIOR =	500 VA	X 125%			0.6
POWER:					
RECEPTACLES =	11,099 S.F.		1 VA/S.F.	220.44	11.1
MISCELLANEOUS =	10,505 VA		1 VA/S.F.		10.5
ELEVATOR =	22,373 VA				22.4
HVAC:					
FANS =	12,384 VA				24.8
COOLING =	28,397 VA			220.60	0.0
HEATING=	38,300 VA			220.60	38.3
	Load		Quantity		
Cascade Equipment	31,000 VA	X	1.0		31.0
Compressor	12,000 VA	X	1.0		12.0
Overhead Door	1,200 VA	X	3.0		3.6
Range	8,000 VA	X	1.0		8.0
Hood	800 VA	X	1.0		0.8
Washer	1,200 VA	X	1.0		1.2
Dryer	4,000 VA	X	1.0		4.0
Extractor/Washer	8,000 VA	X	1.0		8.0
25% LARGEST MOTOR =	5,593 VA			430.24	5.6
PLUMBING:					
WATER HEATER =	12,000 VA				12.0
				TOTAL =	233.3
SQUARE FOOTAGE = 10,505				TOTAL AMPS:	647.5
				SERVICE SIZE:	800.0
				SPARE AMPACITY	152.5

SERVICE LATERAL AND FEEDER SCHEDULE (COPPER ONLY)

AMPERAGE	SETS	CONDUCTOR SIZE	CONDUIT (INCHES)
30A	1	4#10, 1#10 G.	3/4"C
40A	1	4#8, 1#10 G.	1"C
50A	1	4#8, 1#10 G.	1"C
60A	1	4#6, 1#10 G.	1"C
70A	1	4#4, 1#8 G.	1 1/4"C
80A	1	4#4, 1#8 G.	1 1/4"C
90A	1	4#3, 1#8 G.	1 1/4"C
100A	1	4#3, 1#8 G.	1 1/4"C
125A	1	4#1, 1#6 G.	1 1/2"C
150A	1	4#1/0, 1#6 G.	1 1/2"C
175A	1	4#2/0, 1#6 G.	2"C
200A	1	4#3/0, 1#6 G.	2"C
225A	1	4#4/0, 1#4 G.	2 1/2"C
250A	1	4#250KCMIL, 1#4 G.	2 1/2"C
300A	1	4#350KCMIL, 1#4 G.	3"C
350A	1	4#500KCMIL, 1#3 G.	3 1/2"C
400A	1	4#600KCMIL, 1#3 G.	4"C
450A	2	4#4/0, 1#2 G.	2 1/2"C
500A	2	4#250KCMIL, 1#2G.	2 1/2"C
600A	2	4#350KCMIL, 1#1G.	3"C
800A	2	4#600KCMIL, 1#1/0G.	4"C

1. ELECTRICAL CONTRACTOR SHALL PROVIDE THE NUMBER OF LUGS AND PROPER LUG SIZES TO ACCEPT CONDUCTOR SIZES SHOWN.
2. DO NOT PROVIDE GROUNDING CONDUCTOR IN SERVICE LATERAL FROM POWER COMPANY TRANSFORMER.
3. CONTRACTOR SHALL INCREASE FEEDERS IN SIZE TO COMPENSATE FOR VOLTAGE DROP. FEEDERS SHALL BE SIZED TO MAINTAIN A 2% OR LESS VOLTAGE DROP ON FEEDERS AND A 3% OR LESS VOLTAGE DROP ON BRANCH CIRCUITS.

DBR
9601 McAllister Freeway, Suite 410
San Antonio, Texas 78216
210.546.0200 v 210.546.0201 f
TBPE Firm Registration NO. 2234

DBR Project Number 196023.000

JC	BV	DA	WJ	JC

PROFESSIONAL SEAL

M. JACQUELINE CHANG 124987 LICENSED PROFESSIONAL ENGINEER
02/20/2020

LOGO/CONTACT

martinez ARCHITECTS
Martinez Architect, LP
900 Rockmead, Suite 250
Houston, Texas 77339
281.346.7371

DESIGN TEAM

Architectural
Martinez Architects

Civil Engineer
Maverick Engineering

Structural
Matrix Structural Engineers

M/E/P/T
DBR

Landscaping
KDC Associates

FIRE STATION #5

CITY OF MIDLAND
2200 W GOLF COURSE RD
MIDLAND, TX 79701

PROJECT No: MA 18017
DATE: 01/30/2020

No.	Date	Description
1	01/30/2020	100% CD
2	02/20/2020	Addendum 02

ELECTRICAL ONE-LINE DIAGRAM

E401

4.1637

LIGHTING FIXTURE SCHEDULE

TAG	MANUFACTURER	MODEL	MOUNTING	LAMP	VOLTAGE	APPARENT POWER	DESCRIPTION
A1	PHILIPS - DAYBRITE	2FGG-43L-835-4-DS-UNV-DIM	RECESSED	3500K LED	UNIVERSAL	36 VA	2X4 VOLUMETRIC FIXTURE WITH 4,300 LUMENS AND 3500K.
B1	PHILIPS - DAYBRITE	2FGG-38L-835-2-DS-UNV-DIM	RECESSED	3500K LED	UNIVERSAL	34 VA	2X2 VOLUMETRIC FIXTURE WITH 3,800 LUMENS AND 3500K.
D1	LIGHTOLIER	4RN-C4L15835MZ10U-C4RSLCL	RECESSED	3500K LED	UNIVERSAL	16 VA	4" MEDIUM BEAM LENSED DOWNLIGHT WITH 1,500 LUMENS AND 3500K.
D2	LIGHTOLIER	4RN-C4L15840MZ10U-C4RSLCL-C4RVPWH	RECESSED	3500K LED	UNIVERSAL	16 VA	SAME AS FIXTURE TYPE D1 EXCEPT WITH IP65 RATING AND 4000K.
D3	VERSALED LIGHTING	VP3-Q-S-10L-QT-40K	SURFACE	4000K LED	UNIVERSAL	16 VA	VAPOR PROOF JELLY JAR FIXTURE WITH 800 LUMENS AND 4000K.
F1	PHILIPS - DAYBRITE	V3WEZ440L840UNV	SURFACE	3500K LED	UNIVERSAL	32 VA	4' VAPOR PROOF FIXTURE WITH 4,000 LUMENS AND 4000K.
F2	PHILIPS - DAYBRITE	FSS880L835-UNV-DIM	SURFACE	3500K LED	UNIVERSAL	64 VA	8' INDUSTRIAL STRIP FIXTURE WITH 8000 LUMENS AND 3500K.
F3	PHILIPS - DAYBRITE	FSS455L835-UNV-DIM	SURFACE	3500K LED	UNIVERSAL	48 VA	4' INDUSTRIAL STRIP FIXTURE WITH 5500 LUMENS AND 3500K.
H1	PHILIPS - DAYBRITE	FBX36LL35-UNV-LFR	SURFACE	3500K LED	UNIVERSAL	255 VA	4' HIGH BAY FIXTURE WITH 36,000 LUMENS AND 3500K.
P1	LIGHTOLIER	C6PDL15835WZ10UCCW-CACK10WH	PENDANT	3500K LED	UNIVERSAL	15 VA	6" DECORATIVE PENDANT WITH 1,500 LUMENS AND 3500K.
S1	B-K LIGHTING	TYZ-LED-XS1-NFL-DS7-MT	FLUSH IN-GRADE	4000K LED	UNIVERSAL	57 VA	4" FLUSH MOUNTED IN-GRADE FLAG POLE FIXTURE WITH 5,500 LUMENS AND 4,000K.
W1	PHILIPS - GARDCO	101L-78L-700-NW-DJ-T-3-UNV-DD-F11-WH	WALL	4000K LED	UNIVERSAL	26 VA	EXERIOR WALL SCONCE WITH 3,200 LUMENS AND 4000K.
W2	LIGHTOLIER	C8WDW15835WZ10UCCW	WALL	3500K LED	UNIVERSAL	26 VA	REPELLING TOWER EXIT HALLWAY WALL SCONCE WITH 1,500 LUMENS AND 3500K.
W3	EDWARDS SIGNALING	105XBRMA120A-105BM-105BX	WALL	AMBER LED	120V	12 VA	FLASHING BEACON AT 7'-0". BEACON SHALL FLASH WHEN ASSOCIATED APPARATUS BAY DOOR IS IN OPERATION. PROVIDE CONTROL RELAY AND TIE INTO OVERHEAD OPERATOR.
X1	EMERGI-LIGHT	CLXARW	UNIVERSAL	LED	UNIVERSAL	2 VA	UNIVERSAL EXIT SIGN WITH CHEVRONS AS INDICATED ON PLANS.

LIGHTING FIXTURE SCHEDULE GENERAL NOTES

A. IT SHALL BE THE RESPONSIBILITY OF THE CONTRACTOR TO CONFIRM THE COMPATIBILITY BETWEEN THE CEILING TYPE, AS DEFINED ON THE ARCHITECTURAL ROOM FINISH SCHEDULE, AND THE LIGHTING FIXTURE TRIM AS DEFINED ON THE LIGHTING FIXTURE SCHEDULE. NO CHANGES OR DEVIATIONS SHALL BE MADE FROM THE CONTRACT DOCUMENTS, HOWEVER, WITHOUT THE WRITTEN APPROVAL OF THE ENGINEER/ARCHITECT.

B. EQUIVALENT PRODUCTS BY THE FOLLOWING MANUFACTURER'S MAY BE ACCEPTABLE AS ALTERNATE SUBSTITUTIONS (ALTERNATE PRODUCTS SHALL HAVE SUFFICIENT DATA FOR REVIEW AND APPROVAL, INCLUDING POINT-BY-POINT ELECTRONIC CALCULATIONS): ACUITY, PHILIPS-DAYBRITE, PHILIPS-LIGHTOLIER, PHILIPS-GARDCO, LSI AND WILLIAMS.

C. ALL LIGHTING FIXTURE COLOR FINISHES/PATTERNS MUST BE SELECTED BY THE ARCHITECT FROM THE MANUFACTURER'S FULL RANGE. THE GENERAL CONTRACTOR IS TO CONFIRM ALL COLORS WITH THE ARCHITECT PRIOR TO ORDERING. ALL FIXTURE COLORS NOT CONFIRMED, SHALL BE CORRECTED AT THE GC'S COST.

D. CONFIRM ALL FIXTURE MOUNTING HEIGHTS WITH THE ARCHITECTURAL DETAILS AND ELEVATIONS PRIOR TO ROUGH-IN.

LIGHTING CONTROL DEVICE SCHEDULE

TAG	DESCRIPTION	MANUFACTURER	MODEL NUMBER	VOLTAGE	CONTROL FUNCTION
D	DIMMER WALL SWITCH	DOUGLAS LIGHTING	WRD-8701	LOW VOLTAGE	1-BUTTON ON/OFF WITH DIMMER
DS	CEILING/STRUCTURE MOUNTED PHOTO SENSOR	DOUGLAS LIGHTING	WPP-INT	LOW VOLTAGE	PHOTO SENSOR TO AUTOMATICALLY DIM LIGHT FIXTURES WITHIN DAY LIGHT ZONE ACCORDING TO AMOUNT OF DAYLIGHT PRESENT
DV	OCCUPANCY SENSOR WALL SWITCH (VACANCY MODE WITH DIMMING)	DOUGLAS LIGHTING	WOSSDD2-P-VW	LOW VOLTAGE	1-BUTTON ON/OFF WALL SWITCH SENSOR WITH DIMMING AND AUTOMATIC OFF AFTER 20 MINUTES OF INACTIVITY
F					
LV	DIGITAL WALL SWITCH (1-BUTTON)	DOUGLAS LIGHTING	WSW-3511	LOW VOLTAGE	1-BUTTON ON/OFF, ZONES INDICATED ON DRAWINGS
LV1	DIGITAL WALL SWITCH (1-BUTTON WITH DIMMER)	DOUGLAS LIGHTING	WSD-3501	LOW VOLTAGE	1-BUTTON ON/OFF WITH DIMMER, ZONES INDICATED ON DRAWINGS
OC	OCCUPANCY SENSOR WALL SWITCH	DOUGLAS LIGHTING	WOSSIU1-N-VW	LOW VOLTAGE	1-BUTTON ON/OFF WALL SWITCH SENSOR WITH AUTOMATIC ON TO 100%
OC1	CEILING/STRUCTURE MOUNTED OCCUPANCY SENSOR	DOUGLAS LIGHTING	WORSDU1-P-N	LOW VOLTAGE	AUTOMATICALLY TURN ON LIGHTS TO 100%, TURNS OFF LIGHTS AFTER 20 MINUTES OF INACTIVITY
OC2	CEILING/STRUCTURE MOUNTED OCCUPANCY SENSOR	DOUGLAS LIGHTING	WORSDD2-DPR-L	LOW VOLTAGE	AUTOMATICALLY TURN ON LIGHTS TO NOT MORE THAN 50%, TURNS OFF LIGHTS AFTER 20 MINUTES OF INACTIVITY
OC3	CEILING/STRUCTURE MOUNTED OCCUPANCY SENSOR (HIGH BAY)	DOUGLAS LIGHTING	WORBID2-DPR-L	LOW VOLTAGE	AUTOMATICALLY TURN ON LIGHTS TO 100%, TURNS OFF LIGHTS AFTER 20 MINUTES OF INACTIVITY
RC	DIALOG ROOM CONTROLLER	DOUGLAS LIGHTING	WRC-3160	LINE VOLTAGE	ZONE A ON/OFF, ZONE A DIM UP/DOWN, ZONE B ON/OFF, ZONE B DIM UP/DOWN
S	SINGLE POLE ROCKER SWITCH	DOUGLAS LIGHTING		LINE VOLTAGE	ON/OFF
T	SPRING WOUND TIMER	DOUGLAS LIGHTING		LINE VOLTAGE	LINE VOLTAGE TIMER SWITCH
VC	OCCUPANCY SENSOR WALL SWITCH (VACANCY MODE)	DOUGLAS LIGHTING	WOSSIU1-N-VW	LOW VOLTAGE	1-BUTTON ON/OFF WALL SWITCH SENSOR WITH AUTOMATIC OFF AFTER 20 MINUTES OF INACTIVITY

LIGHTING CONTROL DEVICE SCHEDULE GENERAL NOTES

A. REFER TO LIGHTING PLANS FOR ZONE CONTROL INFORMATION AND DEVICE LOCATIONS.

B. ALL DEVICE LOCATIONS SHALL BE COORDINATED WITH OWNER/ARCHITECT PRIOR TO ROUGH-IN.

C. PROVDIE ALL NECESSARY COMPONENTS FOR A FULLY FUNCTIONAL SYSTEM.

LIGHTING CONTROLS/COMMISSIONING PLAN

THE CONTRACTOR SHALL INCLUDE, AS PART OF THEIR SCOPE, THE REQUIREMENTS TO COMMISSION THE LIGHTING CONTROL SYSTEM, AS REQUIRED BELOW. THE LIGHTING CONTROL SYSTEM MAY BE STAND-ALONE, NETWORK, RELAY, CONTACTOR OPERATED, TIMER, PHOTOCELL, OR ANY COMBINATION OF THESE LISTED. FOR EACH OF THE FOLLOWING TASKS, RECORD THE DATE PERFORMED, PERSON(S) COMPLETING THE VERIFICATION, INTIAL SETTING/CONDITION, ACTIONS PERFORMED, AND FINAL SETTING CONDITION. SUBMIT DOCUMENTATION TO THE CITY HAVING JURISDICATION AT OR BEFORE SUBSTANTION COMPLETION. SUBMITTING AFTER SUBSTANTION COMPLETION WILL DELAY THE ISSUANCE OF A CERTIFICATE OF OCCUPANCY.

A. ENSURE ALL LIGHTING FIXTURES HAVE LAMPS THAT ARE FUNCTIONAL.

B. TEST ALL EXIT SIGNS, EMERGENCY LIGHTING FIXTURES, AND EMERGENCY TRANSFER DEVICES OR BATTERY BACKUPS THAT ARE INTEGRAL OR REMOTE.

C. VERIFY THAT ALL OCCUPANCY SENSORS HAVE BEEN INSTALLED AND ARE OPERATIONS.

D. TEST ALL WALL-SWITCH OCCUPANCY SENSORS.

E. TEST ALL DIGITAL/LOW VOLTAGE SWITCHES AND THEIR PERIPHERALS, WHERE INSTALLED, SUCH AS:
   a. OCCUPANCY SENSORS
   b. POWER PACKS
   c. DAYLIGHT SENSORS

F. VERIFY THE FOLLOWING FUNATIONALITY AND/OR INSTALLATION OF ALL CONTROL DEVICES:
   a. SENSORS HAVE BEEN LOCATED AND AIMED TO RELEVANT LOCATIONS OF OCCUPANCY, PER MANUFACTURERS RECOMMENDATION.
   b. VERIFY STATUS INDICATORS ON DEVICES ARE OPERATIONAL AND CORRECT.
   c. DEVICES CONTROL LIGHTING FIXTURES AS SPECIFIED ON THE DRAWINGS.
   d. ALL OCCUPANCY/VACANCY MODE TIME-OUTS ARE SET TO NO GREATER THAN 30 MINUTES.
   e. ALL CONTROL DEVICES ARE SET VACANCY MODE, OR NO MORE THAN 50% OF FIXTURES TURN ON AUTOMATICALLY UPON ENTERING A SPACE/ROOM.
   f. MOVEMENT IN ADJACENT SPACES OR CYCLING OF HVAC SYSTEMS DOES NOT FALSELY TRIGGER SENSORS (VACANCY MODE PREFERRED TO PREVENT THIS).

G. SHOULD ADDITIONAL INFORMATION REGARDING THE TESTING REQUIREMENTS BE NEEDED, REFERENCE IECC 2015 SECTION 408.3.

DBR
9601 McAllister Freeway, Suite 410
San Antonio, Texas 78216
210.546.0200 p
210.546.0201 f
TBPE Firm Registration No. 2234

DBR Project Number 196023.000

JC	BV	DA	WJ	JC

PROFESSIONAL SEAL

STATE OF TEXAS
M. JACQUELINE CHANG
124987
LICENSED PROFESSIONAL ENGINEER
04/30/2020

LOGO/CONTACT

martinez ARCHITECTS
Martinez Architect, LP
900 Rockmead, Suite 250
Houston, Texas 77339
281.346.7371

DESIGN TEAM

Architectural
Martinez Architects

Civil Engineer
Maverick Engineering

Structural
Matrix Structural engineers

MIE/P/T
DBR

Landscape Architect
KDC Associates

FIRE STATION #5
CITY OF MIDLAND
2200 W GOLF COURSE RD
MIDLAND, TX 79701

PROJECT No: **MA 18017**
DATE: **01/30/2020**

No.	Date	Description
1	01/30/2020	100% CD
2	02/20/2020	Addendum 02

ELECTRICAL SCHEDULES

E501

4.1638

Panelboard MDP

42000 AIC Rating
X New
Existing

120/208 Wye Volt, 3 Phase, 4 Wire
1 Section
Type 1 -Nema Rating

Mains Type: MLO

0 A MCB
600 A BUS (Copper)
ISO. GRND. BUS

X Single
Double
Feed - Thru

Mounting
X Surface
Flush

Note	Load...	Type	Description	Wire	CB	CKT	CB	Wire	Description	Type	Load...	N...
						1 2						
	27190 VA	L; R; EL; M	Electrical Panel L1A	4/0	225 A	3 4	225 A	4/0	Electrical Panel L1B	F; H; MT; M	67224 VA	
						5 6						
	34721 VA	L; R; SP; MT; M	Electrical Panel L2A	12	20 A	7 8	225 A	4/0	Electrical Panel L2B	SP; F; C; H; M	35415 VA	
						9 10						
						11 12						
	9114 VA	MT	Air Compressor	8	50 A	13 14	100 A	3	Cascade Machine: Shop 105	MT	22336 VA	
						15 16						
						17 18						
	3963 VA	F	Exhaust Fan: EF-7	8	35 A	19 20	125 A	2 1	Bussmann Elevator Module	E	16212 VA	
						21 22						
						23 24						
	--	--	Space	--	--	25 26	--	--	Space	--	--	
	--	--	Space	--	--	27 28	--	--	Space	--	--	
	--	--	Space	--	--	29 30	--	--	Space	--	--	
	--	--	Space	--	--	31 32	--	--	Space	--	--	
	--	--	Space	--	--	33 34	--	--	Space	--	--	
	--	--	Space	--	--	35 36	--	--	Space	--	--	
	--	--	Space	--	--	37 38						
	--	--	Space	--	--	39 40	60 A	6	SPD1	SP	0 VA	
	--	--	Space	--	--	41 42						

N.E.C. (2017)	Load Type	Conn.	Fct.	Diversity	N.E.C.(2017)	Load Type	Conn.	Fct.	Diversity
220.44	(R)Receptacle	34700 VA	64.41%	22350 VA	210.20(a)	(L)Lighting	7045 VA	125.00%	8807 VA
220.56	(K)Kitchen					(EL)Ext. Ltg.	1096 VA	125.00%	1370 VA
220.60	(C)Cooling	38442 VA	100.00%	0 VA	620.14	(E)Elevators	16212 VA	100.00%	16212 VA
220.60	(H)Heating	54848 VA	100.00%	54848 VA		(WH)Wat. Htr.			
220.60	(F)Fans	1638 VA	100.00%	1638 VA	220.5	(MT)Lrg. Motor	43926 VA	112.71%	49510 VA
	(M)Misc.	24080 VA	100.00%	24080 VA		(SP)Sub Pnl.	0 VA	Not Computed	0 VA

Total Connected Load: 218397 VA VA = 606 A
Total Load (Diversified): 175240 VA VA = 486 A

Location of Panel: ELECTRICAL 107

Panelboard L1A

22000 AIC Rating
X New
Existing

120/208 Wye Volt, 3 Phase, 4 Wire
1 Section
Type 1 -Nema Rating

Mains Type: MLO

0 A MCB
225 A BUS (Copper)
ISO. GRND. BUS

X Single
Double
Feed - Thru

Mounting
X Surface
Flush

Note	Load...	Type	Description	Wire	CB	CKT	CB	Wire	Description	Type	Load...	N...
	720 VA	R	Receptacles: Exterior Perimeter	12	20 A	1 2	20 A	12	Lighting: Flagpole	EL	228 VA	
	360 VA	R	Receptacles: Exterior Perimeter	12	20 A	3 4	20 A	12	Lighting: Exterior Egress	EL	104 VA	
	360 VA	R	Receptacles: Exterior Perimeter	12	20 A	5 6	20 A	12	Lighting: Exterior Perimeter	EL	112 VA	
	360 VA	R	Receptacles: Exterior Perimeter	12	20 A	7 8	20 A	12	Lighting: Patio	L	424 VA	
	180 VA	R	Air Dryer	12	20 A	9 10	20 A	12	Lighting: Apparatus Bay Flashers	L	36 VA	
	--	--	Spare	--	20 A	11 12	20 A	12	Lighting: First Level	L	1250 VA	
	1080 VA	R	Turnout Timers	12	20 A	13 14	20 A	12	Lighting: Monument Sign	EL	600 VA	
	360 VA	R	Receptacles: Apparatus Bay	12	20 A	15 16	20 A	12	Lighting: Exterior	EL	52 VA	
	540 VA	R	Receptacles: Apparatus Bay	12	20 A	17 18	20 A	12	Receptacle: Elevator Pit	L; R	244 VA	
	1200 VA	M	Cord Reel: Apparatus Bay	12	20 A	19 20	20 A	12	FACP: Electrical 107	M	500 VA	1
	1200 VA	M	Cord Reel: Apparatus Bay	12	20 A	21 22	20 A	12	Lighting Relay Panel	M	500 VA	
2 4	2400 VA	M	Cord Reel: Apparatus Bay	12	20 A	23 24	20 A	12	Receptacles: Electrical 107	R	540 VA	
	360 VA	M	Vestibule Call-Box	12	20 A	25 26	20 A	12	Washer: Utility 112	R	180 VA	
	--	--	Spare	--	20 A	27 28						
	720 VA	R	Receptacles: Utility 112	12	20 A	29 30	30 A	10	Dryer: Utility 112	M	2000 VA	
	1000 VA	R	Treadmill: Exercise 115	12	20 A	31 32	20 A	12	Receptacles: Entry 101	R	720 VA	
	1000 VA	R	Treadmill: Exercise 115	12	20 A	33 34	20 A	12	Computers: Office 110	R	1080 VA	
	1000 VA	R	Treadmill: Exercise 115	12	20 A	35 36	20 A	12	Receptacles: Office 110	R	540 VA	
	1000 VA	R	Stair Climber: Exercise 115	12	20 A	37 38	20 A	12	Printer: Air Lock 113	R	180 VA	
	1000 VA	R	Stair Climber: Exercise 115	12	20 A	39 40	20 A	12	Zetron Power: Air Lock 113	R	180 VA	
	360 VA	M	TV: Exercise 115	12	20 A	41 42	20 A	12	Receptacles: Shop 105	R	360 VA	
	360 VA	M	TV: Exercise 115	12	20 A	43 44	20 A	12	R Room 124, 109	R	540 VA	
	720 VA	R	Receptacles: Exercise 115	12	20 A	45 46	20 A	12	Receptacles: Shop 105	R	360 VA	
	--	--	Spare	--	20 A	47 48	20 A	12	Fire/Smoke Damper	M	180 VA	
	--	--	Space	--	--	49 50	--	--	Space	--	--	
	--	--	Space	--	--	51 52	--	--	Space	--	--	
	--	--	Space	--	--	53 54	--	--	Space	--	--	

N.E.C. (2017)	Load Type	Conn.	Fct.	Diversity	N.E.C.(2017)	Load Type	Conn.	Fct.	Diversity
220.44	(R)Receptacle	15260 VA	82.77%	12630 VA	210.20(a)	(L)Lighting	1774 VA	125.00%	2218 VA
220.56	(K)Kitchen					(EL)Ext. Ltg.	1096 VA	125.00%	1370 VA
220.60	(C)Cooling			0 VA	620.14	(E)Elevators			
220.60	(H)Heating			0 VA		(WH)Wat. Htr.			
220.60	(F)Fans				220.5	(MT)Lrg. Motor			
	(M)Misc.	8560 VA	100.00%	8560 VA		(SP)Sub Pnl.			

Total Connected Load: 26690 VA VA = 74 A
Total Load (Diversified): 24778 VA VA = 69 A

Location of Panel: ELECTRICAL 107

Panelboard L1B

22000 AIC Rating
X New
Existing

120/208 Wye Volt, 3 Phase, 4 Wire
1 Section
Type 1 -Nema Rating

Mains Type: MLO

0 A MCB
225 A BUS (Copper)
ISO. GRND. BUS

X Single
Double
Feed - Thru

Mounting
X Surface
Flush

Note	Load...	Type	Description	Wire	CB	CKT	CB	Wire	Description	Type	Load...	N...
	700 VA	M	Security Gate/Card Reader	12	20 A	1 2						
	700 VA	M	Security Gate/Card Reader	12	20 A	3 4	30 A	10	Generator Jacket Heater	H	4000 VA	
	141 VA	F	Exhaust Fan: EF-1	12	20 A	5 6	20 A	12	Generator Condensation Heater	M	1000 VA	
	696 VA	F	Exhaust Fan: EF-2	12	20 A	7 8	20 A	12	Generator Battery Charger	M	1200 VA	
	141 VA	F	Exhaust Fan: EF-3	12	15 A	9 10	20 A	--	Spare	--	--	
	180 VA	F	Exhaust Fan: EF-4	12	15 A	11 12	20 A	--	Spare	--	--	
	500 VA	M	Folding Bay Door Controller	12	20 A	13 14	20 A	12	Elevator Sump Pump	MT	1176 VA	
	3000 VA	MT	Folding Bay Door	12	15 A	15 16	25 A	10	Unit Heater: EUH-1	H	3750 VA	
						17 18						
						19 20	20 A	12	Unit Heater: EUH-2	H	3750 VA	
	3000 VA	MT	Folding Bay Door	12	15 A	21 22						
						23 24						
	3000 VA	MT	Folding Bay Door	12	15 A	25 26	30 A	10	Fan/Coil: FCU-1	H	7664 VA	
						27 28						
	3000 VA	MT	Folding Bay Door	12	15 A	29 30	25 A	10	Fan/Coil: FCU-2	H	3588 VA	
						31 32						
	900 VA	F	Garage Exhaust Fan: GEF-1	12	15 A	33 34	30 A	10	Fan/Coil: FCU-3	H	7664 VA	
						35 36						
						37 38						
	900 VA	F	Garage Exhaust Fan: GEF-2	12	15 A	39 40	30 A	10	Fan/Coil: FCU-4	H	7664 VA	
						41 42						
						43 44						
	500 VA	M	Exhaust Fan EF-7 Controller	12	20 A	45 46	60 A	6	Washer/Extractor: Utility 112	MT	10800 VA	
	430 VA	MT; M	Circulation Pump CP-1: Utility 112	12	15 A	47 48						
	180 VA	M	Ice Machine: Utility 112	12	20 A	49 50	--	--	Space	--	--	
	--	--	Space	--	--	51 52	--	--	Space	--	--	
	--	--	Space	--	--	53 54	--	--	Space	--	--	

N.E.C. (2017)	Load Type	Conn.	Fct.	Diversity	N.E.C.(2017)	Load Type	Conn.	Fct.	Diversity
220.44	(R)Receptacle				210.20(a)	(L)Lighting			
220.56	(K)Kitchen					(EL)Ext. Ltg.			
220.60	(C)Cooling			0 VA	620.14	(E)Elevators			
220.60	(H)Heating	38080 VA	100.00%	38080 VA		(WH)Wat. Htr.			
220.60	(F)Fans	1158 VA	100.00%	1158 VA	220.5	(MT)Lrg. Motor	12226 VA	122.08%	14926 VA
	(M)Misc.	4960 VA	100.00%	4960 VA		(SP)Sub Pnl.			

Total Connected Load: 56424 VA VA = 157 A
Total Load (Diversified): 59124 VA VA = 164 A

Location of Panel: ELECTRICAL 107

Panelboard L2A

22000 AIC Rating
X New
Existing

120/208 Wye Volt, 3 Phase, 4 Wire
1 Section
Type 1 -Nema Rating

Mains Type: MLO

0 A MCB
225 A BUS (Copper)
ISO. GRND. BUS

X Single
Double
Feed - Thru

Mounting
Surface
X Flush

Note	Load...	Type	Description	Wire	CB	CKT	CB	Wire	Description	Type	Load...	N...
	1080 VA	R	Receptacles: Dorms 1 & 2	12	20 A	1 2	20 A	12	Lighting: Corridor/Stairs/Pantry	L	1637 VA	
	1080 VA	R	Receptacles: Dorms 3 & 4	12	20 A	3 4	20 A	12	Lighting: Sleeping Units	L	748 VA	
	1080 VA	R	Receptacles: Dorms 5 & 6	12	20 A	5 6	20 A	12	Lighting: Kitchen/Dining/Day Rm	L	1017 VA	
	540 VA	R	Receptacles: Dorm 7	12	20 A	7 8	20 A	12	Lighting: Apparatus Bay	L	339 VA	
	360 VA	R	Receptacles: RR 207 & 208	12	20 A	9 10	20 A	12	Lighting: Apparatus Bay	L	765 VA	
	360 VA	R	Receptacles: RR 202 & 206	12	20 A	11 12	20 A	12	Lighting: Apparatus Bay	L	765 VA	
	240 VA	R	RR Exhaust Fans	12	20 A	13 14	15 A	12	Circulation Pump CP-1: Utility 213	MT; M	430 VA	
	180 VA	R	Receptacle: Patio 224	12	20 A	15 16	20 A	12	Receptacles: Repelling Area	R	540 VA	
	180 VA	R	Kitchen: Appliance #1	12	20 A	17 18	20 A	12	Receptacles: Utility 213	R	720 VA	
	180 VA	R	Kitchen: Appliance #2	12	20 A	19 20	20 A	12	Receptacle: Utility 213	R	180 VA	
	180 VA	R	Kitchen: Appliance #3	12	20 A	21 22	20 A	12	Washer: Utility 213	R	1200 VA	
	180 VA	R	Kitchen: Appliance #4	12	20 A	23 24	20 A	12	Dryer: Utility 213	M	180 VA	
	360 VA	R	Receptacles: Kitchen 222	12	20 A	25 26						
	500 VA	M	Range Hood	12	20 A	27 28	50 A	8	Electric Range	M	6000 VA	
	540 VA	M	Fire Suppression System	12	20 A	29 30						
	540 VA	R	Receptacles: Day Room 215	12	20 A	31 32	20 A	12	Refrigerator: Pantry 3	R	1200 VA	
	360 VA	M	TV: Day Room 215	12	20 A	33 34	20 A	12	Refrigerator: Pantry 3	R	1200 VA	
	1080 VA	R	Computers: Work Stations 216	12	20 A	35 36	20 A	12	Refrigerator: Pantry 2	R	1200 VA	
	360 VA	R	Receptacles: Work Stations 216	12	20 A	37 38	20 A	12	Refrigerator: Pantry 2	R	1200 VA	
	720 VA	R	Receptacles: Hallways	12	20 A	39 40	20 A	12	Refrigerator: Pantry 1	R	1200 VA	
	540 VA	R	Receptacles: IT 214	12	20 A	41 42	20 A	12	Refrigerator: Pantry 1	R	1200 VA	
	360 VA	R	IT Receptacle: IT 214	12	20 A	43 44	20 A	--	Spare	--	--	
	2000 VA	M	IT Receptacle: IT 214	10	30 A	45 46	20 A	--	Spare	--	--	
						47 48	20 A	--	Spare	--	--	
	--	--	Space	--	--	49 50						
	--	--	Space	--	--	51 52	30 A	10	SPD2	SP	0 VA	
	--	--	Space	--	--	53 54						

N.E.C. (2017)	Load Type	Conn.	Fct.	Diversity	N.E.C.(2017)	Load Type	Conn.	Fct.	Diversity
220.44	(R)Receptacle	19440 VA	75.72%	14720 VA	210.20(a)	(L)Lighting	5271 VA	125.00%	6589 VA
220.56	(K)Kitchen					(EL)Ext. Ltg.			
220.60	(C)Cooling			0 VA	620.14	(E)Elevators			
220.60	(H)Heating			0 VA		(WH)Wat. Htr.			
220.60	(F)Fans				220.5	(MT)Lrg. Motor	250 VA	125.00%	313 VA
	(M)Misc.	9760 VA	100.00%	9760 VA		(SP)Sub Pnl.	0 VA	Not Computed	0 VA

Total Connected Load: 34721 VA VA = 96 A
Total Load (Diversified): 31382 VA VA = 87 A

Location of Panel: UTILITY 213

Panelboard L2B

22000 AIC Rating
X New
Existing

120/208 Wye Volt, 3 Phase, 4 Wire
1 Section
Type 1 -Nema Rating

Mains Type: MLO

100 A MCB
100 A BUS (Copper)
ISO. GRND. BUS

X Single
Double
Feed - Thru

Mounting
Surface
X Flush

Note	Load...	Type	Description	Wire	CB	CKT	CB	Wire	Description	Type	Load...	N...
	180 VA	C	VRV Branch Selector Box	12	15 A	1 2						
						3 4	15 A	12	Split System DS/DSCU-1	C	2521 VA	
	720 VA	C	VRF CC Units 1-8	12	20 A	5 6						
						7 8						
	8214 VA	C	VRF-CU-1	8	40 A	9 10	25 A	10	Condensing Unit ACCU-1	C	3840 VA	
						11 12						
						13 14	20 A	12	Condensing Unit ACCU-2	C	3570 VA	
	240 VA	F	Exhaust Fan: EF-5	12	20 A	15 16						
	240 VA	F	Exhaust Fan: EF-6	12	15 A	17 18	20 A	12	Condensing Unit ACCU-3	C	3570 VA	
	360 VA	H	Infrared Heater IRH-1	12	20 A	19 20						
	360 VA	H	Infrared Heater IRH-2	12	20 A	21 22	20 A	--	Spare	--	--	
	360 VA	H	Infrared Heater IRH-3	12	20 A	23 24	20 A	--	Spare	--	--	
	360 VA	H	Infrared Heater IRH-4	12	20 A	25 26						
	800 VA	M	Elevator Cab...	12	20 A	27 28	25 A	10	Condensing Unit ACCU-4	C	3840 VA	
	--	--	Spare	--	20 A	29 30						
						31 32						
	7664 VA	H	Fan/Coil: FCU-5	10	30 A	33 34	25 A	10	Condensing Unit ACCU-5	C	3840 VA	
						35 36						
						37 38						
	7664 VA	H	Fan/Coil: FCU-6	10	30 A	39 40	25 A	10	Condensing Unit ACCU-6	C	3840 VA	
						41 42						
	--	--	Spare	--	20 A	43 44	20 A	--	Spare	--	--	
	--	--	Spare	--	20 A	45 46	20 A	--	Spare	--	--	
	--	--	Spare	--	20 A	47 48	20 A	--	Spare	--	--	
	--	--	Spare	--	20 A	49 50						
	--	--	Spare	--	20 A	51 52	30 A	10	SPD2	SP	0 VA	
	--	--	Spare	--	20 A	53 54						

N.E.C. (2017)	Load Type	Conn.	Fct.	Diversity	N.E.C.(2017)	Load Type	Conn.	Fct.	Diversity
220.44	(R)Receptacle				210.20(a)	(L)Lighting			
220.56	(K)Kitchen					(EL)Ext. Ltg.			
220.60	(C)Cooling	38442 VA	100.00%	38442 VA	620.14	(E)Elevators			
220.60	(H)Heating	16768 VA	100.00%	0 VA		(WH)Wat. Htr.			
220.60	(F)Fans	480 VA	100.00%	480 VA	220.5	(MT)Lrg. Motor			
	(M)Misc.	800 VA	100.00%	800 VA		(SP)Sub Pnl.	0 VA	Not Computed	0 VA

Total Connected Load: 55096 VA VA = 153 A
Total Load (Diversified): 38328 VA VA = 106 A

Location of Panel: UTILITY 213

PANEL SCHEDULE NOTES

1. PROVIDE HANDLE TIE FOR FIRE ALARM CONTROL PANEL.
2. PROVIDE GFI CIRCUIT BREAKER FOR APPLIANCE CIRCUIT.

DBR
9601 McAllister Freeway, Suite 410
San Antonio, Texas 78216
210.546.0200 p
210.546.0201 f
TBPE Firm Registration No. 2234

DBR Project Number 196023.000

JC	BV	DA	WJ	JC

PROFESSIONAL SEAL

STATE OF TEXAS
M. JACQUELINE CHANG
124987
LICENSED
PROFESSIONAL ENGINEER
04/20/2020

LOGO/CONTACT

martinez ARCHITECTS

Martinez Architect, LP
900 Rockmead, Suite 250
Houston, Texas 77339
281.346.7371

DESIGN TEAM

Architectural
Martinez Architects

Civil Engineer
Maverick Engineering

Structural
Matrix Structural engineers

MEP/FP/T
DBR

Landscape Architect
KDC Associates

FIRE STATION #5

CITY OF MIDLAND
2200 W GOLF COURSE RD
MIDLAND, TX 79701

PROJECT No: **MA 18017**
DATE: **01/30/2020**

No.	Date	Description
1	01/30/2020	100% CD
2	02/20/2020	Addendum 02

ELECTRICAL SCHEDULES

E502

4.1639

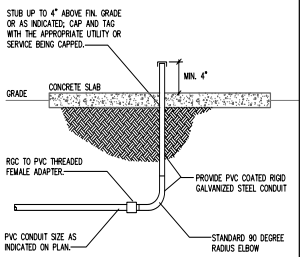

1 CONDUIT STUB UP AND CAP DETAIL
NOT TO SCALE

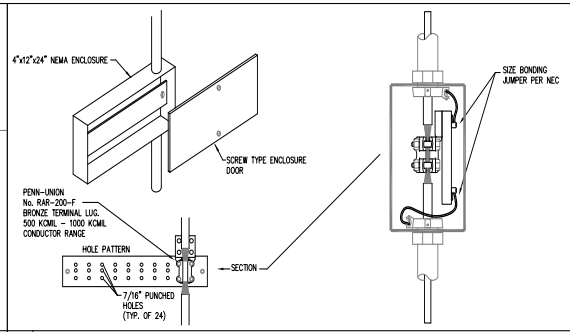

2 TYPICAL GROUNDING BUS DETAIL
NOT TO SCALE

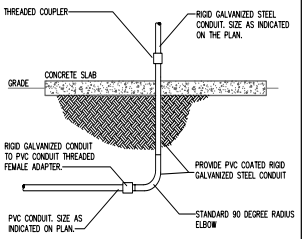

3 CONDUIT STUB UP DETAIL
NOT TO SCALE

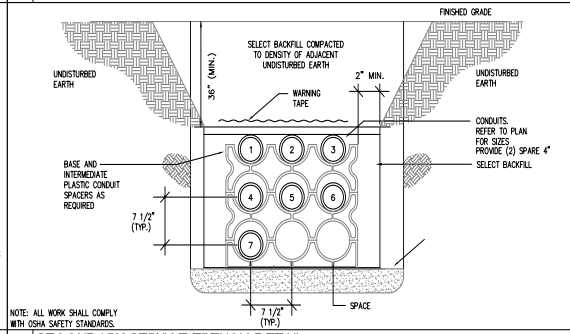

4 SECONDARY SERVICE TRENCH DETAIL
NOT TO SCALE

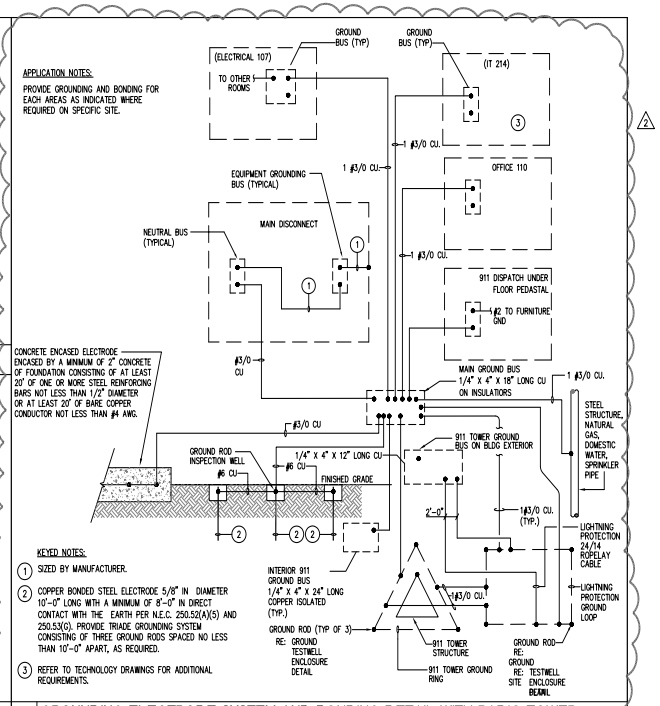

5 GROUNDING ELECTRODE SYSTEM AND BONDING DETAIL WITH RADIO TOWER
NOT TO SCALE

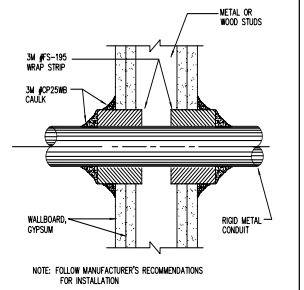

6 1 AND 2 HR. GYPSUM/WALLBOARD PIPE PENETRATION
NOT TO SCALE

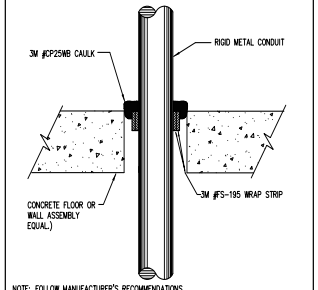

7 2, 3 AND 4 HR. PENETRATIONS FOR CONCRETE FLOOR AND WALL
NOT TO SCALE

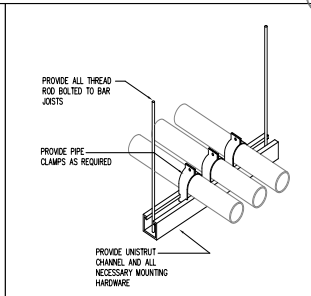

8 UNISTRUT CONDUIT DETAIL
NOT TO SCALE

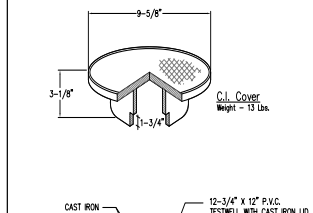

12 GROUND TESTWELL ENCLOSURE
NOT TO SCALE (FOR ALL GROUND RODS)

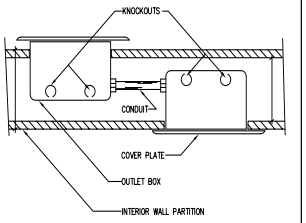

9 BACK-TO-BACK OUTLETS
NOT TO SCALE

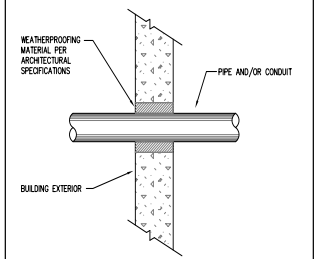

10 PIPE AND/OR CONDUIT PENETRATION
NOT TO SCALE

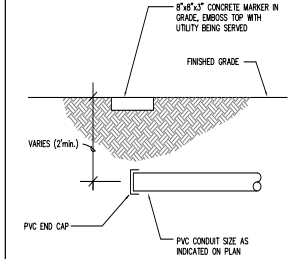

11 CAP AND STAKE DETAIL
NOT TO SCALE

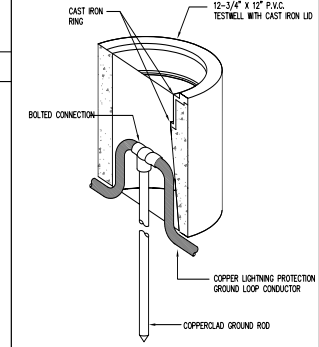

DBR
9601 McAllister Freeway, Suite 410
San Antonio, Texas 78216
210.546.0200 v 210.546.0201 f
TBPE Firm Registration NO. 2234

DBR Project Number 196023.000

JC	BV	DA	WJ	JC

PROFESSIONAL SEAL

STATE OF TEXAS
M. JACQUELINE CHANG
124987
LICENSED
PROFESSIONAL ENGINEER
02/20/2020

LOGO/CONTACT

martinez ARCHITECTS

Martinez Architect, LP
900 Rockmead, Suite 250
Houston, Texas 77339
281.346.7371

DESIGN TEAM

Architectural
Martinez Architects

Civil Engineer
Maverick Engineering

Structural
Matrix Structural Engineers

M/E/P/T
DBR

Landscaping
KDC Associates

FIRE STATION #5

CITY OF MIDLAND
2200 W GOLF COURSE RD
MIDLAND, TX 79701

PROJECT No: MA 18017
DATE: 01/30/2020

No.	Date	Description
1	01/30/2020	100% CD
2	02/20/2020	Addendum 02

ELECTRICAL DETAILS

E601

4.1640

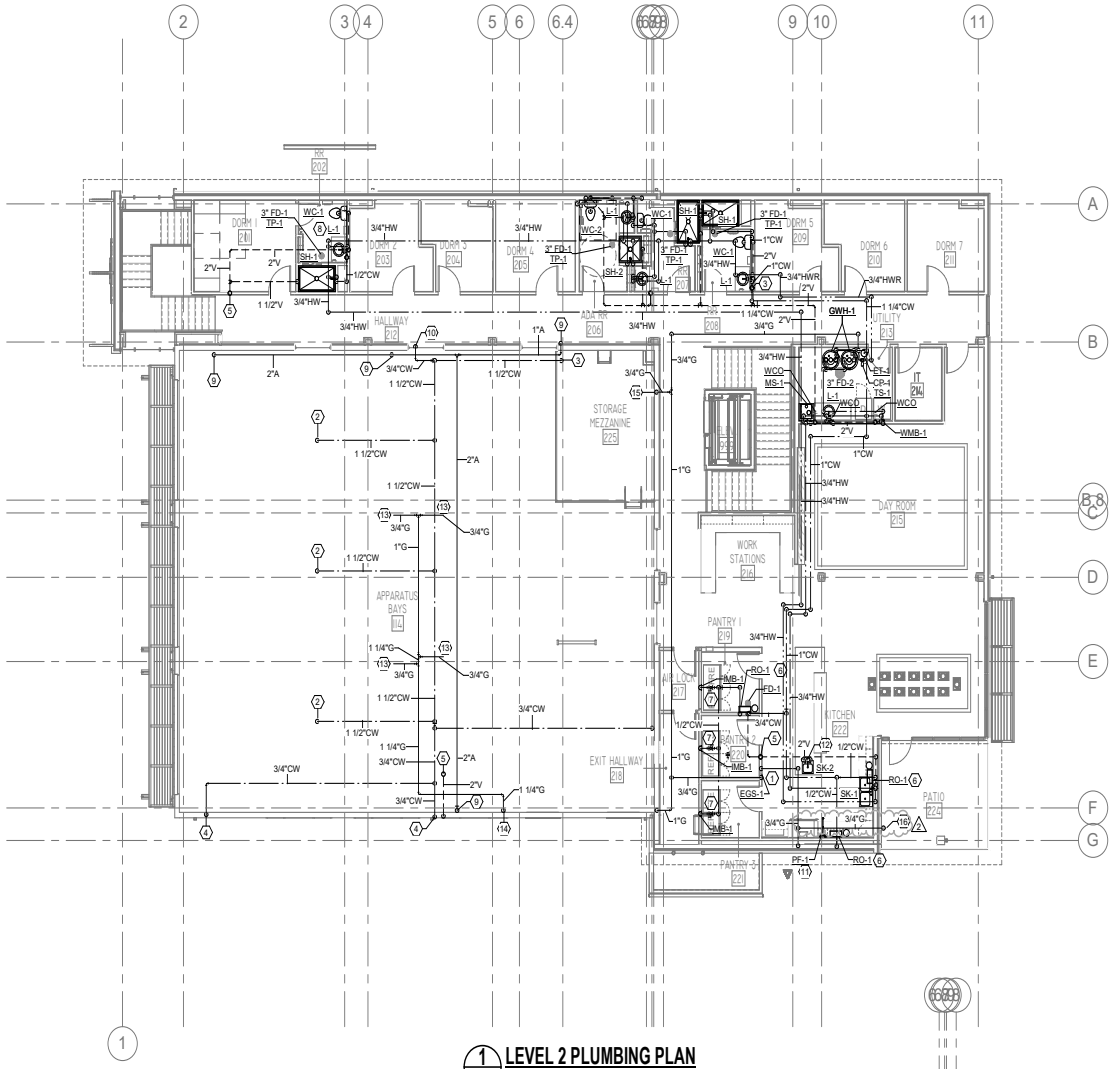

1 LEVEL 2 PLUMBING PLAN
P212 — 1/8" = 1'-0"

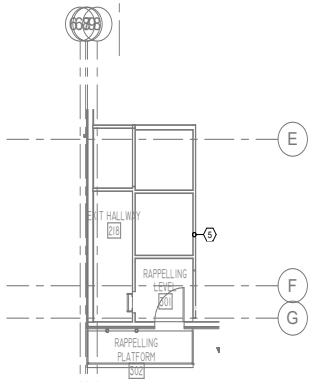

2 LEVEL 3 PLUMBING PLAN
P212 — 1/8" = 1'-0"

GENERAL PLUMBING NOTES

A ALL WORK, METHODS AND INSTALLATIONS INVOLVED IN THE PLUMBING DESIGN SHALL BE IN ACCORDANCE WITH THE PREVAILING BUILDING CODES AND INSPECTION REGULATIONS AND ALL OTHER OFFICIALS HAVING JURISDICTION.

B PRIOR TO CONSTRUCTION, THE CONTRACTOR IS RESPONSIBLE FOR OBTAINING A COPY OF THE OWNER'S MOST RECENT STANDARDS AND REQUIREMENTS FOR CONSTRUCTION. ALL WORK SHALL BE PERFORMED IN ACCORDANCE WITH SUCH REQUIREMENTS, UNLESS THE PREVAILING CODE OR THESE DOCUMENTS INDICATE A HIGHER STANDARD, WHICH SHALL GOVERN.

C COORDINATE ROUTING OF PIPING IN CEILING SPACES WITH MECHANICAL AND ELECTRICAL EQUIPMENT, DUCTWORK AND CONDUIT. NOTIFY THE ARCHITECT/ENGINEER OF ANY CONFLICTS PRIOR TO INSTALLING AN ALTERNATE PIPING PLAN.

D DO NOT ROUGH-IN FOR FIXTURES FROM THESE DRAWINGS. REFER TO LATEST ARCHITECTURAL DRAWINGS FOR DIMENSIONED LOCATIONS.

E ALL PLUMBING FIXTURE AND DEVICE LOCATIONS AND MOUNTING HEIGHTS SHALL BE COORDINATED IN ADVANCE WITH CASEWORK, MILLWORK, ETC.

F COORDINATE FIXTURE AND EQUIPMENT LOCATIONS AND CONNECTION REQUIREMENTS WITH LATEST ARCHITECTURAL DRAWINGS, SPECIFICATIONS, AND MANUFACTURER RECOMMENDATIONS PRIOR TO ANY ROUGH-INS.

G PROVIDE CLEANOUTS, POINT OF USE WATER HEATERS, WATER FILTERS, ETC. IN ACCESSIBLE, BUT NOT IMMEDIATELY VISIBLE LOCATIONS. REFER TO AND COORDINATE WITH ARCHITECTURAL DRAWINGS FOR DIMENSIONS AND DETAILS OF SINK SKIRTS, ADA PANELS, AND MILLWORK.

H ALL PIPING SHALL BE ROUTED CONCEALED FROM PUBLIC VIEW.

J ENSURE THAT PIPING ROUTED IN CEILING SPACE IS AT AN ELEVATION ABOVE THE TOP OF WINDOW FRAME HEADS. ENSURE THAT PIPING ROUTED LOW INSIDE WALLS IS BELOW THE ELEVATION OF WINDOW SILLS. PROVIDE OFFSETS IN PIPING AS REQUIRED.

K ALL VALVES, EQUIPMENT, AND OPERABLE APPURTENANCES SHALL BE LOCATED FREE FROM OBSTRUCTIONS FOR FULL OPERABILITY AND MAINTENANCE ACCESS.

L ALL PIPIING PROVIDED WITHIN RETURN AIR CEILING SPACES SHALL BE PLENUM RATED.

M INSTALLATIONS WHICH DO NOT ADHERE TO THE REQUIREMENTS INDICATED WITHIN THE CONTRACT DOCUMENTS OR WHICH ARE INCORECT DUE TO LACK OF FIELD COORDINATION, ETC. SHALL BE CORRECTED SOLELY AT THE CONTRACTOR'S EXPENSE, WITH NO EXCEPTIONS.

N PROVIDE BALL VALVE SHUT-OFFS ON ALL DOMESTIC WATER BRANCH LINES WITHIN 24" OF THE CORRESPONDING MAIN.

P ALL DOMESTIC WATER AND SANITARY VENT LINES SERVING FIXTURE GROUPS SHALL HAVE A FULL SIZE HEADER THAT RUNS THE LENGTH OF THE CHASE/WALL SPACE FOR CONNECTION TO ALL FIXTURES. REFER TO PLANS FOR HEADER SIZES, WHICH MAY BE INDICATED BY THE VERTICAL DROP DOWN OR RISE UP FROM THE CHASE. REFER TO PLUMBING FIXTURE SCHEDULE FOR INDIVIDUAL FIXTURE ROUGH-IN CONNECTION SIZES TO HEADER.

Q VENT HEADERS WITHIN WALLS AND CHASES FOR MULTIPLE FIXTURES SHALL BE PROVIDED AT NO LESS THAN 6" ABOVE THE FLOOD RIM OF THE HIGHEST FIXTURE.

R FOR EACH FIXTURE INTENDED TO DRAIN INDIRECTLY, PROVIDE THE CODE REQUIRED INDIRECT WASTE PIPE (AND TRAP OR TRAP AND VENT, AS NECESSARY) TO ROUTE THE DRAIN LINE TO THE NEAREST APPROVED INDIRECT WASTE RECEPTOR WITHOUT POSING A TRIP HAZARD. IN FINISHED AREAS ALL SUCH DRAIN LINES SHALL BE CHROME PLATED CAST BRASS.

S FOR FLOOR MOUNTED WATER HEATERS AND SIMILAR EQUIPMENT, PROVIDE A RECTANGULAR SHAPED 4" THICK CONCRETE HOUSEKEEPING PAD EXTENDING TO BEYOND THE LIMITS OF THE EQUIPMENT FOOTPRINT.

T PROVIDE AN ACCESSIBLE WALL CLEANOUT AT THE BASE OF EACH SANITARY RISER.

U NO NATURAL GAS VALVES, UNIONS, OR REGULATORS SHALL BE PERMITTED TO BE INSTALLED ABOVE THE CEILING.

PLUMBING KEYED NOTES

1. EMERGENCY GAS SHUT-OFF FOR KITCHEN EQUIPMENT (EGS-1). COORDINATE WITH ELECTRICAL. PROVIDE SOLENOID VALVE, RE: 11/P601.
2. 1-1/2" WATER FILL. VALVE AND CAP DROP FOR OWNER INSTALLED EQUIPMENT.
3. 1-1/2" COLD WATER FROM BELOW.
4. COLD WATER DOWN.
5. 2" VENT UP TO ROOF.
6. RO SYSTEM AND STORAGE TANK (RO-1). ROUTE FILTERED WATER TO FIXTURES (PF-1/SK-1/SK-2).
7. ROUTE FILTERED WATER FROM REVERSE OSMOSIS SYSTEM (RO-1) TO WALL BOXES SERVING PANTRY REFRIGERATORS.
8. PROVIDE Y-BRANCH TAIL PIECE FOR CONDENSATE CONNECTION. COORDINATE WITH MECHANICAL.
9. 1" COMPRESSED AIR DROP. SECURE VERTICAL PIPE TO WALL. VALVE AND CAP DROP FOR OWNER INSTALLED EQUIPMENT. VERIFY EXACT LOCATION AND HEIGHT WITH OWNER.
10. 3/4" COLD WATER DROP IN WALL BELOW WINDOW SILL AND DOWN TO HOSE BIBB.
11. ROUTE FILTERED WATER FROM RO-1 TO POT FILLER FIXTURE.
12. ISLAND WASTE/VENT ROUTED UNDER FLOOR TO WALL. RE: 11/P602.
13. 3/4" GAS TO INFRA-RED RADIANT HEATER. RE: M211.
14. 1-1/4" GAS DOWN IN WALL.
15. 1" GAS DOWN TO 1ST FLOOR.
16. 3/4" GAS THROUGH WALL AND DROP TO PATIO FOR BBQ GRILL(S). SLEEVE AT PENETRATION. REF: 14/P602. ROUTE PIPE TIGHT TO WALL. PROVIDE VALVE AND CAP AT DROP. PLUMBING

DBR
9601 McAllister Freeway, Suite 410
San Antonio, Texas 78216
210.546.0200 p
210.546.0201 f
TBPE Firm Registration No. 2234

DBR Project Number 196023.000

JC	BV	DA	WJ	JC

TRUE NORTH / PROJECT NORTH

PROFESSIONAL SEAL

STATE OF TEXAS — M. JACQUELINE CHANG — 124987 — LICENSED PROFESSIONAL ENGINEER — 01/30/2020

LOGO/CONTACT

martinez ARCHITECTS
Martinez Architect, LP
900 Rockmead, Suite 250
Houston, Texas 77339
281.346.7371

DESIGN TEAM

Architectural
Martinez Architects

Civil Engineer
Maverick Engineering

Structural
Matrix Structural engineers

MEP/FP/T
DBR

Landscape Architect
KDC Associates

FIRE STATION #5
CITY OF MIDLAND
2200 W GOLF COURSE RD
MIDLAND, TX 79701

PROJECT No: MA 18017
DATE: 01/30/2020

No.	Date	Description
1	01/30/2020	100% CD
2	02/20/2020	Addendum 02

LEVEL 2 & 3 PLUMBING PLAN

P212

4.1641

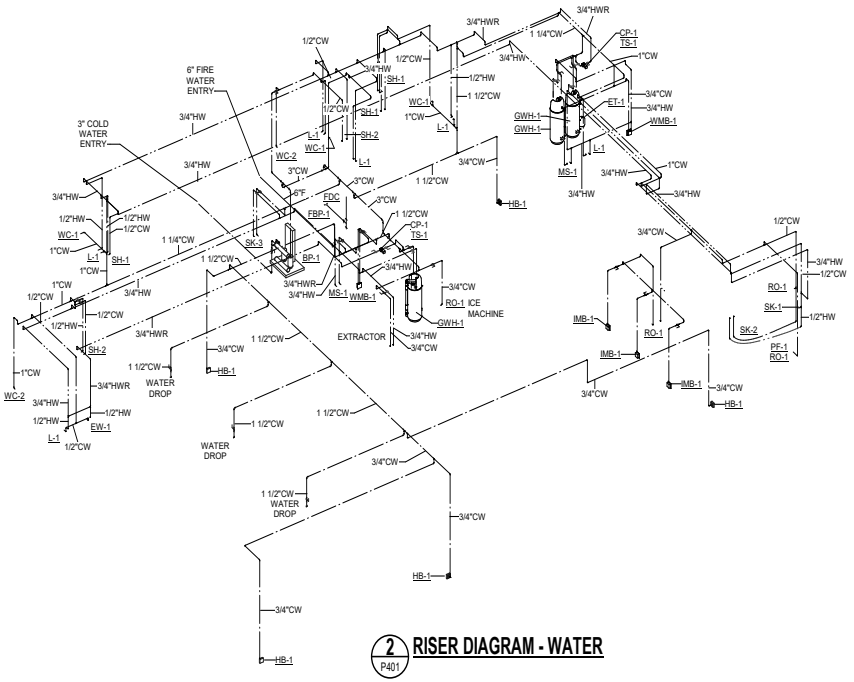

2 P401 **RISER DIAGRAM - WATER**

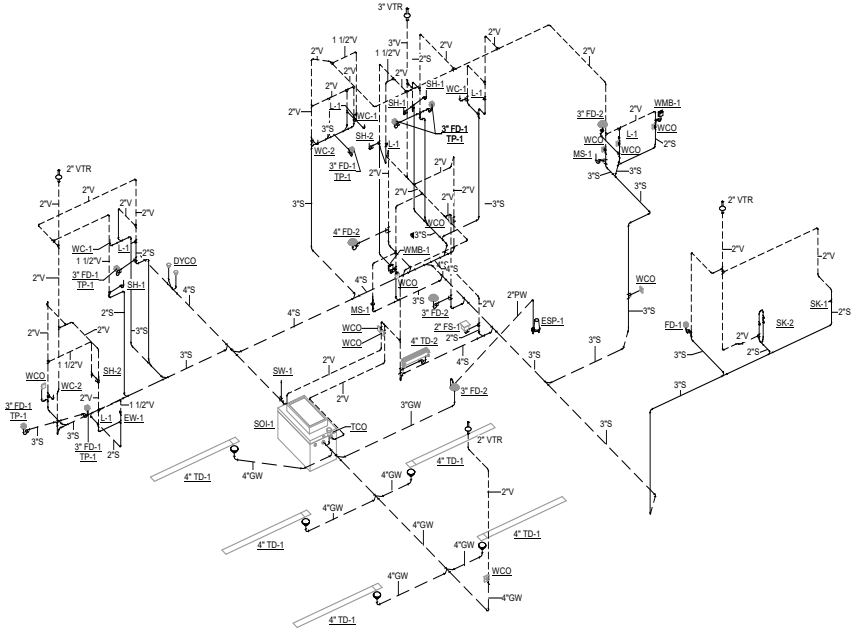

1 P401 **RISER DIAGRAM - SANITARY & VENT**

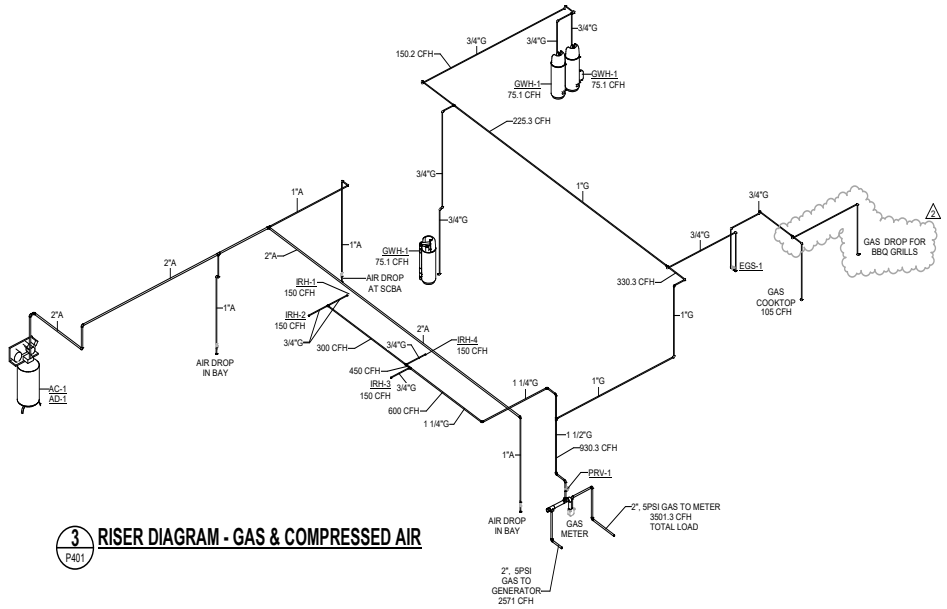

3 P401 **RISER DIAGRAM - GAS & COMPRESSED AIR**

DBR
9601 McAllister Freeway, Suite 410
San Antonio, Texas 78216
210.546.0200 p
210.546.0201 f
TBPE Firm Registration No. 2234

DBR Project Number 196023.000

JC	BV	DA	WJ	JC

PROFESSIONAL SEAL

STATE OF TEXAS
M. JACQUELINE CHANG
124987
LICENSED PROFESSIONAL ENGINEER
04/20/2020

LOGO/CONTACT

martinez ARCHITECTS

Martinez Architect, LP
900 Rockmead, Suite 250
Houston, Texas 77339
281.346.7371

DESIGN TEAM

Architectural
Martinez Architects

Civil Engineer
Maverick Engineering

Structural
Matrix Structural engineers

MEP/FP
DBR

Landscape Architect
KDC Associates

FIRE STATION #5

CITY OF MIDLAND
2200 W GOLF COURSE RD
MIDLAND, TX 79701

PROJECT No: **MA 18017**
DATE: **01/30/2020**

No.	Date	Description
1	01/30/2020	100% CD
2	02/20/2020	Addendum 02

PLUMBING RISER DIAGRAMS

P401

4.1642

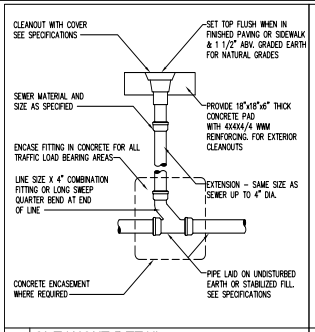

1 **CLEANOUT DETAIL**
NOT TO SCALE

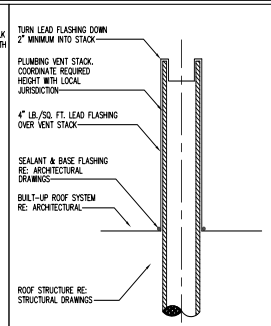

2 **VENT THRU ROOF**
NOT TO SCALE

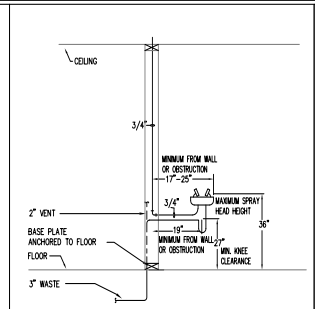

3 **EMERGENCY EYEWASH (EW-1)**
NOT TO SCALE

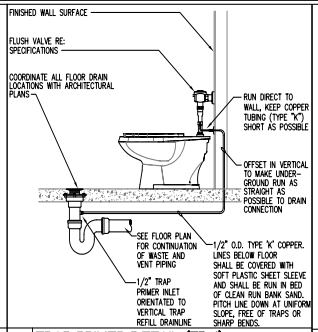

4 **TRAP PRIMER DETAIL (TP-1)**
NOT TO SCALE

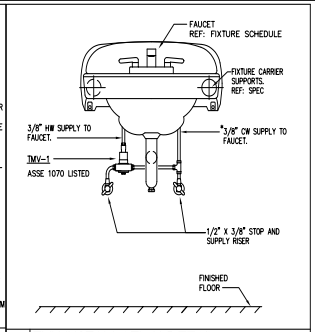

5 **TMV INSTALLATION DETAIL**
NOT TO SCALE

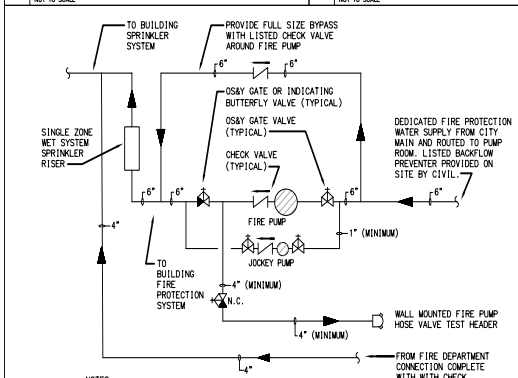

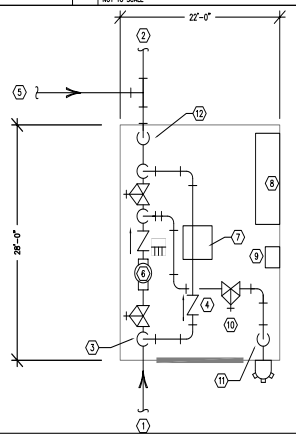

KEYED NOTES:

1. 6" FIRE PROTECTION WATER SERVICE ENTRY. BFP LOCATED OUTDOORS ON SITE.
2. FIRE SPRINKLER MAIN TO SERVE BUILDING FIRE SPRINKLER SYSTEM.
3. TEE OFF WITH FULL SIZE BYPASS LINE.
4. LISTED CHECK VALVE.
5. 4" LINE FROM FIRE DEPARTMENT CONNECTION. ALTERNATIVELY, FOR A SINGLE ZONE WET SYSTEM AS SHOWN, THE LINE CAN CONNECT ANYWHERE ON THE SYSTEM SIDE OF THE SYSTEM CONTROL, CHECK AND ALARM VALVES TO A LINE OF SUFFICIENT SIZE, PROVIDED IT IS NOT A BRANCH LINE.
6. 500 GALLON PER MINUTE VERTICAL INLINE FIRE PUMP.
7. 5 GALLON PER MINUTE JOCKEY PUMP.
8. FIRE PUMP CONTROLLER WITH AUTOMATIC TRANSFER SWITCH.
9. JOCKEY PUMP CONTROLLER.
10. NORMALLY CLOSED VALVE AND FIRE PUMP HOSE HEADER SUPPLY.
11. DROP DOWN AND ROUTE THROUGH WALL AND PROVIDE WALL MOUNTED FIRE PUMP HOSE VALVE TEST HEADER COMPLETE WITH A MINIMUM (2) 2-1/2" HOSE VALVES.
12. SPACE FOR FIRE SPRINKLER RISER WITH VALVES AND TRIM.

6 **FIRE PROTECTION SYSTEM SCHEMATIC (FBP-1)**
NOT TO SCALE

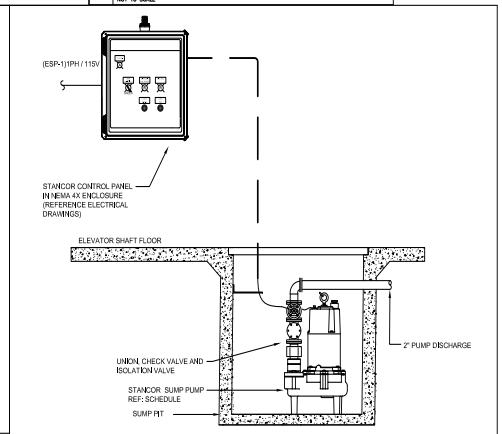

7 **ELEVATOR SUMP PUMP DETAIL (ESP-1)**
NOT TO SCALE

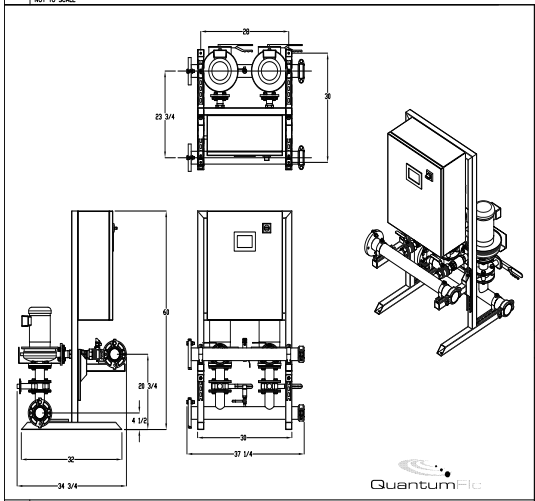

8 **BOOSTER PUMP DETAIL**
NOT TO SCALE

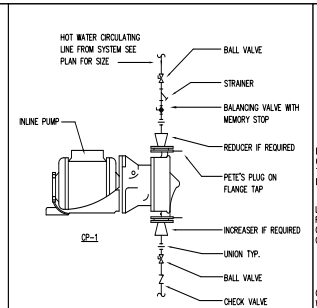

9 **IN-LINE CIRCULATING PUMP DETAIL (CP-1)**
NOT TO SCALE

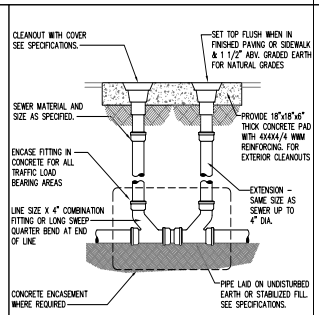

10 **DOUBLE YARD CLEAN-OUT (DYCO)**
NOT TO SCALE

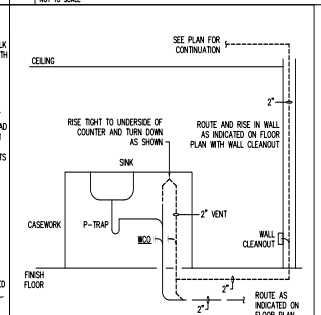

11 **ISLAND VENT DETAIL**
NOT TO SCALE

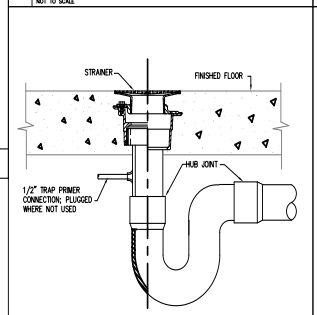

12 **FLOOR DRAIN DETAIL**
NOT TO SCALE

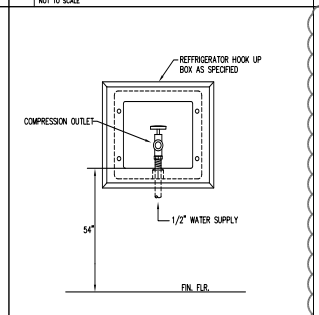

13 **WALL BOX DETAIL (IMB-1)**
NOT TO SCALE

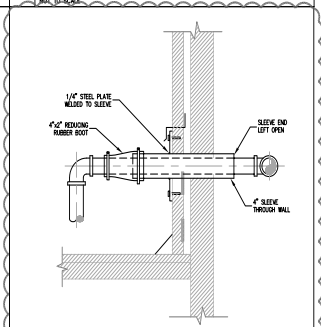

14 **GAS SLEEVE DETAIL**
NOT TO SCALE

DBR
9601 McAllister Freeway, Suite 410
San Antonio, Texas 78216
210.546.0200 v 210.546.0201 f
TBPE Firm Registration NO. 2234

DBR Project Number 196023.000

JC	BV	DA	WJ	JC

PROFESSIONAL SEAL

STATE OF TEXAS
M. JACQUELINE CHANG
124987
LICENSED PROFESSIONAL ENGINEER
02/20/2020

LOGO/CONTACT

martinez ARCHITECTS

Martinez Architect, LP
900 Rockmead, Suite 250
Houston, Texas 77339
281.346.7371

DESIGN TEAM

Architectural
Martinez Architects

Civil Engineer
Maverick Engineering

Structural
Matrix Structural Engineers

M/E/P/T
DBR

Landscaping
KDC Associates

FIRE STATION #5

CITY OF MIDLAND
2200 W GOLF COURSE RD
MIDLAND, TX 79701

PROJECT No: MA 18017
DATE: 01/30/2020

No.	Date	Description
1	01/30/2020	100% CD
2	02/20/2020	Addendum 02

PLUMBING DETAILS

P602

4.1643

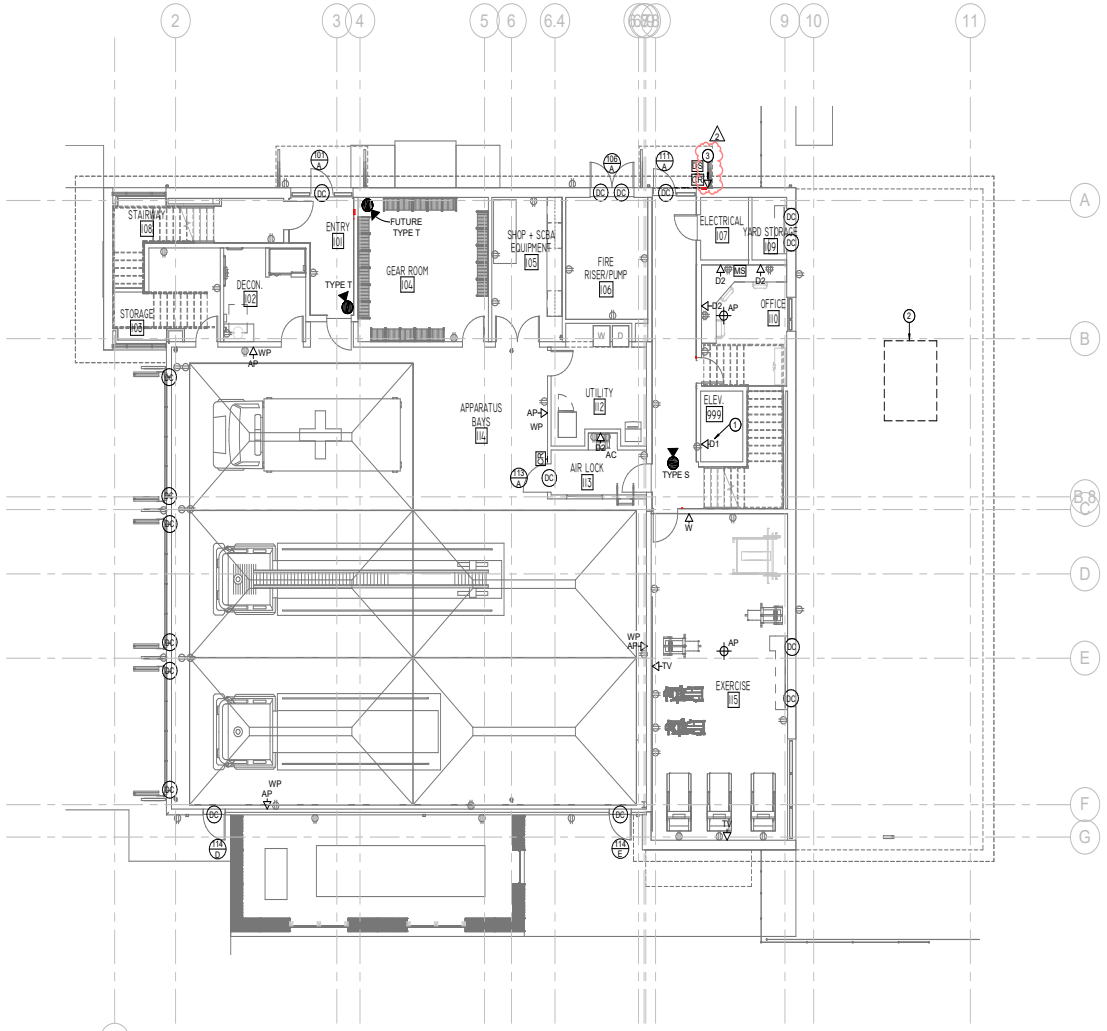

1 TS211 **LEVEL 1 LOW VOLTAGE PLAN**
1/8" = 1'-0"

LOW VOLTAGE GENERAL NOTES

A. REFERENCE NOTES AND LEGENDS AND SPECIFICATION FOR MATERIALS AND METHODS.

B. REFERENCE SHEET TX.X FOR NOTES AND SYMBOL LEGENDS

C. REFERENCE SHEET TSSXX SERIES FOR DETAILS.

LOW VOLTAGE KEYED NOTES

1. THE DESIGNATED TELEPHONE OUTLET SHALL BE RESERVED FOR THE ELEVATOR EMERGENCY CALL. CONTRACTOR TO ROUTE A CABLE FROM THE NEAREST MDF/IDF, TO THE ELEVATOR CONTROL EQUIPMENT. TERMINATE THE CABLE AT THE ELEVATOR EQUIPMENT AND CROSS-CONNECT TO THE TELEPHONE TRAVEL CABLE. COORDINATE EXACT LOCATION, TERMINATION, AND CROSS-CONNECT WITH THE ELEVATOR INSTALLER.
2. INICATES THE APPROXIMATE LOCATION OF THE BUILDING IT ROOM 214 LOCATED ON LEVEL 2.
3. INDICATES THE LOCATION OF A 911 CALL BOX. CONTRACTOR PROVIDED AND INSTALL ONE (1) CATEGORY 6 CABLE TO THIS LOCATION. POINT PRIOR TO INSTALLATION. 911 BOX AND PHONE TO BE PROVIDED AND INSTALLED BY OTHERS.

TRUE NORTH / PROJECT NORTH

DBR
9601 McAllister Freeway, Suite 410
San Antonio, Texas 78216
210.546.0200 v 210.546.0201 f
TBPE Firm Registration No. 2234

DBR Project Number 196023.000

JC | BV | CL | WJ | JC

PROFESSIONAL SEAL

REGISTERED COMMUNICATIONS DISTRIBUTION DESIGNER
Bicsi
Weifang Wang
BICSI ID # 165482
Expires: 01-31-21
02/20/2020

martinez ARCHITECTS
Martinez Architect, LP
900 Rockmead, Suite 250
Houston, Texas 77339
281.346.7371

DESIGN TEAM

Architectural
Martinez Architects

Civil Engineer
Maverick Engineering

Structural
Matrix Structural engineers

MIE/P/T
DBR

Landscape Architect
KDC Associates

FIRE STATION #5

CITY OF MIDLAND
2200 W GOLF COURSE RD
MIDLAND, TX 79701

PROJECT No: **MA 18017**
DATE: **01/30/2020**

No.	Date	Description
1	01/30/2020	100% CD
2	02/20/2020	Addendum 02

LEVEL 1 LOW VOLTAGE PLAN

TS211

4.1644

NOTE:
1. PAD SIZE IS DETERMINED BY SIZE OF EQUIPMENT BEING WASHED PLUS ACCESS

2. LOCATE IN EQUIPMENT ROOM OR AT EDGE OF PAD

BASIN OPTIONS:
2'x2'x3' PN. 8.709-334.0
COVER PN. 8.903-675.0 (NOT RATED FOR DRIVING OVER)
GRATE PN. 8.903-676.0 (RATED H-20 TRUCK LOAD)

3'x3'x4.5' PN. 8.903-658.0
COVER PN. 8.903-678.0 (NOT RATED FOR DRIVING OVER)
GRATE PN. 8.903-677.0 (RATED H-20 TRUCK LOAD)

3. TRENCH DRAINS (DRY TYPE)
A PROPERLY DESIGNED TRENCH DRAIN WILL CONSIDER AND /OR INCORPORATE THE FOLLOWING:
*THE AMOUNT OF SOLIDS THAT WILL BE ACCUMULATED ON A ROUTINE BASIS.
*THE FREQUENCY AND / OR COMMITMENT FOR CLEANING OUT THE TRENCH DRAIN SYSTEM. NOTE- SOLIDS SHOULD BE ROUTINELY REMOVED (E.G. AT LEAST EVERY 2 TO 4 WEEKS)
*THE TOOL OR MACHINERY THAT WILL BE UTILIZED DURING CLEAN-OUT. NOTE- THE WIDTH OF THE TRENCH SHOULD BE ONLY A FEW INCHES WIDER THAN THE WIDTH OF THE TOOL.
*THE TRENCH SHOULD BE SLOPED FROM ONE END TO THE OTHER ABOUT 2% (1/4" TO 1/3" PER FOOT OF LENGTH)
*STANDING VERTICAL WEIRS SHOULD BE PLACED ACROSS THE WIDTH OF THE TRENCH TO HOLD BACK SOLIDS, BUT WILL ALLOW WATER TO MOVE DOWN-STREAM. NOTE- THE WEIRS SHOULD BE ABOUT 1/4" SHORTER THAN THE WIDTH OF THE TRENCH.
*NO STANDING WATER SHOULD BE ALLOWED TO ACCUMULATE IN THE TRENCH.
*THE WATER SHOULD FALL INTO THE DEEP END OF THE TRENCH, THEN INTO A CATCH BASIN AND A SUMP BASIN.

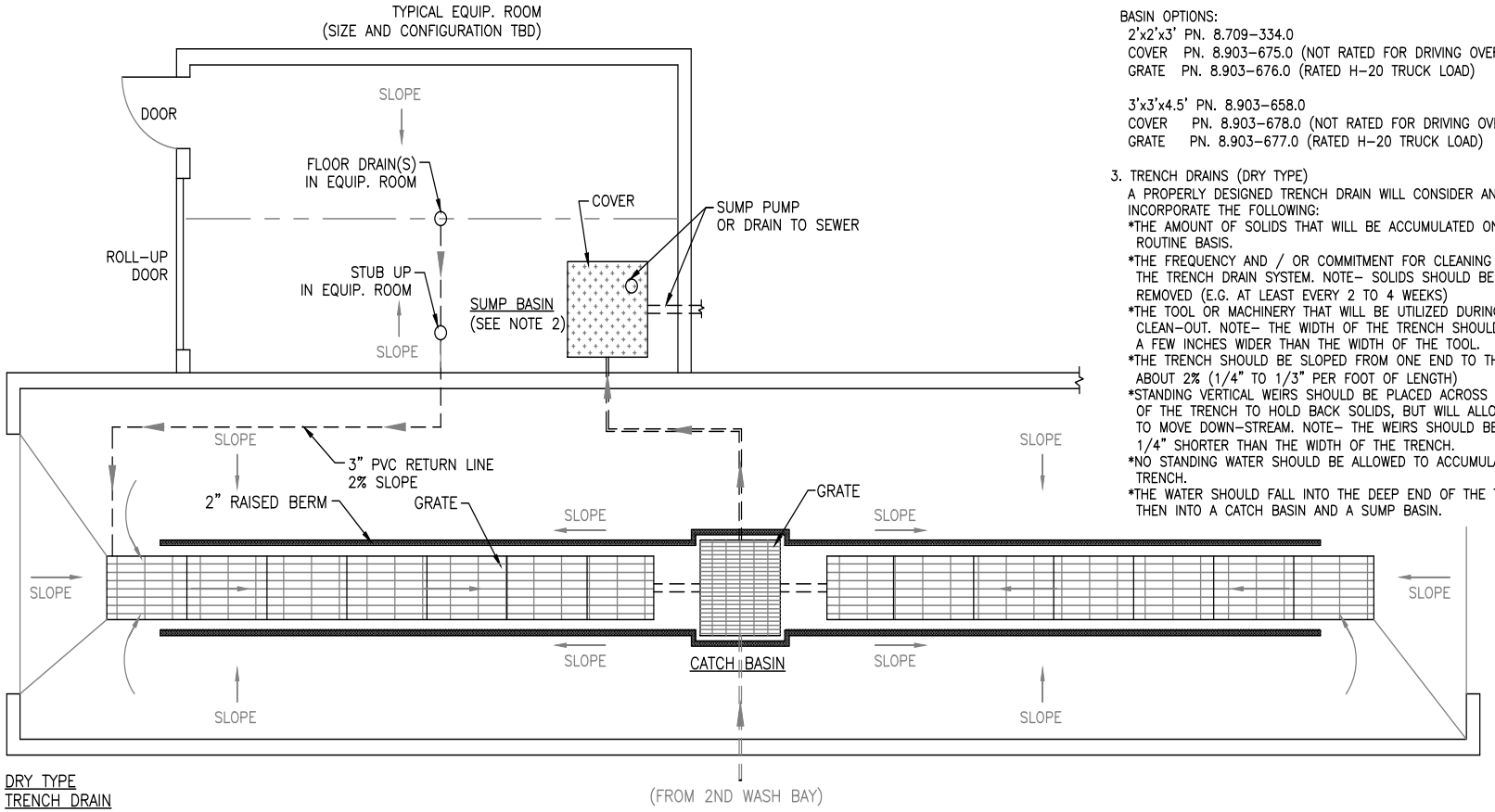

DRY TYPE
TRENCH DRAIN
PLAN VIEW: NTS

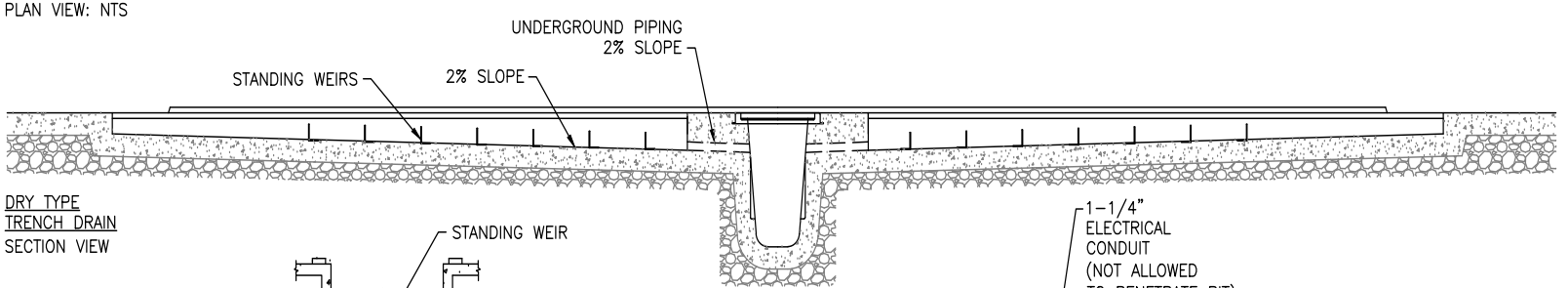

DRY TYPE
TRENCH DRAIN
SECTION VIEW

TRENCH DRAIN
SECTION END VIEW
(NOT TO SCALE)

SUMP BASIN:

DISCLAIMER:
THIS DRAWING IS FOR REFERENCE PURPOSED ONLY. ACTUAL CONFIGURATION MAY VARY BASED ON THE APPLICATION REQUIREMENTS

waterMaze
WATER TREATMENT SYSTEMS

PROJECT NAME
INGROUND PRETREATMENT
PIT SYSTEMS

DRAWN FOR
WATER MAZE

TITLE
LONG PAD / CENTER CATCH BASIN / SUMP BASIN

RELEASED FOR FAB
NAME:
DATE:

AS BUILT NOTES
NAME:
DATE:

PROJ. MANAGER:
BERNIE LARSON

JOB NO:
DATE:
02/13/15
LEAD:
T.DELLWO
DRAWN BY:
E.LAVA
REFERENCE NO:

SHEET NO
PIT-06

4.1645

Commercial & Industrial - Load Requirements

Please Complete in Full and return to Project Manager

Include a copy of plat and water and sewer prints.

Company Use ONLY – WR #: _____

Oncor Electric Delivery Company LLC
a Delaware limited liability company

Your electric service request will be processed upon form completion in its entirety, **signed and returned** to the appropriate Oncor Electric Delivery Company Project Manager. Allow 10 working days for an estimated cost for providing electric service, including all applicable charges and approximate timeline for construction completion after all required documents have been provided. Please visit the Oncor Electric Delivery web site for information concerning electric service guidelines, approved meter-bases and other service installation requirements. All meters must be located outside the building, cannot be located within an enclosed area, and must meet proper clearance requirements.
http://oncor.com/electricity/construct/guidelines/const guide.aspx

Project / Customer Name: Midland Fire Station #5 Project Location / Cross Streets: W. Golf Course Road and N. Garfield Street

Physical Address: 2200 Golf Course Road (Street Address) Midland (City), TX 79701 (Zip Code)

Office Phone: 432-685-7436 Cell Phone: _____ Fax # _____ E-mail Address: _____

General Contractor: _____ Phone: _____ Fax: _____

Electrical Contractor: _____ Phone: _____ Fax: _____

Requested Dates for Electric Service: Temporary Service _____ Permanent Service _____

- If available – Please Provide:

Temporary Premise Number: _____

Permanent Premise Number: _____

Additional Design Charge

This charge is made for preparing iterative designs to provide new service to a specific location where such iterations are at the request of the Retail Customer/CR for the Retail Customer's sole benefit. The initial two designs on a project will be included in the system charges; **any additional designs will be done at Retail Customer's expense pursuant to this charge.**

Designated responsible party for payment of any costs associated with providing electrical service. Contribution in Aid of Construction ("CIAC") shall be payable to Oncor Electric Delivery Company prior to any construction scheduling. Please check only one:

Customer ☐ General Contractor ☐ Architect ☐ Electrical Contractor ☐ Other _____

Federal Tax ID #: _____ or Valid Driver's License #: _____ State of _____

ELECTRIC REQUIREMENTS

A site plan will be required identifying the proposed transformer, meter and other Oncor equipment locations. A survey or plat may be required by the Oncor project manager. An easement for the onsite Oncor facilities will be required either by a final plat or by a separate instrument. A copy of the warranty deed will be required if a separate instrument is secured for the Oncor easement.

Hours of Operation: _____ A.M. to _____ P.M. or Other: 24 hour operation Days of Operation: 7 days / week thru 7 days / week

Number of Electrical Meters Requested: 1 and Service Size in AMPS: 800A, _____, _____, _____, _____

Number of Conductors per Phase: 2 Wire Size: 600kcmil Requested Service Type: Overhead ☐ Underground ☑

Will any generators be installed on this project? Yes

Transocket Delivery Information: **Required Date:** _____

Ship to-- Attn: _____ Address: _____ City: _____, TX Zip: _____

- Allow up to 10 business days for preliminary cost estimate and an additional 3 weeks (minimum) for scheduling an Oncor Electric Delivery Crew.
- Required permits, utility easements and surveying will necessitate additional design time.
- All three-phase transformers will require a 14 to 16 week lead time – no exceptions.
- Oncor Electric Delivery will provide the least cost design. This design will be considered Iterative Design #1.
- Excess facilities at the request of the customer shall result in additional charges to the customer.
- It is the customer's responsibility to clear right-of-way for the installation of electric distribution facilities to company specifications.

Signature	Dylan Amons (Printed Name)	Electrical Designer (Title)

210-293-4604 (Office Phone)	210-912-4550 (Cell Phone)	damons@dbrinc.com (E-Mail Address)	02/17/2020 (Date)

Oncor Electric Delivery Company LLC
a Delaware limited liability company

Project / Customer Name: Midland Fire Station #5

If a commercial project, please provide the total square footage of building and the square footage of HVAC space.

Total Building Square Footage: 11,480 HVAC Square Footage: 11,480

Requested Voltage (circle only one)

Single Phase - 120/240 | 3 Phase - 120/208 | 3 Phase - 120/240 | 3 Phase - 277/480 | 3 Phase - 480

Single Phase – 240/480 Other: _____

Indicate only one: New Load ☑ Adding Load to an Electrically Energized Service ☐

ELECTRIC LOAD REQUIREMENTS
(Please use an additional page if necessary)

HVAC Load Information:

Quantity	Phase	Volts	Tons	SEER	Connected kW – Each	Heat kW – Each
4	1	208			6	6
2	1	208			3	3

Motor Load Information:

Quantity	Phase	Volts	HP Each	Start Type	Equipment Description
1	3	208	15		Cascade Machine
1	3	208	10		Washer/Extractor
1	3	208	7.5		Air Compressor
3	3	208	2		Rolling/Folding Bay Doors
2	3	208	1/2		Garage Exhaust Fans

Lighting & Miscellaneous Load Information:

Quantity	Phase	Volts	Connected kW – Each	Equipment Description
1	1	120	9.1	Interior Lighting
1	1	120	1.8	Exterior Lighting
1		120/208	23.1	Miscellaneous

Signature	Printed Name	Title
	Dylan Amons	Electrical Designer

Office Phone	Cell Phone	E-Mail Address	Date
210-293-4604	210-912-4550	damons@dbrinc.com	02/17/2020

Oncor Electric Delivery Company LLC
a Delaware limited liability company

Project / Customer Name: Midland Fire Station #5

If a commercial project, please provide the total square footage of building and the square footage of HVAC space.

Total Building Square Footage: 11,480 HVAC Square Footage: 11,480

Requested Voltage (circle only one)

Single Phase - 120/240 | 3 Phase - 120/208 | 3 Phase - 120/240 | 3 Phase - 277/480 | 3 Phase - 480

Single Phase – 240/480 | Other: _____

Indicate only one: New Load ☑ | Adding Load to an Electrically Energized Service ☐

ELECTRIC LOAD REQUIREMENTS
(Please use an additional page if necessary)

HVAC Load Information:

Quantity	Phase	Volts	Tons	SEER	Connected kW – Each	Heat kW – Each

Motor Load Information:

Quantity	Phase	Volts	HP Each	Start Type	Equipment Description
1	3	208	10		Elevator
1	3	208	20		Fire Pump
1	3	208	0.5		Jockey Pump

Lighting & Miscellaneous Load Information:

Quantity	Phase	Volts	Connected kW – Each	Equipment Description

Signature	Printed Name	Title
	Dylan Amons	Electrical Designer

Office Phone	Cell Phone	E-Mail Address	Date
210-293-4604	210-912-4550	damons@dbrinc.com	02/17/2020

Commercial & Industrial - Load Requirements

Please Complete in Full and return to Project Manager

Include a copy of plat and water and sewer prints.

Company Use ONLY – WR #: _____

Oncor Electric Delivery Company LLC
a Delaware limited liability company

Your electric service request will be processed upon form completion in its entirety, **signed and returned** to the appropriate Oncor Electric Delivery Company Project Manager. Allow 10 working days for an estimated cost for providing electric service, including all applicable charges and approximate timeline for construction completion after all required documents have been provided. Please visit the Oncor Electric Delivery web site for information concerning electric service guidelines, approved meter-bases and other service installation requirements. All meters must be located outside the building, cannot be located within an enclosed area, and must meet proper clearance requirements.
http://oncor.com/electricity/construct/guidelines/const guide.aspx

Project / Customer Name: Midland Fire Station #11 Project Location / Cross Streets: Briarwood Avenue & Golden Gate Drive

Physical Address: 6600 Briarwood Avenue (Street Address) Midland (City), TX 79707 (Zip Code)

Office Phone: 432-685-7436 Cell Phone: _____ Fax # _____ E-mail Address: _____

General Contractor: _____ Phone: _____ Fax: _____

Electrical Contractor: _____ Phone: _____ Fax: _____

Requested Dates for Electric Service: Temporary Service _____ Permanent Service _____

- If available – Please Provide:

Temporary Premise Number: _____

Permanent Premise Number: _____

Additional Design Charge

This charge is made for preparing iterative designs to provide new service to a specific location where such iterations are at the request of the Retail Customer/CR for the Retail Customer's sole benefit. The initial two designs on a project will be included in the system charges; **any additional designs will be done at Retail Customer's expense pursuant to this charge.**

Designated responsible party for payment of any costs associated with providing electrical service. Contribution in Aid of Construction ("CIAC") shall be payable to Oncor Electric Delivery Company prior to any construction scheduling. Please check only one:

Customer ☐ General Contractor ☐ Architect ☐ Electrical Contractor ☐ Other _____

Federal Tax ID #: _____ or Valid Driver's License #: _____ State of _____

ELECTRIC REQUIREMENTS

A site plan will be required identifying the proposed transformer, meter and other Oncor equipment locations. A survey or plat may be required by the Oncor project manager. An easement for the onsite Oncor facilities will be required either by a final plat or by a separate instrument. A copy of the warranty deed will be required if a separate instrument is secured for the Oncor easement.

Hours of Operation: _____ A.M. to _____ P.M. or Other: 24 hour operation Days of Operation: 7 days / week thru 7 days / week

Number of Electrical Meters Requested: 1 and Service Size in AMPS: 800A, _____, _____, _____, _____

Number of Conductors per Phase: 2 Wire Size: 600kcmil Requested Service Type: Overhead ☐ Underground ☑

Will any generators be installed on this project? Yes

Transocket Delivery Information: **Required Date:** _____

Ship to-- Attn: _____ Address: _____ City: _____, TX Zip: _____

- Allow up to 10 business days for preliminary cost estimate and an additional 3 weeks (minimum) for scheduling an Oncor Electric Delivery Crew.
- Required permits, utility easements and surveying will necessitate additional design time.
- All three-phase transformers will require a 14 to 16 week lead time – no exceptions.
- Oncor Electric Delivery will provide the least cost design. This design will be considered Iterative Design #1.
- Excess facilities at the request of the customer shall result in additional charges to the customer.
- It is the customer's responsibility to clear right-of-way for the installation of electric distribution facilities to company specifications.

Signature	Dylan Amons (Printed Name)	Electrical Designer (Title)

210-293-4604 (Office Phone)	210-912-4550 (Cell Phone)	damons@dbrinc.com (E-Mail Address)	02/17/2020 (Date)

Oncor Electric Delivery Company LLC
a Delaware limited liability company

Project / Customer Name: Midland Fire Station #11

If a commercial project, please provide the total square footage of building and the square footage of HVAC space.

Total Building Square Footage: 11,480 HVAC Square Footage: 11,480

Requested Voltage (circle only one)

Single Phase - 120/240 | 3 Phase - 120/208 | 3 Phase - 120/240 | 3 Phase - 277/480 | 3 Phase - 480

Single Phase – 240/480 Other: _____

Indicate only one: New Load ☑ Adding Load to an Electrically Energized Service ☐

ELECTRIC LOAD REQUIREMENTS
(Please use an additional page if necessary)

HVAC Load Information:

Quantity	Phase	Volts	Tons	SEER	Connected kW – Each	Heat kW – Each
5	1	208			4	4
2	1	208			3.8	3.8

Motor Load Information:

Quantity	Phase	Volts	HP Each	Start Type	Equipment Description
1	3	208	15		Cascade Machine
1	3	208	10		Washer/Extractor
1	3	208	7.5		Air Compressor
8	3	208	2		Rolling/Folding Bay Doors
2	3	208	1/2		Garage Exhaust Fans

Lighting & Miscellaneous Load Information:

Quantity	Phase	Volts	Connected kW – Each	Equipment Description
1	1	120	9.4	Interior Lighting
1	1	120	1.5	Exterior Lighting
1		120/208	42	Miscellaneous

Signature	Printed Name	Title
	Dylan Amons	Electrical Designer

Office Phone	Cell Phone	E-Mail Address	Date
210-293-4604	210-912-4550	damons@dbrinc.com	02/17/2020

Engineering Department- Matt Carr 432-685-7136 mcarr@midlandtexas.gov

General Comments:

1. Please include the final plat in the set of plans on next submittal.
    a. Noted

Drainage Comments:

1. Per City of Midland Policy Statement Drainage note #4, a minimum of 1.0-ft of freeboard is required for basins with designed storage of less than 5 acre-ft is required. See sheet C241 for mark-ups.
    a. Updated

Utility Plan Comments

1. Detail A shows a 2" plug to the east of the current manifold configuration. Instead of a plug, cap the water line as shown on sheet C300.
    - Updated
2. Proposed fire hydrants need to be on a separate system than the sprinkler system. By disconnecting the fire hydrant line from the FDC line allows both fire protection measures to pull water from separate taps and not have to compete within one and another.
    - Added another tap for hydrants
3. Per City of Midland Policy Statement Utilities note #22, wastewater service laterals that connect to public manholes must be no less than 6" diameter and constructed in the public ROW to the same standards as a public wastewater main.
    - Updated to 6"

A written response to each comment shall accompany revised plans, all change/corrections shall be "clouded" on the resubmitted plans.

Sincerely,

Jeremy Mills
Commercial Plan Review
432-685-7389
jmills@midlandtexas.gov

February 24, 2020

Addendum No. 03

Project: Fire Stations 5 & 11

Owner: City of Midland

Architect: Martinez Architects, LP
Project Number: MA 18017

martinez ARCHITECTS

This Addendum forms a part of the Contract Documents and modifies the original Bidding Documents and/or prior Addenda as noted below. All conditions, requirements, materials and workmanship shall be satisfied as described in the Contract Documents unless specifically stated otherwise. This Addendum consists of changes to the contract documents, specifications, and drawings as listed and described below.

Revisions to Bidding Requirements:

1. **REVISE** Bid Date from Wednesday, February 26th @ 2:00 pm to Friday, February 28th @ 2:00 pm local time.
    a. Requests for Information from bidding contractors will not be considered after February 25th.
    b. The final addendum will be issued February 26th.

-- END OF ADDENDUM 3 --

February 26, 2020

Addendum No. 04

Project: Fire Stations 5 & 11

Owner: City of Midland

Architect: Martinez Architects, LP
Project Number: MA 18017

martinez ARCHITECTS

This Addendum forms a part of the Contract Documents and modifies the original Bidding Documents and/or prior Addenda as noted below. All conditions, requirements, materials and workmanship shall be satisfied as described in the Contract Documents unless specifically stated otherwise. This Addendum consists of changes to the contract documents, specifications, and drawings as listed and described below.

Clarifications:

1. NOTE: If any discrepancy exists between changes issued by written narrative in this or previous addenda and the revised drawings attached to any issued addenda, the change described by written narrative shall govern.
2. The public sewer line for Station 11 is not yet installed. The City will be installing this concurrently with the construction of the Fire Station. Bidders are to include the manhole at the location shown on the Civil drawings. The City has stated the sewer line will be installed at a depth of approximately 10 feet.
3. The two metal canopy structures at the Fueling Stations are part of Add Alternate #1. The canopy structure and wall at the vacuum and tire fill station are part of Add Alternate #2. The dumpster enclosure is part of base bid, but its location changes in each add alternate. There are (2) additional bollards at the dumpster enclosure for Alternate #2.
4. Refer to Spec Section 10 73 16 Aluminum Canopies for references on drawings to “Aluminum Awning” or “Pre-finished Mtl. Sunshade Device”
5. Where portions of the building elevation are hidden from view, the division between masonry and metal panel materials shown at the adjacent wall surface shall be continued at the same level on the surface hidden from view.
6. There is not a basis of design for Item AS-33 on Sheet A202 at Fire Station 11.
7. Mop and Broom Holder shall be provided at each mop sink location per the specifications. Reference drawings for locations of mop sinks.
8. Paper Towel Dispensers shall be provided at each lavatory, per the specifications. This includes lavatories at each Restroom and any Utility rooms with a lavatory. Reference drawings for locations of Restrooms and Utility rooms.
9. As noted on drawings, 60” corner guards shall be provided at all outside drywall corners, excluding at column furrouts. Corner guards shall meet the specification of 10 26 00 and shall be stainless steel.
10. Window designated to receive “fire-rated” glass shall also have “fire-rated” frames.
11. Section 07 11 13 applies to the elevator pit and any other sub-grade masonry foundation.
12. No cast iron downspout boots are required. Where downspouts discharge to a sidewalk, concrete splashblocks are still required.
13. Exposed galvanized steel surfaces are not intended to receive an application of field paint, unless noted otherwise.
14. No fireproofing or intumescent coatings are required on any structural components.

Revisions and Clarifications to Previous Addenda:

1. The trench drain at the Wash Bay building shall be provided by the plumbing contractor, and is not part of the “Wash Bay Vendor’s” scope. Contractor shall provide the trench drain and all associated items for full installation and function of the trench drain.

2. Section 08 71 00 – Door Hardware
    a. The section attached in Addendum #2 was not the correct specification for this project. The correct specification section is attached, which addresses the added Door Bottom @ each Dorm Door as identified in Addendum #2.

3. Section 6 65 00 – Simulated Wood Products was removed by Addendum #1, but was referenced in Addendum #2. This Section is re-inserted to the project by this Addendum #4, and attached again for clarity.

4. Addendum #2 added the provision of sidewalk trenches with metal tread plate at locations of refrigerant lines crossing sidewalks at Station 11. Provide as follows:

    a. Provide a 12" wide, 60" long, 3.5" deep sidewalk trench with 3/8" diamond plate steel cover at the refrigerant lines on the east side of the building (near the covered patio). Once across the sidewalk, these refrigerant lines shall be permitted to run above ground in the landscaping area and within mechanical enclosure area.

    b. In lieu of providing trench and tread plate at the refrigerant lines on the west side, relocate ACCU-1 and ACCU-2 as near as possible to the exterior wall of the building.

Revisions to Bidding Requirements:

1. Replace the Prevailing Wage Rates labeled for "Anderson County" with the attached Prevailing Wage Rates for Midland County.

2. Due to the size of the Station 5 site, the City has made provisions for a nearby property to be used for staging, under certain conditions. Please refer to attachment "Station 5 Staging"

Revisions to Specifications:

1. Section 03 66 00 – Special Concrete Floor Finishes
    - **REVISE** Minimum Concrete Compressive Strength from "3500 psi" to "per Structural Engineer, refer to General Notes on Structural Drawings" (1.03, B, 1, a.)

2. Section 05 51 33 – Metal Wall Ladder
    - **REVISE** Section to remove unrelated components. Section applies to fixed vertical ladder @ access to Rappelling Platform.

3. Section 05 51 33.13 – Inclined Metal Ladders
    - **ADD** new section in its entirety. Section applies to ladders to mezzanine and roof access.

4. Section 06 16 00 – Sheathing
    - **REMOVE** Sub-Paragraph E. in its entirety from Paragraph 2.05
        - Exterior Sheathing is defined by 2.05, D. and Weather Barrier is defined by 07 25 00, Paragraph 2.02
    - **REMOVE** Paragraphs 3.07 and 3.08

5. Section 06 40 10 – Interior Architectural Millwork
    - **REMOVE** Paragraph 2.03, B. Stained Wood Cabinets (Cabinets shall be plastic laminate over solid wood as indicated on drawings)
    - **REPLACE** Paragraph 2.03, C. Countertops, with: "Provide countertops in materials and locations indicated on drawings")

6. Section 07 25 00 – Weather Barrier
    - **REPLACE** "dampproofing" with "weather barrier" at Paragraph 1.06
    - **REMOVE** Paragraph 2.01

- The commercial building wrap identified at 2.02 is the specified product for the entire building. Dampproofing will only be used below grade at the Elevator, and is specified in Section 07 11 13 (added by this addendum)

7. Section 08 36 00 – Sectional Overhead Door
   - **REVISE** – Item 2.3, E, 4. a. from "NEMA 9 waterproof" to "NEMA 4"

8. Section 08 44 13 – Glazed Aluminum Curtain Wall
   - **ADD** Section in its entirety. Section attached.

9. Section 08 80 00 – Glazed Systems
   - **REVISE** Aluminum Finish to be: "Clear Anodized" (2.03, A, 2.)

   - **REVISE** Color of tinted glass to be: "As selected by Architect from manufacturer's Standard Colors" (2.03, F, 1, d.)

10. Section 09 51 00 – Acoustical Ceilings
    - **REVISE** Paragraph 2.2, C, 2, as follows:
      - **REPLACE** "Antimicrobial" with "Scrubbable"
      - At Item c. "Edge Detail" **REPLACE** "Beveled Tegular" with "Square Lay-in"
      - At Item i. "Approved Product/Manufacturer" **REPLACE** "Calla conforming to No. 2822" with "CALLA Health Zone conforming to No. 2230"

11. Section 10 26 00 – Walls and Door Protection
    - **ADD** Paragraph "B" to 2.01 Manufacturers: "Other Manufacturers or Fabricators meeting the specifications"

    - **REVISE** Paragraph 202, A. sub-paragraphs 1. and 2. as follows:
      - **REMOVE** "Recess Mount" (corner guards shall be surface mounted)
      - Material: **REMOVE "**Type 430" (Type 304 shall be used)
      - **REVISE** Wing Size to be: **1.5"**
      - **REMOVE** Option of embossed pattern. Finish shall be "brushed"

12. Section 10 28 13 – Toilet Accessories
    - **REPLACE** Item "b. Model" of "Heavy Duty White Vinyl Shower Curtain, Rod, and Hooks" at 3.2, A, 9, b. as follows:
      b. Model:
      i. Curtain: B-204-2 and B-204-3 (refer to plans for width at each location)
      ii. Rod: B-6047x36 and B-6047x60 (refer to plans for length at each location)
      iii. Hooks: 204-1

    - **REVISE** "Paper Towel Dispenser" at 3.2, A, 3, Items a. and c. as follows:
      a. Mounting: Recessed
      c. Locations: One (1) at each hand lavatory. Coordinate wall location with Architect.

    - **REVISE** "L-Shaped Phenolic Shower Seat" at 3.2, A, 4, Items b. and c. as follows:
      b. Model: B-5181 – Reversible Folding Shower Seat
      c. Provide one (1) at each accessible shower (designated as "ADA RR" on plans)

    - **ADD** Item "d." to "Robe Hook with Bumper" at 3.2, A, 7 as follows:
      d. Quantity: Provide two (2) hooks at each restroom with a shower

13. Section 10 44 00 – Fire Extinguishers and Cabinets
    - **ADD** "J.L. Industries" as acceptable Fire Extinguisher Manufacturer (2.01, A, 1, d.)

14. Section 12 49 20 – Manual Operated Roller Shade
    ADD Section in its entirety. This section shall be utilized wherever plans refer to Black Out Shades.

15. Section 26 51 15 – Ceiling Fans

- **ADD** Section in its entirety

Revisions to Drawings (Both Fire Stations):

1. **A102 – Site Details**
   - **ADD** note to Detail 15: “Refer to 2/C221 for additional footing information”

2. **A701 – Reflected Ceiling Plan**
   - **ADD** General Note: “PROVIDE MTL. STUD AND GYP. BD. FURRDOWN OVER ALL KITCHEN CABINETS. FACE OF FURRDOWN SHALL BE FLUSH WITH FACE OF CABINET”

3. **A901 – Finish Schedule**
   - **REMOVE** “CERAMIC” from description of Lay-in Scrubbable ceiling panel.
   - **ADD** Remark to Utility Rooms: “Provide FRP to 48” AFF behind mop sink.”

4. **A902 – Door Schedule**
   - At all doors serving Pantries, **ADD** Remark: “PROVIDE LOCAL PROGRAMMABLE KEYPAD”

5. **C221 – Paving Details**
   - **ADD** note to Detail 2: “Refer to 15/A102 for additional signage @ parking sign”

Revisions to Drawings (Fire Station 11 only):

1. **C110 – Final Plat**
   - **ADDED** sheet for reference
2. **C230 – Grading Plans (Base Bid and Alternates)**
   - **ADDED** more contours to the north and west side to tie into existing grades.
     - Revised sheets attached.

3. **A201 – Floor Plan**
   - **REVISE** Window Tag at storefront between Dining Room 109 and Patio 110 from “10” to “03”
   - **ADD** Enlarged Floor Plan Call-out 8/A601 @ Kitchen area
   - See attached sheet with revisions clouded.

4. **A202 – Add Alternates 1 & 2**
   - **ADD** additional notes under “Fuel Tank & Dispenser Notes”
     - See attached document “FUEL SYSTEM NOTES” for full listing of notes added

   - **REVISE** Fascia note under “Metal Canopy Notes”. Replace “ACM MATERIAL” with “PRE-FINISHED METAL FASCIA”
   - **REVISE** Downspout note under “Metal Canopy Notes”. Replace “INTEGRAL DRAIN DOWNSPOUTS” at canopies with “PROVIDE PRE-FINISHED METAL GUTTERS AND DOWNSPOUTS”

   - **REVISE** Canopy Lighting note under “Metal Canopy Notes”. Replace “LED FIXTURES, BY CANOPY PROVIDER” with “LED FIXTURES, BY FUEL SYSTEM PROVIDER”

   - **REPLACE** Keynote AS-53 with “REFER TO FINISH SCHEDULE FOR FLOORING FINISH”

5. **A305 – Roof Details**
   - **ADD** Notes to Section Details
   - See attached revised sheet.

6. **A403 – Exterior Elevations**
   - **REPLACE** references to “INTEGRAL DRAIN” at canopies with “PROVIDE PRE-FINISHED METAL GUTTERS AND DOWNSPOUTS”

7. **A601 – Enlarged Floor Plans**
   - **REVISE** Mirror size to be: 24” x 48”
   - **ADD** Detail 8
   - **REMOVE “**Wall-Mounted Liquid Soap Dispenser” Keynote and associated Tag on Floor Plan. Soap Dispensers are not part of the project.
   - See attached sheet with revisions clouded.

8. **A603 – Interior Elevations**
   - **REMOVE** Detail 2. Per Addendum #1 (A906 – Equipment Schedule), the lockers in the dorm rooms are provided by owner.

9. **A805 – Millwork Details**
   - **REMOVE** Detail 12. Per Addendum #1 (A906 – Equipment Schedule), the lockers in the dorm rooms are provided by owner.

10. **A902 – Door & Window Schedule**
    - **ADD “**PROVIDE BLACK OUT SHADES” at the following Window Types: **03, 07**
    - **ADD “**PROVIDE WINDOW BLINDS” at the following Window Types: **04**
    - **REVISE** Window Tag for Window Type between Type 02 and Type 04 from “10” to “03”
    - **ADD** Window Tag for Window Type between Type 06 and Type 08: “07”
    - **REVISE** Hardware Set designations to match Revised Hardware Groups document
    - **REVISE** the following Window Types to be “Curtain Wall”: **08, 09**
      - Curtain Wall specification section is added in this addendum

11. **S605 – Roof Framing Details**
    - **REVISE** Details 7 and 9
    - See attached sheet with revisions clouded.

12. **S610 – Roof Framing Details**
    - **REVISE** Detail 4
    - See attached sheet with revisions clouded.

Revisions to Drawings (Fire Station 5 only):

1. **All Landscape Sheets**
   - **REVISE** Project Name and Address in Titleblock to be for Fire Station 5, not Fire Station 11

2. **A602, A603, and A804 (Millwork)**
   - **REVISE** all countertop material call-outs as follows:
     - At Kitchen: **Quartz**
     - At Offices and Utility: **Plastic Laminate**
     - At Restrooms: **Solid Surface**
     - At Shop: **Solid Hardwood**

3. **A101 – Site Plan**
   - **REVISE** Keynote numbering. Keynote tag locations and Keynote descriptions remain unchanged. See attached sheet with revisions clouded.

4. **A103 – Site Details**
   - **REVISE** Details 12, 13, 14 to provide additional information for Gabion and Cedar enclosure at generator. See attached sheet with revisions clouded.

5. **A201 – 1ST Floor Plan**
   - **REVISE** Keynote numbering. Keynote tag locations and Keynote descriptions remain unchanged.
   - **REVISE** Keynote #60 from "FIXED LADDER" to be: "FOLDING INCLINED LADDER"
   - **ADD** Notes to provide additional information for Gabion and Cedar enclosure at generator.
   - See attached sheet with revisions clouded.

6. **A202 – 2nd Floor Plan**
   - **REVISE** Keynote numbering. Keynote tag locations and Keynote descriptions remain unchanged.
   - **REVISE** Keynote #60 from "FIXED LADDER" to be: "FIXED LADDER @ RAPPELLING PLATFORM; FOLDING INCLINED LADDERS @ MEZZANINE"
   - **ADD** Enlarged Area callout @ Kitchen and New Section callouts
   - See attached sheet with revisions clouded.

7. **A205 – Partition Type Plan**
   - **REVISE** Wall Types at Fire Riser/Pump Room. South and West walls shall be Type "K3"
   - See attached sheet with revisions clouded.

8. **A301 – Roof Plan**
   - **REVISE** Callout of two (2) awnings over entry doors on north side from "PRE-FINISHED STANDING SEAM METAL ROOFING" to be: "ALUMINUM CANOPY"

9. **A302 – Roof Details**
   - At Detail 5, **REMOVE** Note "METAL BASE TRIM", and **REPLACE** Note "Metal Wall Panel" with "EXTERIOR CLADDING – REFER TO BUILDING ELEVATIONS"

10. **A402 – Exterior Elevations**
    - **ADD** Detail callout and Notes @ Rappelling Bar from Roof
    - See attached sheet with revisions clouded.

11. **A403 – Building Sections**
    - **ADD** General Note: "PROVIDE 3" RIGID INSULATION ATTACHED TO UNDERSIDE OF 2ND FLOOR DECKING UNDER ALL AREAS OF THE 2ND FLOOR. AT CONTRACTOR'S OPTION, 6" BATT INSULATION OR SPRAY FOAM INSULATION OF EQUIVALENT R-VALUE MAY BE INSTALLED IN LIEU OF RIGID INSULATION"

12. **A502 – Wall Sections**
    - **ADD** Dimensions to Decorative Architectural bracket, Detail 1.
    - See attached sheet with revisions clouded.

13. **A503 – Wall Sections**
    - **REVISE** callout on Detail 1 of "UTILITY BRICK VENEER" to be: "STONE VENEER"
    - **REVISE** the material callout of the soffit/ceiling over the parking area from "SUSPENDED CEILING" to be: "METAL SOFFIT PANELS ON METAL STUD FRAMING"

14. **A601 – Enlarged Floor Plans**
    - **REVISE** Keynote numbering. Keynote tag locations and Keynote descriptions remain unchanged.
    - **REVISE** Mirror size to be: 24" x 48"
    - **REMOVE** "PROVIDED BY OWNER" from Keynote #10. Paper Towel Dispensers shall be provided and installed by contractor.
    - **REMOVE** Shower Wing Wall @ Decon 102
    - **ADD** Detail 8
    - **REMOVE "**Wall-Mounted Liquid Soap Dispenser" Keynote and associated Tag on Floor Plan. Soap Dispensers are not part of the project.
    - See attached sheet with revisions clouded.

15. **A603 – Interior Elevations**

- **REMOVE** Detail 15. Per Addendum #1 (A906 – Equipment Schedule), the lockers in the dorm rooms are provided by owner.

16. **A701 – Reflected Ceiling Plan**
    - **REMOVE** Hatched pattern indicating Gyp. Bd. from the soffit/ceiling over the outdoor parking area
        - This ceiling material shall be metal soffit panels
17. **A804 – Millwork Details**
    - **REMOVE** Detail 10. Per Addendum #1 (A906 – Equipment Schedule), the lockers in the dorm rooms are provided by owner.

    - **ADD** General Sheet Note: "ALL CABINET DOORS AND DRAWER FACES SHALL BE PLASTIC LAMINATE OVER SOLID WOOD. ALL OTHER PANELS OF CABINET CONSTRUCTION SHALL BE PLASTIC LAMINATE OVER PLYWOOD"

18. **A805 – Mezzanine Framing Details**
    - **REMOVE** Sheet in its entirety

13. **A806, A807 – Exterior Details**
    - **ADD** New Sheets describing railing and brise-soleil at 2nd floor covered patio
    - See attached sheets.

19. **A901 – Finish Schedule**
    - **ADD** Note: "Elevator shall have LVT flooring"
    - **REVISE** Note #5: "All cabinets shall be plastic laminate over solid wood U.N.O."

20. **A902 – Door & Window Schedule**
    - **ADD "**PROVIDE BLACK OUT SHADES" at the following Window Types: **08, 10, 11**
    - **ADD "**PROVIDE WINDOW BLINDS" at the following Window Types: **04**
    - **REMOVE** "WIN. COVERING: --" from all Window Types
    - **REVISE** Hardware Set designations to match Revised Hardware Groups document
    - **REVISE** the following Window Types to be "Curtain Wall": **01, 07, 09**
        - Curtain Wall specification section is added in this addendum
    - See attached sheet with revisions clouded.

21. **S201 – Foundation Plan**
    - **REVISE** Location of CMU wall footings to align with Architectural floor plans at Fire Riser/Pump room and Electrical and Yard Storage areas.
    - See attached sheet with revisions clouded.

22. **S203 – Low Roof Framing Plan – Unit 'B'**
    - **ADD** posts and detail 9/S701 along Grid 'F'
    - See attached sheet with revisions clouded.

23. **S305 – Foundation Details**
    - **ADD** Note #6 to Detail #6: "PROVIDE FIXED LADDER FOR PIT ACCESS. COORDINATE LOCATION AND CLEARANCE REQUIREMENT WITH ELEVATOR INSTALLATION"

24. **S701 – Masonry Details**
    - **ADD** Detail 9/S7.01
    - See attached sheet with revisions clouded.

Attachments:

1. Specification Sections:
    a. 05 51 33 – Metal Wall Ladder
    b. 05 51 33.13 – Inclined Metal Ladders

c. 08 44 13 – Glazed Aluminum Curtain Wall
d. 08 71 00 – Door Hardware
    i. Revised Door Hardware Index also attached.
e. 12 49 20 – Manual Operated Roller Shade
f. 26 51 15 – Ceiling Fans
g. (See M/E/P/T Addendum for related Specification Sections attached)

2. Drawing sheets:

a. C110 – Final Plat (Station 11)
b. C230 – Grading Plans (Base Bid & Alternates sheets) (Station 11)
c. A101 – Site Plan (Station 5)
d. A102 – Site Details (Station 5)
e. A201 – Floor Plan (both Stations)
f. A202 – 2nd Floor Plan (Station 5)
g. A205 – Partition Types (Station 5)
h. A305 – Roof Details (Station 11)
i. A402 – Exterior Elevations (Station 5)
j. A502 – Wall Sections (Station 5)
k. A601 – Enlarged Floor Plans (both Stations)
l. A806 – Exterior Details (Station 5)
m. A807 – Exterior Details (Station 5)
n. A902 – Door & Window Schedules (both Stations)
o. S201 – Foundation Plan (Station 5)
p. S203 – Low Roof Framing Plan (Station 5)
q. S701 – Masonry Details (Station 5)
r. S605 – Roof Framing Details (Station 11)
s. S610 – Roof Framing Details (Station 11)
t. (See M/E/P/T Addendum for related Drawings attached)

3. Additional Documents
a. Prevailing Wage Rates
b. FUEL SYSTEM NOTES
c. Station 5 Staging

-- See following pages for M/E/P/T Addendum Items --

SERVICE | QUALITY | INTEGRITY | SUSTAINABILITY

9601 McAllister Freeway
Suite 410
San Antonio, TX 78216
v 210.546.0200

Addendum

DATE
February 26, 2020

ADDENDUM NO.
04

PROJECT 196023.000| Midland Fire Station #5

The work described herein shall be added to the scope of work defined by the contract documents or it shall modify the scope of work defined by the contract documents as described. This work shall become a part of the contract documents by addendum.

SPECIFICATIONS

Item 01 **Specification Section 21 41 00 – Storage Tanks for Fire-Suppression Water (Narrative Only)**

A. Removed specification.

Item 02 **Specification Section 22 10 00 – Plumbing Piping**

A. Modified specification to include options for PVC/CPVC.

Item 03 **Specification Section 22 11 16 – Domestic Water Piping – Cross-Linked Polyethylene (PEX)**

A. Added specification section for use with RO system.

Item 04 **Specification Section 22 11 19 – Plumbing Specialties (Narrative Only)**

A. Added Econo-Drain as an acceptable manufacturer.

Item 05 **Specification Section 28 23 00 – Video Surveillance (Narrative Only)**

A. Para. 2.4 A.1 Revised “Video Insight” to “Milestone”.

DRAWINGS

Item 06 **Sheet E201 – Level 1 Power Plan**

A. Added power to trap primer.
B. Removed power and kept rough-in for emergency call-box.
C. Revised Electrical keyed note 23.

Item 07 **Sheet E202 – Level 2 & 3 Power Plan**

A. Added power to trap primer.

Item 08 **Sheet E502 – Electrical Schedules**

Addendum No. 4

A. Removed power to emergency call-box.

Item 09 Sheet P211 – Level 1 Plumbing Plan

A. Added Electronic Trap Primer (TP-2) outside Utility 112.
B. Revised general plumbing notes.
C. Revised plumbing keyed notes.

Item 10 Sheet P212 – Level 2 & 3 Plumbing Plan

A. Added Electronic Trap Primer (TP-2) in Work Stations 216.
B. Revised general plumbing notes.

Item 11 Sheet P401 – Plumbing Risers

A. Revised water riser diagram.

Item 12 Sheet P501 – Plumbing Schedules

A. Added Electronic Trap Primer (TP-2) to schedule.

Item 13 Sheet TS211 – Technology

A. Relocated carder reader and door station. Reference attach drawing.
B. Added data drop and carder reader in entry 101. Reference attach drawing.
C. Added keynote number 3. Reference attach drawing.

END OF ADDENDUM

SERVICE | QUALITY | INTEGRITY | SUSTAINABILITY

9601 McAllister Freeway
Suite 410
San Antonio, TX 78216
v 210.546.0200

Addendum

DATE
February 26, 2020

ADDENDUM NO.
04

PROJECT 196024.000| Midland Fire Station #11

The work described herein shall be added to the scope of work defined by the contract documents or it shall modify the scope of work defined by the contract documents as described. This work shall become a part of the contract documents by addendum.

SPECIFICATIONS

Item 01 **Specification Section 23 07 13 – Duct Insulation (Narrative Only)**

A. Revised section 3.2D.2 to read "2 inch thick with a minimum installed R-value of 8 when ducts are located in unconditioned spaces, such as ceiling plenum space.".

Item 02 **Specification Section 28 23 00 – Video Surveillance (Narrative Only)**

A. Para. 2.4 A.1 Revised "Video Insight" to "Milestone".

Item 03 **Specification Section 21 30 00 – Fire Pumps and 21 41 00 – Storage Tanks for Fire-Suppression Water (Narrative Only)**

A. Removed specification.

Item 04 **Specification Section 22 10 00 – Plumbing Piping (Narrative Only)**

A. Modified specification to include options for PVC/CPVC.

Item 05 **Specification Section 22 11 16 – Domestic Water Piping – Cross-Linked Polyethylene (PEX)**

A. Added specification section for use with RO system.

Item 06 **Specification Section 22 11 19 – Plumbing Specialties (Narrative Only)**

A. Added Econo-Drain as an acceptable manufacturer.

DRAWINGS

Item 07 **Sheet MEP101 – MEP Site Plan – Base Bid**

A. Added light fixtures for flagpole lighting.
B. Revised Electrical keyed note 12.

Item 08 **Sheet M201 – Level 1 & Mezzanine Mechanical Plan**

Addendum No. 04

A. Revised keyed notes 21 and 22.
B. Added keyed note 36.

Item 09 Sheet E101 – Level 1 & Mezzanine Lighting Plan

A. Tied ceiling fans into nearest lighting circuit and provided fan speed controller.
B. Revised lighting layout in apparatus bay.
C. Revised lighting layout in restroom 127.

Item 10 Sheet E201 – Level 1 Power Plan

A. Added rough-in for emergency call-box.
B. Added Electrical keyed note 29.
C. Relocated card reader rough-in to mullion.
D. Relocated receptacle in restroom 127.
E. Added power to (2) trap primers.

Item 11 Sheet E401 – Electrical One-Line Diagram

A. Revised Electrical One-Line Diagram.
B. Revised Electrical keyed notes.

Item 12 Sheet E501 – Electrical Schedules

A. Added flagpole fixture type 'S1'.

Sheet E502 – Electrical Schedules

A. Revised Electrical panel schedule.

Item 13 Sheet E601 – Electrical Details

A. Revised grounding detail.

Item 14 Sheet P201 – Level 1 & Mezzanine Plumbing Plan

A. Revised location of TD-2 in utility 133.
B. Revised lavatory piping in restroom 127.
C. Added 3/4" gas line to drop at BBQ grill on patio.
D. Added floor drain in ADA RR 107.
E. Added Electronic Trap Primer (TP-2) in Shop 135.
F. Revised general plumbing notes.
G. Added Keyed Notes 20 & 21.

Item 15 Sheet P401 – Plumbing Riser Diagrams

A. Modified sanitary and vent riser.
B. Modified water riser.

Item 16 Sheet P402 – Plumbing Riser Diagrams

C. Modified gas riser.

Item 17 Sheet P501 – Plumbing Schedules

Addendum No. 04

A. Added Electronic Trap Primer (TP-2) to schedule.

Item 18 Sheet P601 – Plumbing Details

B. Added detail #14 for gas sleeve through wall.

Item 19 Sheet TS201 – LEVEL 1 LOW VOLTAGE PLAN

A. Added key notes number 1. Reference attached drawing.
B. Added data drop in entry 101. Reference attached drawing.
A. Relocated carder reader and door station in entry 101. Reference attach drawing.

END OF ADDENDUM

SECTION 05 51 33 – METAL WALL LADDER

PART 1 GENERAL

1.01 SECTION INCLUDES

A. Aluminum fixed vertical ladders.

1.02 RELATED SECTIONS

A. Section 05 50 00 - Metal Fabrications: Miscellaneous metal supports.

B. Section 06 10 00 - Rough Carpentry: Roof framing and opening support.

C. Section 07 54 22 - Membrane Roofing: Roof curb flashing.

1.03 REFERENCES

A. ANSI A14.3: Ladders - Fixed - Safety Requirements.

B. OSHA 1910.27: Fixed Ladders.

1.04 SUBMITTALS

A. Submit under provisions of Section 01 33 00.

B. Product Data: Manufacturer's data sheets on each product to be used, including:

1. Preparation instructions and recommendations.

2. Storage and handling requirements and recommendations.

3. Installation methods.

C. Shop Drawings for Ladders:

1. Plan and section of ladder installation.

1.05 DELIVERY, STORAGE, AND HANDLING

A. Store products in manufacturer's unopened packaging until ready for installation.

B. Store products until installation inside under cover. If stored outside, under a tarp or suitable cover.

1.06 WARRANTY

A. Limited Warranty: Five years against defective material and workmanship, covering parts only, no labor or freight. Defective parts, if deemed so by the manufacturer, will be replaced at no charge, freight excluded, upon inspection at manufacturer's plant which warrants same.

PART 2 PRODUCTS

2.1 MANUFACTURER

A. Acceptable Manufacturer: Precision Ladders, LLC, which is located at: P. O. Box 2279; Morristown, TN 37816-2279; Toll Free Tel: 800-225-7814; Tel: 423-586-2265; Email: info@PrecisionLadders.com; Web: www.PrecisionLadders.com

B. Other manufacturer meeting requirements of the specification, as approved by Architect before or after bidding.

2.2 ALUMINUM FIXED VERTICAL LADDER

A. Aluminum Fixed Vertical Ladder and Components.

1. Model: Model FL -*** (***= vertical height in inches) Aluminum Fixed Vertical Ladder as manufactured by Precision Ladders LLC.
2. Capacity: Unit shall support a 1500 lb (680 kg) loading without failure, and individual treads shall withstand a 3,000 lb (1361 kg) loading without failure.
3. Performance Standard: Units designed and manufactured to meet or exceed ANSI A14.3 and OSHA 1910.27.

B. Components:

1. Ladder Stringer: 2-1/2 inch by 1-1/16 inch by 1/8 inch (64 mm by 27 mm by 3 mm) extruded 6005-T5 aluminum channel. Pitch: 90 degrees.
2. Ladder Tread: 2-1/4 inch by 3/4 inch by 1/4 inch (57 mm by 19 mm by 6 mm) extruded 6005-T5 aluminum with deeply serrated top surface.
3. Ladder Mounting Bracket: 8-1/2 inch by 2 inch by 3 inch by 1/4 inch thick (216 mm by 51 mm by 76 mm by 6 mm) aluminum angle.
4. Floor Brackets: Floor bracket at foot of each stringer, 3 by 2 by 1/4 inch (76 by 51 by 6 mm).
5. Finishes:
   a. Standard: Mill finish on aluminum ladder components.

2.3 FABRICATION

A. Completely fabricate ladder ready for installation before shipment to the site.

B. Completely fabricate handrail components and ship to site ready for field assembly and attachment to ladder.

PART 3 EXECUTION

3.1 EXAMINATION

A. If substrate preparation is the responsibility of another installer, notify Architect of unsatisfactory preparation before proceeding.

B. Examine materials upon arrival at site. Notify the carrier and manufacturer of any damage.

3.2 INSTALLATION

A. Install in accordance with manufacturer's instructions.

3.3 PROTECTION

A. Protect installed products until completion of project.

B. Touch-up, repair or replace damaged products before Substantial Completion.

END OF SECTION 05 51 33

SECTION 05 51 33.16 – INCLINED METAL LADDERS

PART 1 - GENERAL

1.1 SUMMARY

A. Section includes: Aluminum Folding mezzanine access and hatch access ladders

B. Related sections:

1. Section 06100 - Rough Carpentry: Blocking in metal stud walls and partitions for anchorage of inclined ladders.

1.2 REFERENCES

A. American National Standards Institute (ANSI):

1. ANSI A14.3 - Ladders, Fixed, Safety Requirements.

B. American Society for Testing and Materials (ASTM) Publications:

1. ASTM B209 - Aluminum and Aluminum-Alloy Sheet and Plate.
2. ASTM B221 - Aluminum-Alloy Extruded Bar, Rod, Wire, Shape, and Tube.

1.3 SUBMITTALS

A. Provide in accordance with Section 01 33 00 - Submittal Procedures:

1. Product data for inclined ship ladders.

2. Shop drawings showing elevations, dimensions, connections, size and type of fasteners, and fabrication and installation details.

3. Certificate showing compliance with Paragraph 1.4.

4. Installation and maintenance instructions.

1.4 QUALITY ASSURANCE

A. Access ladders shall be designed and installed to comply with ANSI A14.3.

2.1 ACCEPTABLE MANUFACTURERS

A. UPNOVR, Inc., 3 Crane Way, Hooksett, New Hampshire 03106; 603-625-8639. www.upnovr.com

B. Manufacturers of equivalent products submitted and approved in accordance with Section

01 25 13 - Product Substitution Procedures.

2.2 MATERIALS

A. Extruded aluminum: ASTM B221, Alloy 6063 Temper T-6, non-spark.

B. Sheet aluminum: ASTM B209 6063 Temper T-6.

C. Finish: Mill finished aluminum.

2.3 GENERAL FABRICATION

A. Field verify ladder dimensions prior to fabrication.

B. Fabricate to designs indicated on Drawings and to meet performance requirements specified in Paragraph 1.4.

C. Components shall be welded and bolted. Ladder shall not require field assembly.

2.4 INCLINED SHIP LADDER

A. Type:
   1. Folding Mezzanine Access Ladder with handrail; UPNOVR Model No. U- 505
      a. Location: At Mezzanine (Fire Station 5)
      b. Height: Floor to Mezzanine – reference drawings

   2. Folding Hatch Access Ladder with handrail; UPNOVR Model No. U- 506
      a. Location: At Mezzanine (Fire Station 5)
      b. Height: Mezzanine to Roof – reference drawings

B. Angle of inclination: 70 degrees – reference drawings

C. Treads: 6 inches wide by 1/3-4 inches deep by 24 inches wide aluminum channel shaped section with abrasive filled corrugations.

   1. Equally space treads as indicated on Drawings and reviewed shop drawings.

   2. Connect treads to stringers with bolts to allow for future replacement.

D. Stringers: 6 by 2 inches aluminum channel.

E. Handrail: Fabricate from 1-1/4 inches diameter aluminum pipe

   1. Form returns with 6 inches radius.

   2. Attach rail to stringer with pipe sections spaced at approximately 30 inches such that rail projects approximately 6 inches above stringer.

   3. Locate bottom of handrail 36 inches above floor.

4. Extend rail above ladder such that top of rail is 42 inches above mezzanine level.

2.5 ACCESSORIES

A. Support brackets: Support ship ladder with top wall brackets and bottom floor brackets fabricated from 2 by 1/4 inch minimum flat bar aluminum.

PART 3 - EXECUTION

3.1 PREPARATION

A. Prior to fabrication, field verify required dimensions.

B. Coordinate ladder installation with construction of CMU walls specified in Section 04 22 00 - Concrete Unit Masonry to ensure block walls are adequately reinforced and cells grouted structural steel mezzanine and floor framing for attachment of brackets and support of ladder.

C. Insulate dissimilar metals to prevent electrolysis with bituminous paint or non-absorptive isolation pad to prevent contact.

3.2 INSTALLATION

A. Install inclined ladder in accordance with manufacturer's instructions and reviewed shop drawings.

B. Securely anchor support brackets with fasteners of type and size recommended by manufacturer. Place wall brackets at top and floor brackets at bottom of ladder. Place intermediate wall brackets at 48 inches maximum.

C. Ensure ladder is plumb and rigid.

D. After installation inspect ladder to verify proper, secure, and safe installation.

E. Clean ladder using clean water and mild detergent. Do not use abrasive agent, steel wool, or harsh chemicals. Rinse with clean water.

END OF SECTION 05 51 33.16

SECTION 06 65 00 – SIMULATED WOOD PRODUCTS

PART 1 – GENERAL

1.01 SUMMARY

A. Section includes:
   a. Simulated wood trim brackets and mouldings

1.02 REFERENCES

A. America Society for Testing and Materials (ASTM):
   a. ASTM E84-90 Standard Test Method for Surface Burning Characteristics of Building Materials
   b. ASTM G21 – Standard Practice for Determining Resistance of Synthetic Polymeric Materials to Fungi

1.03 RELATED WORK

A. Section 01 77 00 Closeout Procedures
B. Section 01 78 23 Operation and Maintenance Data
C. Section 07 92 00 Joint Sealers
D. Section 09 91 00 Painting

1.04 SUBMITTALS

A. Product Data: Submit manufacturer's descriptive literature, specifications, installation instructions and warranty.
B. Shop Drawings: Submit shop drawings showing layout, profiles and product components, including anchorage, accessories, finish colors and textures.
C. Samples: Submit selection and verification samples for finishes, colors and textures.

1.05 QUALITY ASSURANCE

A. Installer Qualifications: Installer shall be certified in the installation of simulated wood products from Architectural Elements or approved manufacturer.
B. Mock-Up: Install at project site a job mock-up using approved product from approved manufacturer. Mock-up shall represent finish color, size, texture, pattern and workmanship.

1.06 PROJECT CONDITIONS

A. Reference manufacturer for temperature requirements for all products.
B. All products shall be coordinated and field measurements taken and verified prior to fabrication. All measurements shall be recorded on shop drawings.

1.07 DELIVVERY, STORAGE & HANDLING

A. Comply with manufacturer's ordering instructions and lead time requirements to avoid construction delays.
B. Deliver material in manufacturer's original, unopened, undamaged containers with

identification labels intact.

C. Storage and Protection: store material protected from exposure to weather conditions and at temperature and humidity conditions recommended by manufacturer.

1.08 WARRANTY

A. Manufacturer shall be provide a 1 year warranty on all materials, quality of products, durability of products, and workmanship from date of substantial completion.

PART 2 – PRODUCTS

2.01 ACCEPTABLE MANUFACTURES

A. Specifications are based on products of named manufacturers. Manufacturers listed whose product meets or exceeds the specifications may be used on the Project. Other manufacturers must have a minimum of five (5) years experience manufacturing products meeting or exceeding the specifications and comply with Division 1 requirements regarding substitutions to be considered.
   a. Architectural Elements, Inc. (Basis of Specifications)
   b. Provide qualifications for substitutions

2.02 MATERIALS

A. Polyurethane
   a. Material: High-density polymer comparable to kild dried white pine millwork, with higher skin density.
   b. Moisture Resistance: Non-water absorbing
   c. Fire Rating: Fire rated Class 2
   d. Shop finish: Provide moulded units with manufacturer's standard primed finish to receive field applied coating.

B. Accessories
   a. Fasteners: Manufacturer provided trim screws or other fasteners only.
   b. Joint Compound: as recommended by manufacturer, paintable and resistant to exterior weather conditions.
   c. Adhesive: as recommended by manufacturer, paintable and resistant to exterior weather conditions.

C. Source Control
   a. All material to be provided by a single manufacturer.

PART 3 – EXECUTION

3.01 MANUFACTURE'S INSTRUCTIONS

A. Compliance: Comply with manufacturer's product data, including product technical bulletins, product catalog installation instructions and product carton instruction for installation.

3.02 EXAMINATIONS

A. Site Verification of Conditions: Verify substrate conditions, which have been previously installed in accordance with the plans and specifications. Confirm conditions are acceptable for product installation in accordance with manufacturer's instructions.

3.03 PREPARATIONS

A. Surface preparation: prepare substrate surface in accordance with manufacturer's instructions.

3.04 INSTALLATION

A. General: Follow manufacturer's instruction sheets.
B. Material: Fill holes with wood putty, spackle, or bondo and sand for finishing material.
C. Field Applied Coating: Finish with high quality exterior coating.
D. Related Products installation: Refer to other sections listed in Part 1 Related Sections for related products installation.

3.05 CLEANING

A. Remove all temporary coverings and protection of adjacent work areas. Repair or replace damaged installed products. Clean products in accordance with manufacturer's instructions prior to Owner's/Architect's acceptance. Remove and dispose of construction debris from project site.

3.06 PROTECTION

A. Protect installed product and finish surfaces from damage during construction.

3.07 FINISHING

A. Products to be surfaced by the manufacturer with two coats of paid applied, a barrier coat bonded directly to the polyurethane foam and a flat white primer coat.
B. Prepare surface of installed finish product, repair necessary areas to ensure a flat smooth surface free of any contaminates, especially any dirt, grease, or oils. Clean all surfaces with a mild water and ammonia solution prior to painting or as recommended by manufacturer.
C. Apply finish coats of paint – reference Section 09 91 00 or as recommended by manufacturer. Coordinate color selection with Owner/Architect.

END OF SECTION 06 65 00

PART 1 - GENERAL

1.1 RELATED DOCUMENTS

A. Drawings and general provisions of the Contract, including General and Supplementary Conditions and Division 01 Specification Sections, apply to this Section.

1.2 SUMMARY

A. Section Includes: Architectural Aluminum Curtain Wall Systems, including perimeter trims, stools, accessories, shims and anchors, and perimeter sealing of curtain wall framing.

1. Types of Aluminum Curtain Wall include:

a. Basis of Design: Kawneer 1600 Wall System™3 Curtain Wall –2-1/2" x 7-1/2" inside/outside glazed captured format.

B. Related Sections:

1. 07 25 00 “Weather Barrier”
2. 07 92 00 “Joint Sealants”
3. 08 80 00 “Glazed Systems”

1.3 DEFINITIONS

A. Definitions: For fenestration industry standard terminology and definitions refer to American Architectural Manufactures Association (AAMA) – AAMA Glossary (AAMA AG).

1.4 PERFORMANCE REQUIREMENTS

A. General Performance: Comply with performance requirements specified, as determined by testing of glazed aluminum curtain walls representing those indicated for this Project without failure due to defective manufacture, fabrication, installation, or other defects in construction.

1. Glazed aluminum curtain walls shall withstand movements of supporting structure including, but not limited to, story drift, twist, column shortening, long-term creep, and deflection from uniformly distributed and concentrated live loads. Failure also includes the following:

a. Thermal stresses transferring to building structure.
b. Glass breakage.
c. Loosening or weakening of fasteners, attachments, and other components.
d. Failure of operating units.

B. Delegated Design: Design glazed aluminum curtain walls, including comprehensive engineering analysis by a qualified professional engineer, using performance requirements and design criteria indicated.

C. Wind Loads: Provide Curtain Wall system; include anchorage, capable of withstanding wind load design pressures as required by the building code for the region of the project.

D. Air Infiltration: The test specimen shall be tested in accordance with ASTM E 283. Air infiltration rate shall not exceed 0.06 cfm/ft^2 (0.3 l/s · m^2) at a static air pressure differential of 6.24 psf (300 Pa).

E. Water Resistance, (Static): The test specimen shall be tested in accordance with ASTM E 331. There shall be no leakage at a static air pressure differential of 12 psf (575 Pa) as defined in AAMA 501.

F. Water Resistance, (Dynamic): The test specimen shall be tested in accordance with AAMA 501.1. There shall be no leakage at an air pressure differential of 12 psf (575 Pa) as defined in AAMA 501.

G. Uniform Load: A static air design load of 50 psf (2394 Pa) shall be applied in the positive and negative direction in accordance with ASTM E 330. There shall be no deflection in excess of L/175 of the span of any framing member at design load. At structural test load equal to 1.5 times the specified design load, no glass breakage or permanent set in the framing members in excess of 0.2% of their clear spans shall occur.

H. Thermal Transmittance (U-Factor): When tested to AAMA Specification 1503, the thermal transmittance (U-factor) shall not be more than: 0.61 (clear) or Project Specific 2015 IECC BTU/hr/ft^2 /°F per AAMA 507 or 2015 IECC BTU/hr/ft^2 /°F per NFRC 100.

I. Condensation Resistance (CRF): When tested to AAMA Specification 1503, the condensation resistance factor shall not be less than 73$_{frame}$ and 61$_{glass}$ (clear),
or
Condensation Index (I): when tested to CSA-A440-00, the Condensation Index shall not be less than 63$_{frame}$ and 52$_{glass}$ (clear).

1.5 SUBMITTALS

A. Product Data: For each type of product indicated. Include construction details, material descriptions, dimensions of individual components and profiles, and finishes.

B. Shop Drawings: For glazed aluminum curtain walls. Include plans, elevations, sections, full-size details, and attachments to other work.

C. Samples For Initial Selction: For units with factory-applied color finishes.

D. Samples For Verification: For each type of exposed finish required, in manufacturer's standard sizes.

E. Product Test Reports: Based on evaluation of comprehensive tests performed by a qualified preconstruction testing agency, for glazed aluminum curtain walls, indicating compliance with performance requirements.

F. Fabrication Sample: Of each vertical-to-horizontal intersection of aluminum-framed curtain wall systems, made from 12" (304.8 mm) lengths of full-size components and showing details of the following:

1. Joinery

2. Glazing

1.6 QUALITY ASSURANCE

A. Installer Qualifications: Installer who has had successful experience with installation of the same or similar systems required for the project and other projects of similar size and scope.

B. Manufacturer Qualifications: A manufacturer capable of fabricating glazed aluminum curtain walls that meet or exceed performance requirements.

C. Source Limitations: Obtain aluminum curtain wall system through one source from a single manufacturer.

D. Product Options: Information on Drawings and in Specifications establishes requirements for aesthetic effects and performance characteristics of assemblies. Aesthetic effects are indicated by dimensions, arrangements, alignment, and profiles of components and assemblies as they relate to sightlines, to one another, and to adjoining construction.

1. Do not modify intended aesthetic effects, as judged solely by Architect, except with Architect's approval. If revisions are proposed, submit comprehensive explanatory data to Architect for review.

E. Mockups: Build mockups to verify selections made under sample submittals and to demonstrate aesthetic effects and set quality standards for materials and execution.

1. Build mockups for type(s) of curtain wall elevation(s) indicated, in location(s) shown on Drawings.

F. Pre-Installation Conference: Conduct conference at Project site to comply with requirements in Division 01 Section “Project Management and Coordination”.

1.7 PROJECT CONDITIONS

A. Field Measurements: Verify actual locations of structural supports for glazed aluminum curtain walls by field measurements before fabrication and indicate measurements on Shop Drawings.

1.8 WARRANTY

A. Manufacturer’s Warranty: Submit, for Owner’s acceptance, manufacturer’s standard warranty.

1. WARRANTY PERIOD: Two (2) years from Date of Substantial Completion of the project provided however that the Limited Warranty shall begin in no event later than six months from date of shipment by manufacturer.

PART 2 - PRODUCTS

2.1 MANUFACTURERS

A. BASIS-OF-DESIGN PRODUCT:

1. Kawneer Company Inc.

2. 1600 Wall System™3 Curtain Wall.

3. Frame depth options: 2-1/2" x 6" (63.5 x 152.4) or 2-1/2" x 7-1/2" (63.5 x 190.5), inside/outside glazed captured format.

4. Tested to AAMA 501.

B. Subject to compliance with requirements, provide a comparable product by the following:

1. MANUFACTURER: Submit like or equal substitutions to Architect.

C. SUBSTITUTIONS: Refer to Substitutions Section for procedures and submission requirements.

1. Pre-Contract (Bidding Period) Substitutions: Submit written requests ten (10) days prior to bid date.

2. Post-Contract (Construction Period) Substitutions: Submit written request in order to avoid curtain wall installation and construction delays.

3. Product Literature and Drawings: Submit product literature and drawings modified to suit specific project requirements and job conditions.

4. Certificates: Submit certificate(s) certifying substitute manufacturer (1) attesting to adherence to specification requirements for curtain wall system performance criteria, and (2) has been engaged in the design, manufacturer and fabrication of aluminum curtain walls for a period of not less than ten (10) years.

5. Test Reports: Submit test reports verifying compliance with each test requirement required by the project.

6. Samples: Provide samples of typical product sections and finish samples in manufacturer's standard sizes.

D. Substitution Acceptance: Acceptance will be in written form, either as an addendum or modification, and documented by a formal change order signed by the Owner and Contractor.

2.2 MATERIALS

A. Aluminum Extrusions: Alloy and temper recommended by glazed aluminum curtain wall manufacturer for strength, corrosion resistance, and application of required finish and not less than 0.070" (1.8) wall thickness at any location for the main frame and complying with ASTM B 221: 6063-T6 alloy and temper.

B. Aluminum Sheet Alloy: Shall meet the requirements of ASTM B209.

C. Fasteners: Aluminum, nonmagnetic stainless steel or other materials to be non-corrosive and compatible with aluminum window members, trim hardware, anchors, and other components.

D. Anchors, Clips & Accessories: Aluminum, nonmagnetic stainless steel, or zinc-coated steel or iron complying with ASTM B 633 for SC 3 severe service conditions or other suitable zinc coating; provide sufficient strength to withstand design pressure indicated.

E. Pressure Plate: Pressure plate shall be aluminum and fastened to the mullion with stainless steel screws.

F. Reinforcing Members: Aluminum, nonmagnetic stainless steel, or nickel/chrome-plated steel complying with ASTM B 456 for Type SC 3 severe service conditions, or zinc-coated steel or iron complying with ASTM B 633 for SC 3 severe service conditions or other suitable zinc coating; provide sufficient strength to withstand design pressure indicated.

G. Sealant: For sealants required within fabricated curtain wall system, provide permanently elastic, non-shrinking, and non-migrating type recommended by sealant manufacturer for joint size and movement.

H. Thermal Barrier: Verticals shall utilize Kawneer IsoStrut™ consisting of a rigid polymer that provides a mechanical and chemical bond between the thermal break material and extrusion. Horizontals shall utilize a silicone compatible elastomer thermal break separator which provides a minimum 14" (6.3) separation.

I. Tolerances: Reference to tolerances for wall thickness and other cross-sectional dimensions of glazed curtain wall members are nominal and in compliance with AA Aluminum Standards and Data.

2.3 CURTAIN WALL FRAMING

A. Framing Members: Manufacturer's standard extruded- or formed-aluminum framing members of thickness required and reinforced as required to support imposed loads.

1. Glazing System: 4 sided captured.

2. Glazing Plane: Front.

B. Glass: 1" insulating glass option. 1" for Spandrel applications.

C. Brackets and Reinforcements: Manufacturer's standard high-strength aluminum with nonstaining, nonferrous shims for aligning system components.

D. Framing Sealants: Shall be suitable for glazed aluminum curtain wall as recommended by sealant manufacturer.

E. Fasteners and Accessories: Manufacturer's standard corrosion-resistant, nonstaining, nonbleeding fasteners and accessories compatible with adjacent materials. Where exposed shall be stainless steel.

F. Perimeter Anchors: When steel anchors are used, provide insulation between steel material and aluminum material to prevent galvanic action.

G. Packing, Shipping, Handling and Unloading: Deliver materials in manufacturer's original, unopened, undamaged containers with identification labels intact.

H. Storage and Protection: Store materials protected from exposure to harmful weather conditions. Handle curtain wall material and components to avoid damage. Protect curtain wall material against damage from elements, construction activities, and other hazards before, during and after installation.

2.4 GLAZING

A. Glazing: Comply with Division 08 Section “Glazing”. Following glazing options are available.

1. 1600 Wall System™3 Curtain Wall: Inside/outside glazed pressure plate format with 1" (25.4) double glazed insulating glass.

B. Glazing Gaskets: Gaskets to meet the requirements of ASTM C864.

C. Spacers and Setting Blocks: Manufacturer's standard elastomeric type.

D. Bond-Breaker Tape: Manufacturer's standard TFE-fluorocarbon or polyethylene material to which sealants will not develop adhesion.

E. Glazing Sealants: As recommended by manufacturer for joint type.

2.5 FABRICATION

A. Form or extrude aluminum shapes before finishing.

B. Fabricate components that, when assembled, have the following characteristics:

1. Profiles that are sharp, straight, and free of defects or deformations.

2. Accurately fitted joints.

3. Physical and thermal isolation of glazing from framing members.

4. Accommodations for thermal and mechanical movements of glazing and framing to maintain required glazing edge clearances.

5. Provisions for field replacement of glazing from exterior.

6. Fasteners, anchors, and connection devices that are concealed from view to greatest extent possible.

7. Internal weeping system or other means to drain water passing joints, condensation occurring within framing members, and moisture migrating within glazed aluminum curtain wall to exterior.

C. Curtain Wall Framing: Fabricate components for assembly using shear block system following manufacturer's standard installation instructions.

D. After fabrication, clearly mark components to identify their locations in Project according to Shop Drawings.

2.6 ALUMINUM FINISHES

A. Finish designations prefixed by AA comply with the system established by the Aluminum Association for designating aluminum finishes.

B. Factory Finishing:

1. Kawneer Permanodic™ AA-M10C21A44 / AA-M45C22A44, AAMA 611, Architectural Class I Color Anodic Coating (Color #14 Clear).

PART 3 - EXECUTION

3.1 EXAMINATION

A. Examine areas, with Installer present, for compliance with requirements for installation tolerances and other conditions affecting performance of the Work.

B. Proceed with installation only after unsatisfactory conditions have been corrected.

3.2 INSTALLATION

A. General: Install curtain wall systems plumb, level, and true to line, without warp or rack of frames with manufacturer's prescribed tolerances and installation instructions. Provide support and anchor in place.

1. Dissimilar Materials: Provide separation of aluminum materials from sources of corrosion or electrolytic action contact points.

2. Glazing: Glass shall be outside glazed and held in place with extruded aluminum pressure plates anchored to the mullion using stainless steel fasteners spaced no greater than 9" (228.6) on center.

3. Water Drainage: Each light of glass shall be compartmentalized using joint plugs and silicone sealant to divert water to the horizontal weep locations. Weep holes shall be located in the horizontal pressure plates and covers to divert water to the exterior of the building.

B. Related Products Installation Requirements:

1. SEALANTS (PERIMETER): Refer to Joint Treatment (Sealants) Section.

2. GLASS: Refer to Glass and Glazing Section.

a. REFERENCE: ANSI Z97.1, CPSC 16 CFR 1201 and GANA Glazing Manual

3.3 FIELD QUALITY CONTROL

A. Field Tests: Architect shall select curtain wall units to be tested as soon as a representative portion of the project has been installed, glazed, perimeter caulked and cured. Conduct tests for air infiltration and water penetration with manufacturer's representative present. Tests not meeting specified performance requirements and units having deficiencies shall be corrected as part of the contract amount.

1. Testing: Testing shall be performed per AAMA 503 by a qualified independent testing agency. Refer to Testing Section for payment of testing and testing requirements.

a. Air Infiltration Tests: Conduct tests in accordance with ASTM E 783. Allowable air infiltration shall not exceed 1.5 times the amount indicated in the performance requirements or 0.09 cfm/ft^2, which ever is greater.
b. Water Infiltration Tests: Conduct tests in accordance with ASTM E 1105. No uncontrolled water leakage is permitted when tested at a static test pressure of two-thirds the specified water penetration pressure but not less than 8 psf (383 Pa).

B. Manufacturer's Field Services: Upon Owner's written request, provide periodic site visit by manufacturer's field service representative.

3.4 ADJUSTING, CLEANING AND PROTECTION

A. Protection: Protect installed product's finish surfaces from damage during construction. Protect aluminum curtain wall system from damage from grinding and polishing compounds, plaster, lime, acid, cement, or other harmful contaminants.

B. Cleaning: Repair or replace damaged installed products. Clean installed products in accordance with manufacturer's instructions prior to owner's acceptance. Remove construction debris from project site and legally dispose of debris.

C. Remove and replace glass that has been broken, chipped, cracked, abraded, or damaged during construction period.

END OF SECTION 08 44 13

SECTION 08 71 00 – DOOR HARDWARE

PART 1 - GENERAL

1.01 RELATED DOCUMENTS

A. Drawings and general provisions of the Contract, including General and Supplementary Conditions and Division 01 Specification Sections, apply to this Section.

1.02 SUMMARY

A. Section includes:

1. Mechanical and electrified door hardware for:

a. Swinging doors.

2. Electronic access control system components, including:

a. Electronic access control devices.

3. The intent of the hardware specification is to specify the hardware for interior and exterior doors, and to establish a type, continuity, and standard of quality. However, it is the door hardware supplier's responsibility to thoroughly review existing conditions, schedules, specifications, drawings, and other Contract Documents to verify the suitability of the hardware specified.

B. Exclusions: Unless specifically listed in hardware sets, hardware is not specified in this section for:

1. Windows
2. Cabinets (casework), including locks in cabinets
3. Signage
4. Toilet accessories
5. Overhead doors

C. Related Sections:

1. Division 01 Section "Alternates" for alternates affecting this section.
2. Division 07 Section "Joint Sealants" for sealant requirements applicable to threshold installation specified in this section.
3. Division 09 sections for touchup, finishing or refinishing of existing openings modified by this section.
4. Division 13 Section "Radiation Protection" for requirements for lead-lining for door hardware at openings indicated to receive radiation protection.
5. Division 26 sections for connections to electrical power system and for low-voltage wiring.
6. Division 28 sections for coordination with other components of electronic access control system.

1.03 REFERENCES

A. UL - Underwriters Laboratories

1. UL 10B - Fire Test of Door Assemblies
2. UL 10C - Positive Pressure Test of Fire Door Assemblies
3. UL 1784 - Air Leakage Tests of Door Assemblies
4. UL 305 - Panic Hardware

B. DHI - Door and Hardware Institute

1. Sequence and Format for the Hardware Schedule
2. Recommended Locations for Builders Hardware
3. Key Systems and Nomenclature

C. ANSI - American National Standards Institute

1. ANSI/BHMA A156.1 - A156.29, and ANSI/BHMA A156.31 - Standards for Hardware and Specialties

1.04 SUBMITTALS

A. General:

1. Submit in accordance with Conditions of Contract and Division 01 requirements.
2. Highlight, encircle, or otherwise specifically identify on submittals deviations from Contract Documents, issues of incompatibility or other issues which may detrimentally affect the Work.
3. Prior to forwarding submittal, comply with procedures for verifying existing door and frame compatibility for new hardware, as specified in PART 3, “EXAMINATION” article, herein.

B. Action Submittals:

1. Product Data: Technical product data for each item of door hardware, installation instructions, maintenance of operating parts and finish, and other information necessary to show compliance with requirements.
2. Riser and Wiring Diagrams: After final approval of hardware schedule, submit details of electrified door hardware, indicating:

a. Wiring Diagrams: For power, signal, and control wiring and including:
1) Details of interface of electrified door hardware and building safety and security systems.
2) Schematic diagram of systems that interface with electrified door hardware.
3) Point-to-point wiring.
4) Risers.

3. Samples for Verification: If requested by Architect, submit production sample of requested door hardware unit in finish indicated, and tagged with full description for coordination with schedule.

a. Samples will be returned to supplier. Units that are acceptable to Architect may, after final check of operations, be incorporated into Work, within limitations of key coordination requirements.

4. Door Hardware Schedule: Submit schedule with hardware sets in vertical format as illustrated by Sequence of Format for the Hardware Schedule as published by the Door and Hardware Institute. Indicate complete designations of each item required for each door or opening, include:

    a. Door Index; include door number, heading number, and Architects hardware set number.
    b. Opening Lock Function Spreadsheet: List locking device and function for each opening.
    c. Quantity, type, style, function, size, and finish of each hardware item.
    d. Name and manufacturer of each item.
    e. Fastenings and other pertinent information.
    f. Location of each hardware set cross-referenced to indications on Drawings.
    g. Explanation of all abbreviations, symbols, and codes contained in schedule.
    h. Mounting locations for hardware.
    i. Door and frame sizes and materials.
    j. Name and phone number for local manufacturer's representative for each product.
    k. Operational Description of openings with any electrified hardware (locks, exits, electromagnetic locks, electric strikes, automatic operators, door position switches, magnetic holders or closer/holder units, and access control components). Operational description should include operational descriptions for: egress, ingress (access), and fire/smoke alarm connections.
        1) Submittal Sequence: Submit door hardware schedule concurrent with submissions of Product Data, Samples, and Shop Drawings. Coordinate submission of door hardware schedule with scheduling requirements of other work to facilitate fabrication of other work that is critical in Project construction schedule.

5. Key Schedule:

    a. After Keying Conference, provide keying schedule listing levels of keying as well as explanation of key system's function, key symbols used and door numbers controlled.
    b. Use ANSI/BHMA A156.28 “Recommended Practices for Keying Systems” as guideline for nomenclature, definitions, and approach for selecting optimal keying system.
    c. Provide 3 copies of keying schedule for review prepared and detailed in accordance with referenced DHI publication. Include schematic keying diagram and index each key to unique door designations.
    d. Index keying schedule by door number, keyset, hardware heading number, cross keying instructions, and special key stamping instructions.
    e. Provide one complete bitting list of key cuts and one key system schematic illustrating system usage and expansion.
        1) Forward bitting list, key cuts and key system schematic directly to Owner, by means as directed by Owner.

    f. Prepare key schedule by or under supervision of supplier, detailing Owner’s final keying instructions for locks.

6. Templates: After final approval of hardware schedule, provide templates for doors, frames and other work specified to be factory or shop prepared for door hardware installation.

C. Informational Submittals:

1. Qualification Data: For Supplier, Installer and Architectural Hardware Consultant.
2. Product data for electrified door hardware:

a. Certify that door hardware approved for use on types and sizes of labeled fire-rated doors complies with listed fire-rated door assemblies.

3. Warranty: Special warranty specified in this Section.

D. Closeout Submittals:

1. Operations and Maintenance Data: Provide in accordance with Division 01 and include:

a. Complete information on care, maintenance, and adjustment; data on repair and replacement parts, and information on preservation of finishes.
b. Catalog pages for each product.
c. Factory order acknowledgement numbers (for warranty and service)
d. Name, address, and phone number of local representative for each manufacturer.
e. Parts list for each product.
f. Final approved hardware schedule, edited to reflect conditions as-installed.
g. Final keying schedule
h. Copies of floor plans with keying nomenclature
i. As-installed wiring diagrams for each opening connected to power, both low voltage and 110 volts.
j. Copy of warranties including appropriate reference numbers for manufacturers to identify project.

1.05 QUALITY ASSURANCE

A. Supplier Qualifications and Responsibilities: Recognized architectural hardware supplier with record of successful in-service performance for supplying door hardware similar in quantity, type, and quality to that indicated for this Project and that provides certified Architectural Hardware Consultant (AHC) or Door Hardware Consultant (DHC) available to Owner, Architect, and Contractor, at reasonable times during the Work for consultation.

1. Warehousing Facilities: In Project's vicinity.
2. Scheduling Responsibility: Preparation of door hardware and keying schedules.
3. Engineering Responsibility: Preparation of data for electrified door hardware, including Shop Drawings, based on testing and engineering analysis of manufacturer's standard units in assemblies similar to those indicated for this Project.
4. Coordination Responsibility: Assist in coordinating installation of electronic security hardware with Architect and electrical engineers and provide installation and technical data to Architect and other related subcontractors.

a. Upon completion of electronic security hardware installation, inspect and verify that all components are working properly.

B. Architectural Hardware Consultant Qualifications: Person who is experienced in providing consulting services for door hardware installations that are comparable in material, design, and extent to that indicated for this Project and meets these requirements:

1. For door hardware, DHI-certified, Architectural Hardware Consultant (AHC) or Door Hardware Consultant (DHC).
2. Can provide installation and technical data to Architect and other related subcontractors.
3. Can inspect and verify components are in working order upon completion of installation.
4. Capable of producing wiring diagrams.
5. Capable of coordinating installation of electrified hardware with Architect and electrical engineers.

C. Single Source Responsibility: Obtain each type of door hardware from single manufacturer.

D. Fire-Rated Door Openings: Provide door hardware for fire-rated openings that complies with NFPA 80 and requirements of authorities having jurisdiction. Provide only items of door hardware that are listed products tested by Underwriters Laboratories, Intertek Testing Services, or other testing and inspecting organizations acceptable to authorities having jurisdiction for use on types and sizes of doors indicated, based on testing at positive pressure and according to NFPA 252 or UL 10C and in compliance with requirements of fire-rated door and door frame labels.

E. Electrified Door Hardware: Listed and labeled as defined in NFPA 70, Article 100, by testing agency acceptable to authorities having jurisdiction.

F. Accessibility Requirements: For door hardware on doors in an accessible route, comply with governing accessibility regulations cited in “REFERENCES” article, herein.

G. Keying Conference

1. Incorporate keying conference decisions into final keying schedule after reviewing door hardware keying system including:

    a. Function of building, flow of traffic, purpose of each area, degree of security required, and plans for future expansion.
    b. Preliminary key system schematic diagram.
    c. Requirements for key control system.
    d. Requirements for access control.
    e. Address for delivery of keys.

H. Pre-installation Conference

1. Review and finalize construction schedule and verify availability of materials, Installer's personnel, equipment, and facilities needed to make progress and avoid delays.
2. Inspect and discuss preparatory work performed by other trades.
3. Inspect and discuss electrical roughing-in for electrified door hardware.
4. Review sequence of operation for each type of electrified door hardware.
5. Review required testing, inspecting, and certifying procedures.

I. Coordination Conferences:

1. Installation Coordination Conference: Prior to hardware installation, schedule and hold meeting to review questions or concerns related to proper installation and adjustment of door hardware.
2. Electrified Hardware Coordination Conference: Prior to ordering electrified hardware, schedule and hold meeting to coordinate door hardware with security, electrical, doors and frames, and other related suppliers.

1.06 DELIVERY, STORAGE, AND HANDLING

A. Inventory door hardware on receipt and provide secure lock-up for hardware delivered to Project site.

B. Tag each item or package separately with identification coordinated with final door hardware schedule, and include installation instructions, templates, and necessary fasteners with each item or package.

1. Deliver each article of hardware in manufacturer's original packaging.

C. Project Conditions:

1. Maintain manufacturer-recommended environmental conditions throughout storage and installation periods.
2. Provide secure lock-up for door hardware delivered to Project. Control handling and installation of hardware items so that completion of Work will not be delayed by hardware losses both before and after installation.

D. Protection and Damage:

1. Promptly replace products damaged during shipping.
2. Handle hardware in manner to avoid damage, marring, or scratching. Correct, replace or repair products damaged during Work.
3. Protect products against malfunction due to paint, solvent, cleanser, or any chemical agent.

E. Deliver keys to manufacturer of key control system for subsequent delivery to Owner.

F. Deliver keys and permanent cores to Owner by registered mail or overnight package service.

1.07 COORDINATION

A. Coordinate layout and installation of floor-recessed door hardware with floor construction. Cast anchoring inserts into concrete.

B. Installation Templates: Distribute for doors, frames, and other work specified to be factory or shop prepared. Check Shop Drawings of other work to confirm that adequate provisions are made for locating and installing door hardware to comply with indicated requirements.

C. Security: Coordinate installation of door hardware, keying, and access control with Owner's security consultant.

D. Electrical System Roughing-In: Coordinate layout and installation of electrified door hardware with connections to power supplies and building safety and security systems.

E. Existing Openings: Where existing doors, frames and/or hardware are to remain, field verify existing functions, conditions and preparations and coordinate to suit opening conditions and to provide proper door operation.

1.08 WARRANTY

A. Warranty: Manufacturer's standard form in which manufacturer agrees to repair or replace components of door hardware that fail in materials or workmanship within specified warranty period.

1. Warranty Period: Beginning from date of Substantial Completion, for durations indicated.

a. Closers:
1) Mechanical: 25 years
2) Electrified: 2 years.

b. Exit Devices:
   1) Mechanical: 3 years.
   2) Electrified: 1 year.

c. Locksets:
   1) Mechanical: 10 years
   2) Electrified: 1 year.

d. Continuous Hinges: Lifetime warranty.
e. Key Blanks: Lifetime

2. Warranty does not cover damage or faulty operation due to improper installation, improper use or abuse.

1.09 MAINTENANCE

A. Maintenance Tools: Furnish complete set of special tools required for maintenance and adjustment of hardware, including changing of cylinders.

PART 2 - PRODUCTS

2.01 MANUFACTURERS

A. Approval of manufacturers and/or products other than those listed as “Scheduled Manufacturer” or “Acceptable Manufacturers” in the individual article for the product category shall be in accordance with QUALITY ASSURANCE article, herein.

B. Approval of products from manufacturers indicated in “Acceptable Manufacturers” is contingent upon those products providing all functions and features and meeting all requirements of scheduled manufacturer’s product.

C. Where specified hardware is not adaptable to finished shape or size of members requiring hardware, furnish suitable types having same operation and quality as type specified, subject to Architect's approval.

2.02 MATERIALS

A. Fasteners

1. Provide hardware manufactured to conform to published templates, generally prepared for machine screw installation.
2. Furnish screws for installation with each hardware item. Finish exposed (exposed under any condition) screws to match hardware finish, or, if exposed in surfaces of other work, to match finish of this other work including prepared for paint surfaces to receive painted finish.
3. Provide concealed fasteners for hardware units exposed when door is closed except when no standard units of type specified are available with concealed fasteners. Do not use thru-bolts for installation where bolt head or nut on opposite face is exposed in other work unless thru-bolts are required to fasten hardware securely. Review door specification and advise Architect if thru-bolts are required.
4. Install hardware with fasteners provided by hardware manufacturer.

B. Modification and Preparation of Existing Doors: Where existing door hardware is indicated to be removed and reinstalled.

1. Provide necessary fillers, Dutchmen, reinforcements, and fasteners, compatible with existing materials, as required for mounting new opening hardware and to cover existing door and frame preparations.
2. Use materials which match materials of adjacent modified areas.
3. When modifying existing fire-rated openings, provide materials permitted by NFPA 80 as required to maintain fire-rating.

C. Provide screws, bolts, expansion shields, drop plates and other devices necessary for hardware installation.

1. Where fasteners are exposed to view: Finish to match adjacent door hardware material.

D. Cable and Connectors: Hardwired Electronic Access Control Lockset and Exit Device Trim:

1. Data: 24AWG, 4 conductor shielded, Belden 9843, 9841 or comparable.
2. DC Power: 18 AWG, 2 conductor, Belden 8760 or comparable.
3. Provide type of data and DC power cabling required by access control device manufacturer for this installation.
4. Where scheduled in the hardware sets, provide each item of electrified hardware and wire harnesses with sufficient number and wire gauge with standardized Molex plug connectors to accommodate electric function of specified hardware. Provide Molex connectors that plug directly into connectors from harnesses, electric locking and power transfer devices. Provide through-door wire harness for each electrified locking device installed in a door and wire harness for each electrified hinge, electrified continuous hinge, electrified pivot, and electric power transfer for connection to power supplies.

2.03 HINGES

A. Manufacturers and Products:

1. Scheduled Manufacturer and Product: Ives 5BB series.

B. Requirements:

1. Provide hinges conforming to ANSI/BHMA A156.1.
2. 1-3/4 inch (44 mm) thick doors, up to and including 36 inches (914 mm) wide:

a. Exterior: Standard weight, bronze or stainless steel, 4-1/2 inches (114 mm) high
b. Interior: Standard weight, steel, 4-1/2 inches (114 mm) high

3. 1-3/4 inch (44 mm) thick doors over 36 inches (914 mm) wide:

a. Exterior: Heavy weight, bronze/stainless steel, 5 inches (127 mm) high
b. Interior: Heavy weight, steel, 5 inches (127 mm) high

4. 2 inches or thicker doors:

a. Exterior: Heavy weight, bronze or stainless steel, 5 inches (127 mm) high
b. Interior: Heavy weight, steel, 5 inches (127 mm) high

5. Provide three hinges per door leaf for doors 90 inches (2286 mm) or less in height, and one additional hinge for each 30 inches (762 mm) of additional door height.

6. Where new hinges are specified for existing doors or existing frames, provide new hinges of identical size to hinge preparation present in existing door or existing frame.
7. Hinge Pins: Except as otherwise indicated, provide hinge pins as follows:

    a. Steel Hinges: Steel pins
    b. Non-Ferrous Hinges: Stainless steel pins
    c. Out-Swinging Exterior Doors: Non-removable pins
    d. Out-Swinging Interior Lockable Doors: Non-removable pins
    e. Interior Non-lockable Doors: Non-rising pins

8. Width of hinges: 4-1/2 inches (114 mm) at 1-3/4 inch (44 mm) thick doors, and 5 inches (127 mm) at 2 inches (51 mm) or thicker doors. Adjust hinge width as required for door, frame, and wall conditions to allow proper degree of opening.
9. Provide hinges with electrified options as scheduled in the hardware sets. Provide with sufficient number and wire gage to accommodate electric function of specified hardware. Locate electric hinge at second hinge from bottom or nearest to electrified locking component.
10. Provide mortar guard for each electrified hinge specified.
11. Provide spring hinges where specified. Provide two spring hinges and one bearing hinge per door leaf for doors 90 inches (2286 mm) or less in height. Provide one additional bearing hinge for each 30 inches (762 mm) of additional door height.

2.04 CONTINUOUS HINGES

A. Aluminum Geared

1. Manufacturers:

    a. Scheduled Manufacturer: Ives.

2. Requirements:

    a. Provide aluminum geared continuous hinges conforming to ANSI/BHMA A156.26, Grade 1.
    b. Provide aluminum geared continuous hinges, where specified in the hardware sets, fabricated from 6063-T6 aluminum.
    c. Provide split nylon bearings at each hinge knuckle for quiet, smooth, self-lubricating operation.
    d. Provide hinges capable of supporting door weights up to 450 pounds, and successfully tested for 1,500,000 cycles.
    e. On fire-rated doors, provide aluminum geared continuous hinges that are classified for use on rated doors by testing agency acceptable to authority having jurisdiction.
    f. Provide aluminum geared continuous hinges with electrified option scheduled in the hardware sets. Provide with sufficient number and wire gage to accommodate electric function of specified hardware.
    g. Install hinges with fasteners supplied by manufacturer.
    h. Provide hinges 1 inch (25 mm) shorter in length than nominal height of door, unless otherwise noted or door details require shorter length and with symmetrical hole pattern.

2.05 ELECTRIC POWER TRANSFER

A. Manufacturers:

a. Scheduled Manufacturer: Von Duprin EPT-10.

B. Provide power transfer with electrified options as scheduled in the hardware sets. Provide with number and gage of wires sufficient to accommodate electric function of specified hardware.

C. Locate electric power transfer per manufacturer's template and UL requirements, unless interference with operation of door or other hardware items.

2.06 FLUSH BOLTS

A. Manufacturers:

1. Scheduled Manufacturer: Ives.

B. Requirements:

1. Provide automatic, constant latching, and manual flush bolts with forged bronze or stainless-steel face plates, extruded brass levers, and with wrought brass guides and strikes. Provide 12 inch (305 mm) steel or brass rods at doors up to 90 inches (2286 mm) in height. For doors over 90 inches (2286 mm) in height increase top rods by 6 inches (152 mm) for each additional 6 inches (152 mm) of door height. Provide dust-proof strikes at each bottom flush bolt.

2.07 CYLINDRICAL LOCKS

A. Manufacturers and Products:

1. Scheduled Manufacturer and Product: Schlage ND series.
2. Acceptable Manufacturers and Products: Sargent 10-Line, Best 93k

B. Requirements:

1. Provide cylindrical locks conforming to ANSI/BHMA A156.2 Series 4000, Grade 1, and UL Listed for 3 hour fire doors.
2. Cylinders: Refer to "KEYING" article, herein.
3. Provide locks with standard 2-3/4 inches (70 mm) backset, unless noted otherwise, with 1/2 inch latch throw. Provide proper latch throw for UL listing at pairs.
4. Provide locksets with separate anti-rotation thru-bolts, and no exposed screws.
5. Provide independently operating levers with two external return spring cassettes mounted under roses to prevent lever sag.
6. Provide standard ASA strikes unless extended lip strikes are necessary to protect trim.
7. Provide electrified options as scheduled in the hardware sets.
8. Lever Trim: Solid cast levers without plastic inserts and wrought roses on both sides.

a. Lever Design: Schlage RHODES.

2.08 MORTISE LOCKS – NARROW STYLE

A. Manufacturer and Product:

1. Scheduled Manufacturer and Product: Accurate 8700/8800 series.
2. Acceptable Manufacturers and Products: No Substitute.

B. Requirements:

1. Provide narrow style mortise locks conforming to ANSI/BHMA A156.13, Grade 1 Operational and manufactured from heavy gauge steel, containing components of steel with zinc dichromate plating for corrosion resistance. Cylinders: Refer to “KEYING” article, herein.
2. Provide locks with necessary backset as required for door detail with full 3/4 inch (19 mm) throw stainless steel mechanical anti-friction latchbolt. Provide deadbolt with full 1 inch (25 mm) throw, constructed of stainless steel.
3. Provide standard ASA strikes unless extended lip strikes are necessary to protect trim.
4. Lever Trim: Matching levers and roses or escutcheons from manufacturer of standard mortise locks. Provide all necessary fasteners, spindles, and parts to make complete functioning unit.

    a. Lever Design: Match lock standard.

2.09 EXIT DEVICES

A. Manufacturers and Products:

1. Scheduled Manufacturer and Product: Von Duprin 99/33A series.
2. Acceptable Manufacturers and Products: Sargent 80 series.

B. Requirements:

1. Provide exit devices tested to ANSI/BHMA A156.3 Grade 1 and UL listed for Panic Exit or Fire Exit Hardware.
2. Cylinders: Refer to “KEYING” article, herein.
3. Provide touchpad type exit devices, fabricated of brass, bronze, stainless steel, or aluminum, plated to standard architectural finishes to match balance of door hardware.
4. Touchpad must extend a minimum of one half of door width. No plastic inserts are allowed in touchpads.
5. Provide exit devices with deadlatching feature for security and for future addition of alarm kits and/or other electrified requirements.
6. Provide flush end caps for exit devices.
7. Provide exit devices with manufacturer’s approved strikes.
8. Provide exit devices cut to door width and height. Install exit devices at height recommended by exit device manufacturer, allowable by governing building codes, and approved by Architect.
9. Mount mechanism case flush on face of doors, or provide spacers to fill gaps behind devices. Where glass trim or molding projects off face of door, provide glass bead kits.
10. Provide cylinder or hex-key dogging as specified at non fire-rated openings.
11. Provide factory drilled weep holes for exit devices used in full exterior application, highly corrosive areas, and where noted in hardware sets.
12. Provide electrified options as scheduled.
13. Top latch mounting: double or single tab mount for steel doors, face mount for aluminum doors eliminating requirement of tabs, and double tab mount for wood doors.

14. Provide exit devices with optional trim designs to match other lever and pull designs used on the project.

2.10 CYLINDERS

A. Manufacturers and Products:

1. Scheduled Manufacturer: Sargent.
2. Acceptable Manufacturers and Products: None.

B. Requirements:

1. Provide cylinders/cores, compliant with ANSI/BHMA A156.5; latest revision; cylinder face finished to match lockset, manufacturer's series as indicated. Refer to "KEYING" article, herein.
2. Provide cylinders in the below-listed configuration(s), distributed throughout the Project as indicated.

    a. Provide cylinders/cores to match existing.

2.11 KEYING

A. Provide a factory registered keying system, complying with guidelines in ANSI/BHMA A156.28, incorporating decisions made at keying conference.

B. Factory registered existing system**:** Provide cylinders/cores keyed into Owner's existing factory registered keying system.

C. Comply with guidelines in ANSI/BHMA A156.28, incorporating decisions made at keying conference.

D. Requirements:

1. Provide permanent cylinders/cores keyed by the manufacturer according to the following key system.

    a. Master Keying system as directed by the Owner.

2. Forward bitting list and keys separately from cylinders, by means as directed by Owner. Failure to comply with forwarding requirements will be cause for replacement of cylinders/cores involved at no additional cost to Owner.
3. Provide keys with the following features:

    a. Material: Nickel silver; minimum thickness of .107-inch (2.3mm)
    b. Geographically Exclusive: Where High Security or Security cylinders/cores are indicated, provide nationwide, geographically exclusive key system complying with the following restrictions.

4. Identification:

    a. Mark permanent cylinders/cores and keys with applicable blind code per DHI publication "Keying Systems and Nomenclature" for identification. Do not provide blind code marks with actual key cuts.
    b. Identification stamping provisions must be approved by the Architect and Owner.

c. Stamp cylinders/cores and keys with Owner's unique key system facility code as established by the manufacturer; key symbol and embossed or stamped with "DO NOT DUPLICATE" along with the "PATENTED" or patent number to enforce the patent protection.
d. Failure to comply with stamping requirements will be cause for replacement of keys involved at no additional cost to Owner.
e. Forward permanent cylinders/cores to Owner, separately from keys, by means as directed by Owner.

5. Quantity: Furnish in the following quantities.

a. Change (Day) Keys: 3 per cylinder/core.
b. Master Keys: 6.

2.12 DOOR CLOSERS LCN 4050

A. Manufacturers and Products:

1. Scheduled Manufacturer and Product: LCN 4050 series.
2. Acceptable Manufacturers and Products: Norton 7500 series, Sargent 351 series.

B. Requirements:

1. Provide door closers conforming to ANSI/BHMA A156.4 Grade 1 requirements by BHMA certified independent testing laboratory. ISO 9000 certify closers. Stamp units with date of manufacture code.
2. Provide door closers with fully hydraulic, full rack and pinion action with cast aluminum cylinder.
3. Closer Body: 1-1/2 inch (38 mm) diameter with 11/16 inch (17 mm) diameter heat-treated pinion journal and full complement bearings.
4. Hydraulic Fluid: Fireproof, passing requirements of UL10C, and all weather requiring no seasonal closer adjustment for temperatures ranging from 120 degrees F to -30 degrees F.
5. Spring Power: Continuously adjustable over full range of closer sizes, and providing reduced opening force as required by accessibility codes and standards.
6. Hydraulic Regulation: By tamper-proof, non-critical valves, with separate adjustment for latch speed, general speed, and back check.
7. Pressure Relief Valve (PRV) Technology: Not permitted.
8. Provide stick on templates, special templates, drop plates, mounting brackets, or adapters for arms as required for details, overhead stops, and other door hardware items interfering with closer mounting.

2.13 DOOR TRIM

A. Manufacturers:

1. Scheduled Manufacturer: Ives.

B. Requirements:

1. Provide push plates 4 inches (102 mm) wide by 16 inches (406 mm) high by 0.050 inch (1 mm) thick and beveled 4 edges. Where width of door stile prevents use of 4 inches (102 mm) wide plate, adjust width to fit.

2. Provide push bars of solid bar stock, diameter and length as scheduled. Provide push bars of sufficient length to span from center to center of each stile. Where required, mount back to back with pull.
3. Provide offset pulls of solid bar stock, diameter and length as scheduled. Where required, mount back to back with push bar.
4. Provide flush pulls as scheduled. Where required, provide back-to-back mounted model.
5. Provide pulls of solid bar stock, diameter and length as scheduled. Where required, mount back to back with push bar.
6. Provide pull plates 4 inches (102 mm) wide by 16 inches (406 mm) high by 0.050 inch (1 mm) thick, beveled 4 edges, and prepped for pull. Where width of door stile prevents use of 4 inches (102 mm) wide plate, adjust width to fit.
7. Provide wire pulls of solid bar stock, diameter and length as scheduled.
8. Provide decorative pulls as scheduled. Where required, mount back to back with pull.

2.14 PROTECTION PLATES

A. Manufacturers:

1. Scheduled Manufacturer: Ives.

B. Requirements:

1. Provide kick plates, mop plates, and armor plates minimum of 0.050 inch (1 mm) thick, beveled four edges as scheduled. Furnish with sheet metal or wood screws, finished to match plates.
2. Sizes of plates:

    a. Kick Plates: 10 inches (254 mm) high by 2 inches (51 mm) less width of door on single doors, 1 inch (25 mm) less width of door on pairs
    b. Mop Plates: 4 inches (102 mm) high by 2 inches (51 mm) less width of door on single doors, 1 inch (25 mm) less width of door on pairs
    c. Armor Plates: 36 inches (914 mm) high by 2 inches (51 mm) less width of door on single doors, 1 inch (25 mm) less width of door on pairs

2.15 OVERHEAD STOPS AND OVERHEAD STOP/HOLDERS

A. Manufacturers:

1. Scheduled Manufacturers: Glynn-Johnson.

B. Requirements:

1. Provide heavy duty concealed mounted overhead stop or holder as specified for exterior and interior vestibule single acting doors.
2. Provide heavy duty concealed mounted overhead stop or holder as specified for double acting doors.
3. Provide heavy or medium duty and concealed or surface mounted overhead stop or holder for interior doors as specified. Provide medium duty surface mounted overhead stop for interior doors and at any door that swings more than 140 degrees before striking wall, open against equipment, casework, sidelights, and where conditions do not allow wall stop or floor stop presents tripping hazard.
4. Where overhead holders are specified provide friction type at doors without closer and positive type at doors with closer.

2.16 DOOR STOPS AND HOLDERS

A. Manufacturers:

1. Scheduled Manufacturer: Ives.

B. Provide door stops at each door leaf:

1. Provide wall stops wherever possible. Provide convex type where mortise type locks are used and concave type where cylindrical type locks are used.
2. Where a wall stop cannot be used, provide universal floor stops for low or high rise options.
3. Where wall or floor stop cannot be used, provide medium duty surface mounted overhead stop.

2.17 THRESHOLDS, SEALS, DOOR SWEEPS, AUTOMATIC DOOR BOTTOMS, AND GASKETING

A. Manufacturers:

1. Scheduled Manufacturer: Zero International.

B. Requirements:

1. Provide thresholds, weather-stripping (including door sweeps, seals, and astragals) and gasketing systems (including smoke, sound, and light) as specified and per architectural details. Match finish of other items.
2. Smoke- and Draft-Control Door Assemblies: Where smoke- and draft-control door assemblies are required, provide door hardware that meets requirements of assemblies tested according to UL 1784 and installed in compliance with NFPA 105.
3. Size of thresholds:

    a. Saddle Thresholds: 1/2 inch (13 mm) high by jamb width by door width
    b. Bumper Seal Thresholds: 1/2 inch (13 mm) high by 5 inches (127 mm) wide by door width

4. Provide door sweeps, seals, astragals, and auto door bottoms only of type where resilient or flexible seal strip is easily replaceable and readily available.

2.18 SILENCERS

A. Manufacturers:

1. Scheduled Manufacturer: Ives.

B. Requirements:

1. Provide "push-in" type silencers for hollow metal or wood frames.
2. Provide one silencer per 30 inches (762 mm) of height on each single frame, and two for each pair frame.
3. Omit where gasketing is specified.

2.19 DOOR POSITION SWITCHES

A. Manufacturers:

1. Scheduled Manufacturer: Schlage.

B. Requirements:

1. Provide recessed or surface mounted type door position switches as specified.
2. Coordinate door and frame preparations with door and frame suppliers. If switches are being used with magnetic locking device, provide minimum of 4 inches (102 mm) between switch and magnetic locking device.

2.20 FINISHES

A. Finish: BHMA 626/652 (US26D); except:

1. Hinges at Exterior Doors: BHMA 630 (US32D)
2. Continuous Hinges: BHMA 628 (US28)
3. Push Plates, Pulls, and Push Bars: BHMA 630 (US32D)
4. Protection Plates: BHMA 630 (US32D)
5. Overhead Stops and Holders: BHMA 630 (US32D)
6. Door Closers: Powder Coat to Match
7. Wall Stops: BHMA 630 (US32D)
8. Weatherstripping: Clear Anodized Aluminum
9. Thresholds: Mill Finish Aluminum

PART 3 - EXECUTION

3.01 EXAMINATION

A. Prior to installation of hardware, examine doors and frames, with Installer present, for compliance with requirements for installation tolerances, labeled fire-rated door assembly construction, wall and floor construction, and other conditions affecting performance.

B. Examine roughing-in for electrical power systems to verify actual locations of wiring connections before electrified door hardware installation.

C. Proceed with installation only after unsatisfactory conditions have been corrected.

3.02 INSTALLATION

A. Mount door hardware units at heights to comply with the following, unless otherwise indicated or required to comply with governing regulations.

1. Standard Steel Doors and Frames: ANSI/SDI A250.8.
2. Custom Steel Doors and Frames: HMMA 831.
3. Wood Doors: DHI WDHS.3, "Recommended Locations for Architectural Hardware for Wood Flush Doors."

B. Install each hardware item in compliance with manufacturer’s instructions and recommendations, using only fasteners provided by manufacturer.

C. Do not install surface mounted items until finishes have been completed on substrate. Protect all installed hardware during painting.

D. Set units level, plumb and true to line and location. Adjust and reinforce attachment substrate as necessary for proper installation and operation.

E. Drill and countersink units that are not factory prepared for anchorage fasteners. Space fasteners and anchors according to industry standards.

F. Install operating parts so they move freely and smoothly without binding, sticking, or excessive clearance.

G. Hinges: Install types and in quantities indicated in door hardware schedule but not fewer than quantity recommended by manufacturer for application indicated or one hinge for every 30 inches (750 mm) of door height, whichever is more stringent, unless other equivalent means of support for door, such as spring hinges or pivots, are provided.

H. Intermediate Offset Pivots: Where offset pivots are indicated, provide intermediate offset pivots in quantities indicated in door hardware schedule but not fewer than one intermediate offset pivot per door and one additional intermediate offset pivot for every 30 inches (750 mm) of door height greater than 90 inches (2286 mm).

I. Lock Cylinders: Install construction cores to secure building and areas during construction period.

1. Replace construction cores with permanent cores as indicated in keying section.
2. Furnish permanent cores to Owner for installation.

J. Wiring: Coordinate with Division 26, ELECTRICAL sections for:

1. Conduit, junction boxes and wire pulls.
2. Connections to and from power supplies to electrified hardware.
3. Connections to fire/smoke alarm system and smoke evacuation system.
4. Connection of wire to door position switches and wire runs to central room or area, as directed by Architect.
5. Testing and labeling wires with Architect’s opening number.

K. Key Control System: Tag keys and place them on markers and hooks in key control system cabinet, as determined by final keying schedule.

L. Door Closers: Mount closers on room side of corridor doors, inside of exterior doors, and stair side of stairway doors from corridors. Mount closers so they are not visible in corridors, lobbies and other public spaces unless approved by Architect.

M. Closer/Holders: Mount closer/holders on room side of corridor doors, inside of exterior doors, and stair side of stairway doors.

N. Power Supplies: Locate power supplies as indicated or, if not indicated, above accessible ceilings or in equipment room, or alternate location as directed by Architect.

O. Thresholds: Set thresholds in full bed of sealant complying with requirements specified in Division 07 Section "Joint Sealants."

P. Stops: Provide floor stops for doors unless wall or other type stops are indicated in door hardware schedule. Do not mount floor stops where they may impede traffic or present tripping hazard.

Q. Perimeter Gasketing: Apply to head and jamb, forming seal between door and frame.

R. Meeting Stile Gasketing: Fasten to meeting stiles, forming seal when doors are closed.

S. Door Bottoms: Apply to bottom of door, forming seal with threshold when door is closed.

3.03 FIELD QUALITY CONTROL

A. Engage qualified manufacturer trained representative to perform inspections and to prepare inspection reports.

1. Representative will inspect door hardware and state in each report whether installed work complies with or deviates from requirements, including whether door hardware is properly installed and adjusted.

3.04 ADJUSTING

A. Initial Adjustment: Adjust and check each operating item of door hardware and each door to ensure proper operation or function of every unit. Replace units that cannot be adjusted to operate as intended. Adjust door control devices to compensate for final operation of heating and ventilating equipment and to comply with referenced accessibility requirements.

1. Door Closers: Adjust sweep period to comply with accessibility requirements and requirements of authorities having jurisdiction.

B. Occupancy Adjustment: Approximately three to six months after date of Substantial Completion, Installer's Architectural Hardware Consultant must examine and readjust each item of door hardware, including adjusting operating forces, as necessary to ensure function of doors and door hardware.

3.05 CLEANING AND PROTECTION

A. Clean adjacent surfaces soiled by door hardware installation.

B. Clean operating items as necessary to restore proper function and finish.

C. Provide final protection and maintain conditions that ensure door hardware is without damage or deterioration at time of Substantial Completion.

3.06 DOOR HARDWARE SCHEDULE

A. Hardware items are referenced in the following hardware. Refer to the above-specifications for special features, options, cylinders/keying, and other requirements.

B. Hardware Sets:

Hardware Group No. 001
PROVIDE EACH RU DOOR(S) WITH THE FOLLOWING:

QTY		DESCRIPTION	CATALOG NUMBER	FINISH	MFR
1	EA	MORTISE CYLINDER	MATCH EXISTING CORE TYPE X CONSTRUCTION CORE	626	SAR
1	EA	PERMANENT CORE	MATCH EXISTING KEYWAY	626	SAR
1	EA	NOTE	REMAINDER OF HARDWARE BY DOOR MANUFACTURER		

-Coordinate hardware with door MFR.

Hardware Group No. 002
PROVIDE EACH BDP DOOR(S) WITH THE FOLLOWING:

QTY		DESCRIPTION	CATALOG NUMBER	FINISH	MFR
1	EA	MORTISE CYLINDER	MATCH EXISTING CORE TYPE X CONSTRUCTION CORE	626	SAR
1	EA	PERMANENT CORE	MATCH EXISTING KEYWAY	626	SAR
1	EA	NOTE	REMAINDER OF HARDWARE BY DOOR MANUFACTURER		

Hardware Group No. 103
PROVIDE EACH SGL DOOR(S) WITH THE FOLLOWING:

QTY		DESCRIPTION	CATALOG NUMBER	FINISH	MFR
3	EA	HINGE	5BB1 4.5 X 4.5	652	IVE
1	EA	ENTRANCE LOCK	ND53D RHO (MATCH EXISTING CORE TYPE)	626	SCH
1	EA	PERMANENT CORE	MATCH EXISTING KEYWAY	626	SAR
1	EA	WALL STOP	WS406/407CCV	630	IVE
1	EA	GASKETING	488S PSA H & J (USE SILENCERS @ NON-RATED DOORS)	BK	ZER

Hardware Group No. 201
PROVIDE EACH SGL DOOR(S) WITH THE FOLLOWING:

QTY		DESCRIPTION	CATALOG NUMBER	FINISH	MFR
3	EA	HINGE	5BB1 4.5 X 4.5	652	IVE
1	EA	STOREROOM LOCK	ND80D RHO (MATCH EXISTING CORE TYPE)	626	SCH
1	EA	PERMANENT CORE	MATCH EXISTING KEYWAY	626	SAR
1	EA	SURFACE CLOSER	4050 RW/PA X MTG BRKT, SPCR & PLATE AS REQ	689	LCN
1	EA	PROTECTION PLATE	8400 10" X 2" LDW B-CS	630	IVE
1	EA	WALL STOP	WS406/407CCV	630	IVE
1	EA	GASKETING	488S PSA H & J (USE SILENCERS @ NON-RATED DOORS)	BK	ZER

Hardware Group No. 205
PROVIDE EACH SGL DOOR(S) WITH THE FOLLOWING:

QTY		DESCRIPTION	CATALOG NUMBER	FINISH	MFR
3	EA	HINGE	5BB1HW 4.5 X 4.5 NRP	630	IVE
1	EA	STOREROOM LOCK	ND80D RHO (MATCH EXISTING CORE TYPE)	626	SCH
1	EA	PERMANENT CORE	MATCH EXISTING KEYWAY	626	SAR
1	EA	SURFACE CLOSER	4050 SCUSH X MTG BRKT, SPCR & PLATE AS REQ	689	LCN
1	EA	PROTECTION PLATE	8400 10" X 2" LDW B-CS	630	IVE
1	EA	RAIN DRIP	142A DW + 4" (OMIT AT COVERED SPACES)	AA	ZER
1	EA	GASKETING	328AA H & J	AA	ZER
1	EA	DOOR SWEEP	39A LENGTH AS REQ	A	ZER
1	EA	THRESHOLD	655A LENGTH AS REQ	A	ZER

Hardware Group No. 301
PROVIDE EACH SGL DOOR(S) WITH THE FOLLOWING:

QTY		DESCRIPTION	CATALOG NUMBER	FINISH	MFR
3	EA	HINGE	5BB1 4.5 X 4.5	652	IVE
1	EA	PRIVACY LOCK	ND40S RHO	626	SCH
1	EA	SURFACE CLOSER	4050 RW/PA X MTG BRKT, SPCR & PLATE AS REQ	689	LCN
1	EA	PROTECTION PLATE	8400 10" X 2" LDW B-CS	630	IVE
1	EA	WALL STOP	WS406/407CCV	630	IVE
1	EA	GASKETING	488S PSA H & J (USE SILENCERS @ NON-RATED DOORS)	BK	ZER

Hardware Group No. 303
PROVIDE EACH SGL DOOR(S) WITH THE FOLLOWING:

QTY		DESCRIPTION	CATALOG NUMBER	FINISH	MFR
3	EA	HINGE	5BB1 4.5 X 4.5	652	IVE
1	EA	PRIVACY LOCK	ND40S RHO	626	SCH
1	EA	WALL STOP	WS406/407CCV	630	IVE
1	EA	GASKETING	488S PSA H & J (USE SILENCERS @ NON-RATED DOORS)	BK	ZER

Hardware Group No. 303G
PROVIDE EACH SGL DOOR(S) WITH THE FOLLOWING:

QTY		DESCRIPTION	CATALOG NUMBER	FINISH	MFR
3	EA	HINGE	5BB1 4.5 X 4.5	652	IVE
1	EA	PRIVACY LOCK	ND40S RHO	626	SCH
1	EA	WALL STOP	WS406/407CCV	630	IVE
1	EA	DOOR BOTTOM	369AA LENGTH AS REQ	AA	ZER
1	EA	GASKETING	188S PSA H & J	BK	ZER

Hardware Group No. 303GS
PROVIDE EACH SGL DOOR(S) WITH THE FOLLOWING:

QTY		DESCRIPTION	CATALOG NUMBER	FINISH	MFR
3	EA	HINGE	5BB1 4.5 X 4.5	652	IVE
1	EA	PRIVACY LOCK	ND40S RHO	626	SCH
1	EA	OH STOP	900S SERIES X SIZE & MOUNTING AS REQ	630	GLY
1	EA	DOOR BOTTOM	369AA LENGTH AS REQ	AA	ZER
1	EA	GASKETING	188S PSA H & J	BK	ZER

Hardware Group No. 307
PROVIDE EACH SGL DOOR(S) WITH THE FOLLOWING:

QTY		DESCRIPTION	CATALOG NUMBER	FINISH	MFR
3	EA	HINGE	5BB1 4.5 X 4.5	652	IVE
1	EA	PRIVACY LOCK	ND40S RHO	626	SCH
1	EA	OH STOP	900S SERIES X SIZE & MOUNTING AS REQ	630	GLY
1	EA	SURFACE CLOSER	4050 RW/PA X MTG BRKT, SPCR & PLATE AS REQ	689	LCN
1	EA	PROTECTION PLATE	8400 10" X 2" LDW B-CS	630	IVE
1	EA	WALL STOP	WS406/407CCV	630	IVE
1	EA	GASKETING	488S PSA H & J (USE SILENCERS @ NON-RATED DOORS)	BK	ZER

Hardware Group No. 401
PROVIDE EACH SGL DOOR(S) WITH THE FOLLOWING:

QTY		DESCRIPTION	CATALOG NUMBER	FINISH	MFR
3	EA	HINGE	5BB1 4.5 X 4.5	652	IVE
1	EA	PASSAGE SET	ND10D RHO	626	SCH
1	EA	SURFACE CLOSER	4050 RW/PA X MTG BRKT, SPCR & PLATE AS REQ	689	LCN
1	EA	PROTECTION PLATE	8400 10" X 2" LDW B-CS	630	IVE
1	EA	WALL STOP	WS406/407CCV	630	IVE
1	EA	GASKETING	488S PSA H & J (USE SILENCERS @ NON-RATED DOORS)	BK	ZER

Hardware Group No. 403
PROVIDE EACH SGL DOOR(S) WITH THE FOLLOWING:

QTY		DESCRIPTION	CATALOG NUMBER	FINISH	MFR
3	EA	HINGE	5BB1 4.5 X 4.5	652	IVE
1	EA	PASSAGE SET	ND10D RHO	626	SCH
1	EA	WALL STOP	WS406/407CCV	630	IVE
1	EA	GASKETING	488S PSA H & J (USE SILENCERS @ NON-RATED DOORS)	BK	ZER

Hardware Group No. 405
PROVIDE EACH SGL DOOR(S) WITH THE FOLLOWING:

QTY		DESCRIPTION	CATALOG NUMBER	FINISH	MFR
3	EA	HINGE	5BB1 4.5 X 4.5	630	IVE
1	EA	PASSAGE SET	ND10D RHO	626	SCH
1	EA	SURFACE CLOSER	4050 RW/PA X MTG BRKT, SPCR & PLATE AS REQ	689	LCN
1	EA	PROTECTION PLATE	8400 10" X 2" LDW B-CS	630	IVE
1	EA	WALL STOP	WS406/407CCV	630	IVE
1	EA	RAIN DRIP	142A DW + 4" (OMIT AT COVERED SPACES)	AA	ZER
1	SET	SEALS	328AA H & J	AL	ZER
1	EA	DOOR SWEEP	39A LENGTH AS REQ	A	ZER
1	EA	THRESHOLD	655A LENGTH AS REQ	A	ZER

Hardware Group No. 407
PROVIDE EACH SGL DOOR(S) WITH THE FOLLOWING:

QTY		DESCRIPTION	CATALOG NUMBER	FINISH	MFR
3	EA	HINGE	5BB1 4.5 X 4.5	652	IVE
1	EA	PASSAGE SET	ND10D RHO	626	SCH
1	EA	OH STOP	900S SERIES X SIZE & MOUNTING AS REQ	630	GLY
1	EA	SURFACE CLOSER	4050 RW/PA X MTG BRKT, SPCR & PLATE AS REQ	689	LCN
1	EA	PROTECTION PLATE	8400 10" X 2" LDW B-CS	630	IVE
1	EA	GASKETING	488S PSA H & J (USE SILENCERS @ NON-RATED DOORS)	BK	ZER

Hardware Group No. 500S1
PROVIDE EACH PR DOOR(S) WITH THE FOLLOWING:

QTY		DESCRIPTION	CATALOG NUMBER	FINISH	MFR
6	EA	HINGE	5BB1 4.5 X 4.5	652	IVE
2	EA	MANUAL FLUSH BOLT	FB458-12"	626	IVE
1	EA	DUST PROOF STRIKE	DP2	626	IVE
1	EA	CLASSROOM LOCK	ND70D (MATCH EXISTING CORE TYPE)	626	SCH
1	EA	PERMANENT CORE	MATCH EXISTING KEYWAY	626	SAR
1	EA	OH STOP	900S SERIES X SIZE & MOUNTING AS REQ	630	GLY
1	EA	SURFACE CLOSER	4050 RW/PA X MTG BRKT, SPCR & PLATE AS REQ	689	LCN
2	EA	PROTECTION PLATE	8400 10" X 1" LDW B-CS	630	IVE
1	EA	WALL STOP	WS406/407CCV	630	IVE
1	EA	GASKETING	488S PSA H & J (USE SILENCERS @ NON-RATED DOORS)	BK	ZER

Hardware Group No. 501
PROVIDE EACH SGL DOOR(S) WITH THE FOLLOWING:

QTY		DESCRIPTION	CATALOG NUMBER	FINISH	MFR
3	EA	HINGE	5BB1 4.5 X 4.5	652	IVE
1	EA	CLASSROOM LOCK	ND70D (MATCH EXISTING CORE TYPE)	626	SCH
1	EA	PERMANENT CORE	MATCH EXISTING KEYWAY	626	SAR
1	EA	SURFACE CLOSER	4050 RW/PA X MTG BRKT, SPCR & PLATE AS REQ	689	LCN
1	EA	PROTECTION PLATE	8400 10" X 2" LDW B-CS	630	IVE
1	EA	WALL STOP	WS406/407CCV	630	IVE
1	EA	GASKETING	488S PSA H & J (USE SILENCERS @ NON-RATED DOORS)	BK	ZER

Hardware Group No. 503
PROVIDE EACH SGL DOOR(S) WITH THE FOLLOWING:

QTY		DESCRIPTION	CATALOG NUMBER	FINISH	MFR
3	EA	HINGE	5BB1 4.5 X 4.5	652	IVE
1	EA	CLASSROOM LOCK	ND70D (MATCH EXISTING CORE TYPE)	626	SCH
1	EA	PERMANENT CORE	MATCH EXISTING KEYWAY	626	SAR
1	EA	WALL STOP	WS406/407CCV	630	IVE
1	EA	GASKETING	488S PSA H & J (USE SILENCERS @ NON-RATED DOORS)	BK	ZER

Hardware Group No. 505
PROVIDE EACH SGL DOOR(S) WITH THE FOLLOWING:

QTY		DESCRIPTION	CATALOG NUMBER	FINISH	MFR
3	EA	HINGE	5BB1HW 4.5 X 4.5 NRP	630	IVE
1	EA	CLASSROOM LOCK	ND70D (MATCH EXISTING CORE TYPE)	626	SCH
1	EA	PERMANENT CORE	MATCH EXISTING KEYWAY	626	SAR
1	EA	SURFACE CLOSER	4050 SCUSH X MTG BRKT, SPCR & PLATE AS REQ	689	LCN
1	EA	PROTECTION PLATE	8400 10" X 2" LDW B-CS	630	IVE
1	EA	RAIN DRIP	142A DW + 4" (OMIT AT COVERED SPACES)	AA	ZER
1	EA	GASKETING	328AA H & J	AA	ZER
1	EA	DOOR SWEEP	39A LENGTH AS REQ	A	ZER
1	EA	THRESHOLD	655A LENGTH AS REQ	A	ZER

Hardware Group No. 505A
PROVIDE EACH SGL DOOR(S) WITH THE FOLLOWING:

QTY		DESCRIPTION	CATALOG NUMBER	FINISH	MFR
1	EA	CONT. HINGE	112XY HEIGHT AS REQ	628	IVE
1	EA	CLASSROOM LOCK	8745.214.LxL.29L	US26D	ACC
1	EA	PERMANENT CORE	MATCH EXISTING KEYWAY	626	SAR
1	EA	SURFACE CLOSER	4050 SCUSH X MTG BRKT, SPCR & PLATE AS REQ	689	LCN
1	SET	SEAL	PERIMETER SEAL BY FRAME MANUFACTURER		
1	EA	DOOR SWEEP	39A LENGTH AS REQ	A	ZER
1	EA	THRESHOLD	655A LENGTH AS REQ	A	ZER

Hardware Group No. 505I
PROVIDE EACH SGL DOOR(S) WITH THE FOLLOWING:

QTY		DESCRIPTION	CATALOG NUMBER	FINISH	MFR
3	EA	HINGE	5BB1 4.5 X 4.5	652	IVE
1	EA	CLASSROOM LOCK	ND70D (MATCH EXISTING CORE TYPE)	626	SCH
1	EA	PERMANENT CORE	MATCH EXISTING KEYWAY	626	SAR
1	EA	SURFACE CLOSER	4050 RW/PA X MTG BRKT, SPCR & PLATE AS REQ	689	LCN
1	EA	PROTECTION PLATE	8400 10" X 2" LDW B-CS	630	IVE
1	EA	WALL STOP	WS406/407CCV	630	IVE
1	EA	GASKETING	328AA H & J	AA	ZER
1	EA	DOOR SWEEP	8192AA LENGTH AS REQ	AA	ZER
1	EA	THRESHOLD	655A LENGTH AS REQ	A	ZER

Hardware Group No. 595HI
PROVIDE EACH SGL DOOR(S) WITH THE FOLLOWING:

QTY		DESCRIPTION	CATALOG NUMBER	FINISH	MFR
3	EA	HINGE	5BB1HW 4.5 X 4.5	630	IVE
1	EA	CLASSROOM LOCK	ND70D (MATCH EXISTING CORE TYPE)	626	SCH
1	EA	PERMANENT CORE	MATCH EXISTING KEYWAY	626	SAR
1	EA	OH STOP & HOLDER	100H	630	GLY
1	EA	SURFACE CLOSER	4050 RW/PA X MTG BRKT, SPCR & PLATE AS REQ	689	LCN
1	EA	PROTECTION PLATE	8400 10" X 2" LDW B-CS	630	IVE
1	EA	MEETING STILE	328AA (2 PCS - 1 SET) HEIGHT AS REQ	AA	ZER
1	EA	GASKETING	328AA H & J	AA	ZER
1	EA	DOOR SWEEP	8192AA LENGTH AS REQ	AA	ZER
1	EA	THRESHOLD	655A LENGTH AS REQ	A	ZER

Hardware Group No. 711AV
PROVIDE EACH SGL DOOR(S) WITH THE FOLLOWING:

QTY		DESCRIPTION	CATALOG NUMBER	FINISH	MFR
1	EA	CONT. HINGE	112XY HEIGHT AS REQ	628	IVE
1	EA	PANIC HARDWARE	CD-33A-NL-OP LENGTH AS REQ	626	VON
1	EA	MORTISE CYLINDER	MATCH EXISTING CORE TYPE X CONSTRUCTION CORE	626	SAR
1	EA	RIM CYLINDER	MATCH EXISTING CORE TYPE X CONSTRUCTION CORE	626	SAR
2	EA	PERMANENT CORE	MATCH EXISTING KEYWAY	626	SAR
1	EA	90 DEG OFFSET PULL	8190-O 10"	630	IVE
1	EA	SURFACE CLOSER	4050 RW/PA X MTG BRKT, SPCR & PLATE AS REQ	689	LCN
1	EA	WALL STOP	WS406/407CCV	630	IVE
1	SET	SEAL	PERIMETER SEAL BY FRAME MANUFACTURER		

Hardware Group No. 711C
PROVIDE EACH SGL DOOR(S) WITH THE FOLLOWING:

QTY		DESCRIPTION	CATALOG NUMBER	FINISH	MFR
3	EA	HINGE	5BB1HW 4.5 X 4.5	652	IVE
1	EA	PANIC HARDWARE	LD-99-NL LENGTH AS REQ	626	VON
1	EA	RIM CYLINDER	MATCH EXISTING CORE TYPE X CONSTRUCTION CORE	626	SAR
1	EA	PERMANENT CORE	MATCH EXISTING KEYWAY	626	SAR
1	EA	SURFACE CLOSER	4050 SCUSH X MTG BRKT, SPCR & PLATE AS REQ	689	LCN
1	EA	PROTECTION PLATE	8400 10" X 2" LDW B-CS	630	IVE
3	EA	SILENCER	SR64	GRY	IVE

Hardware Group No. 735
PROVIDE EACH SGL DOOR(S) WITH THE FOLLOWING:

QTY		DESCRIPTION	CATALOG NUMBER	FINISH	MFR
3	EA	HINGE	5BB1HW 4.5 X 4.5	630	IVE
1	EA	PANIC HARDWARE	99-L-BE-06 LENGTH AS REQ	626	VON
1	EA	SURFACE CLOSER	4050 RW/PA X MTG BRKT, SPCR & PLATE AS REQ	689	LCN
1	EA	PROTECTION PLATE	8400 10" X 2" LDW B-CS	630	IVE
1	EA	WALL STOP	WS406/407CCV	630	IVE
1	EA	RAIN DRIP	142A DW + 4" (OMIT AT COVERED SPACES)	AA	ZER
1	EA	GASKETING	328AA H & J	AA	ZER
1	EA	DOOR SWEEP	39A LENGTH AS REQ	A	ZER
1	EA	THRESHOLD	655A LENGTH AS REQ	A	ZER

Hardware Group No. C205
PROVIDE EACH SGL DOOR(S) WITH THE FOLLOWING:

QTY		DESCRIPTION	CATALOG NUMBER	FINISH	MFR
3	EA	HINGE	5BB1HW 4.5 X 4.5 NRP	630	IVE
1	EA	POWER TRANSFER	EPT10 CON	689	VON
1	EA	EU STOREROOM LOCK	ND80DEU (MATCH EXISTING CORE TYPE) RHO RX CON	626	SCH
1	EA	PERMANENT CORE	MATCH EXISTING KEYWAY	626	SAR
1	EA	SURFACE CLOSER	4050 SCUSH X MTG BRKT, SPCR & PLATE AS REQ	689	LCN
1	EA	PROTECTION PLATE	8400 10" X 2" LDW B-CS	630	IVE
1	EA	RAIN DRIP	142A DW + 4" (OMIT AT COVERED SPACES)	AA	ZER
1	EA	GASKETING	328AA H & J	AA	ZER
1	EA	DOOR SWEEP	39A LENGTH AS REQ	A	ZER
1	EA	THRESHOLD	655A LENGTH AS REQ	A	ZER
1	EA	HARNESS (IN DOOR)	ALLEGION CONNECT TYPE & LENGTH AS REQ		SCH
1	EA	HARNESS (TO POWER SUPPLY)	CON-6W (CONNECTION LEADS)		SCH
1	EA	CREDENTIAL READER	CREDENTIAL READER BY ANOTHER SECTION		
1	EA	DOOR CONTACT	679-05 TYPE AS REQ	WHT	SCE
1	EA	POWER SUPPLY	PS902 120/240 VAC (COORDINATE POWER SUPPLIES WITH SECURITY PRIOR TO SUBMITTAL. OMIT WHERE PROVIDED BY SECURITY)	LGR	SCE

OPERATIONAL DESCRIPTION:
-DOOR NORMALLY CLOSED AND LOCKED.
-ENTRANCE BY VALID CARD READ OR MANUAL KEY OVERRIDE.
-FREE EGRESS AT ALL TIME BY PUSH PADS.
-UPON POWER FAILURE, DOOR TO REMAIN LOCKED.

Hardware Group No. C715
PROVIDE EACH SGL DOOR(S) WITH THE FOLLOWING:

QTY		DESCRIPTION	CATALOG NUMBER	FINISH	MFR
3	EA	HINGE	5BB1HW 4.5 X 4.5 NRP	630	IVE
1	EA	POWER TRANSFER	EPT10 CON	689	VON
1	EA	ELEC PANIC HARDWARE	RX-QEL-99-NL-CON LENGTH AS REQ	626	VON
1	EA	RIM CYLINDER	MATCH EXISTING CORE TYPE X CONSTRUCTION CORE	626	SAR
1	EA	PERMANENT CORE	MATCH EXISTING KEYWAY	626	SAR
1	EA	SURFACE CLOSER	4050 SCUSH X MTG BRKT, SPCR & PLATE AS REQ	689	LCN
1	EA	RAIN DRIP	142A DW + 4" (OMIT AT COVERED SPACES)	AA	ZER
1	SET	SEALS	328AA H & J	AL	ZER
1	EA	DOOR SWEEP	39A LENGTH AS REQ	A	ZER
1	EA	THRESHOLD	655A LENGTH AS REQ	A	ZER
1	EA	HARNESS (IN DOOR)	ALLEGION CONNECT TYPE & LENGTH AS REQ		SCH
1	EA	HARNESS (TO POWER SUPPLY)	CON-6W (CONNECTION LEADS)		SCH
1	EA	CREDENTIAL READER	CREDENTIAL READER BY ANOTHER SECTION		
1	EA	DOOR CONTACT	679-05 TYPE AS REQ	WHT	SCE
1	EA	POWER SUPPLY	PS902 120/240 VAC (COORDINATE POWER SUPPLIES WITH SECURITY PRIOR TO SUBMITTAL. OMIT WHERE PROVIDED BY SECURITY)	LGR	SCE

OPERATIONAL DESCRIPTION:
-DOOR NORMALLY CLOSED AND LOCKED.
-ENTRANCE BY VALID CARD READ OR MANUAL KEY OVERRIDE.
-FREE EGRESS AT ALL TIME BY PUSH PADS.
-UPON POWER FAILURE, DOOR TO REMAIN LOCKED.

Hardware Group No. C715A
PROVIDE EACH SGL DOOR(S) WITH THE FOLLOWING:

QTY		DESCRIPTION	CATALOG NUMBER	FINISH	MFR
1	EA	CONT. HINGE	112XY EPT HEIGHT AS REQ	628	IVE
1	EA	POWER TRANSFER	EPT10 CON	689	VON
1	EA	ELEC PANIC HARDWARE	RX-QEL-33A-NL-OP-CON LENGTH AS REQ	626	VON
1	EA	RIM CYLINDER	MATCH EXISTING CORE TYPE X CONSTRUCTION CORE	626	SAR
1	EA	PERMANENT CORE	MATCH EXISTING KEYWAY	626	SAR
1	EA	90 DEG OFFSET PULL	8190-O 10"	630	IVE
1	EA	SURFACE CLOSER	4050 SCUSH X MTG BRKT, SPCR & PLATE AS REQ	689	LCN
1	SET	SEAL	PERIMETER SEAL BY FRAME MANUFACTURER		
1	EA	DOOR SWEEP	39A LENGTH AS REQ	A	ZER
1	EA	THRESHOLD	655A LENGTH AS REQ	A	ZER
1	EA	HARNESS (IN DOOR)	ALLEGION CONNECT TYPE & LENGTH AS REQ		SCH
1	EA	HARNESS (TO POWER SUPPLY)	CON-6W (CONNECTION LEADS)		SCH
1	EA	CREDENTIAL READER	CREDENTIAL READER BY ANOTHER SECTION		
1	EA	DOOR CONTACT	679-05 TYPE AS REQ	WHT	SCE
1	EA	POWER SUPPLY	PS902 120/240 VAC (COORDINATE POWER SUPPLIES WITH SECURITY PRIOR TO SUBMITTAL. OMIT WHERE PROVIDED BY SECURITY)	LGR	SCE

OPERATIONAL DESCRIPTION:
-DOOR NORMALLY CLOSED AND LOCKED.
-ENTRANCE BY VALID CARD READ OR MANUAL KEY OVERRIDE.
-FREE EGRESS AT ALL TIME BY PUSH PADS.
-UPON POWER FAILURE, DOOR TO REMAIN LOCKED.

Hardware Group No. D205
PROVIDE EACH SGL DOOR(S) WITH THE FOLLOWING:

QTY		DESCRIPTION	CATALOG NUMBER	FINISH	MFR
3	EA	HINGE	5BB1HW 4.5 X 4.5 NRP	630	IVE
1	EA	STOREROOM LOCK	ND80D RHO (MATCH EXISTING CORE TYPE)	626	SCH
1	EA	PERMANENT CORE	MATCH EXISTING KEYWAY	626	SAR
1	EA	SURFACE CLOSER	4050 SCUSH X MTG BRKT, SPCR & PLATE AS REQ	689	LCN
1	EA	PROTECTION PLATE	8400 10" X 2" LDW B-CS	630	IVE
1	EA	RAIN DRIP	142A DW + 4" (OMIT AT COVERED SPACES)	AA	ZER
1	EA	GASKETING	328AA H & J	AA	ZER
1	EA	DOOR SWEEP	39A LENGTH AS REQ	A	ZER
1	EA	THRESHOLD	655A LENGTH AS REQ	A	ZER
1	EA	DOOR CONTACT	679-05 TYPE AS REQ	WHT	SCE

Hardware Group No. D214
PROVIDE EACH PR DOOR(S) WITH THE FOLLOWING:

QTY		DESCRIPTION	CATALOG NUMBER	FINISH	MFR
6	EA	HINGE	5BB1HW 4.5 X 4.5 NRP	630	IVE
2	EA	MANUAL FLUSH BOLT	FB458-12"	626	IVE
1	EA	DUST PROOF STRIKE	DP2	626	IVE
1	EA	STOREROOM LOCK	ND80D RHO (MATCH EXISTING CORE TYPE)	626	SCH
1	EA	PERMANENT CORE	MATCH EXISTING KEYWAY	626	SAR
1	EA	OH STOP	900S SERIES X SIZE & MOUNTING AS REQ	630	GLY
1	EA	SURFACE CLOSER	4050 SCUSH X MTG BRKT, SPCR & PLATE AS REQ	689	LCN
2	EA	PROTECTION PLATE	8400 10" X 1" LDW B-CS	630	IVE
1	EA	RAIN DRIP	142A DW + 4" (OMIT AT COVERED SPACES)	AA	ZER
2	EA	MEETING STILE	328AA (2 PCS - 1 SET) HEIGHT AS REQ	AA	ZER
1	EA	GASKETING	328AA H & J	AA	ZER
1	EA	GASKETING	488SBK PSA HEIGHT AS REQ (MOUNT ON ASTRAGAL)	BK	ZER
2	EA	DOOR SWEEP	39A LENGTH AS REQ	A	ZER
1	EA	THRESHOLD	655A LENGTH AS REQ	A	ZER
2	EA	DOOR CONTACT	679-05 TYPE AS REQ	WHT	SCE

Hardware Group No. D505A
PROVIDE EACH SGL DOOR(S) WITH THE FOLLOWING:

QTY		DESCRIPTION	CATALOG NUMBER	FINISH	MFR
1	EA	CONT. HINGE	112XY HEIGHT AS REQ	628	IVE
1	EA	CLASSROOM LOCK	8745.214.LxL.29L	US26D	ACC
1	EA	PERMANENT CORE	MATCH EXISTING KEYWAY	626	SAR
1	EA	SURFACE CLOSER	4050 SCUSH X MTG BRKT, SPCR & PLATE AS REQ	689	LCN
1	SET	SEAL	PERIMETER SEAL BY FRAME MANUFACTURER		
1	EA	DOOR SWEEP	39A LENGTH AS REQ	A	ZER
1	EA	THRESHOLD	655A LENGTH AS REQ	A	ZER
1	EA	DOOR CONTACT	679-05 TYPE AS REQ	WHT	SCE

Hardware Group No. D705A
PROVIDE EACH SGL DOOR(S) WITH THE FOLLOWING:

QTY		DESCRIPTION	CATALOG NUMBER	FINISH	MFR
1	EA	CONT. HINGE	112XY HEIGHT AS REQ	628	IVE
1	EA	PANIC HARDWARE	CD-33A-L-06 LENGTH AS REQ	626	VON
1	EA	MORTISE CYLINDER	MATCH EXISTING CORE TYPE X CONSTRUCTION CORE	626	SAR
1	EA	RIM CYLINDER	MATCH EXISTING CORE TYPE X CONSTRUCTION CORE	626	SAR
2	EA	PERMANENT CORE	MATCH EXISTING KEYWAY	626	SAR
1	EA	SURFACE CLOSER	4050 SCUSH X MTG BRKT, SPCR & PLATE AS REQ	689	LCN
1	SET	SEAL	PERIMETER SEAL BY FRAME MANUFACTURER		
1	EA	DOOR SWEEP	39A LENGTH AS REQ	A	ZER
1	EA	THRESHOLD	655A LENGTH AS REQ	A	ZER
1	EA	DOOR CONTACT	679-05 TYPE AS REQ	WHT	SCE

Hardware Group No. D715
PROVIDE EACH SGL DOOR(S) WITH THE FOLLOWING:

QTY		DESCRIPTION	CATALOG NUMBER	FINISH	MFR
3	EA	HINGE	5BB1HW 4.5 X 4.5 NRP	630	IVE
1	EA	PANIC HARDWARE	99-NL LENGTH AS REQ	626	VON
1	EA	RIM CYLINDER	MATCH EXISTING CORE TYPE X CONSTRUCTION CORE	626	SAR
1	EA	PERMANENT CORE	MATCH EXISTING KEYWAY	626	SAR
1	EA	SURFACE CLOSER	4050 SCUSH X MTG BRKT, SPCR & PLATE AS REQ	689	LCN
1	EA	PROTECTION PLATE	8400 10" X 2" LDW B-CS	630	IVE
1	EA	RAIN DRIP	142A DW + 4" (OMIT AT COVERED SPACES)	AA	ZER
1	EA	GASKETING	328AA H & J	AA	ZER
1	EA	DOOR SWEEP	39A LENGTH AS REQ	A	ZER
1	EA	THRESHOLD	655A LENGTH AS REQ	A	ZER
1	EA	DOOR CONTACT	679-05 TYPE AS REQ	WHT	SCE

END OF SECTION

Door#	HwSet#
5-101 A	D705A
5-101 B	205
5-101 C	711C
5-102 A	301
5-103 A	201
5-104 A	505I
5-105 A	500S1
5-106 A	D214
5-107 A	201
5-109 A	001
5-110 A	103
5-111 A	C715A
5-112 A	407
5-113 A	C205
5-113 B	405
5-114 A	002
5-114 B	002
5-114 C	002
5-114 D	D715
5-114 E	D715
5-115 A	407
5-115 B	001
5-201 A	303G
5-201 B	303
5-203 A	303GS
5-204 A	303G
5-205 A	303GS
5-206 A	301
5-207 A	301
5-208 A	301
5-209 A	303GS
5-210 A	303G
5-211 A	303GS
5-213 A	401
5-214 A	201
5-215 A	403
5-217 A	405
5-217 B	405
5-219 A	503
5-220 A	503
5-221 A	503
5-223 A	505A
5-301 B	595HI
11-101 A	711AV
11-101 B	C715A
11-102 A	103
11-103 A	C205
11-103 B	405
11-104 A	503
11-105 A	503

Door#	HwSet#
11-106 A	503
11-107 A	301
11-108 A	D505A
11-112 A	201
11-113 A	C205
11-113 B	405
11-114 A	303G
11-114 B	303
11-116 A	303GS
11-116 B	303
11-117 A	303G
11-118 A	303GS
11-119 A	303GS
11-120 A	303GS
11-121 A	303GS
11-122 A	303G
11-123 A	401
11-124 A	201
11-125 A	301
11-126 A	301
11-127 A	307
11-128 A	C715A
11-128 B	403
11-128 C	403
11-129 A	001
11-129 B	001
11-129 C	001
11-129 D	001
11-129 E	002
11-129 F	002
11-129 G	002
11-129 H	002
11-129 J	D715
11-130 A	001
11-131 A	D205
11-132 A	301
11-133 A	401
11-135 A	501
11-136 A	735
11-136 B	C715
11-137 A	505I
11-137 B	001
11-140 A	001
11-140 B	505
11-140 C	001
11-141 A	205
11-141 B	205

SECTION 12 49 20 – MANUAL OPERATED ROLLER SHADE

Part I – GENERAL

A. SUMMARY

1. Section Includes
   a. Roller Blackout Window Shade

2. Related Work includes the following
   a. Section 06100 Rough Carpentry
   b. Section 08800 Glazed Systems
   c. Section 079200 "Joint Sealants" for sealing the perimeters of installation accessories for light-blocking shades with a sealant.

B. REFERENCES

1. National Fire Protection Association (NFPA) 701
2. Department of Transportation Motor Vehicle Safety Standard 302 Flammability of Interior Materials
3. California Administrative Code Title 19
4. Federal Standard 191 Method 5903 (used by Port Authority of New York and New Jersey for drapery, curtain, and upholstery material)
5. Boston Fire Department Test BFD IX-1
6. New York State Uniform Fire Prevention and Building Code

C. SUBMITTALS

1. Subject under provisions of Section 01330 – Submittal Procedures
2. Product Data: Manufacturer's data sheets shall be submitted for each product specified, including:
   a. Preparation instructions and recommendations
   b. Finishes, material descriptions, dimensions of individual components
   c. Construction and installation instructions
   d. Manufacturers recommendations for maintenance and cleaning
3. Drawings and Diagrams: Product details, installation details, working and assembly drawings shall be supplied as requested
4. Sample: Responsible contracting officer or agent shall supply one sample shade of each type specified in this contract for approval. Supplied units shall be furnished complete with all required components, mounting and associated hardware, instructions and warranty.

D. QUALITY ASSURANCE

1. Supplier: Manufacturer, subsidiary, or licensed agent shall be approved to supply the products specified, and to honor any claims against product presented in accordance with warranty.
2. Installer: Installer or agent shall be qualified to installed specified products by prior experience, demonstrated performance and acceptance of requirements of manufacturer, subsidiary, or licensed agent. Installer shall be responsible for an acceptable installation.

3. Uniformity: Provide product of only one manufacturer for entire project.
4. Mock up: Provide one (1) mock-up shade for each roller shade type/assembly specified.

E. DELIVERY, STORAGE, AND HANDLING

1. Product shall be delivered to site in manufacturer's original packaging.
2. Product shall be handled and stored to prevent damage to materials, finishes, and operating mechanisms.

F. JOB CONDITIONS

1. Prior to shade installation, building shall be enclosed.
2. Interior temperature shall be maintained between 60 degrees Fahrenheit and 90 degrees Fahrenheit during and after installation; relative humidity shall not exceed 80%. Wet work shall be complete and dry.

G. WARRANTY

1. Provide a limited manufacturer's warranty from date of Substantial Completion covering the following periods.
   a. Lifetime Limited Warranty on all hardware components, fabrics warrantied for 5 years by Hunter Douglas, and most fabrics warrantied for 10 years by the fabric manufacturer. Specific and custom product warranties available from manufacturer or its authorized agent.

Part II – PRODUCTS

A. ACCEPTABLE MANUFACTURER

1. Hunter Douglas Architectural Window Coverings – Justin Pratt, 13915 Danielson Street, Suite 100, Poway, CA 92064; Phone 214-499-5513; Website www.hunterdouglasarchitectural.com/windowcoverings.
2. Other Manufacturers providing equivalent product meeting requirements of this specification, as approved by architect prior to installation.

B. MANUAL ROLLER SHADE

1. FABRICS: Inherently anti-static, flame retardant, fade and stain resistant, light filtering, room darkening, and blackout fabrics providing 0% to 20% openness, 5 oz/sq. yd to 20.70 oz/sq. yd, containing fiberglass, PVC, polyester, acrylic, vinyl laminates, cotton, and vinyl coatings (based upon fabric choice). *Finish selected by architect from manufacturer's available Standard colors.*
   a. Horizontal stabilizing battens are not required, nor will they be accepted.

2. CONTROL SYSTEMS:
   a. CLUTCH OPERATED: Chain-driven operator capable of lifting up to 20 pounds of weight with a maximum allowable pull force of 10 pounds. Utilization of adjustment-free continuous qualified T304 stainless ball chain with 110 lbs. breaking strength for precise control, smooth operation, and ensures a uniform look. Components must be maintenance-free from adjustments or lubrication for trouble-free lifetime operation.
      1. 90 pound breaking strength chains will not be accepted.

2. Chain anchor device to be compliant with WCMA safety standard A100.1.1-2010 and must prevent the clutch system from moving the roller shade through lowering and raising if not properly installed as specified in ANSI Standard Section 6.5.2.

b. ROLLER TUBE: Circular-shaped aluminum tube extruded from alloy and temper 6063 T-6. Extruded tube to have a .063" wall thickness (2.5" outside diameter to have a 0.79" wall thickness). Heavily reinforced with minimum of six internal ribs and flutes providing additional tensile strength and allows for secure placement of clutch and end plug.

c. SPRING-LOADED IDLE END: Reinforced idler assembly containing spring loaded end plug with positive locking wheel allowing for up to 7/8" adjustment and provides for a secure installation and removal of shade. Locking tube bearing plug contains minimum 6 ribs and flutes and inserted a minimum of 2 3/8" into roller tube on heavy duty systems.

d. BOTTOM BAR: Industry standard sealed hembar with weight sewn into pocket providing for tracking adjustments and uniform look of the hanging fabric panel. RB500 Bottom Bar with wool pile

e. MOUNTING HARDWARE: Manufacturer's standard or heavy duty bracket constructed of hardened 1/8" thick steel to support full weight of shade with bracket and screw hole covers to provide uniform look. Locking mechanism on bracket adapter provides for a secure installation and removal of the shade.
   1. Cradle-seated hardware without a locking mechanism will not be accepted.

f. INTEGRATED LEVELING DEVICE: Built into the idle-end bracket (or intermediate bracket of a coupled shade) allowing for the vertical height adjustment of +/- one-half inch direction up or down, allowing the easy leveling of a fabric panel on its mounting surface. This assists to keep the fabric rolling square to the tube, minimizing the chance of the fabric rolling into its hardware causing creases and damage to the ends of the fabric.
   1. Adjusting fabric skewing through means of tape, paper, or cardboard tucked up inside the fabric at the tube is not acceptable.

g. FASCIA: L-shaped removable aluminum extrusion valance that attaches to brackets and conceals roller shade. Fascia at the bottom enclosure must allow a maximum of 1" gap to allow fabric to come through. Exposure underneath greater than 1" is not to be accepted.

h. BLOCKOUT SYSTEM: Extruded aluminum side channel with concealed mounting brackets. Bottom bar with Nylon wool pile to prevent light leakage.

i. COUPLING OR BANDING: Coupling is utilized when more than one fabric tube assembly is mechanically linked with adjacent panels, allowing a single operator to move multiple panels of fabric. Banding is utilized when multiple panels of fabric are placed on the same tube.

C. FABRICATION

1. Shade measurements shall be accurate to within +/- 1/8" or as recommended in writing by manufacturer.

Part III – EXECUTION

A. Inspection
   1. Subcontractor shall be responsible for inspection on site, approval of mounting surface, installation conditions, and field measurement for this work.

2. Other interacting trades shall receive drawings of shade systems, dimensions, assembly, and installation methods from subcontractor upon request.

B. Installation
   1. Installation shall comply with manufacturer's specifications, standard and procedures as detailed on contract drawings
   2. Adequate clearance shall be provided to permit unencumbered operation of shade and hardware.
   3. Clean finish installation of dirt and finger marks. Leave work area clean and free of debris.

C. Demonstration
   1. Demonstrate operation method and instruct owner's personnel in the proper operation and maintenance of the roller shades.

END OF SECTION 12 49 20

SECTION 22 10 00 - PLUMBING PIPING

PART 1 - GENERAL

1.1 GENERAL REQUIREMENTS

A. The requirements of the General Conditions and Supplementary Conditions apply to all work herein.

B. The Basic Materials and Methods, Section 22 02 00, are included as a part of this Section as though written in full in this document.

1.2 SCOPE

A. The scope of the work shall include the furnishing and complete installation of the piping covered by this Section, with all appurtenances, ready for the Owner's use.

B. Include the following work in addition to items normally part of this Section:

1. Pipe and pipe fittings:

a. Sanitary drainage piping system.

b. Domestic water piping system.

2. Adapters, Transitions, Unions, Couplings, Flanges, Connectors

3. Valves

4. Excavation, Bedding, and Backfill

1.3 RELATED WORK

A. Section 22 05 29 – Hangers and Support for Plumbing Piping and Equipment.

B. Section 22 05 48 – Vibration and Seismic Controls for Plumbing Piping.

C. Section 22 05 53 – Identification for Plumbing Piping and Equipment.

D. Section 22 07 19 – Plumbing Piping Insulation.

E. Section 22 11 16 – Domestic Water Piping – Cross-Linked Polyethylene (PEX)

F. Section 22 11 19 – Plumbing Specialties.

G. Section 22 30 00 – Plumbing Equipment.

H. Section 22 40 00 – Plumbing Fixtures.

1.4 REFERENCES

A. ASME – Boiler and Pressure Vessel Code.

B. ASME Section IX – Welding and Brazing Qualifications.

C. ASME B1.20.1 – Pipe Threads, General Purpose.

D. ASME B16.1 – Gray Iron Pipe Flanges and Flanged Fittings: Classes 25, 125, and 250.

E. ASME B16.3 - Malleable Iron Threaded Fittings: Classes 150 and 300.

F. ASME B16.4 – Gray Iron Threaded Fittings: Classes 125 and 250.

G. ASME B16.5 – Pipe Flanges and Flanged Fittings: NPS 1/2 through NPS 24 Metric/Inch Standard.

H. ASME B16.9 – Factory-Made Wrought Buttwelding Fittings

I. ASME B16.14 – Ferrous Pipe Plugs, Bushings, and Locknuts with Pipe Threads.

J. ASME B16.22 - Wrought Copper and Copper Alloy Solder-Joint Pressure Fittings.

K. ASME B16.23 – Cast Copper Alloy Solder Joint Drainage Fittings: DWV.

L. ASME B16.51 – Copper and Copper Alloy Press-Connect Pressure Fittings.

M. ASME B31.3 – Process Piping.

N. ASME B31.9 – Building Services Piping.

O. ASTM A47 – Standard Specification for Ferritic Malleable Iron Castings.

P. ASTM A53 – Standard Specification for Pipe, Steel, Black and Hot-Dipped, Zinc Coated, Welded and Seamless.

Q. ASTM A74 – Standard Specification for Cast Iron Soil Pipe and Fittings.

R. ASTM A126 – Standard Specification for Gray Iron Castings for Valves, Flanges, and Pipe Fittings.

S. ASTM A153 – Standard Specification for Zinc Coating (Hot-Dip) on Iron and Steel Hardware.

T. ASTM A197 – Standard Specification for Cupola Malleable Iron.

U. ASTM A312 – Standard Specification for Seamless, Welded, and Heavily Cold Worked Austenitic Stainless Steel Pipes

V. ASTM A395 – Standard Specification for Ferritic Ductile Iron Pressure-Retaining Castings for Use at Elevated Temperatures.

W. ASTM A403 – Standard Specification for Wrought Austenitic Stainless Steel Piping Fittings

X. ASTM A536 – Standard Specification for Ductile Iron Castings.

Y. ASTM A582 – Standard Specification for Free-Machining Stainless Steel Bars.

Z. ASTM B32 – Standard Specification for Solder Metal.

AA. ASTM B42 – Standard Specification for Seamless Copper Pipe, Standard Sizes.

BB. ASTM B43 – Standard Specification for Seamless Red Brass Pipe, Standard Sizes.

CC. ASTM B62 – Standard Specification for Composition Bronze or Ounce Metal Castings.

DD. ASTM B75 – Standard Specification for Seamless Copper Tube.

EE. ASTM B88 – Standard Specification for Seamless Copper Water Tube.

FF. ASTM B148 – Standard Specification for Aluminum-Bronze Sand Castings.

GG. ASTM B306 – Standard Specification for Copper Drainage Tube (DWV).

HH. ASTM B584 – Standard Specification for Copper Alloy Sand Castings for General Applications.

II. ASTM B828 – Standard Practice for Making Capillary Joints by Soldering of Copper and Copper Alloy Tube and Fittings.

JJ. ASTM C33/C33M – Standard Specification for Concrete Aggregates.

KK. ASTM C94 – Standard Specification for Ready-Mix Concrete.

LL. ASTM C150 – Standard Specification for Portland Cement.

MM. ASTM C564 – Standard Specification for Rubber Gaskets for Cast Iron Soil Pipe and Fittings.

NN. ASTM C1053 – Standard Specification for Borosilicate Glass Pipe and Fittings for Drain, Waste, and Vent (DWV) Applications.

OO. ASTM C1173 – Standard Specification for Flexible Transition Couplings for Underground Piping Systems.

PP. ASTM C1277 – Standard Specification for Shielded Couplings Joining Hubless Cast Iron Soil Pipe and Fittings.

QQ. ASTM C1540 – Standard Specification for Heavy Duty Shielded Couplings Joining Hubless Cast Iron Soil Pipe and Fittings.

RR. ASTM D635 – Standard Test Method for Rate of Burning and/or Extent and Time of Burning of Plastics in a Horizontal Position.

SS. ASTM D1784 – Standard Specification for Rigid Poly (Vinyl Chloride) (PVC) Compounds and Chlorinated Poly (Vinyl Chloride) (CPVC) Compounds.

TT. ASTM D1785 – Standard Specification for Poly (Vinyl Chloride) (PVC) Plastic Pipe, Schedules 40, 80, and 120.

UU. ASTM D2241 – Standard Specification for Poly (Vinyl Chloride) (PVC) Pressure-Rated Pipe (SDR Series).

VV. ASTM D2321 – Standard Practice for Underground Installation of Thermoplastic Pipe for Sewers and Other Gravity-Flow Applications.

WW. ASTM D2464 – Standard Specification for Threaded Poly (Vinyl Chloride) (PVC) Plastic Pipe Fittings, Schedule 80.

XX. ASTM D2466 – Standard Specification for Poly (Vinyl Chloride) (PVC) Plastic Pipe Fittings, Schedule 40.

YY. ASTM D2467 – Standard Specification for Poly (Vinyl Chloride) (PVC) Plastic Pipe Fittings, Schedule 80.

ZZ. ASTM D2564 – Standard Specification for Solvent Cements for Poly (Vinyl Chloride) (PVC) Plastic Piping Systems.

AAA. ASTM D2665 – Standard Specification for Poly (Vinyl Chloride) (PVC) Plastic Drain, Waste, and Vent Pipe and Fittings.

BBB. ASTM D2672 – Standard Specification for Joints for IPS PVC Pipe Using Solvent Cement.

CCC. ASTM D2729 – Standard Specification for Poly (Vinyl Chloride) (PVC) Sewer Pipe and Fittings.

DDD. ASTM D2774 – Standard Practice for Underground Installation of Thermoplastic Pressure Piping.

EEE. ASTM D2843 – Standard Test Method for Density of Smoke from the Burning or Decomposition of Plastics.

FFF. ASTM D2846 – Standard Specification for Chlorinated Poly (Vinyl Chloride) (CPVC) Plastic Hot and Cold Water Distribution Systems.

GGG. ASTM D2855 – Standard Practice for the Two-Step (Primer and Solvent Cement) Method of Joining Poly (Vinyl Chloride) (PVC) or Chlorinated Poly (Vinyl Chloride) (CPVC) Pipe and Piping Components with Tapered Sockets.

HHH. ASTM D3034 – Standard Specification for Type PSM Poly (Vinyl Chloride) (PVC) Sewer Pipe and Fittings.

III. ASTM D3139 – Standard Specification for Joints for Plastic Pressure Pipes Using Flexible Elastomeric Seals.

JJJ. ASTM D3212 – Standard Specification for Joints for Drain and Sewer Plastic Pipes Using Flexible Elastomeric Seals.

KKK. ASTM D3311 – Standard Specification for Drain, Waste, and Vent (DWV) Plastic Fittings Patterns.

LLL. ASTM D4976 – Standard Specification for Polyethylene Plastics Molding and Extrusion Materials.

MMM. ASTM D5926 – Standard Specification for Poly (Vinyl Chloride) (PVC) Gaskets for Drain, Waste, and Vent (DWV), Sewer, Sanitary, and Storm Plumbing Systems.

NNN. ASTM D6707 – Standard Specification for Circular-Knit Geotextile for Use in Subsurface Drainage Applications.

OOO. ASTM E84 – Standard Test Method for Surface Burning Characteristics of Building Materials.

PPP. ASTM F439 – Standard Specification for Chlorinated Poly (Vinyl Chloride) (CPVC) Plastic Pipe Fittings, Schedule 80.

QQQ. ASTM F441 – Standard Specification for Chlorinated Poly (Vinyl Chloride) (CPVC) Plastic Pipe, Schedules 40 and 80.

RRR. ASTM F477 – Standard Specification for Elastomeric Seals (Gaskets) for Joining Plastic Pipe.

SSS. ASTM F493 – Standard Specification for Solvent Cements for Chlorinated Poly (Vinyl Chloride) (CPVC) Plastic Pipe and Fittings.

TTT. ASTM F656 – Standard Specification for Primers for Use in Solvent Cement Joints of Poly (Vinyl Chloride) (PVC) Plastic Pipe and Fittings.

UUU. ASTM F913 – Standard Specification for Thermoplastic Elastomeric Seals (Gaskets) for Joining Plastic Pipe.

VVV. ASTM F1336 – Standard Specification for Poly (Vinyl Chloride) (PVC) Gasketed Sewer Fittings.

WWW. ASTM F1476 – Standard Specification for Performance of Gasketed Mechanical Couplings for Use in Piping Applications.

XXX. ASTM F1548 – Standard Specification for Performance of Fittings for Use with Gasketed Mechanical Couplings Used in Piping Applications.

YYY. AWS A5.8 – Specification for Filler Metals for Brazing and Braze Welding.

ZZZ. AWS 5.31 – Specification for Fluxes for Brazing and Braze Welding.

AAAA. AWWA C105 – Standard for Polyethylene Encasement for Ductile-Iron Pipe Systems.

BBBB. AWWA C111 – Rubber-Gasket Joints for Ductile Iron Pressure Pipe and Fittings.

CCCC. AWWA C209 – Standard for Cold-Applied Tape Coatings for the Exterior of Special Sections, Connections, and Fittings for Steel Water Pipelines.

DDDD. AWWA C219 – Bolted, Sleeve-Type Couplings for Plain-End Pipe.

EEEE. AWWA C509 – Resilient-Seated Gate Valves for Water Supply Service.

FFFF. AWWA C515 – Reduced-Wall, Resilient-Seated Gate Valves for Water Supply Services.

GGGG. AWWA C651 – Disinfecting Water Mains.

HHHH. CISPI 301 – Standard Specification for Hubless Cast Iron Soil Pipe and Fittings for Sanitary and Storm Drain, Waste, and Vent Piping Applications.

IIII. CISPI 310 – Specification for Coupling for Use in Connection with Hubless Cast Iron Soil Pipe and Fittings for Sanitary and Storm Drain, Waste, and Vent Piping Applications.

JJJJ. ASSE 1003 Performance Requirements for Water Pressure Reducing Valves for Domestic Water Distribution Systems.

KKKK. ASSE 1079 – Performance Requirements for Dielectric Pipe Unions.

LLLL. UL 94 Standard for Tests for Flammability of Plastic Materials for Parts in Devices and Appliances.

MMMM. UL 1285 Standard for Safety Pipe and Couplings, PVC and PVCO for Underground Fire Service.

NNNN. NSF/ANSI 61 – Drinking Water System Components – Health Effects.

OOOO. NSF/ANSI 372 – Drinking Water System Components – Lead Content.

PPPP. Federal Specifications and Standards DD-G-541B – Glass (Laboratory).

1.5 QUALITY ASSURANCE

A. Manufacturer: For each product specified, provide components by the same manufacturer throughout.

B. Valves: Manufacturer's name, size, and pressure rating shall be cast or marked on valve body or handle.

C. Piping shall be labeled along its entire length indicating size, class, material specification, manufacturer's name and **country of origin**.

D. Foreign pipe, fittings or valves are unacceptable.

E. All cast iron soil pipe and fittings shall be marked with the collective trademark of the Cast Iron Soil Pipe Institute (CISPI) and shall be listed by NSF International.

F. Welding Materials and Procedures: Conform to ASME Code and applicable state labor regulations.

G. Welders Certification: In accordance with ASME Section IX.

1.6 SUBMITTALS

A. Submit under provisions of Division One.

B. Submit product data under provisions of Division One.

C. Include pipe materials, pipe fittings, valves, and accessories. Provide manufacturer's catalog information, product certifications, and **country of origin**. Indicate valve data and ratings.

1.7 PROJECT RECORD DOCUMENTS

A. Submit under provisions of Division One.

B. Record actual locations of valves.

1.8 OPERATION AND MAINTENANCE DATA

A. Submit under provisions of Division One.

B. Maintenance Data: Include installation instructions, spare parts lists, exploded assembly views.

1.9 QUALIFICATIONS

A. Manufacturer: Company specializing in manufacturing the Products specified in this section with a minimum of 5 years documented experience and must be a domestic manufacturer.

B. Installer: Company specializing in performing the work of this section with a minimum of 5 years documented experience.

1.10 DELIVERY, STORAGE, AND HANDLING

A. DELIVERY: Deliver clearly labeled piping and valves to; and store, protect and handle products on site in accordance with the provisions of Division One.

B. TIMING AND COORDINATION: Arrange for delivery of materials to allow for minimum storage time at the project site. Coordinate with the scheduled time of installation.

C. ACCEPTANCE: Accept product on site in original factory packaging. Receive valves on site in shipping containers with labeling in place. Inspect for damage. Damaged valves shall not be acceptable.

D. STORAGE: Store materials in a clean, dry location, protected from weather and damage.

E. Provide temporary protective coating on cast iron and steel valves.

F. Provide temporary end caps and closures on piping and fittings. Maintain in place until installation.

G. Protect installed piping systems from entry of foreign materials by providing temporary covers, as completing sections of the work, and isolating parts of completed systems. Tape will not be allowed as an acceptable end cover.

1.11 EXTRA MATERIALS

A. Furnish under provisions of Division One.

1.12 REGULATORY REQUIREMENTS

A. Perform work in accordance with plumbing and building codes having jurisdiction.

B. **No PVC pipe or fittings, or similar un-rated material, will be allowed in any areas where pipe is to penetrate a fire rated assembly or is to be installed in a return air plenum unless the entire length of all such piping is encased within a minimum two (2) hour fire rated enclosure**.

C. Provide a water pressure regulating valve assembly at the service entry where incoming water supply pressure is greater than 70 psi.

PART 2 - PRODUCTS

2.1 SANITARY SOIL, WASTE AND VENT PIPING, BURIED WITHIN 5 FEET OF BUILDING, BELOW GRADE

A. Cast Iron Pipe: ASTM A74 service weight.

1. Fittings: Cast iron, ASTM A74 drainage pattern.

2. Joints: Hub and spigot, ASTM C564 neoprene, compression type gaskets or lead and oakum.
1. Acceptable manufacturers (all pipe and fittings shall be from a single manufacturer):
   a. Tyler Pipe
   b. Charlotte Pipe
   c. AB&I Foundry
2. Provide ASTM D4976 polyethylene protective wrap in tubular or sheet form, minimum 8 mil nominal thickness, in accordance with manufacturer's installation guidelines, for all piping.

B. PVC Pipe: ASTM D1785/D2665 schedule 40 solid wall; installed per ASTM D2321.

1. Fittings: PVC, ASTM D3311/D2665 drainage pattern, with bell and spigot ends. Furnished by the same manufacturer as pipe or approved equal.
2. Joints: solvent weld with ASTM D2564 solvent cement, clear, medium bodied, for sizes 3" and smaller and gray, heavy bodied, for sizes 4" and larger. Mating surfaces shall be prepared with ASTM F656 purple primer immediately prior to cement application.
3. Acceptable except for kitchen waste and vent systems including piping associated with the grease trap, which shall be as specified below.

2.2 GREASE WASTE AND VENT PIPING, BURIED WITHIN BUILDING AND BELOW GRADE, SERVING KITCHEN AREA AND INTO GREASE TRAP

A. Cast Iron Pipe: ASTM A74 service weight.

1. Fittings: Cast iron, ASTM A74 drainage pattern.
2. Joints: Hub and spigot, ASTM C564 neoprene, compression type gaskets or lead and oakum.
3. Acceptable manufacturers (all pipe and fittings shall be from a single manufacturer):
   a. Tyler Pipe
   b. Charlotte Pipe
   c. AB&I Foundry

4. Provide ASTM D4976 polyethylene protective wrap in tubular or sheet form, minimum 8 mil nominal thickness, in accordance with manufacturer's installation guidelines, for all piping.

2.3 SANITARY SOIL, WASTE AND VENT PIPING, WITHIN BUILDING, ABOVE GRADE

A. Cast Iron Pipe: CISPI 301 or ASTM A888, hubless.

1. Fittings: Cast iron, CISPI 301 or ASTM A888 drainage pattern.
2. Acceptable manufacturers (all pipe and fittings shall be from a single manufacturer):
   a. Tyler Pipe
   b. Charlotte Pipe
   c. AB&I Foundry

3. Joints: No hub, ASTM C564 neoprene gaskets with ASTM C1540 heavy duty wide bodied stainless steel clamp and solid shield assembly constructed of type 300 series stainless steel. Couplings shall have four clamps for pipe sizes up to and including 4" and shall have six clamps for pipe sizes larger than 4". Clamp

assemblies shall conform to FM 1680 Class 1 where required by the administrative authority. Torque all clamps per manufacturer's recommendations.

B. Copper Tubing: ASTM B306, DWV, for sizes 2" and smaller.

1. Fittings: ASME B16.23 cast copper alloy solder joint drainage fittings (DWV), or ASME B16.29, wrought copper and wrought copper alloy solder joint drainage fittings (DWV).
2. Joints between copper pipe and fittings shall be made in accordance with ASTM B828 using ASTM B32 Alloy Grade Sn 50 solder (50-50 tin-lead).
3. Joints between copper and cast iron pipe shall be made by way of copper soldered to a brass ferrule and the ferrule joined to the cast iron hub by a compression or caulked joint.

C. PVC Pipe: ASTM D1785/D2665 schedule 40 solid wall.

1. Fittings: PVC, ASTM D3311/D2665 drainage pattern, with bell and spigot ends. Furnished by the same manufacturer as pipe or approved equal.
2. Joints: solvent weld with ASTM D2564 solvent cement, installed per the requirements of ASTM D2855.

D. Brass Pipe: ASTM B43, chrome plated

1. Fittings: ASME B16.23 cast bronze, chrome plated.
2. Joints: In accordance with ASTM B828 using ASTM B32 Alloy Grade Sn 50 solder (50-50 tin-lead) or as recommended by the manufacturer.
3. Applies to exposed piping applications (such as kitchens), wherever required by the prevailing code or by the Authority Having Jurisdiction.

2.1 DOMESTIC WATER PIPE, BURIED WITHIN 5 FEET OF BUILDING EDGE, BELOW GRADE

A. Copper Tubing: ASTM B88, Type K, soft annealed. Provide for pipe sizes up to and including 2-1/2".

1. Fittings: ASTM B16.22 wrought copper pressure fittings.
2. Joints shall be as follows:
   a. **No joints shall be permitted for pipe sizes 2" and smaller. All such piping must be run continuous below slab on grade and brought up to no less than 12" above the finished floor before any joint is provided.**
   b. For sizes larger than 2", joints between copper pipe and fittings shall be brazed and shall be made in accordance with all the applicable portions of ASTM B828, manufacturer's recommendations, and AWS requirements. Brazing filler metal shall be in accordance with AWS A5.8 and any required flux shall meet AWS A5.31, Type FB3-A or FB3-C.
3. Beginning at no closer than the 5'-0" mark from the building, all piping buried or in contact with concrete shall be provided with one of the following, which shall also extend to a minimum of 6" above the finished floor:
   a. AWWA C209 cold-applied, integrated primer type, elastomeric adhesive, laminate polymeric tape coating, minimum 35 mil nominal thickness, in accordance with manufacturer's installation guidelines. Chase Construction Products Tapecoat H35 or approved equivalent.
   b. Continuous polyethylene lining, minimum 60 mil nominal thickness.

B. Ductile Iron Pipe: Minimum pressure class 150, ANSI/AWWA C151/A21.51. Provide for pipe sizes 3" and larger.

1. Fittings: Standard ductile iron, ANSI/AWWA C110/A21.10.
2. Joints: Rubber-gasketed and bolted mechanical joints, ANSI/AWWA C111/A21.11. Installation shall be in accordance with ANSI/AWWA C600 and approved pipe lubricant shall be used for optimum gasket sealing and long-term performance.
3. Note: A single fitting may be installed below slab on grade to facilitate underground pipe entry up to above floor from an immediately adjacent exterior building wall.
4. Provide continuous polyethylene encasement for all piping buried or in contact with concrete in accordance with ANSI/AWWA C105/A21.5, beginning at no closer than the 5'-0" mark from the building and to a minimum of 6" above the finished floor.

C. Stainless Steel Pre-Fabricated In-Building Riser (acceptable for sizes 2" through 10")

1. Corrosion resistant Type 304 stainless steel construction single, extended 90 degree fitting.
2. UL listed, FM approved and NFPA 24 compliant.
3. Lead free and NSF/ANSI 61 (372) certified.
4. Acceptable manufacturers:
   a. Ames Fire & Waterworks Series IBR (4" through 10") and IBR2 (2", 2-1/2", and 3")
   b. Zurn Wilkins Model WBR (4" through 10")
5. Note: For this application, the inlet joint for larger diameter (4" through 10") piping (which **shall not** be located below a building slab or foundation) can be rubber gasketed push-on type, ANSI/AWWA C111/A21.11. Installation shall be in accordance with ANSI/AWWA C600.
6. Provide continuous polyethylene encasement for all piping buried or in contact with concrete in accordance with ANSI/AWWA C105/A21.5, beginning at no closer than the 5'-0" mark from the building and to a minimum of 6" above the finished floor.

2.2 DOMESTIC WATER PIPING, WITHIN BUILDING, BELOW GRADE

A. Copper Tubing: ASTM B88, Type K, soft annealed.

1. No joints allowed below slab, run tubing continuous.
2. Provide AWWA C209 cold-applied, integrated primer type, elastomeric adhesive, laminate polymeric tape coating, minimum 35 mil nominal thickness, in accordance with manufacturer's installation guidelines, for all piping buried or in contact with concrete, to a minimum of 6" above finished floor. Chase Construction Products Tapecoat H35 or approved equivalent.
3. Applies to installations including services to island sinks and trap primer lines.

2.3 DOMESTIC WATER PIPING, WITHIN BUILDING, ABOVE GRADE

A. Copper Tubing: ASTM B88, Type L, hard drawn.

1. Fittings: ASME B16.18, cast bronze or ASTM B16.22 wrought copper alloy solder joint pressure fittings.
2. Joints between copper pipe and fittings shall be made in accordance with ASTM B828 using ASTM B32 Alloy HB lead-free solder.
3. Fittings and joints for pipe sizes 1/2" through 4" may be mechanical press-connect system joints with ASME B16.51 lead-free copper bodied fittings with integral ethylene-propylene diene monomer rubber (EPDM) sealing gaskets. All fittings, couplings, and adapters shall be the product of a single system manufacturer and only that manufacturer's approved press tools, kits, and jaws shall be used.

a. EPDM o-rings shall be pre-installed and lubricated with ANSI/NSF 61 listed lubricant.
b. All installers of copper press-connect fittings shall be trained by the fitting manufacturer's appointed representative and carry such credentials for the duration of the project.
c. The fitting manufacturer's representative shall conduct periodic inspections of the installation and shall provide written reports of such inspections to the Contractor and Engineer, including any observed deviations from the manufacturer's recommended installation practices.
d. Acceptable system manufacturers: Viega or pre-approved equal.

4. Fittings and joints for pipe sizes 2-1/2 inch and larger shall be rolled groove type for copper tubing with all tools, couplings, adapters, fittings, gaskets, and **valves** the product of a single system manufacturer.
a. Fittings shall be cast bronze using lead-free alloys per ASTM B584 or copper wrought copper constructed to ASTM B75, compliant with NSF/ANSI 61 for potable water service applications, and meet ASTM F1548.
b. Couplings shall be epoxy/enamel (rust-inhibiting) coated ductile iron housings conforming to ASTM A536.
c. Gaskets shall be EPDM for potable water, meeting ASTM F1476, and NSF 61/NSF 372 certified for potable water service from 30 degrees to 180 degrees F.
d. Acceptable system manufacturers: Victaulic, Grinnell, Anvil Gruvlok.

B. CPVC Pipe: ASTM D1784 minimum cell classification 23447 for chlorinated polyvinyl chloride compounds, NSF 61 schedule 80 system, the product of a single manufacturer per ASTM F441.

1. Fittings: ASTM F439 schedule 80 CPVC.
2. Joints: solvent cement in accordance with manufacturer's recommendations using ASTM F493 cement, in conjunction with ASTM F656 primer when recommended or when required by code.
3. Compliance: Pipe material shall be tested to UL 273/ASTM E84 and listed as having flame spread/smoke developed values not to exceed 25/50 and be approved by the local AHJ as acceptable for use in return air plenums.
4. Acceptable system manufacturers:
a. Spears Manufacturing Company EverTUFF
b. Georg Fischer Harvel, LLC
5. Where CPVC is specified for use in conjunction with copper piping, transitions to copper branch lines shall be provided as follows:
a. A schedule 80 CPVC threaded bushing shall be provided at the CPVC fitting where the branch line/transition begins.
b. A type L copper or brass threaded nipple shall be joined to the starting end of the copper branch line.
c. The metallic threaded nipple shall be completely joined to the CPVC bushing.
d. This shall apply to both vertical to horizontal and horizontal to horizontal transitions.

2.14 ADAPTERS, TRANSITIONS, UNIONS, COUPLINGS, FLANGES, CONNECTORS

A. (Non-Acid Waste) Drainage Applications:

1. Provide approved listed adapter and transition fittings appropriate to the specific pipe transition and in accordance with code requirements.

2. For dissimilar piping above ground, provide stainless steel shielded, molded elastomeric couplings and adapters meeting ASTM C564 and ASTM C1460. Applies to installations including cast iron to PVC transitions immediately adjacent to building slabs on grade.
3. For dissimilar underground piping not below building slab, provide shear resistant .012" thick 300 series stainless steel shielded, PVC gasketed flexible couplings and adapters meeting ASTM D5926 and ASTM C1173. For direct-bury applications, provide AWWA C209 cold-applied, integrated primer type, elastomeric adhesive, laminate polymeric tape coating, minimum 35 mil nominal thickness, in accordance with manufacturer's installation guidelines, to completely wrap the shield, banding, and screws. Chase Construction Products Tapecoat H35 or approved equivalent.
4. Acceptable manufacturers:
   a. Anaco-Husky/Cremco
   b. Mission Rubber Company LLC
   c. Fernco, Inc.
   d. Fernco, Inc. Strong Back RC 1000 Series (underground piping, not below building slab; or readily accessible underground piping transitions in backwater valve pits, etc.)
5. Adapters, couplings, bushings for copper DWV pipe shall be cast bronze or wrought copper, ASME B16.23/B16.29.

B. Domestic Water Applications:

1. Provide joints between various materials with approved adapter and transition fittings appropriate to the specific pipe transition and in accordance with code requirements and the manufacturer's instructions.
2. For copper tube and pipe: adapters, bushings, plugs, caps, and couplings shall be wrought copper or cast bronze; flanges (minimum class 150) and unions shall be cast bronze. Provide with solder or threaded connections as necessary and as produced to applicable ASME standards B16.15, B16.18, B16.22, B16.24, B16.50, B1.20.1. All such appurtenances shall be for use in above ground potable water systems.
3. Above slab transitions for water service entries:
   a. 100% fusion bonded epoxy coated ASTM A536 cast ductile iron construction coupling with acrylonitrile butadiene rubber (NBR) gaskets and EPDM insulating boot for water service. 5/8 inch high strength stainless steel bolts and nuts. Coupling shall meet AWWA C219. Romac Industries, Inc. IC501 or pre-approved equivalent.
   b. 100% fusion bonded 14 mil epoxy coated coupling with ASTM A536 cast ductile iron rings. Complete with acrylonitrile butadiene rubber (NBR) gaskets and type 304 stainless steel bridge, spacers, nuts, and bolts. Coupling shall meet AWWA C219, NSF 61, and NSF 372. Krausz USA Hymax Grip Coupling Restraint or pre-approved equivalent.
4. Dielectric connections:
   a. For pipe sizes 2 inch and smaller, provide lead-free dielectric unions, rated to 180 F at 250 psi and compliant to ASSE 1079.
   b. For pipe sizes larger than 2 inches, provide lead-free dielectric flanged pipe fittings, rated to 180 F at 175 psi and meeting ASME B16.1.
   c. For grooved copper joining systems, provide grooved end dielectric transition fitting from system manufacturer, with virgin polypropylene internal lining, meeting NSF 61.

C. General:

1. Unions for ferrous pipe shall be ASTM B16.39 galvanized malleable iron, threaded, minimum pressure class 150.
2. Plugs and bushings for ferrous pipe shall be ASME B16.14 galvanized malleable iron, threaded.
3. Nipples for ferrous pipe shall be schedule 40, galvanized, ASTM A53 welded steel pipe nipples, threaded, meeting ASTM A733.
4. Couplings for ferrous pipe shall be galvanized steel, threaded, manufactured in accordance with ASTM A865.
5. Flanges for ferrous pipe shall be galvanized forged steel construction, either socket weld or slip-on weld type, minimum pressure class 150, manufactured to ASME B16.5.
6. Bolts, nuts, and gaskets for flanged connections shall be appropriate to the pipe material, fluid type, temperature, and pressure. 1/16" thick pre-formed neoprene, typical.
7. Provide flexible stainless steel connectors at pumps and other such equipment, in accordance with manufacturer's recommendations. Connectors shall have corrugated hose and braided 300 series stainless steel jacketing. Carbon steel flanged or grooved ends as appropriate. NSF 372 lead-free for all potable water applications. Metraflex Company or pre-approved equivalent.

2.15 GATE VALVES (IRON)

A. ASTM A126 cast iron bodied, class 125 gate valve with bolted bonnet, non-rising ASTM B16 brass stem and packing gland, solid wedge, cast iron hand-wheel. Bronze wedge for sizes up through 6" and cast iron wedge with bronze bushing and wedge face rings for sizes 8" and larger.

B. Basis of design:

1. NIBCO T-619 (threaded) for sizes 2" through 4".
2. NIBCO F-619 (flanged) for sizes 6" and larger.

C. Acceptable alternate manufacturers:

1. Apollo
2. Milwaukee

D. Applies to only to limited installations such as services from submersible pumps and ejectors. Not to be used for domestic water systems.

2.16 GATE VALVES (DUCTILE IRON)

A. Fusion bonded epoxy coated ASTM A536 ductile iron bodied, class 125 gate valve with bolted bonnet, non-rising Type 304 stainless steel stem, resilient wedge. End connections as suited for adjacent piping. Provide with square operating nut for extended handle operation or with hand-wheel as appropriate for depth of burial and access. Certified lead-free to NSF 61/NSF 372 and AWWA C509 & C515 compliant (3" and larger).

B. Basis of design:

1. NIBCO 619 series for sizes 2" through 12".

C. Applies to outdoor, buried below grade domestic water main installations beyond 5 feet from the building edge. Not to be used inside of buildings.

2.17 BALL VALVES

A. All bronze cast construction two-piece 600 psi body, blow-out proof stem, Teflon seated, lead-free, with stainless steel trim (including ball, stem, and valve handle). Threaded connections. Certified lead-free to NSF 61/NSF 372 and suited to 180 degrees F.

B. Basis of design (bronze valves):

1. NIBCO T-585-66-LF (full port) for all sizes up through 2".
2. NIBCO T-580-66-LF (conventional port) for sizes 2-1/2" and 3".

C. Valves 4" and larger shall be split body stainless steel construction, 275 psi cold working pressure, blow-out proof stem, PTFE seated, type 316 stainless steel trimmed, class 150, full port design with manual gear operator. NIBCO F-515-S6-F-66-FS.

D. Acceptable alternate manufacturers:

1. Apollo 77 CLF-A series (full port) for all sizes up through 2".
2. Milwaukee UPBA-400S (full port) for all sizes up through 2".
3. Apollo 77 CLF-A series (full port) for size 2-1/2" and Apollo 70LF-140 series (standard port) for 3".
4. Milwaukee UPBA-100S (standard port) for sizes 2-1/2" and 3".

E. Applies to domestic water system installations.

F. Provide valves complete with extended lever handles as required to accommodate insulation and full valve operation.

G. Provide valves complete with memory stop kit where used for balancing applications.

2.18 BUTTERFLY VALVES

A. ASTM A536 ductile iron bodied, (minimum) 200 psi lug type wafer style butterfly valve with ASTM A582 Type 400 series stainless steel stem, ASTM B148 aluminum bronze disc, and EPDM rubber seat/lining. Extended neck. Certified lead-free to NSF 61/NSF 372 and suited to 180 degrees F.

B. Basis of design:

1. NIBCO LD-2000-3 (lever handle operated) for sizes 2-1/2" through 4".
2. NIBCO LD-2000-5 (manual gear operated) for sizes 6" and larger.
3. Install between standard ASME (minimum) class 125 flanges in accordance with manufacturer's recommendations.

C. Acceptable alternate manufacturers:

1. Apollo
2. Milwaukee ML233E (lever handle operated) and ML333E (manual gear operated).

D. Applies to domestic water system installations.

2.19 BUTTERFLY VALVES (GROOVED)

A. Grooved end, lead-free, copper alloy bodied, 300 psi butterfly valve with EPDM encapsulated ductile iron or aluminum bronze disc, EPDM seat/seal, stainless steel stem and trim, and extended neck. ANSI/NSF 61 certified for potable water systems. Lever

handle operated for sizes 2-1/2" through 4" and manual gear operated with handwheel for sizes 6" and larger.

B. Acceptable manufacturers:

1. Victaulic 608N (cast brass body with aluminum bronze construction disc).
2. Grinnell B680 (ASTM B584 bronze bodied).
3. Anvil Gruvlok Series 6700 CTS (ASTM B584 bronze bodied).

C. Applies only to domestic water system installations employing grooved copper joining systems, as specified elsewhere in this section. Manufacturers shall only be acceptable where their grooved systems are provided.

2.20 CHECK VALVES (BRONZE)

A. ASTM B62/ASTM B584 bronze body and disc, minimum 200 psi (cold working pressure) Y-pattern horizontal swing type check valve with removable bronze bonnet, Type 300 series stainless steel nuts and hinge pin, and PTFE disc seat. Threaded connections. Certified lead-free to NSF 61/NSF 372 and suited to 180 degrees F.

B. ASTM A126 cast iron bodied, (minimum) class 125 globe style spring loaded (silent) check valve with ASTM B584 bronze disc and seat. Flanged connections. Certified lead-free to NSF 61/NSF 372 and suited to 200 degrees F.

C. Basis of design:

1. NIBCO T-413-Y-LF (Y-pattern swing type) for sizes up through 2".
2. NIBCO F-910-B-LF (globe style spring loaded type) for sizes 2-1/2" and larger.

D. Acceptable alternate manufacturers:

1. Apollo (for sizes up through 2")

E. Applies to domestic water system installations including associated pump discharge lines. Valves shall be suited for installation in both horizontal lines and vertical lines with upward flow, in accordance with manufacturer's recommendations.

2.21 CHECK VALVES (IRON)

A. ASTM A126 cast iron bodied, (minimum) class 125 conventional horizontal swing type check valve with bronze, cast or ductile iron disc. 200 psi cold working pressure. Threaded or flanged connections.

B. Basis of design:

a. NIBCO T-918-B (threaded connections) for sizes 2" through 4".
b. NIBCO F-918-B (flanged connections) for sizes 6" and larger.

C. Acceptable alternate manufacturers:

a. Apollo (flanged in all sizes)
b. Milwaukee F-2974A (flanged in all sizes)

D. Applies only to limited installations such as services from submersible pumps and ejectors. Not to be used for domestic water systems.

2.22 PRESSURE REGULATING VALVES (PRV's)

A. ASTM B62/ASTM B584 bronze bodied direct acting, ASSE 1003 single diaphragm type pressure regulating valve with removable bronze bonnet, in-line stainless steel strainer and spring, and FDA approved EPDM seat disc and Buna-N diaphragm. Threaded connections. Certified lead-free to NSF 61/NSF 372 and suited to 180 degrees F.

B. NSF 61 epoxy coated ductile iron bodied pilot-operated globe style pressure regulating valve assembly. Complete with low-flow bypass and stainless steel, bronze, and copper trim and fittings. NSF 61 EPDM seat disc and diaphragm. Threaded or flanged connections. Suited to 180 degrees F.

C. Basis of design:

1. Apollo PRH-T-Y-LF (36HLF series) for direct acting valves, sizes up through 3".
2. Apollo A127-LF series for pilot operated valves, sizes 1-1/4" through 4".

D. Acceptable alternate manufacturers:

1. Cla-Val
2. Victaulic (pilot-operated valves)

E. PRV's shall automatically reduce inlet pressure to a steady lower downstream pressure, regardless of changing flow rate. Provide complete with inlet strainer, inlet and outlet pressure gauges, isolation valves, and unions. Provide bypass line around assembly with normally closed valve.

2.23 BALANCING VALVES

A. Self-contained, fully automatic thermally actuated balancing valve shall continuously adjust flow to maintain the desired domestic hot water temperature within the branch line, regardless of system operating pressure. Valve shall modulate between open and closed position within a 10 degrees F range. Valve body and all internal components shall be constructed of stainless steel with major components constructed of Type 303 stainless. Rated for 200 psi maximum working pressure and no less than 250 degrees F maximum working temperature. Lead-free and ANSI/NSF 61 compliant. Threaded connections.

B. Basis of design:

1. ThermOmegaTech Circuit Solver, sizes 1/2" through 2". Provide a union and ball type shutoff valve on both sides of the balancing valve.
2. ThermOmegaTech Circuit Solver with integrated union (CSU) assembly, sizes 1/2" and 3/4". Balancing valve assembly shall come complete with union body and ball type shutoff valves on both sides.

C. Applies to circulated domestic hot water system installations including multi-branch parallel piping circuits and single-loop piping circuits.

1. Provide balancing valve at end of **each** domestic hot water supply line (after last fixture served) just prior to the hot water return line, as indicated on Drawings and in accordance with manufacturer's installation recommendations.
2. Provide a pipe tee or elbow with bushing as appropriate, 3/4" threaded thermowell, and bi-metal adjustable angle 3 inch dial thermometer upstream of each balancing valve. Thermowell stem length and thermometer temperature probe length to be suited for pipe size, insulation thickness, and to ensure clearance for maintenance access and easy viewing of thermometer. Trerice bimetal/sensor, threaded-

stepped shank thermowell (style 76) of lead-free brass (PBF) material. Trerice Model B836 thermometer with 300 stainless steel case and stem, hermetically sealed, double strength glass windowed, aluminum white-faced dial, complete with external reset and 0 to 200 degrees F range. Thermowell and thermometer face to be oriented upright for readability.

PART 3 - EXECUTION

3.1 EXCAVATION, BEDDING AND BACKFILL

A. This section shall apply for the excavation, bedding, and backfill of all buried piping unless specifically noted otherwise. All work shall be coordinated with any job site subsurface drainage/dewatering and adjusted accordingly.

B. Establish elevations of buried piping outside the building to ensure the following:

1. Not less than 2 feet of cover, or not less than maximum depth of frost penetration, whichever is the greater.
2. For water lines intended for fire protection service, the depth of cover shall be:
   a. Not less than 2'-6" in those locations where frost is not a factor.
   b. Not less than 1'-0" below the frost line for the locality.
   c. Not less than 3'-0" for piping under driveways.
   d. Not less than 1'-0" below the bottom of the building foundation/footers.
   e. In full compliance with the requirements of NFPA 13 and NFPA 24.

C. Excavation:

1. Excavate trenches for underground piping to the required depths.
2. The bottom of the trench or excavation shall be cut to a uniform grade.
3. Should rock be encountered, excavate 6 inches below grade, fill with bedding material and tamp to existing density.
4. Coordinate alignment of pipe trenches to avoid obstructions. Ensure that proposed routing of pipe will not interfere with building foundation before any trenching has begun. Should conflicts occur, contact Architect/Engineer before proceeding.
5. Should any sleeving of the building foundation be required, this shall be provided as directed by the structural engineer of record AND in accordance with the prevailing code, but in no case shall the sleeve be any less than two (2) pipe sizes greater than the pipe it serves.

D. Bedding and Backfill:

1. Backfill shall not be placed until the piping has been inspected, tested and approved. Complete backfill to the surface of natural ground or to the lines and grades indicated on drawings. **Provide 6 inch stabilized sand bed with 4 inch stabilized sand cover around each pipe**. Provide select fill up to finished surface or grade, unless indicated otherwise by project geotechnical report or specified otherwise in Division 02.
2. Compacting Backfill: Place material in uniform layers of 8 inches maximum, loose measure and compact to not less than 95% of maximum soil density as determined by ASTM D-698 Standard Proctor.
3. Restoration: Compact backfill, where trenching or excavation is required in improved areas such as pavements, walks and similar areas, to a condition equal to the adjacent undisturbed earth and restore surface of the area to the condition existing prior to trenching or excavating operation.
4. A clay fill "trench plug" extending 3 feet inside the building line and 5 feet outside the building line shall be placed to completely surround utility lines passing beneath

the foundation and grade beam. The materials shall consist of on-site soils with a plasticity index (PI) between 30 and 40 percent compacted to at least 95 percent of the Standard Proctor and maximum dry density as determined by ASTM D-698.

E. Cement Stabilized Sand:

1. Materials:
   a. Cement shall be Type I Portland cement conforming to ASTM C150.
   b. Sand shall be clean, durable sand meeting grading requirements for fine aggregates of ASTM C33 and free of organic matter and deleterious substances.
   c. Water shall be potable and free of oils, acids, alkalis, organic matter, or other deleterious substances, meeting requirements of ASTM C94.
2. Mixture:
   a. Product shall consist of not less than 1.5 sacks of Portland cement per ton of dry sand.
   b. Mixture shall contain sufficient water to hydrate the cement and be thoroughly mixed in a pugmill type mixer.

F. For water lines (including In-Building Risers) intended for fire protection service, provide joint restraints by way of concrete thrust blocks in accordance with the requirements of NFPA 13 and NFPA 24.

G. Aggressive Soil Conditions: Soil shall be considered aggressive and protection of buried metallic piping shall be provided as specified if any of the following situations exist:

1. Conditions are identified as such by the project geotechnical report or project geotechnical engineer.
2. The soil environment is a landfill area, swamp, marsh, polluted river bottom, cinder bed, or has alkaline soils.
3. A score of ten or higher is tallied when applying the soil assessment tool detailed in Appendix A of AWWA C105. An excerpt of this evaluation procedure is provided below for reference but is not intended as a substitute for the complete and latest Standard:

Numerical Corrosivity Scale

Soil Parameter	Assigned Points
Resistivity (ohm-cm)	
<700	10
700 – 1,000	8
1,000 – 1,200	5
1,200 – 1,500	2
1,500 – 2,000	1
>2,000	0
pH	
0 – 2	5
2 – 4	3
4 – 6.5	0
6.5 – 7.5	0
7.5 – 8.5	0
>8.5	3

Redox Potential (mV)	
>100	0
50 – 100	3.5
0 – 50	4
<0	5
Sulfides	
Positive	3.5
Trace	2
Negative	0
Moisture	
Poor drainage continuously wet	2
Fair drainage generally moist	1
Good drainage generally dry	0

3.2 INSTALLATION

A. General requirements for piping:

1. Ream pipe and tube ends. Remove burrs. Bevel plain end ferrous pipe.
2. Remove any scale, oil and dirt, on inside and outside, before assembly.
3. Prepare piping connections to equipment with flanges or unions.
4. Confirm pipe placement, depth/elevation, and flow lines prior to any installation.

B. General requirements for valves:

1. Install valves with stems upright or horizontal, not inverted.
2. Valves shall be line-sized unless specifically noted otherwise.
3. Provide clearance for installation of insulation and access to valves and operable fittings. Valves installed beyond reasonable reach shall be provided with a chain operator.
4. Provide access doors where valves and operable fittings are not otherwise accessible. Access doors shall be of approved types set in locations pre-approved by submittal to the Architect.
5. Gate valves installed below grade shall be covered with an adjustable cast iron roadway box extended to grade. Cover shall be cast iron with 'water' cast on top of cover and shall be set flush to finished paving or 2" above finished earthen grade. Box shall be supported from undisturbed soil or concrete base and shall not introduce any stress to piping under all traffic conditions.

C. Install all materials in accordance with the manufacturer's published instructions.

D. All exposed sewer and water pipe in toilet rooms or other finished areas of the building shall be chrome plated.

E. Provide non-conducting dielectric connections wherever joining dissimilar metals.

F. Route piping in an orderly manner, parallel and perpendicular to building column grid lines, unless indicated otherwise on drawings, and maintain gradients.

G. Install piping to conserve building space and not conflict with other trades or interfere with intended use of space.

H. Group piping whenever practical at common elevations.

I. Install piping to allow for expansion and contraction without stressing pipe, joints, or connected equipment.

J. Where pipe support members are welded to structural building framing, scrape, brush clean, and apply one coat of zinc rich primer to welding.

K. Provide encasement for and support for utility meters in accordance with the requirements of utility companies.

L. Prepare pipe, fittings, supports, and accessories not pre-finished, ready for finish painting.

M. Maintain uniformity in the installation of piping materials and joining methods. Do not mix material types.

N. Where connecting new underground sanitary, storm, or vent piping to existing piping of dissimilar material, provide suitable mechanical transition fittings complete with corrosion protection for metallic elements. Chase Construction Products Tapecoat H35 or approved equivalent and a final coat of coal tar to completely cover the transition.

O. Solder joints shall be wiped clean at each joint, remove excess metal while molten and flux residue when cooled.

P. Waste nipple from wall to tapped tee shall be schedule 40 threaded galvanized steel pipe or brass or copper with threaded adapter.

Q. General requirements for cast iron piping installation:

1. Install all pipe and fittings in accordance with published recommendations from the manufacturer and the Cast Iron Soil Pipe Institute (CISPI). Specific items referenced below are not intended as a substitute for the complete and latest recommendations.
2. Install bell and spigot type pipe with bell end upstream.
3. Above ground horizontal pipe (suspended) shall:
    a. Be supported at no less than at every joint, and within 18” of the hub or coupling.
    b. Be maintained in alignment. Sagging or grade reversal shall be unacceptable.
    c. Be supported at terminal ends of all runs or branches and at each change of direction or alignment.
    d. Have all closet bends, traps, trap arms, and similar branches firmly secured.
    e. Be braced to prevent movement or joint separation.
    f. Be provided with suitable sway bracing (such as clamps, rods, and hardware) where pipe and fittings are suspended in excess of 18” by means of non-rigid hangers.
4. Above ground vertical pipe shall:
    a. Be secured at each stack base.
    b. Be secured at each floor and riser clamps shall be provided on no greater than 15’-0” intervals.
    c. Be adequately supported to keep the system (pipe and contents) in alignment.
5. Provide seismic restraints in seismically active areas, whether specifically required by the prevailing code or not.

R. All grooved system tools and components (couplings, adapters, fittings, gaskets, **valves**, and specialties) shall be the product of a single domestic system manufacturer.

S. Grooved pipe system manufacturer shall provide on-site training for contractor's field personnel by a factory trained representative in the proper use of grooving tools, application of groove, and product installation. Factory trained representative shall periodically visit the job site and inspect installation. Contractor shall remove and replace any improperly installed products at no additional cost to the owner.

3.3 APPLICATION

A. Provide union downstream of all valves at equipment or apparatus connections.

B. Provide male adapters each side of threaded valves in copper piped system. Sweat solder adapters to tube prior to make-up of threaded connections.

C. Provide approved isolation valves for shut-off and to isolate all equipment items and distinct parts of systems. Isolation valves shall be provided for both hot and cold water in locations including, but not necessarily limited to, the following:

1. At each floor for each domestic water tap branching off from a vertical riser.
2. At each domestic water branch line capped for future use.
3. At each restroom or restroom group.
4. At each hose bibb, wall hydrant, hose reel, and trap primer device (except for flush valve or tailpiece type trap primer devices).
5. At each domestic water branch line within 24" of the corresponding main.
6. At each plumbing fixture not otherwise served by a localized fixture group isolation valve.

D. Each plumbing water rough-in stub out shall be fitted with a supply stop.

E. Valves installed in insulated piping shall be fitted with extended lever operators of sufficient length to raise handle above the insulation jacket material. Where valve is used for throttling service, the valve handle shall be equipped with adjustable memory stop device.

F. Provide non-slam type check valves on discharge lines from all water pumps. Install at a minimum length of 5 times the pipe diameter from the pump and in accordance with manufacturer's installation recommendations.

3.4 ERECTION TOLERANCES

A. All gravity drainage lines in the building shall have 1/4 inch per foot fall where possible and not less than 1/8 inch per foot fall toward the main sewer. Pipe must be laid so that the slope will be uniform and continuous. Permission shall be secured from the Architect and Engineer before proceeding with any Work where existing conditions prevent the installation at the minimum grade specified.

B. All vent and branch vent pipes shall be graded and connected as to drip back by gravity to the drainage pipe it serves. A slope of 1 inch per 40 feet will suffice for this requirement, subject to the approval of the local Authority Having Jurisdiction.

C. Slope all horizontal water piping with uniform pitch of 1/8 inch per 10 feet to low points to allow for complete system drainage. For long runs, where constant pitch cannot be maintained, provide intermediate low points and rise up again from such locations. Slope

horizontal branches back to mains or risers. Provide clearly identified supplementary drain valves where hose bibbs, hydrants, or sill cocks will not suffice for this requirement.

3.5 DISINFECTION OF DOMESTIC WATER PIPING SYSTEM

A. Prior to starting work, all domestic water systems shall be complete, thoroughly flushed clean and free of all foreign matter or erection residue.

B. Ensure PH of water to be treated is between 7.4 and 7.6 by adding alkali (caustic soda or soda ash) or acid (hydrochloric).

C. On building side of the main shut off valve, provide a 3/4" connection through which chlorine can be introduced into the water piping

D. Inject disinfectant, free chlorine in liquid, powder, tablet or gas form, in sufficient quantity to obtain 50 to 80 mg/L residual free chlorine solution throughout the entire domestic water piping systems.

E. Bleed water from outlets as required to ensure complete distribution and test for disinfectant residual at a minimum 15 percent of total outlets.

F. Maintain disinfectant in system for 24 hours.

G. If final disinfectant residual tests less than 25 mg/L, repeat treatment.

H. Flush disinfectant from system until residual equal to that of incoming water or 1.0 mg/L.

I. Take samples no sooner than 24 hours after flushing, from 5 percent of outlets and from water entry, and analyze in accordance with AWWA C651.

3.6 SERVICE CONNECTIONS

A. Provide new sanitary and storm sewer services connecting to existing building services or utility lines as shown on the drawings.

B. Before commencing work, field verify invert elevations required for sewer connections, confirm inverts and ensure that these can be properly connected with slope for drainage and cover as required.

C. Provide new domestic water service connecting to existing building services or utility lines as shown on plans. Assure connections are in compliance with requirements of the jurisdiction having authority.

D. Extension of services to the building shall be fabricated from the same materials as the utility service lines or those materials specified herein.

E. Should points of connection vary from those indicated on the drawings contractor shall properly allow for this in the actual connections field fabricated.

3.7 RODDING SEWERS

A. All sanitary soil and waste lines, both in the building and out, shall be rodded out after completion of the installation.

B. This Work shall be done, as part of the contract, to make certain that all lines are clear, and any obstruction that may be discovered shall be removed immediately. Rodding shall be accomplished by utilizing a rotary cutter, which shall be full size of pipe being cleaned.

3.8 TESTING OF PLUMBING PIPING SYSTEMS

A. During the progress of the work and upon completion, tests shall be made as specified herein and as required by Authorities Having Jurisdiction, including Inspectors, Owner or Architect. The Architect or duly authorized Construction Inspector shall be notified in writing at least 2 working days prior to each test or other Specification requirement which requires action on the part of the Construction Inspector.

B. Tests shall be conducted as part of this work and shall include all necessary instruments, equipment, apparatus, and service as required to perform the tests with qualified personnel. Submit proposed test procedures, recording forms, and test equipment for approval prior to the execution of testing.

C. Tests shall be performed before piping of various systems have been covered or furred-in. For insulated piping systems testing shall be accomplished prior to the application of insulation.

D. All piping systems shall be tested and proved absolutely tight for a period of not less than 24 hours. Tests shall be witnessed by the Architect or an authorized representative and pronounced satisfactory before pressure is removed or any water drawn off.

E. Leaks, damage or defects discovered or resulting from test shall be repaired or replaced to a like new condition. Leaking pipe joints, or defective pipe, shall be removed and replaced with acceptable materials. Test shall be repeated after repairs are completed and shall continue until such time as the entire test period expires without the discovery of any leaks.

F. Wherever conditions permit, each piping system shall thereafter be subjected to its normal operating pressure and temperature for a period of no less than five 5 days. During that period, it shall be kept under the most careful observation. The piping systems must demonstrate the propriety of their installation by remaining absolutely tight during this period.

G. Domestic Water: Pressure test at one and one half times the normal working pressure or 125 psig, whichever is the greater, for 24 hours.

H. Sanitary Soil, Waste and Vents and Storm Sewer:

1. After the rough-in soil, waste and vent and other parts of the sanitary sewer including branch laterals have been set from the lowest level, at point of connection to existing utility lines, to above the floor line, all outlets shall be temporarily plugged or capped, except as are required for testing as described herein. Ground work shall not permit the backfill of trenches to cover any joints until the completion of testing. Back fill shall be limited to mid sections of full joints of piping only. For pipe in ground the piping shall be readied as described herein and filled with water to a verifiable and visible level to 10' above the lowest portions of the system being tested.
2. On multi-level buildings only one floor level shall be tested at a time. Each floor shall be tested from a level below the structure of the floor, or the outlet of the building in the case of the lowest level, to a level of 12 inches above the floor immediately above the floor being tested, or the top of the highest vent in the case of the highest building level. The pipes for the level being tested shall be filled with

water to a verifiable and visible level as described above and be allowed to remain so for 24 hours. If after 24 hours the level of the water has been lowered by leakage, the leaks must be found and stopped, and the water level shall again be raised to the level described, and the test repeated until, after a 24 hour retention period, there shall be no perceptible lowering of the water level in the system being tested.

3. Should the completion of these tests leave any reasonable question or doubt of the integrity of the installation, additional tests including peppermint smoke, or other measures shall be performed to demonstrate the reliability of these systems to the complete satisfaction of the Owner's duly authorized representative. Such tests shall be conducted and completed before any joints in plumbing are concealed or made inaccessible.

3.9 COMPLETE FUNCTIONING OF WORK

A. All work reasonably implied as essential to the complete functioning of the systems shown on the Drawings and Specification shall be completed as part of the work of this Division, unless specifically stated otherwise. It is the intention of the Drawings and Specification to establish the type and function of systems but not to set forth each item essential to the functioning of any system. In case of doubt as to the work intended or in the event of amplification or clarification thereof, the Contractor shall call upon the Architect for Supplementary Instructions and Drawings, etc.

END OF SECTION

SECTION 22 11 16 – DOMESTIC WATER PIPING – CROSS-LINKED POLYETHYLENE (PEX)

PART 1 - GENERAL

1.1 GENERAL REQUIREMENTS

A. The requirements of the General Conditions and Supplementary Conditions apply to all work herein.

B. The Basic Materials and Methods, Section 22 02 00, are included as a part of this Section as though written in full in this document.

1.2 SCOPE

A. The scope of the work shall include the furnishing and complete installation of the piping covered by this Section, with all appurtenances, ready for the Owner's use.

B. Include the following work in addition to items normally part of this Section:

1. Pipe and pipe fittings.

2. Valves.

C. The pipe, fittings, valves, and appurtenances described herein shall be acceptable only where meeting all the requirements stated below:

1. Where acceptable to the local authority having jurisdiction (AHJ).

2. Where suitable for use according to the manufacturer's recommendations and instructions.

3. For domestic water distribution where system pressure is 80 psig or less.

4. For domestic hot and cold water piping which does not penetrate any fire-rated floors.

5. For above ground domestic hot and cold water mains and associated branch lines within dwelling units, downstream of unit main isolation valves and water metering provisions. Provide appropriate transitions at all such locations.

1.3 RELATED WORK

A. Section 22 05 29 – Hangers and Support for Plumbing Piping and Equipment.

B. Section 22 05 48 – Vibration and Seismic Controls for Plumbing Piping.

C. Section 22 05 53 – Identification for Plumbing Piping and Equipment.

D. Section 22 07 19 – Plumbing Piping Insulation.

E. Section 22 10 00 – Plumbing Piping.

F. Section 22 11 19 – Plumbing Specialties.

G. Section 22 30 00 – Plumbing Equipment.

H. Section 22 40 00 – Plumbing Fixtures.

1.4 REFERENCES

A. ASTM International (ASTM):

1. ASTM D 2765 - Test Methods for Determination of Gel Content and Swell Ratio of Crosslinked Ethylene Plastics.
2. ASTM D 6394 - Specification for Sulfone Plastics (SP).
3. ASTM E 84 - Standard Test Method for Surface Burning Characteristics of Building Materials.
4. ASTM E 119 - Standard Test Methods for Fire Tests of Building Construction and Materials.
5. ASTM E 814 - Standard Test Method for Fire Tests of Through-Penetration Fire Stops.
6. ASTM F 876 - Standard Specification for Crosslinked Polyethylene (PEX) Tubing.
7. ASTM F 877 - Standard Specification for Crosslinked Polyethylene (PEX) Plastic Hot- and Cold-Water Distribution Systems.
8. ASTM F 1960 - Standard Specification for Cold Expansion Fittings with PEX Reinforcing Rings for Use with Crosslinked Polyethylene (PEX) Tubing.

B. American Water Works Association (AWWA):

1. AWWA C651Standard for Disinfecting Water Mains
2. AWWA C904 Standard for Crosslinked Polyethylene (PEX) Pressure Pipe, 1/2 in. Through 3 in., for Water Service.

C. American National Standards Institute (ANSI)/National Sanitation Foundation (NSF)

1. ANSI/NSF Standard 14 Plastics Piping System Components and Related Materials.
2. ANSI/NSF Standard 61 Drinking Water System Components - Health Effects.
3. ANSI/NSF Standard 359 Valves for Crosslinked Polyethylene (PEX) Water Distribution Tubing Systems.

D. American National Standards Institute (ANSI)/Underwriters Laboratories, Inc. (UL)

1. ANSI/UL 263 Standard for Safety for Fire Tests of Building Construction and Materials.
2. ANSI/UL 2846 Standard for Fire Test of Plastic Water Distribution Plumbing Pipe for Visible Flame and Smoke Characteristics.

E. American Society of Mechanical Engineers (ASME):

1. ASME B 16.5 Pipe Flanges and Flanged Fittings: NPS 1/2 through NPS 24 Metric/Inch Standard.

F. Canadian Standards Association (CSA)

1. CAN/CSA B137.5 Crosslinked Polyethylene (PEX) Tubing Systems for Pressure Applications.

G. International Code Council (ICC)

1. International Plumbing Code (IPC)

H. International Association of Plumbing Officials (IAPMO)

1. Uniform Plumbing Code (UPC)

I. National Association of Plumbing, Heating and Cooling Contractors (NAPHCC)

1. National Standard Plumbing Code (NSPC)

J. Plastics Pipe Institute (PPI)

1. PPI Technical Report TR-4/06

K. Underwriters Laboratories (UL):

1. UL 2846 Standard for Fire Tests of Plastic Water Distribution Plumbing Pipe for Visible Flame and Smoke Characteristics.

L. Uponor, Inc.

1. Uponor Professional Plumbing Installation Guide (UPPIG), latest edition.
2. Uponor Plumbing Design Assistance Manual (PDAM), latest edition.

1.5 QUALITY ASSURANCE

A. Manufacturer: For each product specified, provide components by the same manufacturer throughout.

B. Valves: Manufacturer's name, size, and pressure rating cast or marked on valve body or handle.

C. Piping shall be labeled along entire length indicating size, class, material specification, manufacturer’s name and **country of origin**.

D. Foreign pipe, fittings or valves are unacceptable.

E. All installers must be trained and certified installers by the manufacturer, each with a current certification card.

1.6 SUBMITTALS

A. Submit under provisions of Division One.

B. Submit product data under provisions of Division One.

C. Include pipe materials, pipe fittings, valves, and accessories. Provide manufacturer’s catalog information, product certifications, and **country of origin**. Indicate valve data and ratings.

1.7 PROJECT RECORD DOCUMENTS

A. Submit under provisions of Division One.

B. Record actual locations of valves.

1.8 OPERATION AND MAINTENANCE DATA

A. Submit under provisions of Division One.

B. Maintenance Data: Include installation instructions, spare parts lists, exploded assembly views.

1.9 QUALIFICATIONS

A. Manufacturer: Company specializing in manufacturing the Products specified in this section with minimum 5 years documented experience and must be a domestic manufacturer.

B. Installer: Company specializing in performing the work of this section with minimum 5 years documented experience on projects of similar size and complexity and with documentation proving successful completion of plumbing system installation and/or training by the PEX tubing manufacturer.

1.10 REGULATORY REQUIREMENTS

A. Perform work in accordance with plumbing and building codes having jurisdiction.

1.11 DELIVERY, STORAGE, AND HANDLING

A. Comply with provisions of Division One.

B. Ordering: Comply with manufacturer's ordering instructions and lead-time requirements to avoid construction delays.

C. Delivery: Deliver materials in manufacturer's original, unopened, undamaged containers with identification labels intact.

D. Storage and Protection: Store materials protected from exposure to harmful environmental conditions and at temperature and humidity conditions recommended by the manufacturer.

1. Store PEX tubing in cartons or under cover to avoid dirt or foreign material from entering the tubing.
2. Do not expose PEX tubing to direct sunlight for more than 30 days. If construction delays are encountered, cover the tubing to prevent exposure to direct sunlight.

E. Damaged materials shall not be acceptable.

F. Protect piping systems from entry of foreign materials by providing temporary covers, completing sections of the work, and isolating parts of completed systems. Tape will not be allowed as an acceptable end cover.

1.12 EXTRA MATERIALS

A. Furnish under provisions of Division One.

1.13 WARRANTY

A. Project Warranty: Refer to Conditions of the Contract for project warranty provisions.

B. Manufacturer's Warranty: PEX-a manufacturer system warranty shall cover piping and fittings for a duration of 25 years from the date of installation. Piping system warranty shall apply to potable water distribution and water service systems constructed of pipe and fitting products sourced from the same manufacturer.

PART 2 - PRODUCTS

2.1 ACCEPTABLE MANUFACTURERS

A. Uponor, Inc.

2.2 PEX PIPE AND FITTINGS

A. PEX-a (Engel-Method Crosslinked Polyethylene) Piping: ASTM F 876 and F877 (CAN/CSA-B137.5).

B. PEX-a Fittings: elbows, adapters, couplings, plugs, tees and multi-port tees (1/2 inch through 3 inch nominal pipe size): ASTM F1960 cold-expansion fitting manufactured from the following material types:

1. Reinforcing cold-expansion rings shall be manufactured from the same source as PEX-a piping manufacturer and marked "F1960".
2. UNS No. C69300 Lead-free (LF) Brass.
3. 20% glass-filled polysulfone as specified in ASTM D 6394.
4. Unreinforced polysulfone (group 01, class 1, grade 2) as specified in ASTM D 6394.
5. Polyphenylsulfone (group 03, class 1, grade 2) as specified in ASTM D 6394.
6. Blend of polyphenylsulfone (55-80%) and unreinforced polysulfone (rem.) as specified in ASTM D 6394.

C. Multi-Port Tees: Multiple-outlet fitting complying with ASTM F 877 (CAN/CSA B137.5); with ASTM F 1960 inlets and outlets.

1. Engineered polymer branch multi-port tee.
2. Engineered polymer flow-through multi-port tee.
3. Engineered polymer commercial branch multi-port tee.
4. Engineered polymer commercial branch multi-port elbow.
5. Engineered polymer commercial flow-through multi-port tee.

D. Manifolds: Multiple-outlet assembly complying with ASTM F 877 (CAN/CSA B137.5); with ASTM F 1960 outlets.

1. Lead - free copper branch manifold.
2. Lead-free copper valved manifold.
3. Engineered polymer valved manifold.
4. Engineered polymer valveless manifold.

2.3 TRANSITION FITTINGS

A. PEX-to-Metal Transition Fittings:

1. Manufacturers: Provide fittings from the same manufacturer of the piping.
2. Threaded Brass to PEX-a Transition: one-piece brass fitting with male or female threaded adapter and ASTM F 1960 cold-expansion end, with PEX-a reinforcing cold-expansion ring.
3. Brass Sweat to PEX-a Transition: one-piece brass fitting with sweat adapter and ASTM F 1960 cold-expansion end, with PEX-a reinforcing cold-expansion ring.
4. PEX-a to Flange Transition: two-piece brass fitting with lead-free ProPEX adapter and steel flange conforming to ASME B 16.5.

B. PEX-to-Thermoplastic Transition Fittings: CPVC to PEX-a Transition: Thermoplastic fitting with one spigot or socket end and one ASTM F 1960 cold-expansion end, with PEX-a reinforcing cold-expansion ring.

2.4 VALVES

A. PEX-to-PEX, Lead Free (LF) Brass Ball Valves (1/2 inch through 2 inch nominal pipe size)

1. Manufacturers: Provide ball valve(s) from the same manufacturer as the piping system.
2. Full-port ball valve: two-piece, ASTM F1960 cold-expansion ends, with PEX-a reinforcing cold-expansion ring.
3. LF brass valve with a positive stop shoulder manufactured from C69300 brass.
4. In compliance with: 250 CWP, ANSI/NSF 359, ANSI/NSF 14/61, cNSF-us-pw_G lead free 0.25% Lead max., ASTM F1960, ASTM F 877 (CAN/CSA B137.5).

B. Refer to Section 22 10 00 for requirements for ball valves larger than 2 inch. Provide adapters/transitions accordingly.

PART 3 - EXECUTION

3.1 EXAMINATION

A. Site Verification of Conditions: Verify that site conditions are acceptable for installation of the domestic water piping. Do not proceed with installation until unacceptable conditions are corrected.

3.2 GENERAL PRACTICES

A. Install all materials in accordance with manufacturer's published instructions.

B. Install piping to conserve building space and not conflict with other trades or interfere with intended use of space.

C. Group piping whenever practical at common elevations.

D. Install piping to allow for expansion and contraction without stressing pipe, joints, or connected equipment.

E. Provide clearance for installation of insulation and access to valves and fittings.

F. Provide access doors where valves and operable fittings are not exposed. Access doors shall be of approved types set in locations pre-approved by submittal to the Architect.

G. Install valves with stems upright or horizontal, not inverted.

H. Install ball valves for shut-off and to isolate all equipment items, distinct parts of systems, or vertical risers.

I. Each plumbing fixture shall have a shut-off valve on each hot water and cold water supply line.

J. Each plumbing water rough-in stub out shall be fitted with a shut off valve.

K. Ball valves installed in insulated piping shall be fitted with extended lever operators of sufficient length to raise handle above the insulation jacket material. Where valve is used for throttling service valve handle shall be equipped with adjustable memory stop device.

L. Provide for complete system drainage. Slop horizontal piping uniformly to low points. Providing clearly identified supplementary drain valves where faucets, hose bibbs, hydrants, or sill cocks will not suffice for this requirement.

M. Provide water hammer arresters as indicated in Section 22 11 19.

3.3 INSTALLATION

A. Install plumbing system according to approved shop drawings and coordination drawings.

B. Comply with manufacturer's latest product data, including product technical bulletins, installation instructions and design drawings, including the following.

C. Piping Installation:

1. Install PEX-a Pipe Support, arms and offsets in compliance with Chapter 5 - "System Design and Layout" in the Uponor Plumbing Design Assistance Manual (PDAM).
2. PEX shall not be installed in areas within five feet of UV light.
3. PEX shall not be installed within 6” of any gas appliance vents.
4. PEX shall not be installed within 12” of any recessed light fixture unless the piping is protected with suitable insulation or the fixture is insulation contact (I.C.) rated.
5. PEX shall not be installed between a tub/shower valve and tub spout. Provide type L copper water tube for this application.
6. PEX shall not be installed at connections to or within 24” of domestic water heating equipment. Provide type L copper water tube for these applications. This shall include, but not necessarily be limited to, the following:
    a. gas and electric storage type and tankless water heaters
    b. hot water storage and thermal expansion tanks
    c. hot water circulating pumps
    d. thermostatic mixing valves
7. Only approved and appropriate firestop materials shall be used with PEX piping.
8. When transitioning from PEX to other piping materials, follow the appropriate installation instructions for that product.
9. Install piping in full compliance with manufacturer's Plumbing Installation Guide.

D. Hangers and Supports:

1. Horizontal PEX-a Piping Hangers: Install CTS hangers suitable for PEX-a piping in compliance with Chapter 6 - "Installation Methods" of the Uponor Plumbing Design Assistance Manual (PDAM) and local codes, with the following maximum spacing:
    a. For IPC Jurisdictions: 3 inch and below: Maximum span, 32 inches.
    b. For UPC Jurisdictions:1 inch and below: Maximum span, 32 inches.
    c. For UPC Jurisdictions: 1-1/4 inch and above: Maximum span, 48 inches.
    d. Note: The above maximum hanger spacing requirements may be extended with the use of a continuous support channel such as Uponor PEX-a Pipe Support.
2. Horizontal PEX-a Piping with PEX-a Pipe Channel: Install hangers for PEX-a piping with horizontal support channel in accordance with local jurisdiction and manufacturer's recommendations, with the following maximum spacing:
    a. 3/4 inch and below: Maximum span, 6 feet.
    b. 1 inch and above: Maximum span, 8 feet.
3. Vertical PEX-a Piping: Support PEX-a piping with maximum spacing of 5 feet.

E. Piping Schedule

1. Aboveground domestic water piping (3 inch and smaller) shall be the following: PEX-

a piping, with engineered polymer (EP) or lead-free brass F1960 cold-expansion fittings.

F. Pipe Joint Construction: PEX-a Connections: Install per manufacturer's recommendations. Use manufacturer-recommended cold-expansion tool for ASTM F 1960 connections.

G. Field Quality Control: Do not expose PEX piping to direct sunlight for more than 30 days. If construction delays are encountered, provide cover to portions of piping exposed to direct sunlight.

H. Insulation: Provide insulation of PEX piping as indicated below, while referring to Section 22 07 19 for all other piping insulation related requirements:

1. Insulate all domestic hot water and hot water return piping.
2. Insulate all piping subject to freezing conditions.
3. Insulate all piping installed in an unconditioned space or poorly ventilated area with excessive moisture content.
4. Insulate all domestic cold water piping located in exterior walls and to a point no less than 8’-0” inside the building.

3.4 DISINFECTION OF DOMESTIC WATER PIPING SYSTEM

A. Provide disinfection of the domestic water piping system in accordance with local code requirements and the manufacturer’s recommendations, as described below.

B. Prior to starting work, piping system shall be complete and initially flushed clean with potable water.

C. For hybrid systems, PEX piping shall be disinfected in accordance with AWWA C651. Use a chlorine solution of 50 parts per million (ppm) for 24 hours or 200 ppm for three hours. In no case should disinfection solution stand in the system for longer than 24 hours. Flush the system with potable water after disinfection.

3.5 TESTING OF PLUMBING PIPING SYSTEMS

A. During the progress of the work and upon completion, tests shall be made as specified herein and as required by Authorities Having Jurisdiction, including Inspectors, Owner or Architect. The Architect or duly authorized Construction Inspector shall be notified in writing at least 2 working days prior to each test or other Specification requirement which requires action on the part of the Construction Inspector.

B. Tests shall be conducted as part of this work and shall include all necessary instruments, equipment, apparatus, and service as required to perform the tests with qualified personnel. Submit proposed test procedures, recording forms, and test equipment for approval prior to the execution of testing.

C. Tests shall be performed before piping of various systems have been covered or furred-in. For insulated piping systems testing shall be accomplished prior to the application of insulation.

D. All piping systems shall be leak tested and proved absolutely tight for a period of not less than 24 hours. Tests shall be witnessed by the Architect or an authorized representative and pronounced satisfactory before pressure is removed or any water drawn off.

E. Leaks, damage or defects discovered or resulting from test shall be repaired or replaced to a like new condition. Leaking pipe joints, or defective pipe, shall be removed and replaced with acceptable materials. Test shall be repeated after repairs are completed and shall continue until such time as the entire test period expires without the discovery of any leaks.

F. Wherever conditions permit, each piping system shall thereafter be subjected to its normal operating pressure and temperature for a period of no less than five 5 days. During that period, it shall be kept under the most careful observation. The piping systems must demonstrate the propriety of their installation by remaining absolutely tight during this period.

3.6 COMPLETE FUNCTIONING OF WORK

A. All work fairly implied as essential to the complete functioning of the systems shown on the Drawings and Specification shall be completed as part of the work of this Division unless specifically stated otherwise. It is the intention of the Drawings and Specification to establish the type and function of systems but not to set forth each item essential to the functioning of any system. In case of doubt as to the work intended or in the event of amplification or clarification thereof, the Contractor shall call upon the Architect for Supplementary Instructions and Drawings, etc.

END OF SECTION

SECTION 26 51 15 – Ceiling Fans

PART 1 - GENERAL

1.01 SUMMARY

A. This Section includes ceiling mounted fans.

B. Related Sections:
1. 09 21 16 Gypsum Board Assemblies
2. 09 51 00 Acoustical Ceilings

C. Submittals: Submit properly identified manufacturer's catalog cuts and technical data before ordering and installing products.

D. Quality Assurance
1. Fans to be installed, supported and balanced, per manufacturers recommendations.

PART 2 - PRODUCTS

2.01 MANUFACTURERS

A. Ceiling Mounted Fans: (basis of design)
1. Kichler Lighting, Arkwright Collection
   a. Model: 300146 AP with blade kit 370029AP
   b. Style: Antique Pewter Finish with white Blades
   c. Accessories:
      i. No light kit installed
      ii. 3-Speed wall switch controller (no remote control device)

PART 3 - EXECUTION

3.01 INSTALLATION

A. Install in accordance with manufacturer's recommendations. Prior to installation, all related work with in the area shall be accepted as complete.
B. Downrod trim shall be flushed with acoustical ceiling.
C. Protect equipment upon installation from damage, debris and dirt.
D. Perform final clean upon substantial completion of project. Equipment shall be brought to new condition.

END OF SECTION

LLANO COUNTRY ADDITION

BEING A 5.000 ACRE TRACT OF LAND OUT OF SECTION 23, BLOCK 40, T-1-S, T&P RR. CO. SURVEY,
CITY AND COUNTY OF MIDLAND, TEXAS

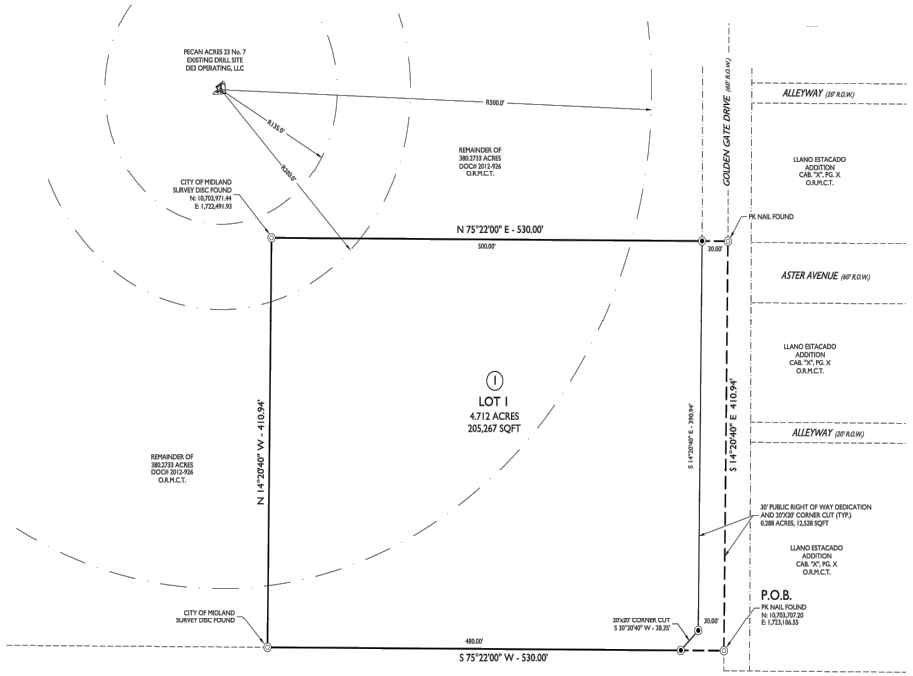

FEMA NOTE

FLOOD STATEMENT: ACCORDING TO FEMA'S N.F.I.P. FLOOD INSURANCE RATE MAP #48329C0201E, DATED SEPTEMBER 16, 2005, THIS PROPERTY IS WITHIN THE UNSHADED PORTION OF ZONE "X", DESIGNATED AS "AREAS DETERMINED TO BE OUTSIDE THE 0.2% ANNUAL CHANCE FLOODPLAIN."

THIS FLOOD STATEMENT DOES NOT IMPLY THAT THE PROPERTY AND/OR THE STRUCTURES THEREON WILL BE FREE FROM FLOODING OR FLOOD DAMAGE. ON RARE OCCASIONS, GREATER FLOODS CAN AND WILL OCCUR AND FLOOD HEIGHTS MAY BE INCREASED BY MAN-MADE OR NATURAL CAUSES. THIS STATEMENT SHALL NOT CREATE LIABILITY ON THE PART OF MAVERICK SURVEY, LLC.

DEVELOPMENT NOTES

1. *SELLING A PORTION OF THIS ADDITION BY METES AND BOUNDS MAY BE A VIOLATION OF CITY ORDINANCE AND STATE LAW AND SUBJECT TO FINES AND WITHHOLDING OF UTILITIES AND BUILDING PERMITS.*
2. *APPROVAL OF A SITE PLAN BY THE CITY OF MIDLAND MAY BE REQUIRED BEFORE THE DEVELOPMENT OF ANY LOT AND BEFORE A BUILDING PERMIT MAY BE OBTAINED.*
3. *BEARINGS/DISTANCES/COORDINATES ARE RELATIVE TO THE TEXAS STATE PLANE COORDINATE SYSTEM, TEXAS CENTRAL ZONE, NORTH AMERICAN DATUM OF 1983.*
4. *THE INSTALLATION OF IMPROVEMENTS MAY BE REQUIRED BY THE CITY OF MIDLAND AS SUCH TIME AS:*
   (1) THE REPRESENTED LOT IS REPLATTED FOR SUBDIVISION INTO MORE THAN ONE LOT OR :
   (2) THE PROPERTY IS REZONED FOR A MORE INTENSIVE USE.

PROPERTY OWNER

THE CITY OF MIDLAND
300 N. LORAINE
MIDLAND, TX 79701
DEED INSTRUMENT # 2015-19186

DRAINAGE EASEMENT DEDICATED WITH THIS PLAT

1. THE CITY OF MIDLAND AND ITS EMPLOYEES, CONTRACTORS, AGENTS, SUCCESSORS, AND ASSIGNS, SHALL HAVE THE FREE AND UNINTERRUPTED RIGHT OF PASSAGE IN, ON, UPON, OVER, UNDER, ACROSS, ALONG AND THROUGH THE PROPERTY DESCRIBED HEREIN FOR THE PURPOSE OF ESTABLISHING, LAYING, CONSTRUCTING, RECONSTRUCTING, INSTALLING, REALIGNING, MODIFYING, REPLACING, IMPROVING, ALTERING, OPERATING, MAINTAINING, ACCESSING, INSPECTING, REPAIRING, RELOCATING AND REMOVING DRAINAGE IMPROVEMENTS, INCLUDING, BUT NOT LIMITED TO, THE RIGHT TO CUT AND TRIM BUSHES AND TREES, TOGETHER WITH THE RIGHT OF INGRESS, EGRESS AND REGRESS FOR SUCH PURPOSES IN, ON, UPON, OVER, UNDER, ACROSS, ALONG AND THROUGH THE PROPERTY DESCRIBED HEREIN.

2. DEVELOPER MAY NOT USE ANY PART OF THE PROPERTY DESCRIBED HEREIN IF SUCH USE WILL DAMAGE, DESTROY, INJURE, AND/OR UNDULY INTERFERE WITH THE CITY OF MIDLAND'S USE OF THE PROPERTY. DEVELOPER EXPRESSLY COVENANTS AND AGREES FOR ITSELF, ITS LEGAL REPRESENTATIVES, SUCCESSORS AND/OR ASSIGNS, THAT NO BUILDING, ROADWAYS, OR CURBS AND GUTTERS OF ANY KIND WILL BE PLACED ON THE PROPERTY DESCRIBED HEREON. WRITTEN PERMISSION FOR ABOVE GROUND APPURTENANCES MUST BE OBTAINED FROM THE CITY OF MIDLAND, PRIOR TO INSTALLATION.

3. THE CITY OF MIDLAND SHALL HAVE THE RIGHT TO MITIGATE DEFICIENCIES IN THE FUNCTION OF THE STORMWATER FACILITY, AND TO BE REIMBURSED BY THE PROPERTY OWNER, IF THE CITY FINDS IT NECESSARY FOR PUBLIC HEALTH AND SAFETY.

4. THE MAINTENANCE OF ANY STORMWATER FACILITY IN THIS EASEMENT IS THE RESPONSIBILITY OF THE PROPERTY OWNER. PROPERTY OWNER AGREES TO MAINTAIN THE FACILITY IN WORKING ORDER, WITH INSPECTIONS AND CORRECTIVE ACTION MADE AT LEAST ANNUALLY. REPORTS OF SUCH INSPECTIONS AND MAINTENANCE SHALL BE KEPT FOR INSPECTION BY THE CITY OF MIDLAND STORMWATER ADMINISTRATOR ON REQUEST, OR MAY BE FORWARDED TO THE CITY ENGINEER'S OFFICE.

OWNER'S CERTIFICATE

THE STATE OF TEXAS
COUNTY OF MIDLAND

WHEREAS THE CITY OF MIDLAND, is the record owner of a tract of land situated in Section 23, Block 40, T-1-S, T&P RR. Co. Survey, City and County of Midland, Texas.

NOW, THEREFORE, KNOW ALL MEN BY THESE PRESENTS:

That THE CITY OF MIDLAND, being the owner of the land shown on this plat designated as LLANO COUNTRY ADDITION, an Addition to the City of Midland, Midland County, Texas and whose name is subscribed hereto, do hereby dedicate to the public use thereon the streets, alleys, and easements shown thereon; and do hereby give an easement of ingress and egress to the City of Midland for garbage and trash collection, and location and maintenance of trash containers and access thereto, and condition said easement that no construction shall commence on said lot or lots until the exact location of said containers therewith has been selected and approved by the Director of Utilities.

WITNESS my hand at _____, _____, this

the _____ day of _____, 2019.

By: COURTNEY SHAW, CITY MANAGER

ACKNOWLEDGEMENT

THE STATE OF TEXAS
COUNTY OF MIDLAND

Before me, the undersigned authority, a Notary Public in and for the State of Texas, on this day personally appeared COURTNEY SHARP, known to me to be the person whose name is subscribed to the foregoing instrument, and acknowledged to me that he was acting as owner, and that he executed the same for the purposes and consideration therein expressed, and in the capacity therein stated. Given under my hand and seal of office this

the _____ day of _____, 2019.

NOTARY PUBLIC IN AND FOR THE STATE OF TEXAS

CERTIFICATE OF APPROVAL

This is to certify that the above and foregoing plat of LLANO COUNTRY ADDITION, was approved by proper action of the City Planning and Zoning Commission of the City of Midland, Texas on this

_____ day of _____ 2019.

JOSH SPARKS, CHAIRMAN

CRISTINA ODENBORG BURNS, SECRETARY

UTILITY COMPANY'S CERTIFICATE

This plat has been checked for accessibility of utilities.

ATMOS ENERGY
BY: _____

AT&T
BY: _____

SUDDENLINK COMMUNICATION
BY: _____

GRANDE COMMUNICATION
BY: _____

ONCOR ELECTRIC DELIVERY
BY: _____

PLAT FILED FOR RECORD
MIDLAND COUNTY, TEXAS

NO. _____ CABINET _____

DATE _____ PAGE _____

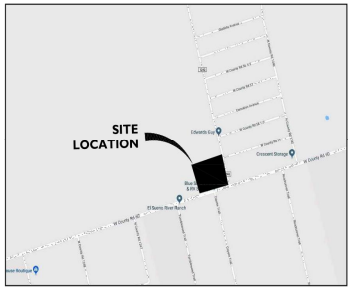

VICINITY MAP

N.T.S.

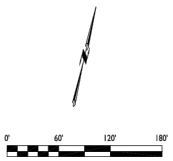

LEGEND

◉	DENOTES SET 1/2-INCH IRON ROD
ⓞ	DENOTES FOUND MONUMENT AS NOTED
⛽	DENOTES EXISTING PUMP JACK
O.P.M.C.T.	DENOTES OFFICIAL RECORDS, MIDLAND CO., TX
P.R.M.C.T.	DENOTES PLAT RECORDS, MIDLAND CO., TX
———	DENOTES BOUNDARY LINE
- - - - -	DENOTES ADJACENT LOTS
·—·—·—·	DENOTES EXISTING EASEMENT LINE

SURVEYOR'S CERTIFICATE

KNOW ALL MEN BY THESE PRESENTS:

That I, WESLEY C. HUNTER, a Registered Professional Land Surveyor of the State of Texas, do hereby certify that this plat was prepared from an actual and accurate survey of the land and that the corner monuments shown thereon were properly located under my personal supervision, in accordance with the Subdivision Regulations of the City of Midland, Texas.

WESLEY C. HUNTER, R.P.L.S.
Registered Professional Land Surveyor #6268
Maverick Survey, LLC (TX Firm #10194452)
1909 W. Wall Street, Suite K
Midland, TX 79701

MAVERICK
ENGINEERING / SURVEY / WATER RESOURCES
1909 West Wall Street, Suite "K"
Midland, Texas 79701
ENGINEER FIRM #: F-15089
SURVEY FIRM #: 10194452
Tel: (432) 262-0999 Fax: (432) 262-0989
www.Maverick-Eng.com

LLANO COUNTRY ADDITION

PLAT SCALING NOTE

THE PLAT HAS BEEN SCALED TO FIT ON THIS SHEET.

MAVERICK ENGINEERING
1909 West Wall Street, Suite "K"
Midland, Texas 79701 FIRM: F-15089
Tel: (432) 262-0999 Fax: (432) 262-0989
www.MaverickEngr.com

NO.	REVISIONS	BY	APPR.	DATE
1	FOR CONSTRUCTION	C.L.B.	A.L.M.	12-20-20

DRAWN BY: C.L.B.
CHECKED BY: A.L.M.
APPROVED BY:
DATE: 05/14/2019
JOB: 180218

FINAL PLAT
FIRE STATION 11
LOT 01, BLOCK 01, LLANO COUNTRY ADDITION,
AN ADDITION TO THE CITY OF MIDLAND,
MIDLAND COUNTY, TEXAS.

SURVEY NOTE:
THE SURVEY SHOWN ON THIS SHEET IS INCLUDED FOR REFERENCE PURPOSES ONLY. THE SEALING PROFESSIONAL TAKING RESPONSIBILITY FOR THE SURVEY IS NOTED THERE ON.

SHEET C110 OF 19

F:\2018\180218-MARTINEZ, ARCHITECTS-FIRE STATION 11 CIVIL\DRAWINGS\CIVIL CONSTRUCTION PLANS 180218 C110 FINAL PLAT.DWG
© COPYRIGHT 2018 ALL RIGHTS RESERVED

4.1756

Know what's below. Call before you dig.

LEGEND

- DENOTES FOUND MONUMENT AS NOTED
- DENOTES SET 1/2" IRON ROD W/PLASTIC CAP MARKED "CTLS"
- DENOTES TEMPORARY BENCHMARK
- DENOTES EXISTING FIRE HYDRANT
- DENOTES EXISTING WATER VALVE
- DENOTES EXISTING MANHOLE
- DENOTES EXISTING GUY ANCHOR
- DENOTES EXISTING POWER POLE
- DENOTES EXISTING CONTOUR
- DENOTES BOUNDARY LINE
- DENOTES SURROUNDING PROPERTY
- DENOTES EXISTING FLOODWAY
- DENOTES EDGE OF ASPHALT
- DENOTES EXISTING OVERHEAD ELECTRIC LINE
- DENOTES EXISTING FENCE
- DENOTES EXISTING GAS LINE
- DENOTES EXISTING UNDERGROUND CABLE LINE
- DENOTES EXISTING WATER LINE
- DENOTES EXISTING 6" WATER LINE
- DENOTES EXISTING 8" WATER LINE
- DENOTES EXISTING 16" WATER LINE
- DENOTES EXISTING 36" WATER LINE

FG FINISH GRADE ELEVATION
FL FLOW LINE ELEVATION
TC TOP OF CURB ELEVATION
GU GUTTER ELEVATION
EX EXSTING ELEVATION
FF FINISH FLOOR ELEVATION
SW SIDEWALK ELEVATION

GRADING NOTES:

- TYPICAL DROP OFF FROM FINISHED FLOOR TO TOP OF LANDSCAPE GRADE IS 3' UNLESS OTHERWISE NOTED.
- SIDEWALK / ADA PATH GRADES ARE NOT TO EXCEED 5.0% LONGITUDINALLY OR 2.0% TRANSVERSALY.
- SLOPES SHOWN ARE TYPICALLY CALCULATED FROM THE GUTTER LIP GRADE. PLEASE NOTE THAT THIS IS DIFFERENT FROM THE ACTUAL GUTTER GRADE, WHISH IS SLIGHTLY LOWER THAN THE LIP. THE LIP IS GENERALLY 6 INCHES BELOW THE TOP OR BACK OR CURB UNLESS NOTED OTHERWISE.

MAVERICK ENGINEERING
1909 West Wall Street, Suite "K"
Midland, Texas 79701 TBPE#: F-15089
Tel: (432) 262-9993 Fax: (432) 262-9989
www.MaverickEngr.com

NO.	REVISIONS	BY	APPR.	DATE
1	FOR CONSTRUCTION	CLB	ALM	02-26-20

DRAWN BY: CLB
CHECKED BY: ALM
APPROVED BY: ALM
DATE: 05/14/2019
JOB: 180218

GRADING PLAN ALT 1

FIRE STATION 11

LOT 01, BLOCK 01, LLANO COUNTRY ADDITION,
AN ADDITION TO THE CITY OF MIDLAND,
MIDLAND COUNTY, TEXAS.

STATE OF TEXAS
ANDREW L. MELLEN
106572
LICENSED
PROFESSIONAL ENGINEER
01/17/2020

SHEET C230 OF 19

4.1757

© COPYRIGHT 2018 ALL RIGHTS RESERVED

F:\2018\180218-MARTINEZ, ARCHITECTS-FIRE STATION 11 CIVIL\3-DRAWINGS\CIVIL CONSTRUCTION PLANS 180218 C230 GRADING PLAN ALT 1.DWG

Know what's below. Call before you dig.

LEGEND

- DENOTES FOUND MONUMENT AS NOTED
- DENOTES SET 1/2" IRON ROD W/PLASTIC CAP MARKED "CTLS"
- DENOTES TEMPORARY BENCHMARK
- DENOTES EXISTING FIRE HYDRANT
- DENOTES EXISTING WATER VALVE
- DENOTES EXISTING MANHOLE
- DENOTES EXISTING GUY ANCHOR
- DENOTES EXISTING POWER POLE
- DENOTES EXISTING CONTOUR
- DENOTES BOUNDARY LINE
- DENOTES SURROUNDING PROPERTY
- DENOTES EXISTING FLOODWAY
- DENOTES EDGE OF ASPHALT
- DENOTES EXISTING OVERHEAD ELECTRIC LINE
- DENOTES EXISTING FENCE
- DENOTES EXISTING GAS LINE
- DENOTES EXISTING UNDERGROUND CABLE LINE
- DENOTES EXISTING WATER LINE
- DENOTES EXISTING 6" WATER LINE
- DENOTES EXISTING 8" WATER LINE
- DENOTES EXISTING 16" WATER LINE
- DENOTES EXISTING 36" WATER LINE
- FG FINISH GRADE ELEVATION
- FL FLOW LINE ELEVATION
- TC TOP OF CURB ELEVATION
- GU GUTTER ELEVATION
- EX EXISTING ELEVATION
- FF FINISH FLOOR ELEVATION
- SW SIDEWALK ELEVATION

GRADING NOTES:

- TYPICAL DROP OFF FROM FINISHED FLOOR TO TOP OF LANDSCAPE GRADE IS 3' UNLESS OTHERWISE NOTED.
- SIDEWALK / ADA PATH GRADES ARE NOT TO EXCEED 5.0% LONGITUDINALLY OR 2.0% TRANSVERSALLY.
- SLOPES SHOWN ARE TYPICALLY CALCULATED FROM THE GUTTER LIP GRADE. PLEASE NOTE THAT THIS IS DIFFERENT FROM THE ACTUAL GUTTER GRADE, WHISH IS SLIGHTLY LOWER THAN THE LIP. THE LIP IS GENERALLY 6 INCHES BELOW THE TOP OR BACK OR CURB UNLESS NOTED OTHERWISE.

MAVERICK ENGINEERING
1909 West Wall Street, Suite "K"
Midland, Texas 79701
Tel: (432) 262-9993 Fax: (432) 262-9989
www.MaverickEngr.com
TBPELS FIRM: F-15089

NO.	BY	APPR.	DATE
1	C.L.B.	A.L.M.	12-20-20

REVISIONS
1 FOR CONSTRUCTION

DRAWN BY: C.L.B.
CHECKED BY: A.L.M.
APPROVED BY: A.L.M.
DATE: 05/14/2019
JOB: 180218

GRADING PLAN ALT 2

FIRE STATION 11

LOT 01, BLOCK 01, LLANO COUNTRY ADDITION,
AN ADDITION TO THE CITY OF MIDLAND,
MIDLAND COUNTY, TEXAS.

STATE OF TEXAS
ANDREW L. MELLEN
106572
LICENSED
PROFESSIONAL ENGINEER
01/11/2020

SHEET C230 OF 19

F:\2018\180218-MARTINEZ ARCHITECTS-FIRE STATION 11 CUP\3-DRAWINGS\CIVIL CONSTRUCTION PLANS 180218 C230 GRADING PLAN ALT 2.DWG

© COPYRIGHT 2018 ALL RIGHTS RESERVED

4.1758

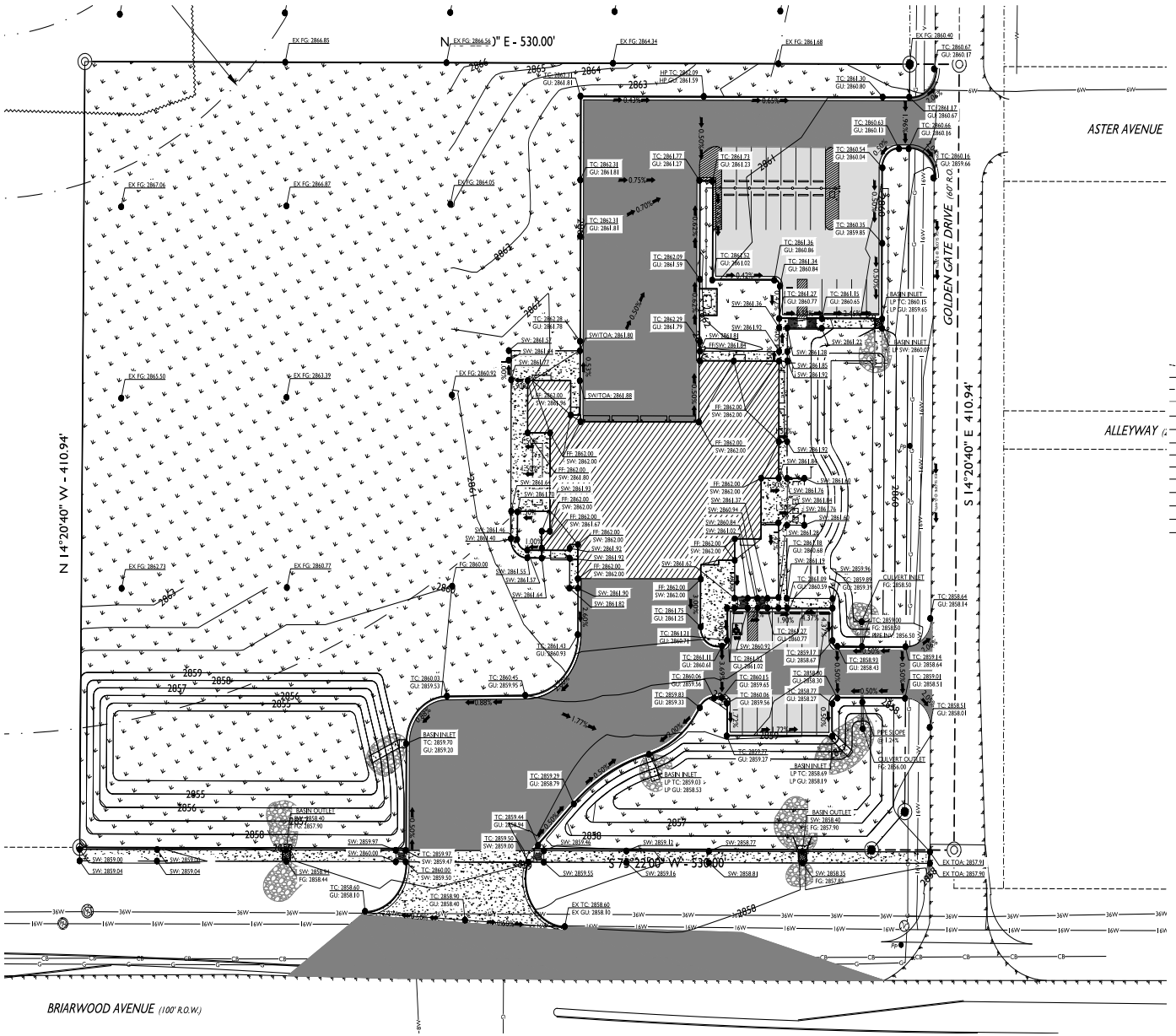

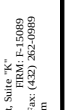

0' 30' 60' 90'

SCALE 1" = 30'

LEGEND

- DENOTES FOUND MONUMENT AS NOTED
- DENOTES SET 1/2" IRON ROD W/PLASTIC CAP MARKED "CTLS"
- DENOTES TEMPORARY BENCHMARK
- DENOTES EXISTING FIRE HYDRANT
- DENOTES EXISTING WATER VALVE
- DENOTES EXISTING MANHOLE
- DENOTES EXISTING GUY ANCHOR
- DENOTES EXISTING POWER POLE
- DENOTES EXISTING CONTOUR
- DENOTES BOUNDARY LINE
- DENOTES SURROUNDING PROPERTY
- DENOTES EXISTING FLOODWAY
- DENOTES EDGE OF ASPHALT
- DENOTES EXISTING OVERHEAD ELECTRIC LINE
- DENOTES EXISTING FENCE
- DENOTES EXISTING GAS LINE
- DENOTES EXISTING UNDERGROUND CABLE LINE
- DENOTES EXISTING WATER LINE
- DENOTES EXISTING 6" WATER LINE
- DENOTES EXISTING 8" WATER LINE
- DENOTES EXISTING 16" WATER LINE
- DENOTES EXISTING 36" WATER LINE

FG	FINISH GRADE ELEVATION
FL	FLOW LINE ELEVATION
TC	TOP OF CURB ELEVATION
GU	GUTTER ELEVATION
EX	EXSTING ELEVATION
FF	FINISH FLOOR ELEVATION
SW	SIDEWALK ELEVATION

GRADING NOTES:

- TYPICAL DROP OFF FROM FINISHED FLOOR TO TOP OF LANDSCAPE GRADE IS 3' UNLESS OTHERWISE NOTED.
- SIDEWALK / ADA PATH GRADES ARE NOT TO EXCEED 5.0% LONGITUDINALLY OR 2.0% TRANSVERSALLY.
- SLOPES SHOWN ARE TYPICALLY CALCULATED FROM THE GUTTER LIP GRADE. PLEASE NOTE THAT THIS IS DIFFERENT FROM THE ACTUAL GUTTER GRADE, WHISH IS SLIGHTLY LOWER THAN THE LIP. THE LIP IS GENERALLY 6 INCHES BELOW THE TOP OR BACK OF CURB UNLESS NOTED OTHERWISE.

MAVERICK ENGINEERING
1909 West Wall Street, Suite "K"
Midland, Texas 79701 TBPE#: F-15089
Tel: (432) 262-9993 Fax: (432) 262-9989
www.MaverickEngr.com

NO.	BY	APPR.	DATE
1	C.L.B.	A.L.M.	02-26-20

REVISIONS
FOR CONSTRUCTION

DRAWN BY:	C.L.B.
CHECKED BY:	A.L.M.
APPROVED BY:	A.L.M.
DATE:	05/14/2019
JOB:	180218

GRADING PLAN BASE BID
FIRE STATION 11
LOT 01, BLOCK 01, LLANO COUNTRY ADDITION,
AN ADDITION TO THE CITY OF MIDLAND,
MIDLAND COUNTY, TEXAS.

STATE OF TEXAS
ANDREW L. MELLEN
106572
LICENSED
PROFESSIONAL ENGINEER
01/17/2020

SHEET C230 OF 19

4.1759

© COPYRIGHT 2018 ALL RIGHTS RESERVED

F:\2018\180218-MARTINEZ_ARCHITECTS-FIRE STATION 11 CIVIL\3-DRAWINGS\CIVIL CONSTRUCTION PLANS 180218 C230 GRADING PLAN BASE BID.DWG

PROPERTY DATA

OWNER:	CITY OF MIDLAND	BUILDING HEIGHT: 36' - 6 3/4"
PROPERTY INFORMATION:		NO. OF STORIES: 2
ADDRESS:	2210 W Golf Course Rd MIDLAND, TX 79701	PARKING REQUIREMENTS:
		PARKING REQUIRED BY CODE: 12
ACREAGE:	0.51 ACRES	PARKING PROVIDED: 16
BUILDING AREA:	6,587 GSF	
LEVEL 1 AREA:	6,587 GSF	
LEVEL 2 AREA:	5,186 GSF	
BUILDING PERIMETER:	345'	

SITE PLAN LEGEND

- PROPERTY BOUNDARIES
- EASEMENT
- PROPOSED FENCE LINE

SITE PLAN KEYED NOTES (#)

62	6" X 6" CONCRETE CURB. RE: 9/A102
AS-2	YELLOW PAINTED PARKING LOT STRIPES (4" X 20' LONG @ PARKING STALLS, SPACED 9'-0" O.C & 4" STRIPES SPACED 36" O.C. @ DIAGONALLY STRIPED)
AS-4	PAINT ACCESSIBILITY LOGO - RE: DETAIL 1/A102
AS-6	HANDICAP-ACCESSIBLE CURB RAMP - RE: 3/A102
AS-7	CONCRETE PAVING (RE: CIVIL DRAWINGS); RE: JOINT DETAILS 5 THRU 8 ON SHEET A/102
AS-8	CONCRETE PAD FOR GENERATOR - RE: ELEC
AS-9	CONCRETE SIDEWALK - RE: 10/A102 & CIVIL DRAWINGS
AS-11	PLASTIC-COVERED CONCRETE-FILLED STEEL PIPE BOLLARDS-OWNER TO SELECT FROM FULL RANGE OF COLORS.P - RE: 4/A102
AS-14	FLAG POLE - RE: 12/A102. PROVIDE FLAG POLE LIGHTING PER ELEC. DWGS.
AS-15	CONCRETE WHEEL STOP RE: 2/A102
AS-17	EMERGENCY GENERATOR - RE: M/E/P DRAWINGS

SITE PLAN KEYED NOTES

AS-20	EXISTING TREES (PROTECT DURING CONSTRUCTION. ANY TREES THAT DIE DURING CONSTRUCTION WILL BE REPLACED AT THE CONTRACTOR'S EXPENSE)
AS-23	A.D.A. APPROVED HANDICAP RESERVED PARKING SIGN-PROVIDE 1 SIGN BELOW ALL HC SPACES STATING: "$50 - $200 FINE WITHOUT VEHICLE PERMIT. ALL VAN ACCESSIBLE STALLS SHALL BE PROVIDED WITH ADDITIONAL SIGNAGE STATING: "VAN ACCESSIBLE" - RE: 15/A102
AS-24	EXISTING TREE TO BE CUT DOWN. REMOVE ROOT BALL AND FILL WITH CLEAN FILL DIRT TO PREPARE FOR NEW PAVING.
AS-25	EXCERCISE PAD
AS-26	EXISTING FENCE TO REMAIN. ANY DAMAGE DURING THE CONSTRUCTION PROCESS WILL BE REPAIRED AT THE CONTRACTOR'S EXPENSE.
AS-27	PRE FIN. MTL DOWNSPOUT
AS-29	GABION WALL & STAINED CEDAR FENCE ENCLOSURE
AS-31	COMMUNICATION TOWER. PROVIDE DATA AND POWER CONDUIT BACK TO IT ROOM.
AS-33	CHAIN LINK FENCE
AS-34	WOOD POST MAILBOX. MUST MET USPS REQUIREMENTS.

GENERAL NOTES

1. PAINT/MARK FIRE LANE AS REQUIRED (RE: PLAN AND NOTES ON SHEET G004 FOR EXTENT AND REQUIREMENTS OF MARKINGS).
2. INSTALL 6" CONCRETE CURBS AT ALL DRIVES, PARKING, ETC. AT VEHICULAR TRAFFIC AREAS, TYP. (RE: 9/A102)
3. DIMENSIONS TO BACK OF CURB. RE: CIVIL FOR ADDITIONAL SITE WORK DIMENSIONS.
4. 2% MAX. CROSS SLOPE @ ALL CROSSWALKS. ACCESSIBLE ROUTES OF TRAVEL AROUND SITE & AT ALL PASSENGER LOADING/UNLOADING AREAS
5. G.C. TO SUBMIT SIDEWALK JT. LAYOUT FOR ARCHITECTS APPROVAL. EXPANSION JTS. @ 20'-0" O.C. MAX. SIDEWALKS 4-1/2" CONC. ON 2" SANDBED W/ 6X6 #6 WWF. (RE: CIVIL)
6. CONTRACTOR TO PRELIMINARILY LAY-OUT BUILDING. ONCE LAID OUT, REVIEW WITH ARCHITECT BEFORE PROCEEDING. COORD. ALL DIMENSIONS & REVIEW ANY DISCREPANCIES BEFORE STARTING WORK
7. MAX. DROP AT ALL EXTERIOR DOORS INCLUDING THRESHOLD SHALL BE BETWEEN 1/4" TO 1/2" MAX. (TYP)
8. PAINT ALL OUTDOOR CONDENSER WATER PIPING/VALVES
9. G.C. TO COORDINATE & ENSURE ALL REQ'D. UTILITIES ARE PROVIDED & FUNCTIONING PRIOR TO CONNECTION. G.C. SHALL BE SOLELY RESPONSIBLE FOR FILING ALL DOCUMENTS & NOTIFICATION OF ALL AGENCIES NECESSARY FOR CONNECTION AND/OR INSTALLATION OF SAID SERVICES
10. CONTRACTOR SHALL USE LINE LOCATOR SERVICE BEFORE BEGINNING TRENCHING OR DIGGING WHEN U.G. UTILITIES ARE SUSPECTED. CONTRACTOR SHALL REPAIR ALL UTILITIES DAMAGED
11. RE: SOIL REPORT FOR ALL FILL REQUIREMENTS
12. RE: CIVIL FOR EROSION CONTROL
13. RE: LANDSCAPING / IRRIGATION DRAWINGS FOR LANDSCAPE REQUIREMENTS.
14. G.C. TO COORDINATE OFFSITE UTILITIES INCLUDING:
    - 14.1 DOMESTIC WATER LINE - RE: CIVIL AND PLUMBING
    - 14.2 FIRE WATER LINE - RE:CIVIL AND PLUMBING
    - 14.3 SANITARY SEWER - RE: CIVIL AND PLUMBING
    - 14.4 ELECTRICAL - RE: ELECTRICAL
    - 14.5 NATURAL GAS - RE: PLUMBING
15. G.C. SHALL BE RESPONSIBLE TO COORDINATE CLEARING PLAN APPROVAL WITH OWNER AND ARCHITECT PRIOR TO CONSTRUCTION
16. COORDINATE WITH OWNER AND ARCHITECT FOR TREES TO REMAIN/ AREA TO REMAIN UNDISTURBED PRIOR TO CONSTRUCTION
17. REFER TO IRRIGATION PLAN FOR IRRIGATION SLEEVES UNDER CONCRETE

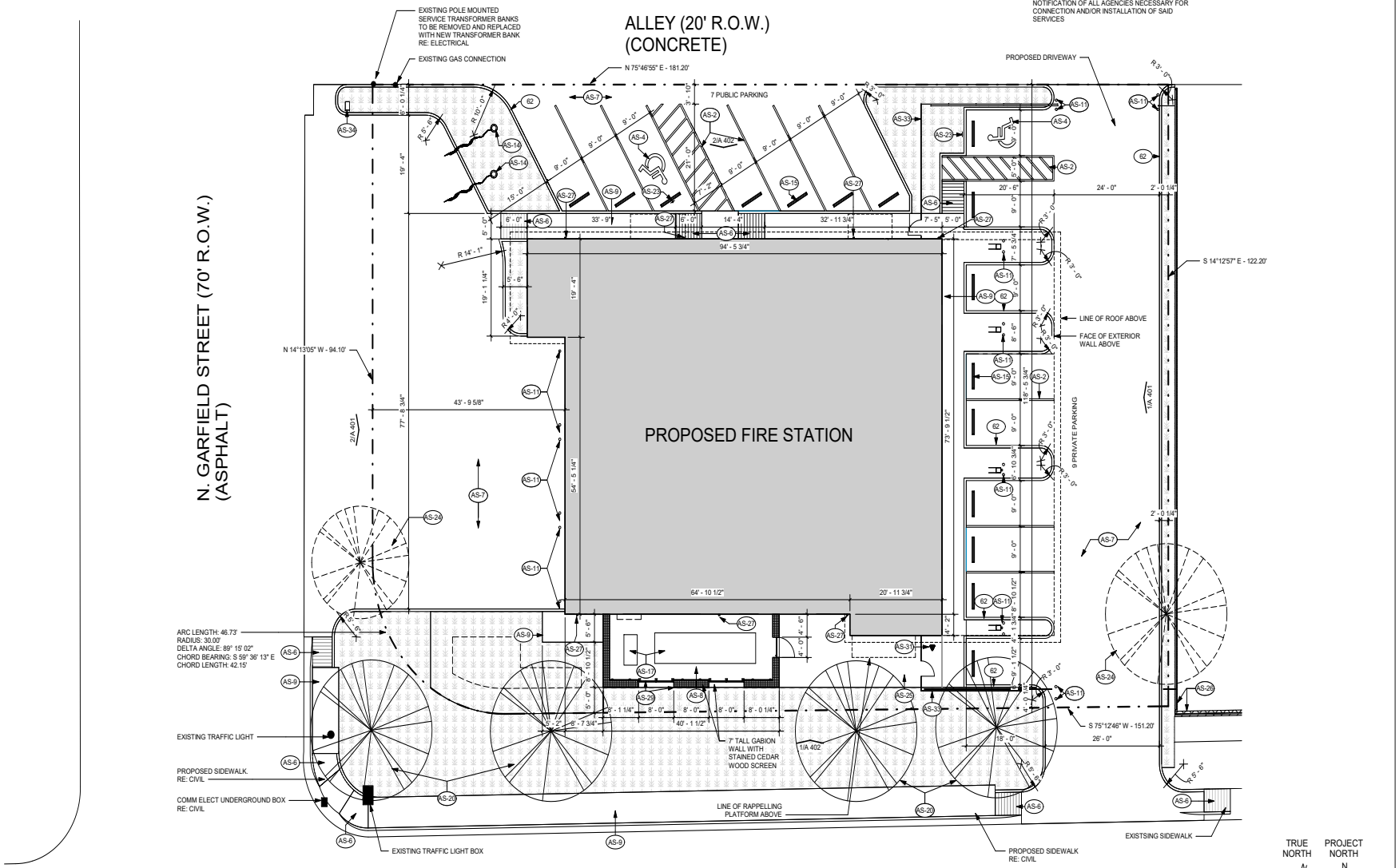

01 SITE PLAN
SCALE: 3/32" = 1'-0"

TRUE NORTH | PROJECT NORTH

PROFESSIONAL SEAL

REGISTERED ARCHITECT JUSTIN E. MYERS STATE OF TEXAS 24840
10-JAN-2020

LOGO/CONTACT

martinez ARCHITECTS

Martinez Architect, LP
900 Rockmead, Suite 250
Houston, Texas 77339
281.346.7371

DESIGN TEAM

Architectural
Martinez Architects

Civil Engineer
Maverick Engineering

Structural
Matrix Structural Engineers

M/E/P/T
DBR

Landscape Architect
KDC Associates

FIRE STATION #5

CITY OF MIDLAND
2210 W GOLF COURSE RD
MIDLAND, TX 79701

PROJECT No: MA 18017
DATE: 16-JAN-2020

ISSUE
- 75% CONSTRUCTION DOCUMENT 26-JUN-2019
- 100% ISSUE FOR PERMIT 30-JUL-2019
- 100% ISSUE FOR BID 30-JAN-2020

ARCHITECTURE SITE PLAN

A 101

4.1760

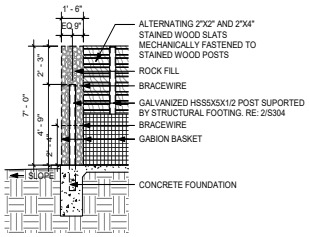

12 GABION WALL DETAIL
SCALE: 1/4" = 1'-0"

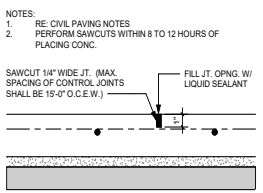

8 CONTROL JOINT
SCALE: 1 1/2" = 1'-0"

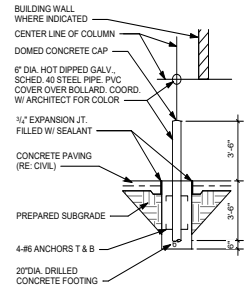

4 PIPE BOLLARD
SCALE: N.T.S.

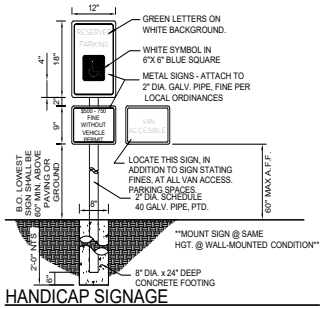

15 HANDICAP SIGNAGE
SCALE: 3/4" = 1'-0"

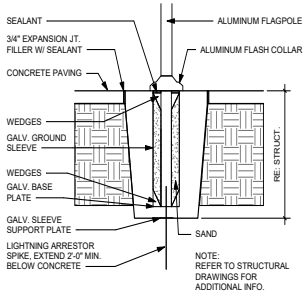

11 FLAG POLE
SCALE: N.T.S.

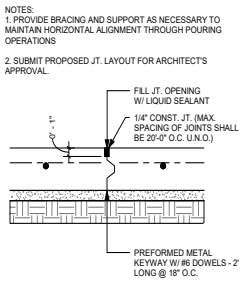

7 CONSTRUCTION JOINT
SCALE: 1 1/2" = 1'-0"

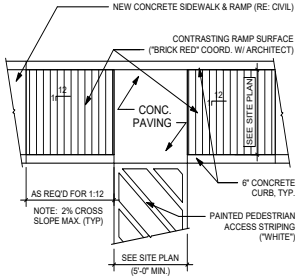

3 HANDICAP RAMP
SCALE: N.T.S.

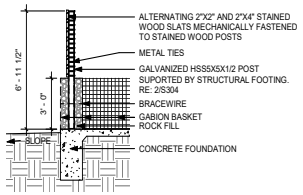

14 GABION WALL DETAIL
SCALE: 1/4" = 1'-0"

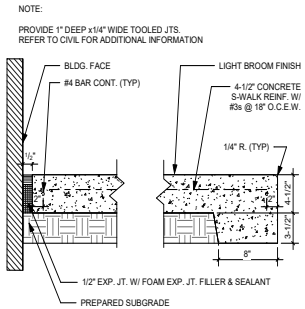

10 TYPICAL SIDEWALK
SCALE: N.T.S.

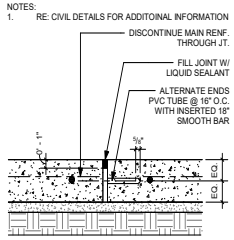

6 EXPANSION JOINT
SCALE: 1 1/2" = 1'-0"

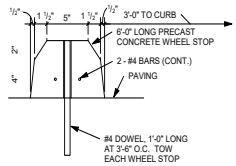

2 WHEEL STOP
SCALE: N.T.S.

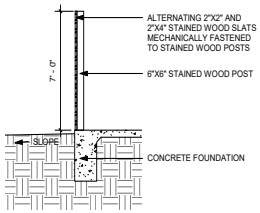

13 GABION WALL DETAIL
SCALE: 1/4" = 1'-0"

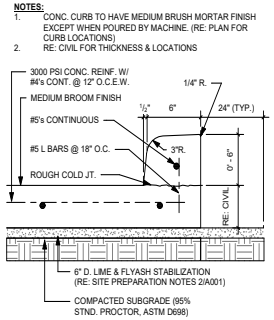

9 CURB DETAIL
SCALE: 1 1/2" = 1'-0"

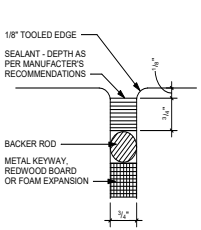

5 PAVING JOINT
SCALE: 1 1/2" = 1'-0"

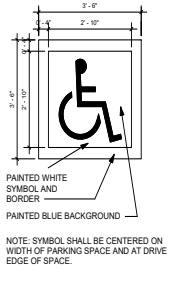

NOTE: SYMBOL SHALL BE CENTERED ON WIDTH OF PARKING SPACE AND AT DRIVE EDGE OF SPACE.

1 H.C. MARKING
SCALE: N.T.S.

4.1761

PROFESSIONAL SEAL

REGISTERED ARCHITECT JUSTIN E. MYERS 24840 STATE OF TEXAS
30-JAN-2020

LOGO/CONTACT

martinez ARCHITECTS

Martinez Architect, LP
900 Rockmead, Suite 250
Houston, Texas 77339
281.346.7371

DESIGN TEAM

Architectural
Martinez Architects

Civil Engineer
Maverick Engineering

Structural
Matrix Structural Engineers

M/E/P/T
DBR

Landscape Architect
KDC Associates

FIRE STATION #5

CITY OF MIDLAND
2210 W GOLF COURSE RD
MIDLAND, TX 79701

PROJECT No: MA 18017
DATE: 16-JAN-2020

ISSUE

75% CONSTRUCTION DOCUMENT 26-JUN-2019

100% ISSUE FOR PERMIT 30-JUL-2019

100% ISSUE FOR BID 30-JAN-2020

SITE DETAILS

A 102

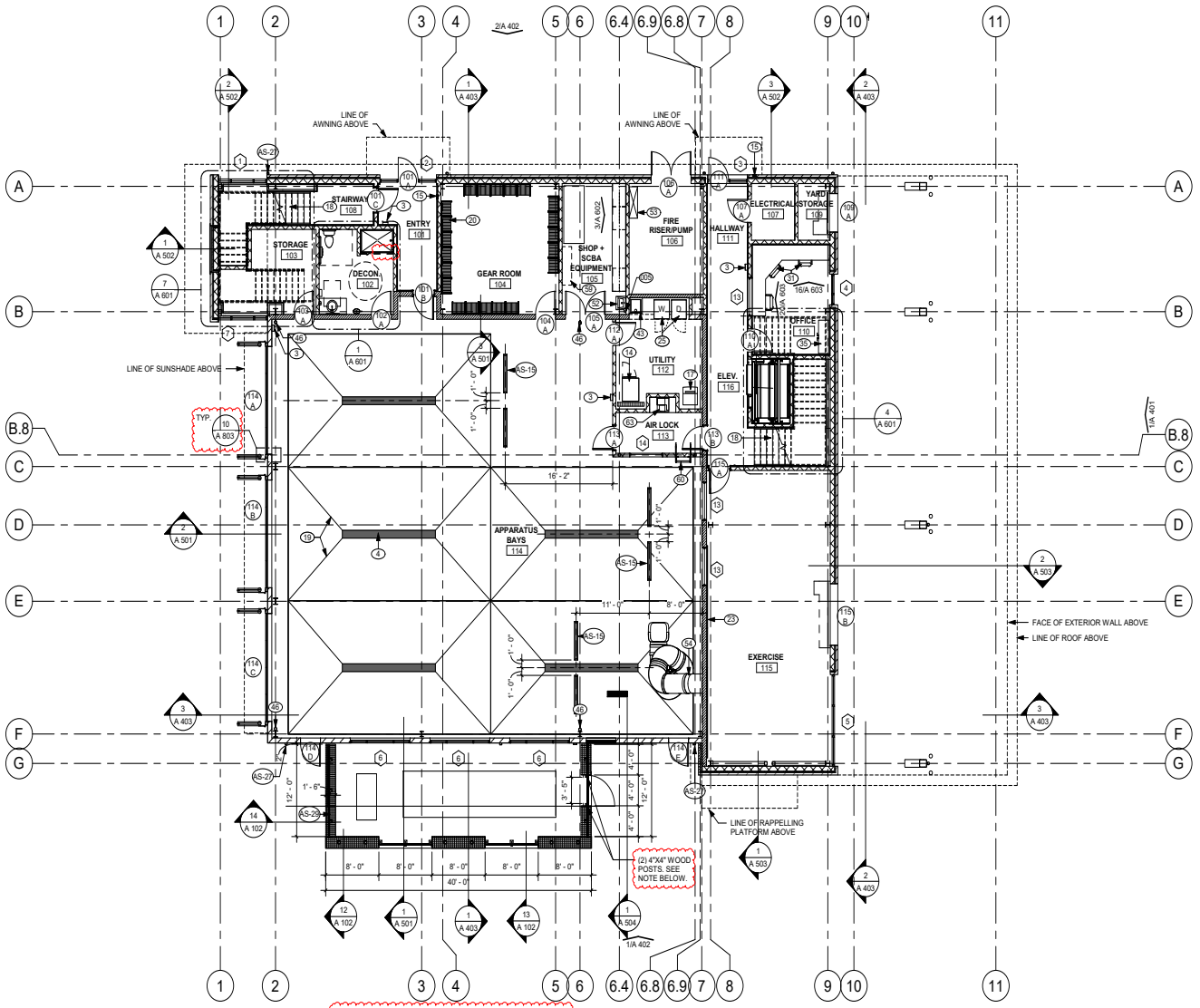

GATE @ GABION WALL NOTE:

1. KEY OPERATED LOCKING GATE LATCH.
2. GATE TO BE MADE WITH A GALVANIZED FRAME AND HINGES.
3. WOOD SLATS ON FRAME TO BE MADE OF ALTERNATING 2"X2" AND 2"X4" STAINED WOOD SLATS. MATCH SLATS ON EITHER SIDES OF GATE.

GENERAL NOTES

A. SEE SHEET A204 FOR PARTITION TYPES.
B. BRACE ALL STUD WALLS BACK TO STRUCTURE AS REQ'D. STUD MANUFACTURER SHALL GAUGE ALL STUDS PER APPLICATION. SUBMIT ENGINEERED SHOP DRAWINGS FOR APPROVAL.
C. EXTEND & SEAL ALL FIRE RATED WALLS TO DECK. ENSURE AIR-TIGHT SEAL @ ALL EXTERIOR WALLS.
D. COMPLETELY FILL ALL EXTERIOR WALLS WITH INSULATION.
E. CONTRACTOR TO PROVIDE & INSTALL FIRE DEPARTMENT ACCESS BOX. COORDINATE BOX REQUIREMENTS AND MOUNTING LOCATION WITH FIRE MARSHAL PRIOR TO INSTALLATION. APPLICATION & APPROVAL REQ'D.
F. PROVIDE GROMMETS AT ALL CASEWORK KNEE SPACES.
G. ALL MATERIALS TESTING BY ALLOWANCE.
H. TESTING AND BALANCING OF MECHANICAL SYSTEMS SHALL BE PART OF BASE BID.
I. ALL BASE CABINET FILE DRAWERS TO BE CONSTRUCTED WITH PROPER WIDTH/DEPTH SO AS TO HOUSE FILING SYSTEM WITH SIDE RAILS TO ACCEPT HANGING FILE SYSTEM. SUBMIT DRAWER MOCKUP FOR ARCHITECT'S REVIEW AND APPROVAL PRIOR TO CONSTRUCTION/ INSTALLATION.
J. SUBSTITUTE DUROCK CEMENT BOARD FOR GYPSUM BOARD @ ALL CERAMIC WALL TILE LOCATIONS.
K. 60" H. PLASTIC CORNER GUARDS TO BE PROVIDED AT ALL GYP. BD. CORNERS EXCEPT THOSE AT COLUMN FURROUTS.
L. CONTRACTOR SHALL COORDINATE THE LOCATION OF ALL ELECTRICAL DEVICES & PLUMBING WITH MILLWORK, LOCKERS, ETC. ALL ELECTRICAL DEVICES & PLUMBING NOT COORDINATED WITH MILLWORK, LOCKERS, ETC. SHALL BE RELOCATED BY THE CONTRACTOR.
M. REFER TO SHEET G001 FOR TYPICAL CLEARANCES AT DOORS. ALL DOORS SHALL MEET THE REQUIREMENTS OF THIS DRAWING. IF A DOOR IS FOUND THAT DOES NOT MEET THESE REQUIREMENTS, CONTACT THE ARCHITECT PRIOR TO CONSTRUCTION.
N. PROVIDE WOOD BLOCKING IN WALLS AS REQUIRED AT ALL HANDRAILS, MILLWORK, EQUIPMENT, ETC. - VERIFY LOCATION OF ALL OWNER PROVIDED EQUIPMENT THAT WILL REQUIRE BLOCKING.
O. SLOPE AT FLOOR DRAINS SHALL NOT EXCEED 1:48 SLOPE IN AREAS OF ACCESSIBLE PATH OF TRAVEL.

WALL LEGEND

1-HR FIRE RATED WALL TO DECK - SEALED: RE TO G002

FLOOR PLAN KEYED NOTES

3	FIRE EXTINGUISHER IN CABINET AT DRYWALL LOCATIONS, AND SURFACE MOUNTED AT CMU LOCATIONS
4	TRENCH DRAIN (RE: PLUMBING)
005	WALL-MOUNTED LIQUID SOAP DISPENSER
14	DEXTER T-600 WASHER
15	CALLBOX
17	ICE MACHINE BY OWNER G.C. TO INSTALL
18	METAL STAIR
19	SLOPED CONC. FLOOR RE: STRUCT
20	WALL MOUNTED GEAR GRID LOCKERS
23	4' HIGH X FULL LENGTH WALL MIRROR @ 30" A.F.F.
25	COMMERCIAL WASHER/ DRYER BY OWNER G.C. INSTALL
31	OFFICE FURNITURE (O.F.C.I.). CONTRACTOR TO COORDINATE AND PROVIDE BLOCKING IN WALL AS REQUIRED TO ADEQUATELY SUPPORT FURNITURE
35	MEDICAL CABINET & SHELVING (RE: 18/A602)
43	MOP SINK. RE: PLUMBING
46	ROPE HOOK
52	WALL-MOUNTED SINK
53	REVERSE-OSMOSIS
54	COMMERCIAL SLIDE
59	TANK STORAGE
60	FOLDING INCLINED LADDER
63	PRINTER (OWNER PROVIDED AND INSTALLED)
AS-15	CONCRETE WHEEL STOP RE: 2/A102
AS-27	PRE FIN. MTL DOWNSPOUT
AS-29	GABION WALL & STAINED CEDAR FENCE ENCLOSURE

TRUE NORTH | PROJECT NORTH

1 LEVEL 1
SCALE: 1/8" = 1'-0"

PROFESSIONAL SEAL

REGISTERED ARCHITECT JUSTIN E. MYERS 24840 STATE OF TEXAS

10-JAN-2020

LOGO/CONTACT

martinez ARCHITECTS

Martinez Architect, LP
900 Rockmead, Suite 250
Houston, Texas 77339
281.346.7371

DESIGN TEAM

Architectural
Martinez Architects

Civil Engineer
Maverick Engineering

Structural
Matrix Structural Engineers

M/E/P/T
DBR

Landscape Architect
KDC Associates

FIRE STATION #5

CITY OF MIDLAND
2210 W GOLF COURSE RD
MIDLAND, TX 79701

PROJECT No: MA 18017
DATE: 16-JAN-2020

ISSUE

75% CONSTRUCTION DOCUMENT 26-JUN-2019
100% ISSUE FOR PERMIT 30-JUL-2019
100% ISSUE FOR BID 30-JAN-2020

FIRST FLOOR PLAN

A 201

4.1762

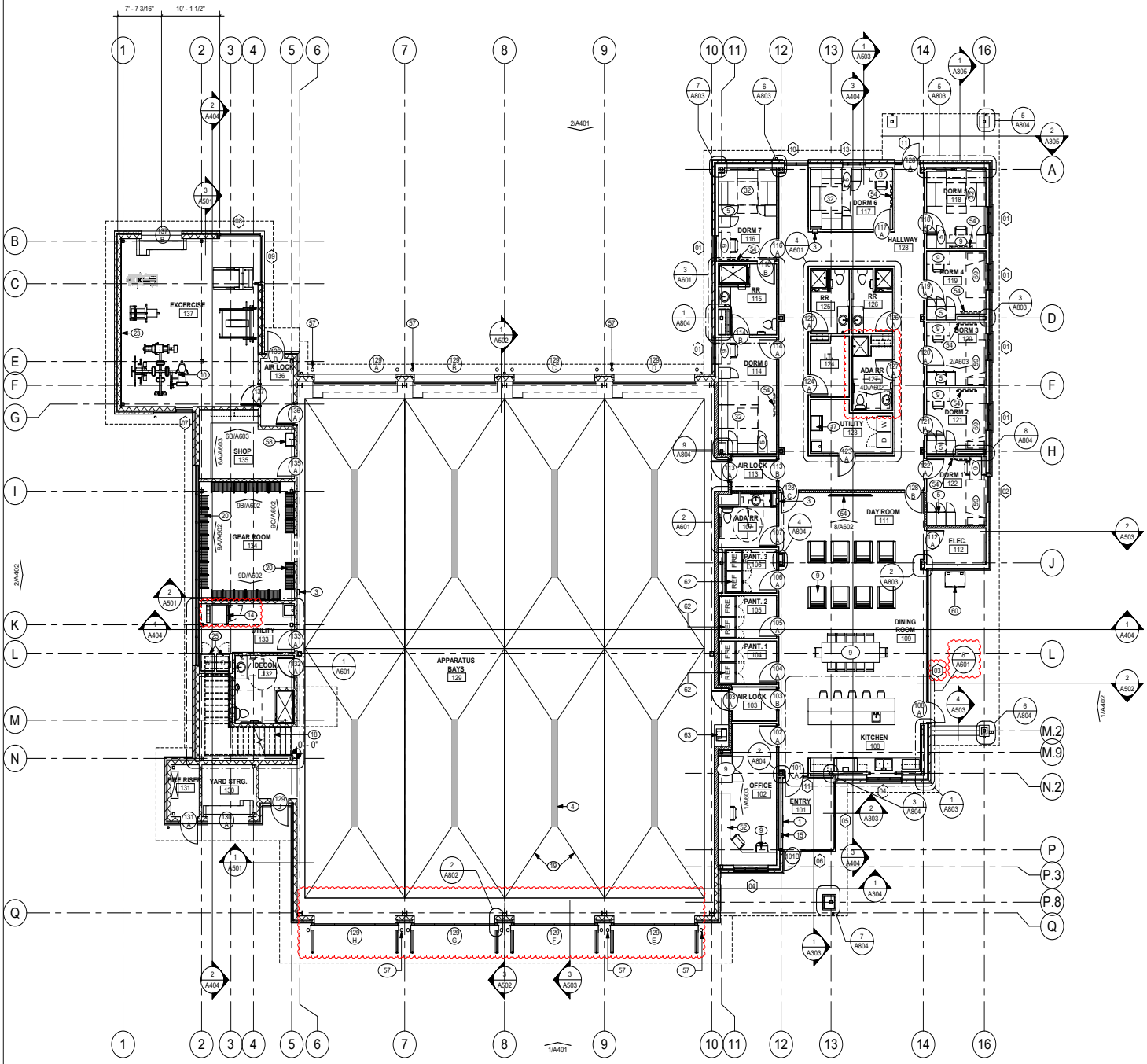

01 LEVEL 1
SCALE: 1/8" = 1'-0"

TRUE NORTH
PROJECT NORTH

GENERAL NOTES

A. SEE SHEET A205 FOR PARTITION TYPES.
B. BRACE ALL STUD WALLS BACK TO STRUCTURE AS REQ'D. STUD MANUFACTURER SHALL GAUGE ALL STUDS PER APPLICATION. SUBMIT ENGINEERED SHOP DRAWINGS FOR APPROVAL.
C. EXTEND & SEAL ALL FIRE RATED WALLS TO DECK. ENSURE AIR-TIGHT SEAL @ ALL EXTERIOR WALLS.
D. COMPLETELY FILL ALL EXTERIOR WALLS WITH INSULATION.
E. CONTRACTOR TO PROVIDE & INSTALL FIRE DEPARTMENT ACCESS BOX. COORDINATE BOX REQUIREMENTS AND MOUNTING LOCATION WITH FIRE MARSHAL PRIOR TO INSTALLATION. APPLICATION & APPROVAL REQ'D.
F. PROVIDE GROMMETS AT ALL CASEWORK KNEE SPACES.
G. ALL MATERIALS TESTING BY OWNER.
H. TESTING AND BALANCING OF MECHANICAL SYSTEMS SHALL BE PART OF BASE BID.
I. ALL BASE CABINET FILE DRAWERS TO BE CONSTRUCTED WITH PROPER WIDTH/DEPTH SO AS TO HOUSE FILING SYSTEM WITH SIDE RAILS TO ACCEPT HANGING FILE SYSTEM. SUBMIT DRAWER MOCKUP FOR ARCHITECT'S REVIEW AND APPROVAL PRIOR TO CONSTRUCTION/ INSTALLATION.
J. SUBSTITUTE DUROCK CEMENT BOARD FOR GYPSUM BOARD @ ALL CERAMIC WALL TILE LOCATIONS.
K. 60" H. PLASTIC CORNER GUARDS TO BE PROVIDED AT ALL GYP. BD. CORNERS EXCEPT THOSE AT COLUMN FURROUTS.
L. CONTRACTOR SHALL COORDINATE THE LOCATION OF ALL ELECTRICAL DEVICES & PLUMBING WITH MILLWORK, LOCKERS, ETC. ALL ELECTRICAL DEVICES & PLUMBING NOT COORDINATED WITH MILLWORK, LOCKERS, ETC. SHALL BE RELOCATED BY THE CONTRACTOR.
M. REFER TO SHEET G001 FOR TYPICAL CLEARANCES AT DOORS. ALL DOORS SHALL MEET THE REQUIREMENTS OF THIS DRAWING. IF A DOOR IS FOUND THAT DOES NOT MEET THESE REQUIREMENTS, CONTACT THE ARCHITECT PRIOR TO CONSTRUCTION.
N. PROVIDE WOOD BLOCKING IN WALLS AS REQUIRED AT ALL HANDRAILS, MILLWORK, EQUIPMENT, ETC. - VERIFY LOCATION OF ALL OWNER PROVIDED EQUIPMENT THAT WILL REQUIRE BLOCKING.
O. SLOPE AT FLOOR DRAINS SHALL NOT EXCEED 1:48 SLOPE IN AREAS OF ACCESSIBLE PATH OF TRAVEL.

WALL LEGEND

1-HR FIRE RATED WALL TO DECK - SEALED: RE TO G002

FLOOR PLAN KEYED NOTES

1 DEDICATION PLAQUE - RE 4/A905
3 FIRE EXTINGUISHER IN CABINET AT DRYWALL LOCATIONS, AND SURFACE MOUNTED AT CMU LOCATIONS
4 TRENCH DRAIN (RE: PLUMBING)
5 1-TIER P-LAM STORAGE LOCKERS (TYP. OF (3) @ EA. DORM ROOM)
9 FURNISHINGS BY OWNER
10 EXERCISE EQUIPMENT BY OWNER
14 65 LB UNIMAC EXTRACTOR BY OWNER VENDOR
15 CALLBOX SHALL PERMIT CALLING THE STATION PHONE OR DIALING 9-1-1
17 ICE MACHINE BY OWNER G.C. TO INSTALL
18 STEEL STAIR w/ CONCRETE TREADS
19 SLOPED CONC. FLOOR RE: STRUCT
20 WALL MOUNTED FULL-HEIGHT GEARGRID LOCKERS (24)
23 4' HIGH X FULL LENGTH WALL MIRROR @ 30" A.F.F.
25 RESIDENTIAL WASHER/ DRYER BY OWNER G.C. INSTALL
32 WALL MOUNTED MURPHY BED (3 IN ROOM) (O.F.C.I.). CONTRACTOR TO VERIFY SIZE REQUIREMENTS OF BED w/ OWNER PRIOR TO INSTALLATION.
52 BUILT-IN-DESK, SEE ELEVATIONS
54 TV BY OWNER (PROVIDE BLOCKING). COORDINATE TV MOUNT REQUIREMENTS WITH OWNER OR PROVIDE SOLID PLYWOOD SHEATHING BLOCKING"
57 CONCRETE-FILLED STEEL PIPE BOLLARDS - RE: 6/A102
58 SERVICE SINK (RE: PLUMBING)
59 TWIN LX BED WITH UNDER-BED STORAGE
60 GAS GRILL (O.F.C.I.). PROVIDE NATURAL GAS LINE HOOK-UP
62 REFRIGERATOR AND FREEZER BY OWNER.
63 PRINTER AND TABLE BY OWNER.

PROFESSIONAL SEAL
REGISTERED ARCHITECT JUSTIN E. MARTINEZ 24640 STATE OF TEXAS
JAN 16, 2020

LOGO/CONTACT
martinez ARCHITECTURE
Martinez Architect, LP
900 Rockmead, Suite 250
Houston, Texas 77339
281.346.7371

DESIGN TEAM
Architectural
Martinez Architects
Civil Engineer
Maverick Engineering
Structural
Matrix Structural engineers
M/E/P/T
DBR
Landscape Architect
KDC Associates

FIRE STATION #11
CITY OF MIDLAND
6600 BRIARWOOD AVE
MIDLAND, TX 79707

PROJECT No: MA 18017
DATE: 16-JAN-2020

ISSUE
100% DESIGN DEVELOPMENT 22-MAY-2019
75% CONSTRUCTION DOCUMENT 26-JUN-2019
100% ISSUE FOR PERMIT 30-JUL-2019
100% ISSUE FOR BIDDING 30-JAN-2020

LEVEL 1 - FIRE STATION

A201

4.1763

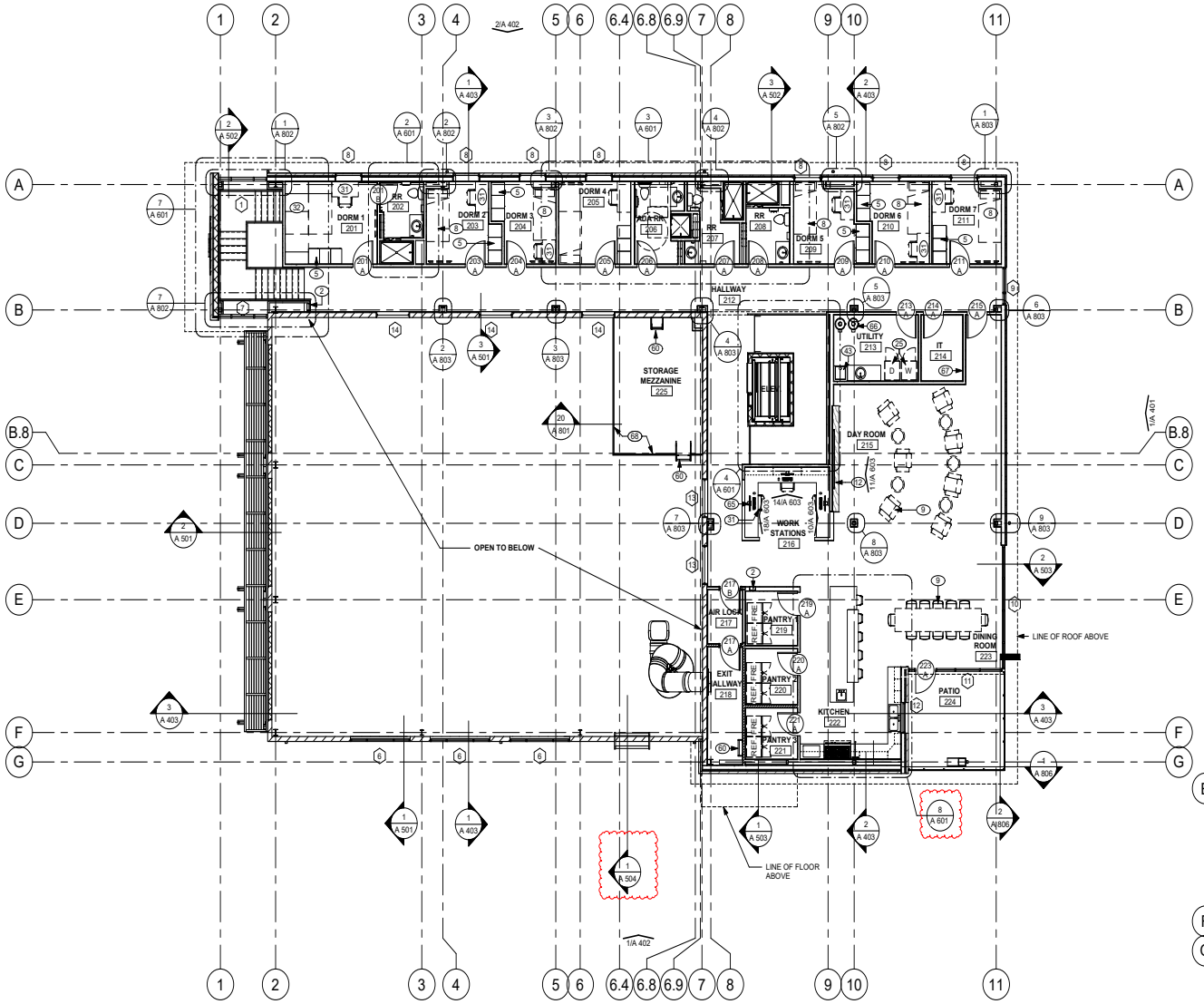

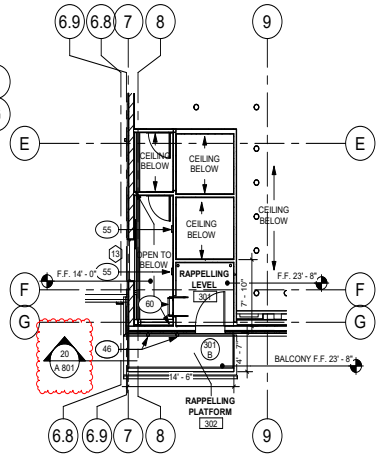

GENERAL NOTES

A. SEE SHEET A204 FOR PARTITION TYPES.
B. BRACE ALL STUD WALLS BACK TO STRUCTURE AS REQ'D. STUD MANUFACTURER SHALL GAUGE ALL STUDS PER APPLICATION. SUBMIT ENGINEERED SHOP DRAWINGS FOR APPROVAL.
C. EXTEND & SEAL ALL FIRE RATED WALLS TO DECK. ENSURE AIR-TIGHT SEAL @ ALL EXTERIOR WALLS.
D. COMPLETELY FILL ALL EXTERIOR WALLS WITH INSULATION.
E. CONTRACTOR TO PROVIDE & INSTALL FIRE DEPARTMENT ACCESS BOX. COORDINATE BOX REQUIREMENTS AND MOUNTING LOCATION WITH FIRE MARSHAL PRIOR TO INSTALLATION. APPLICATION & APPROVAL REQ'D.
F. PROVIDE GROMMETS AT ALL CASEWORK KNEE SPACES.
G. ALL MATERIALS TESTING BY ALLOWANCE.
H. TESTING AND BALANCING OF MECHANICAL SYSTEMS SHALL BE PART OF BASE BID.
I. ALL BASE CABINET FILE DRAWERS TO BE CONSTRUCTED WITH PROPER WIDTH/DEPTH SO AS TO HOUSE FILING SYSTEM WITH SIDE RAILS TO ACCEPT HANGING FILE SYSTEM. SUBMIT DRAWER MOCKUP FOR ARCHITECT'S REVIEW AND APPROVAL PRIOR TO CONSTRUCTION/ INSTALLATION.
J. SUBSTITUTE DUROCK CEMENT BOARD FOR GYPSUM BOARD @ ALL CERAMIC WALL TILE LOCATIONS.
K. 60" H. PLASTIC CORNER GUARDS TO BE PROVIDED AT ALL GYP. BD. CORNERS EXCEPT THOSE AT COLUMN FURROUTS.
L. CONTRACTOR SHALL COORDINATE THE LOCATION OF ALL ELECTRICAL DEVICES & PLUMBING WITH MILLWORK, LOCKERS, ETC. ALL ELECTRICAL DEVICES & PLUMBING NOT COORDINATED WITH MILLWORK, LOCKERS, ETC. SHALL BE RELOCATED BY THE CONTRACTOR.
M. REFER TO SHEET G001 FOR TYPICAL CLEARANCES AT DOORS. ALL DOORS SHALL MEET THE REQUIREMENTS OF THIS DRAWING. IF A DOOR IS FOUND THAT DOES NOT MEET THESE REQUIREMENTS, CONTACT THE ARCHITECT PRIOR TO CONSTRUCTION.
N. PROVIDE WOOD BLOCKING IN WALLS AS REQUIRED AT ALL HANDRAILS, MILLWORK, EQUIPMENT, ETC. - VERIFY LOCATION OF ALL OWNER PROVIDED EQUIPMENT THAT WILL REQUIRE BLOCKING.
O. SLOPE AT FLOOR DRAINS SHALL NOT EXCEED 1:48 SLOPE IN AREAS OF ACCESSIBLE PATH OF TRAVEL.

WALL LEGEND

1-HR FIRE RATED WALL TO DECK - SEALED: RE TO G002

FLOOR PLAN KEYED NOTES

#	
2	FIRE EXTINGUISHER IN CABINET AT DRYWALL LOCATIONS, AND SURFACE MOUNTED AT METAL LINER PANELS LOCATIONS
5	1-TIER P-LAM STORAGE LOCKERS
8	EXTRA LENGTH MURPHY BED (O.F.C.I.). CONTRACTOR TO VERIFY SIZE REQUIREMENTS OF BED w/ OWNER PRIOR TO INSTALLATION. CONTRACTOR SHALL ENSURE THAT BED INSTALLATION PROVIDES FLUSH TRANSITION BETWEEN BED AND ADJACENT WALL WHEN BED IS IN FOLDED POSITION
9	FURNISHINGS (O.F.C.I.)
12	PROVIDE BLOCKING FOR OWNER-FURNISHED T.V. (COORD. MOUNTING HGT. WITH ARCHITECT PRIOR TO INSTALLATION)
25	COMMERCIAL WASHER/ DRYER BY OWNER G.C. INSTALL
31	OFFICE FURNITURE (O.F.C.I.). CONTRACTOR TO COORDINATE AND PROVIDE BLOCKING IN WALL AS REQUIRED TO ADEQUATELY SUPPORT FURNITURE
32	MURPHY BED (O.F.C.I.). CONTRACTOR TO VERIFY SIZE REQUIREMENTS OF BED w/ OWNER PRIOR TO INSTALLATION.
43	MOP SINK. RE: PLUMBING
46	ROPE HOOK
55	WALL SCONCE
60	FIXED LADDER @ RAPPELLING; FOLDING INCLINED LADDERS @ MEZZANINE
65	COMPUTER EQUIPMENT (O.F.C.I.) RE: TECHELECT.
66	WATER HEATER. RE: MEP
67	INSTALL PAINTED PLYWOOD ON WALLS. RE: MEPT
68	42" STEEL, PAINTED GUARDRAIL

2 LEVEL 2
SCALE: 1/8" = 1'-0"

1 RAPPELLING LEVEL
SCALE: 1/8" = 1'-0"

TRUE NORTH PROJECT NORTH

PROFESSIONAL SEAL

REGISTERED ARCHITECT JUSTIN E. MYERS 24840 STATE OF TEXAS
10-JAN-2020

LOGO/CONTACT

martinez ARCHITECTS

Martinez Architect, LP
900 Rockmead, Suite 250
Houston, Texas 77339
281.346.7371

DESIGN TEAM

Architectural
Martinez Architects

Civil Engineer
Maverick Engineering

Structural
Matrix Structural Engineers

MEP/FP/T
DBR

Landscape Architect
KDC Associates

FIRE STATION #5
CITY OF MIDLAND
2210 W GOLF COURSE RD
MIDLAND, TX 79701

PROJECT No: **MA 18017**
DATE: **16-JAN-2020**

ISSUE
75% CONSTRUCTION DOCUMENT 26-JUN-2019
100% ISSUE FOR PERMIT 30-JUL-2019
100% ISSUE FOR BID 30-JAN-2020

SECOND FLOOR PLAN

A 202

4.1764

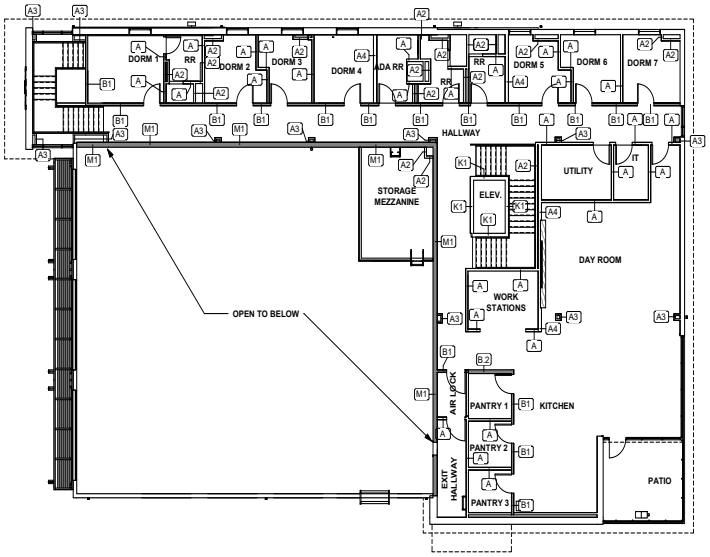

2 LEVEL 2 - PARTITION TYPES
SCALE: 3/32" = 1'-0"

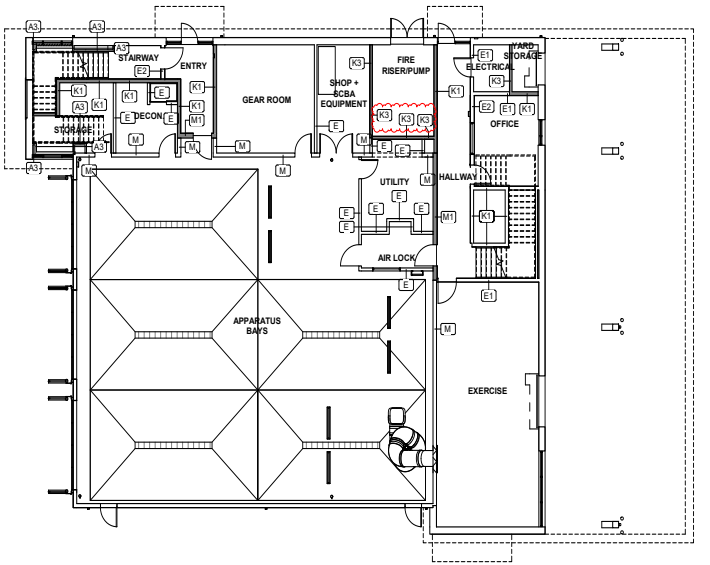

TRUE NORTH N
PROJECT NORTH N

1 LEVEL 1 - PARTITION TYPE PLAN
SCALE: 3/32" = 1'-0"

4.1765

PROFESSIONAL SEAL

REGISTERED ARCHITECT JUSTIN E. MYERS 24640 STATE OF TEXAS
10-JAN-2020

LOGO/CONTACT

martinez ARCHITECTS

Martinez Architect, LP
900 Rockmead, Suite 250
Houston, Texas 77339
281.346.7371

DESIGN TEAM

Architectural
Martinez Architects

Civil Engineer
Maverick Engineering

Structural
Matrix Structural Engineers

M/E/P/T
DBR

Landscape Architect
KDC Associates

FIRE STATION #5

CITY OF MIDLAND
2210 W GOLF COURSE RD
MIDLAND, TX 79701

PROJECT No: MA 18017
DATE: 16-JAN-2020

ISSUE

75% CONSTRUCTION DOCUMENT 26-JUN-2019
100% ISSUE FOR PERMIT 30-JUL-2019
100% ISSUE FOR BID 30-JAN-2020

LEVEL 1 + 2
PARTITION TYPES

A 205

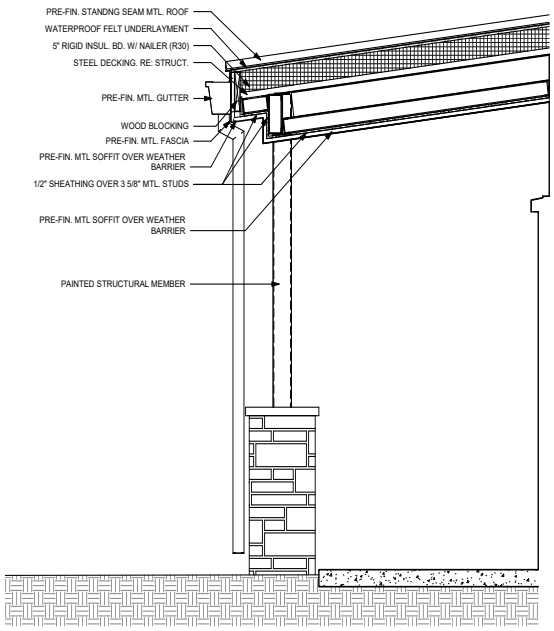

1 WALL/ ROOF SECTION
SCALE: 3/4" = 1'-0"

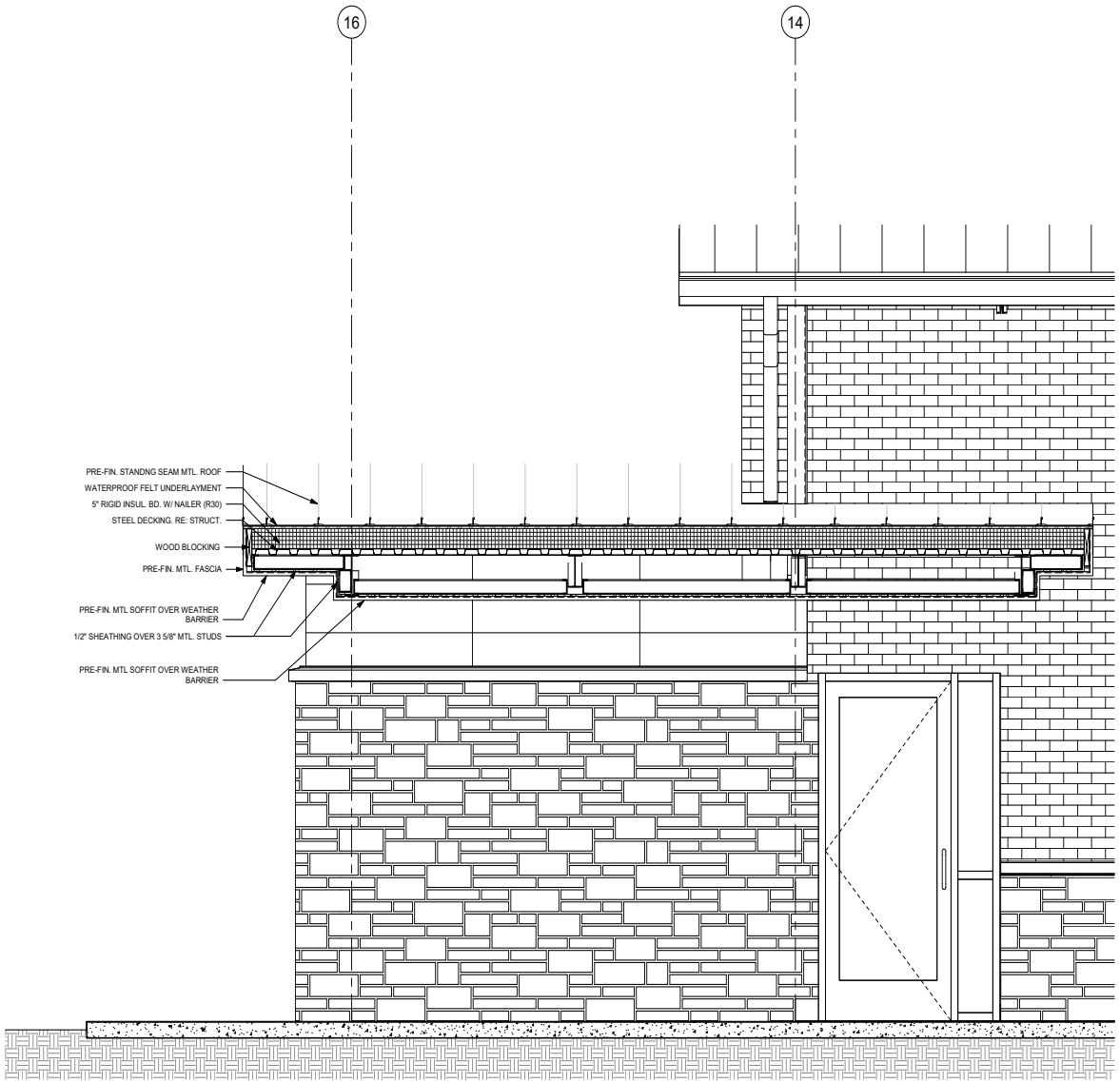

2 WALL/ ROOF SECTION
SCALE: 3/4" = 1'-0"

4.1766

PROFESSIONAL SEAL

REGISTERED ARCHITECT
JUSTIN E. MYERS
24640
STATE OF TEXAS
JAN. 16, 2020

LOGO/CONTACT

martinez ARCHITECTS

Martinez Architect, LP
900 Rockmead, Suite 250
Houston, Texas 77339
281.346.7371

DESIGN TEAM

Architectural
Martinez Architects

Civil Engineer
Maverick Engineering

Structural
Matrix Structural engineers

M/E/P/T
DBR

Landscape Architect
KDC Associates

FIRE STATION #11

CITY OF MIDLAND
6600 BRIARWOOD AVE
MIDLAND, TX 79707

PROJECT No: **MA 18017**
DATE: **16-JAN-2020**

ISSUE

100% DESIGN DEVELOPMENT
22-MAY-2019

75% CONSTRUCTION DOCUMENT
26-JUN-2019

100% ISSUE FOR PERMIT
30-JUL-2019

100% ISSUE FOR BIDDING
30-JAN-2020

ROOF DETAILS

A305

GENERAL EXTERIOR ELEVATION NOTES

A. G.C. SHALL PROVIDE WIND LOAD CERTIFICATION FROM REGISTERED ENGINEER UPON COMPLETION OF PROJECT. ENGINEER TO CERTIFY 150 MPH FOR ALL COMPONENTS OF BUILDING INCLUDING BUT NOT LIMITED TO THE FOUNDATION, WALLS, DOORS, FRAMES, WINDOWS, AND ROOF.
B. G.C. TO COORDINATE ALL LOUVERS, VENTS AND OTHER PENETRATIONS WITH ARCHITECT PRIOR TO INSTALLATION.
C. G.C. TO PERFORM SMOKE TEST, SEAL ALL PENETRATION INDICATED BY RESULTS - COORDINATE WITH ARCHITECT/OWNER
D. TIE ALL DOWNSPOUTS TO UNDERGROUND STORM SYSTEM (RE: PLUMBING AND CIVIL)
E. SIGNAGE SUBCONTRACTOR SHALL BE RESPONSIBLE TO SECURE SEPARATE PERMIT FOR ALL SIGNAGE.

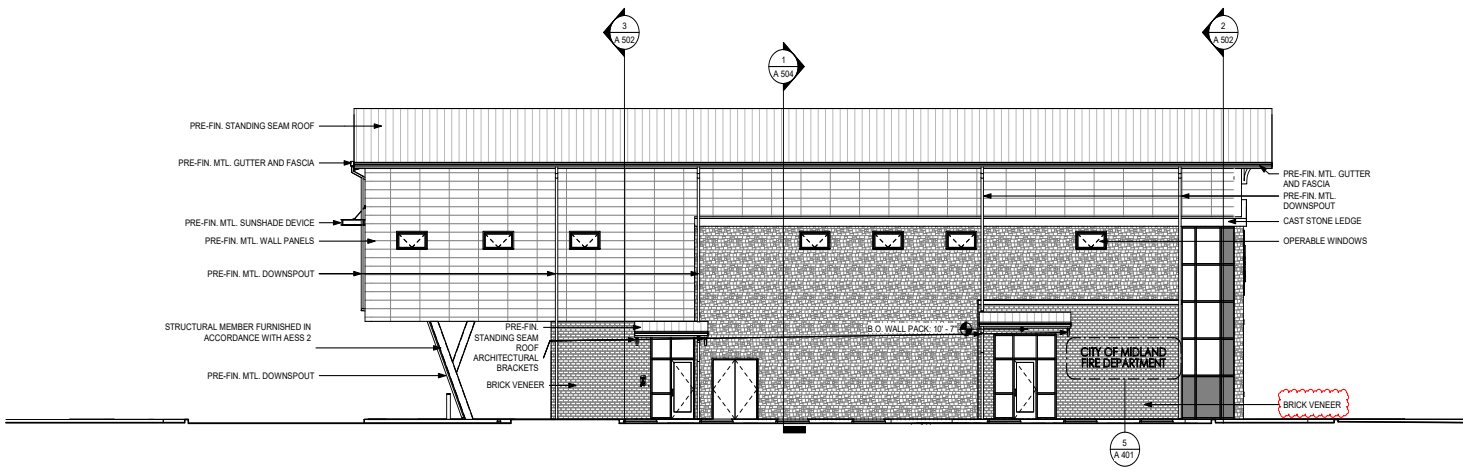

2 NORTH ELEVATION
SCALE: 1/8" = 1'-0"

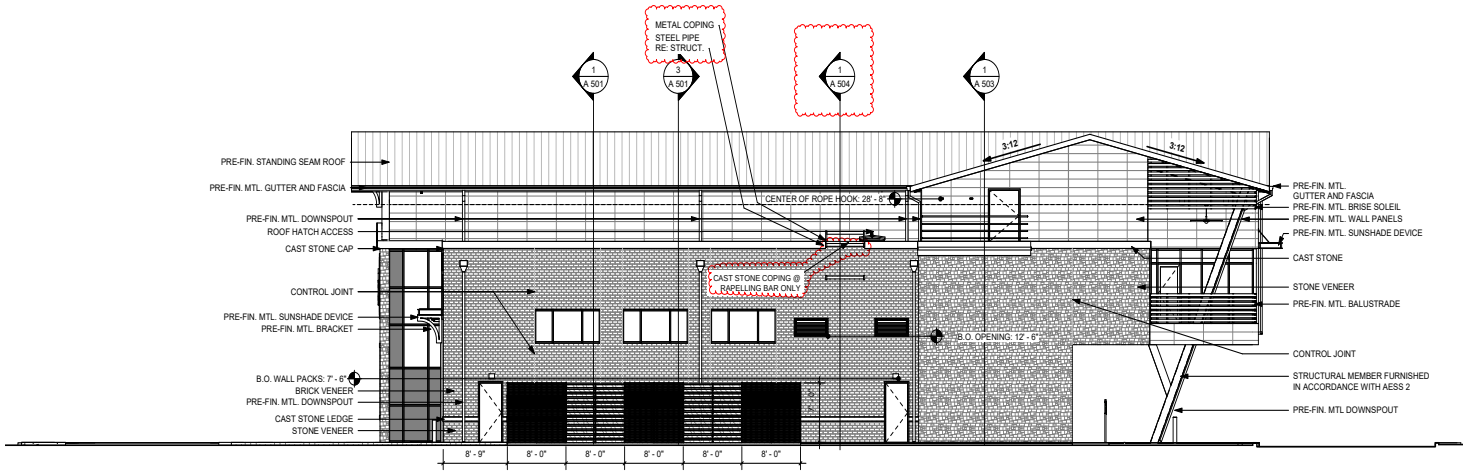

1 SOUTH ELEVATION
SCALE: 1/8" = 1'-0"

PROFESSIONAL SEAL

REGISTERED ARCHITECT JUSTIN E. MYERS 24840 STATE OF TEXAS
30-JAN-2020

LOGO/CONTACT

martinez ARCHITECTS

Martinez Architect, LP
900 Rockmead, Suite 250
Houston, Texas 77339
281.346.7371

DESIGN TEAM

Architectural
Martinez Architects

Civil Engineer
Maverick Engineering

Structural
Matrix Structural Engineers

M/E/P/T
DBR

Landscape Architect
KDC Associates

FIRE STATION #5

CITY OF MIDLAND
2210 W GOLF COURSE RD
MIDLAND, TX 79701

PROJECT No: **MA 18017**
DATE: **16-JAN-2020**

ISSUE

75% CONSTRUCTION DOCUMENT 26-JUN-2019
100% ISSUE FOR PERMIT 30-JUL-2019
100% ISSUE FOR BID 30-JAN-2020

EXTERIOR ELEVATIONS

A 402

4.1767

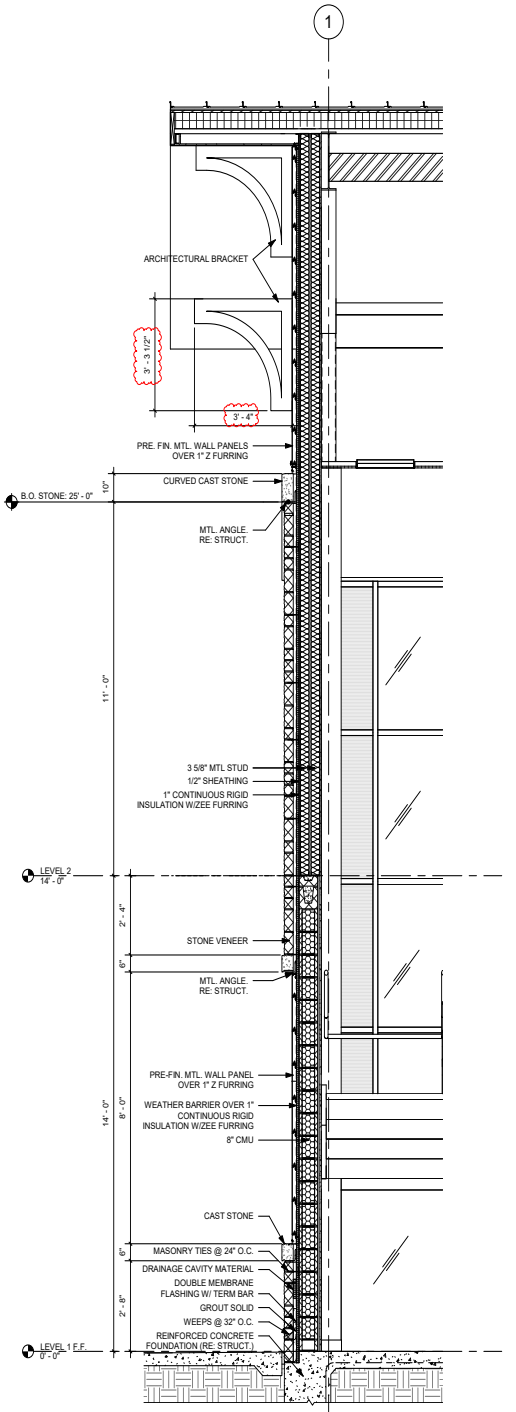

1 WALL SECTION
SCALE: 1/2" = 1'-0"

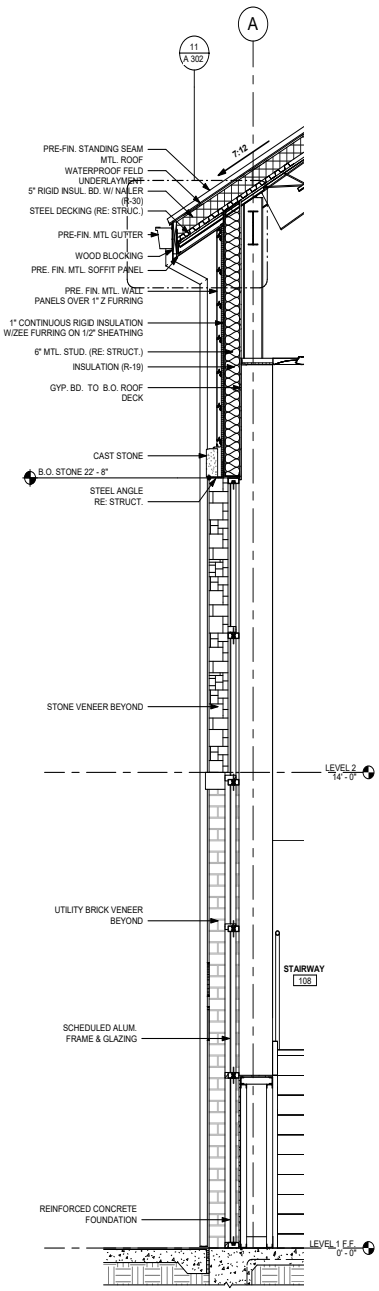

2 WALL SECTION
SCALE: 1/2" = 1'-0"

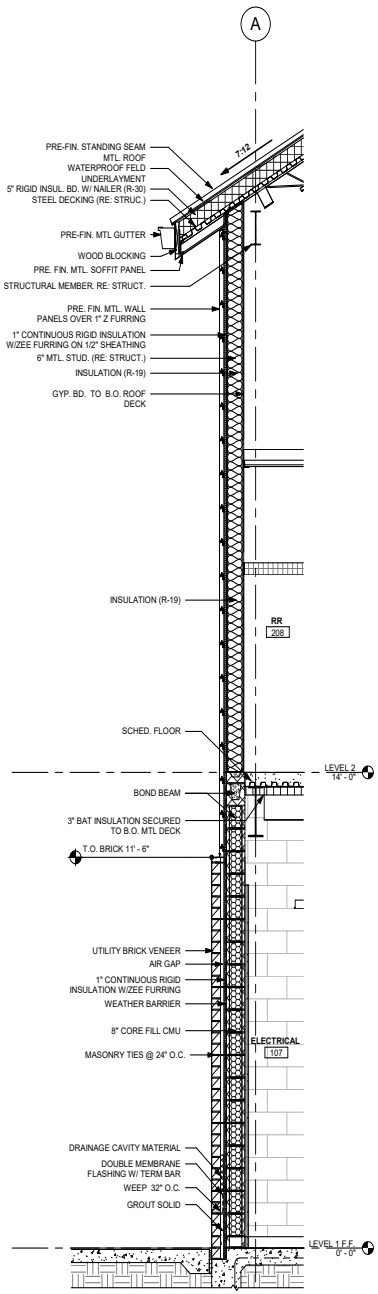

3 WALL SECTION
SCALE: 1/2" = 1'-0"

4.1768

PROFESSIONAL SEAL

REGISTERED ARCHITECT JUSTIN E. MYERS 24840 STATE OF TEXAS
30-JAN-2020

LOGO/CONTACT

martinez ARCHITECTS

Martinez Architect, LP
900 Rockmead, Suite 250
Houston, Texas 77339
281.346.7371

DESIGN TEAM

Architectural
Martinez Architects

Civil Engineer
Maverick Engineering

Structural
Matrix Structural Engineers

MIE/P/T
DBR

Landscape Architect
KDC Associates

FIRE STATION #5

CITY OF MIDLAND
2210 W GOLF COURSE RD
MIDLAND, TX 79701

PROJECT No: MA 18017
DATE: 16-JAN-2020

ISSUE

75% CONSTRUCTION DOCUMENT
26-JUN-2019

100% ISSUE FOR PERMIT
30-JUL-2019

100% ISSUE FOR BID
30-JAN-2020

WALL SECTIONS

A 502

ENLARGED PLAN GENERAL NOTES

A. INSTALL CURBS AT NON-ACCESSIBLE SHOWERS.
B. INSTALL ALL PLUMBING ACCESS PANELS NOT TO CONFLICT W/ TOILET ACCESSORIES.
C. COORDINATE ALL TOILET ACCESSORIES AND INSTALLATION w/ ARCHITECT/OWNER. ALL ACCESSORIES TO HAVE TUMBLER LATCH KNOB (NO KEYED LOCKS)
D. SHEET G001 FOR TYPICAL ACCESSIBLE DIMENSIONS & MOUNTING HEIGHTS.

FLOOR PLAN KEYED NOTES

001	36" GRAB & 42" BAR w/ SLIP-RESISTANT SURFACE
003	TOILET PAPER DISPENSER (MOUNT @ 19" A.F.F.)
004	PAPER TOWEL DISPENSER
5	1-TIER P-LAM STORAGE LOCKERS
005	WALL-MOUNTED LIQUID SOAP DISPENSER
006	MIRROR - 24"W x 48"H
8	EXTRA LENGTH MURPHY BED (O.F.C.I.). CONTRACTOR TO VERIFY SIZE REQUIREMENTS OF BED w/ OWNER PRIOR TO INSTALLATION. CONTRACTOR SHALL ENSURE THAT BED INSTALLATION PROVIDES FLUSH TRANSITION BETWEEN BED AND ADJACENT WALL WHEN BED IS IN FOLDED POSITION
008	SHOWER CURTAIN, ROD & HOOKS
9	FURNISHINGS (O.F.C.I.)
009	TWO CLOTHING HOOKS
010	CONTINUOUS SHOWER GRAB BAR w/ SLIP-RESISTANT SURFACE
12	PROVIDE BLOCKING FOR OWNER-FURNISHED T.V. (COORD. MOUNTING HGT. WITH ARCHITECT PRIOR TO INSTALLATION)
13	PROVIDE REVERSE OSMOSIS SUPPLY BENEATH SINK
0027	SHOWER SHELF
31	OFFICE FURNITURE (O.F.C.I.). CONTRACTOR TO COORDINATE AND PROVIDE BLOCKING IN WALL AS REQUIRED TO ADEQUATELY SUPPORT FURNITURE
48	POT FILLER
51	48" THOR RANGE
61	MICROWAVE. PROVIDE DEDICATED CIRCUIT.
64	RANGE HOOD. RE: ELECTRICAL
69	EYE WASH STATION
70	SHOWER CURB. RE: 14A/801
71	ACCESSIBLE SHOWER THRESHOLD. RE: 13/A801

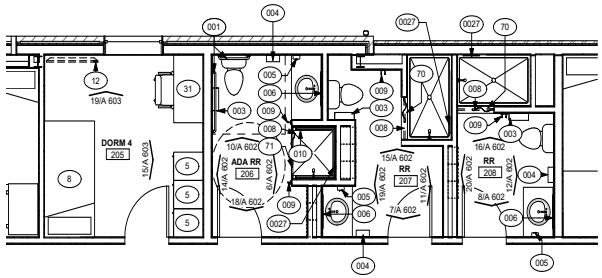

3 RESTROOMS 206, 207, 208
SCALE: 1/4" = 1'-0"

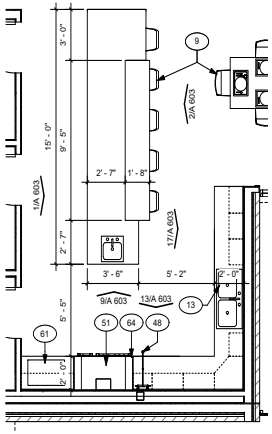

8 ENLARGED KITCHEN
SCALE: 1/4" = 1'-0"

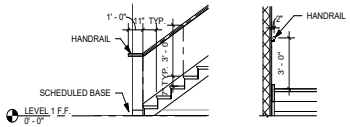

5 TYP. STAIR DETAILS
SCALE: 1/4" = 1'-0"

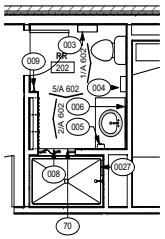

2 RESTROOM 202
SCALE: 1/4" = 1'-0"

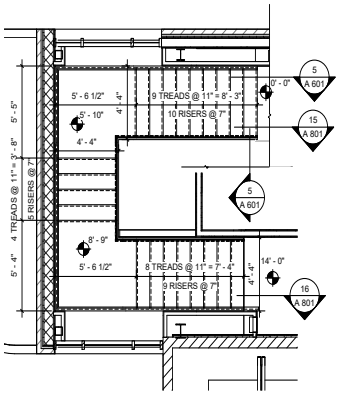

7 STAIR @ MAIN ENTRANCE
SCALE: 1/4" = 1'-0"

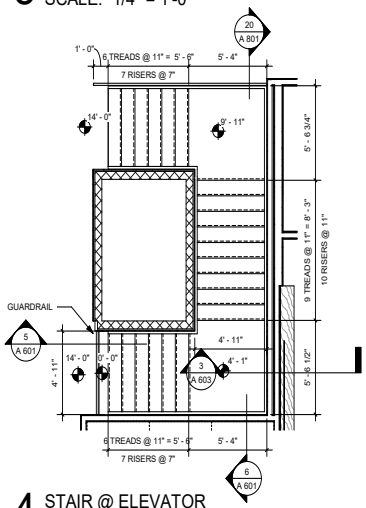

4 STAIR @ ELEVATOR
SCALE: 1/4" = 1'-0"

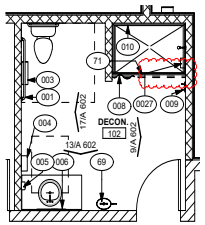

1 DECON 102
SCALE: 1/4" = 1'-0"

4.1769

PROFESSIONAL SEAL

LOGO/CONTACT

martinez ARCHITECTS

Martinez Architect, LP
900 Rockmead, Suite 250
Houston, Texas 77339
281.346.7371

DESIGN TEAM

Architectural
Martinez Architects

Civil Engineer
Maverick Engineering

Structural
Matrix Structural Engineers

MEP/T
DBR

Landscape Architect
KDC Associates

FIRE STATION #5

CITY OF MIDLAND
2210 W GOLF COURSE RD
MIDLAND, TX 79701

PROJECT No: MA 18017
DATE: 16-JAN-2020

ISSUE
75% CONSTRUCTION DOCUMENT 26-JUN-2019
100% ISSUE FOR PERMIT 30-JUL-2019
100% ISSUE FOR BID 30-JAN-2020

ENLARGED FLOOR PLANS

A 601

ENLARGED PLAN GENERAL NOTES

A. INSTALL CURBS AT NON-ACCESSIBLE SHOWERS.
B. INSTALL ALL PLUMBING ACCESS PANELS NOT TO CONFLICT W/ TOILET ACCESSORIES.
C. COORDINATE ALL TOILET ACCESSORIES AND INSTALLATION w/ ARCHITECT/OWNER. ALL ACCESSORIES TO HAVE TUMBLER LATCH KNOB (NO KEYED LOCKS)
D. SHEET G001 FOR TYPICAL ACCESSIBLE DIMENSIONS & MOUNTING HEIGHTS.

ENLARGED FLOOR PLAN KEYED NOTES (#)

001	36" & 42" GRAB BARS w/ SLIP-RESISTANT SURFACE
3	FIRE EXTINGUISHER IN CABINET AT DRYWALL LOCATIONS, AND SURFACE MOUNTED AT CMU LOCATIONS
003	TOILET PAPER DISPENSER (MOUNT @ 19" A.F.F.)
4	TRENCH DRAIN (RE: PLUMBING)
004	RECESSED PAPER TOWEL DISPENSER/RECEPTACLE
005	
006	MIRROR - 24"W x 48"H
007	RECESSED SHOWER SHELF
008	SHOWER CURTAIN, ROD & HOOKS
009	TWO CLOTHING HOOKS
010	CONTINUOUS SHOWER GRAB BAR w/ SLIP-RESISTANT SURFACE
14	65 LB UNIMAC EXTRACTOR BY OWNER VENDOR
17	ICE MACHINE BY OWNER G.C. TO INSTALL
18	STEEL STAIR w/ CONCRETE TREADS
25	RESIDENTIAL WASHER/ DRYER BY OWNER G.C. INSTALL
025	SHOWER / EYEWASH RE: PLUMB
026	BUILT-IN P-LAM STORAGE CABINETS
028	CONCRETE CURB. RE: 14/A801
029	MICROWAVE. RE: ELEC.
030	ACCESSIBLE SHOWER THRESHOLD. RE: 13/A801
43	MOP SINK. RE: PLUMBING
47	OVEN/RANGE/HOOD (O.F.C.I.)
48	BAR STOOL
61	PAINT STRUCTURAL COLUMNS. (TYP.)

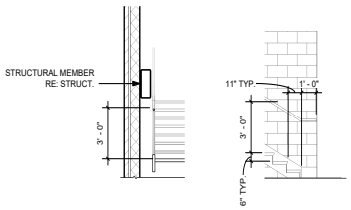

6 STAIR DETAILS
SCALE: 1/4" = 1'-0"

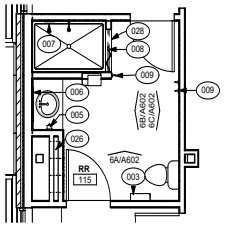

3 RESTROOM 115
SCALE: 1/4" = 1'-0"

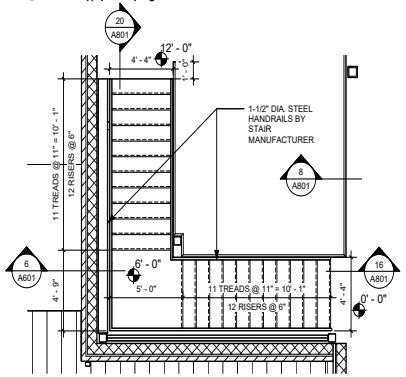

5 STAIR
SCALE: 1/4" = 1'-0"

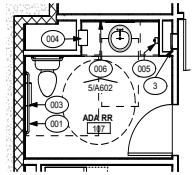

2 RESTROOM 107
SCALE: 1/4" = 1'-0"

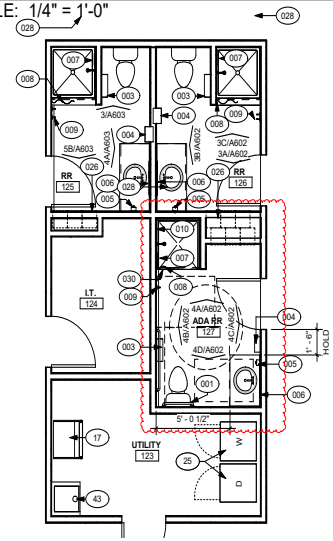

4 UTILITY/RESTROOM CORE
SCALE: 1/4" = 1'-0"

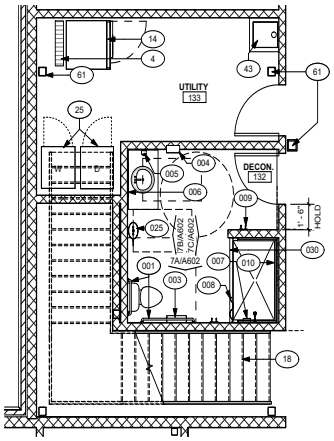

1 UTILITY/DECON
SCALE: 1/4" = 1'-0"

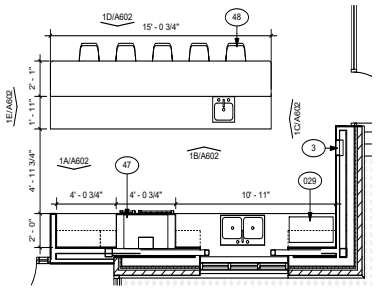

8 ENLARGED KITCHEN
SCALE: 1/4" = 1'-0"

TRUE NORTH
PROJECT NORTH

PROFESSIONAL SEAL

REGISTERED ARCHITECT
JUSTIN E. MARTINEZ
24640
STATE OF TEXAS
JAN. 16, 2020

LOGO/CONTACT

martinez ARCHITECTS

Martinez Architect, LP
900 Rockmead, Suite 250
Houston, Texas 77339
281.346.7371

DESIGN TEAM

Architectural
Martinez Architects

Civil Engineer
Maverick Engineering

Structural
Matrix Structural engineers

M/E/P/T
DBR

Landscape Architect
KDC Associates

FIRE STATION #11

CITY OF MIDLAND
6600 BRIARWOOD AVE
MIDLAND, TX 79707

PROJECT No: MA 18017
DATE: 16-JAN-2020

ISSUE
100% DESIGN DEVELOPMENT 22-MAY-2019
75% CONSTRUCTION DOCUMENT 26-JUN-2019
100% ISSUE FOR PERMIT 30-JUL-2019
100% ISSUE FOR BIDDING 30-JAN-2020

ENLARGED FLOOR PLANS

A601

4.1770

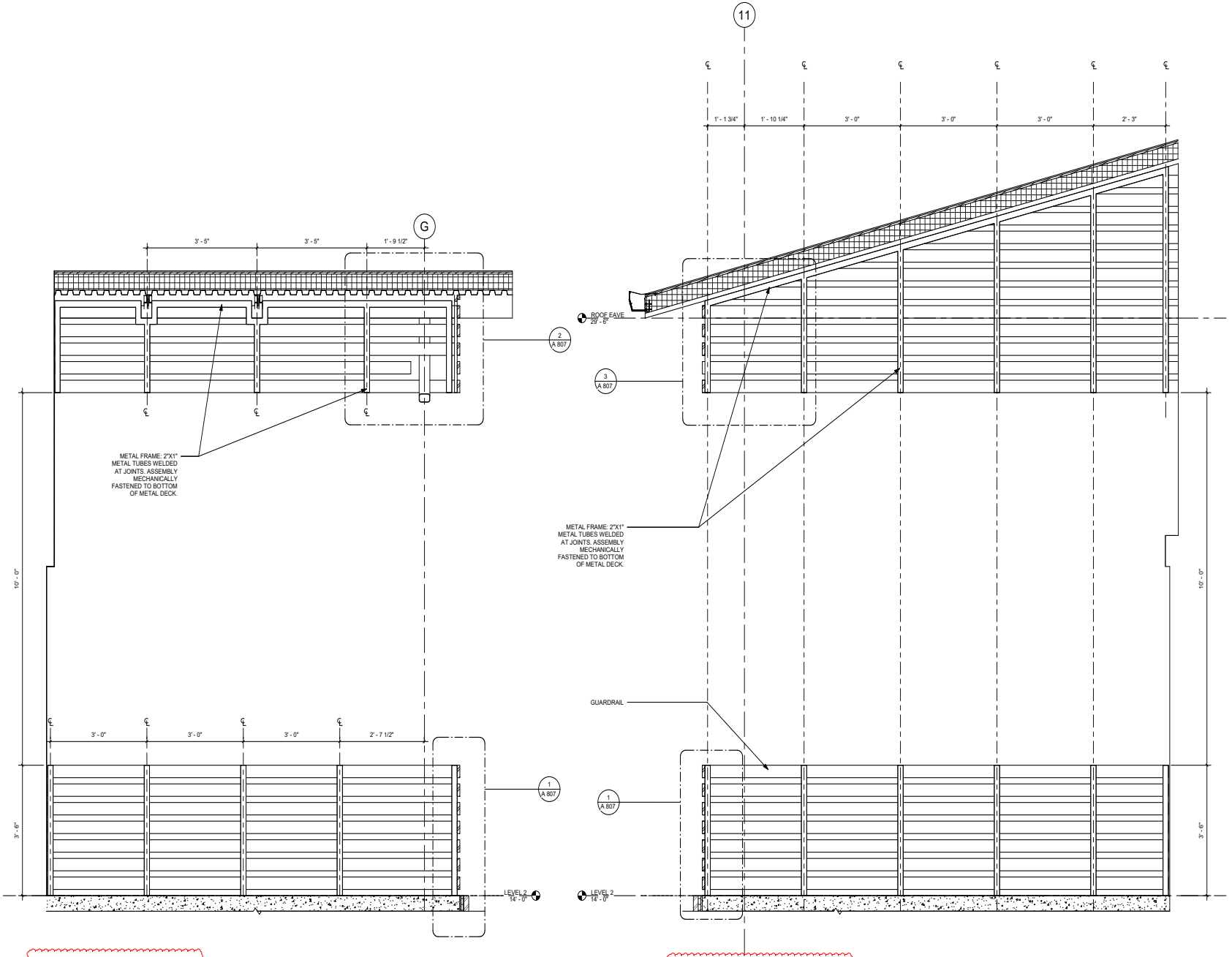

2 BALCONY DETAILS
SCALE: 3/4" = 1'-0"

1 BALCONY DETAILS
SCALE: 3/4" = 1'-0"

4.1771

PROFESSIONAL SEAL

REGISTERED ARCHITECT JUSTIN E. MYERS 24640 STATE OF TEXAS

10-JAN-2020

LOGO/CONTACT

martinez ARCHITECTS

Martinez Architect, LP
900 Rockmead, Suite 250
Houston, Texas 77339
281.346.7371

DESIGN TEAM

Architectural
Martinez Architects

Civil Engineer
Maverick Engineering

Structural
Matrix Structural Engineers

M/E/P/T
DBR

Landscape Architect
KDC Associates

FIRE STATION #5

CITY OF MIDLAND
2210 W GOLF COURSE RD
MIDLAND, TX 79701

PROJECT No: **MA 18017**
DATE: **16-JAN-2020**

ISSUE

75% CONSTRUCTION DOCUMENT
26-JUN-2019

100% ISSUE FOR PERMIT
30-JUL-2019

100% ISSUE FOR BID
30-JAN-2020

EXTERIOR DETAILS

A 806

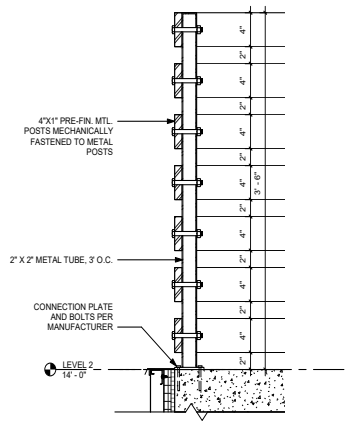

1 GUARDRAIL DETAIL
SCALE: 1 1/2" = 1'-0"

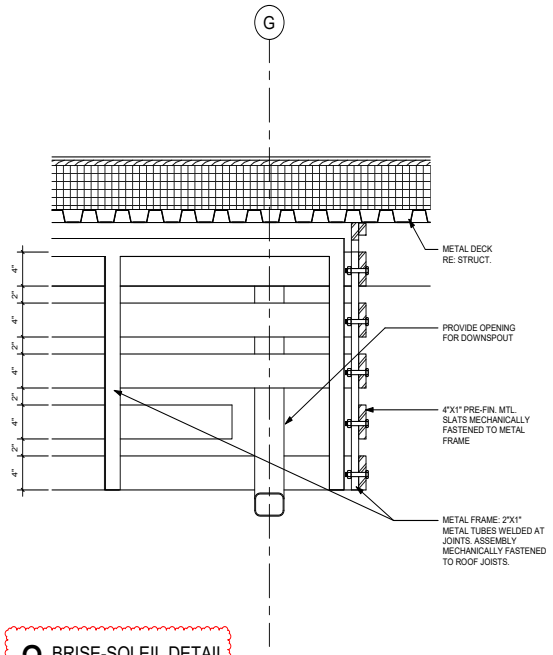

2 BRISE-SOLEIL DETAIL
SCALE: 1 1/2" = 1'-0"

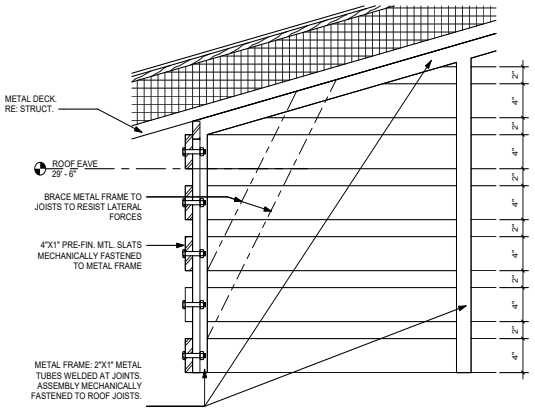

3 BRISE-SOLEIL DETAIL
SCALE: 1 1/2" = 1'-0"

PROFESSIONAL SEAL

REGISTERED ARCHITECT JUSTIN E. MYERS 24640 STATE OF TEXAS
30-JAN-2020

LOGO/CONTACT

martinez ARCHITECTS

Martinez Architect, LP
900 Rockmead, Suite 250
Houston, Texas 77339
281.346.7371

DESIGN TEAM

Architectural
Martinez Architects

Civil Engineer
Maverick Engineering

Structural
Matrix Structural Engineers

M/E/P/T
DBR

Landscape Architect
KDC Associates

FIRE STATION #5

CITY OF MIDLAND
2210 W GOLF COURSE RD
MIDLAND, TX 79701

PROJECT No: **MA 18017**
DATE: **16-JAN-2020**

ISSUE

75% CONSTRUCTION DOCUMENT 26-JUN-2019
100% ISSUE FOR PERMIT 30-JUL-2019
100% ISSUE FOR BID 30-JAN-2020

EXTERIOR DETAILS

A 807

4.1772

DOOR SCHEDULE

DOOR TAG	FROM ROOM: NAME	TO ROOM: NAME	DOOR TYPE	HARDWARE SET	THICKNESS	DOOR MATERIAL: ALUMINUM	DOOR MATERIAL: HOLLOW METAL (PAINTED)	DOOR MATERIAL: WOOD (P-LAM FACED)	DOOR MATERIAL: STEEL	FRAME MATERIAL: ALUMINUM	FRAME MATERIAL: HOLLOW METAL (PAINTED)	FRAME MATERIAL: STEEL	WALL TYPE ANCHOR: INTERIOR: 3-5/8" MTL STUD W/ 5/8" GYP BD	WALL TYPE ANCHOR: INTERIOR: 3-5/8" MTL STUD W/ 5/8" GYP BD - FIRE RATED	WALL TYPE ANCHOR: INTERIOR: 8" STRUCTURAL BRICK	WALL TYPE ANCHOR: INTERIOR: 6" CMU	WALL TYPE ANCHOR: EXTERIOR: EXTERIOR MTL. STUD	WALL TYPE ANCHOR: EXTERIOR: EXTERIOR 6" CMU	WALL TYPE ANCHOR: EXTERIOR: EXTERIOR 8" CMU	FIRE RATING	REMARKS
101 A	ENTRY	EXTERIOR	D1	D705A	0' - 1 3/4"	•				•							•				
101 B	ENTRY	APPARATUS BAYS	D2	205	0' - 1 3/4"		•				•									20 MIN.	
101 C	ENTRY	STAIRWAY	D2A	711C	0' - 1 3/4"		•				•					•				20 MIN.	
102 A	APPARATUS BAYS	DECON	D5	301	0' - 1 3/4"		•				•				•						
103 A	APPARATUS BAYS	STORAGE	D5	201	0' - 1 3/4"		•				•				•						
104 A	APPARATUS BAYS	GEAR ROOM	D5	505I	0' - 1 3/4"		•				•				•						
105 A	APPARATUS BAYS	SHOP + SCBA EQUIPMENT	D3	500S1	0' - 1 3/4"		•				•				•						
106 A	FIRE RISER/PUMP	EXTERIOR	D3	D214	0' - 1 3/4"		•				•							•			
107 A	ELECTRICAL	HALLWAY	D5	201	0' - 1 3/4"		•				•					•					
109 A	YARD STORAGE	EXTERIOR	D8	001																	
110 A	HALLWAY	OFFICE	D5	103	0' - 1 3/4"		•				•					•					
111 A	HALLWAY	EXTERIOR	D1	C715A	0' - 1 3/4"	•				•								•			
112 A	APPARATUS BAYS	UTILITY	D5	407	0' - 1 3/4"		•				•					•					
113 A	APPARATUS BAYS	AIR LOCK	D2	C205	0' - 1 3/4"		•				•					•				20 MIN.	
113 B	AIR LOCK	HALLWAY	D2A	405	0' - 1 3/4"			•			•				•					20 MIN.	
114 A	APPARATUS BAYS	EXTERIOR	D8D	002					•			•			•						
114 B	APPARATUS BAYS	EXTERIOR	D8D	002					•			•			•						
114 C	APPARATUS BAYS	EXTERIOR	D8D	002					•			•			•						
114 D	APPARATUS BAYS	EXTERIOR	D5	D715	0' - 1 3/4"	•					•				•						
114 E	APPARATUS BAYS	EXTERIOR	D5	D715	0' - 1 3/4"	•					•				•						
115 A	HALLWAY	EXERCISE	D2	407	0' - 1 3/4"	•					•					•				20 MIN.	
115 B	EXERCISE	EXTERIOR	D8A	001																	
201 A	HALLWAY	DORM 1	D5	303G	0' - 1 3/4"			•			•		•								
201 B	DORM 1	RR	D5A	303	0' - 1 3/4"			•			•		•								
203 A	HALLWAY	DORM 2	D5	303GS	0' - 1 3/4"			•			•		•								
204 A	HALLWAY	DORM 3	D5	303G	0' - 1 3/4"			•			•		•								
205 A	HALLWAY	DORM 4	D5	303GS	0' - 1 3/4"			•			•		•								
206 A	HALLWAY	ADA RR	D5	301	0' - 1 3/4"			•			•		•								
207 A	HALLWAY	RR	D5	301	0' - 1 3/4"			•			•		•								
208 A	HALLWAY	RR	D5	301	0' - 1 3/4"			•			•		•								
209 A	HALLWAY	DORM 5	D5	303GS	0' - 1 3/4"			•			•		•								
210 A	HALLWAY	DORM 6	D5	303G	0' - 1 3/4"			•			•		•								
211 A	HALLWAY	DORM 7	D5	303S	0' - 1 3/4"			•			•		•								
213 A	HALLWAY	UTILITY	D5	401	0' - 1 3/4"			•			•		•								
214 A	HALLWAY	IT	D5	201	0' - 1 3/4"			•			•		•								
215 A	HALLWAY	HALLWAY	D4	403	0' - 1 3/4"			•			•		•								
217 A	AIR LOCK	EXIT HALLWAY	D2	405	0' - 1 3/4"			•			•		•							20 MIN.	
217 B	HALLWAY	AIR LOCK	D2A	405	0' - 1 3/4"			•			•		•							20 MIN.	
219 A	KITCHEN	PANTRY 1	D5	503	0' - 1 3/4"			•			•		•								
220 A	KITCHEN	PANTRY 2	D5	503	0' - 1 3/4"			•			•		•								
221 A	KITCHEN	PANTRY 3	D5	503	0' - 1 3/4"			•			•		•								
223 A	DINING ROOM	PATIO	D1	505A	0' - 1 3/4"	•				•								•			
301 B	RAPPELLING LEVEL	RAPPELLING PLATFORM	D6	595HI	0' - 1 3/4"	•				•								•			

NOTES

1. All hollow metal door frames will be painted.
2. Re: Sheet A801 & A802 for door & window details.
3. Re: Spec. for door hardware.
4. Re: Hardware Spec. for Door Swing information
5. All interior wood doors to receive plastic laminate finish U.N.O.
6. All exterior doors to be flush doors.
7. G.C. to coordinate the installation of proximity devices. All areas shown to be roughed in with electrical as part of base bid. Coordinate requirements with proximity device vendor.
8. Storefront doors to be wide style door to accommodate panic device installation. Coordinate with contractor prior to fabrication.
9. All doors shall have thickness of 1-3/4" U.N.O.

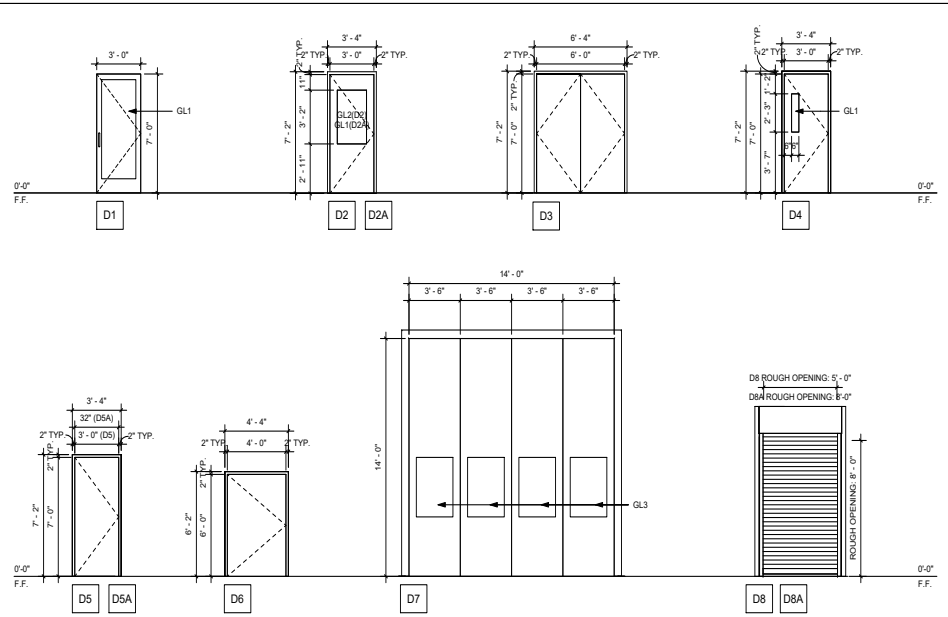

DOOR SCHEDULE
SCALE: 1/4" = 1'-0"

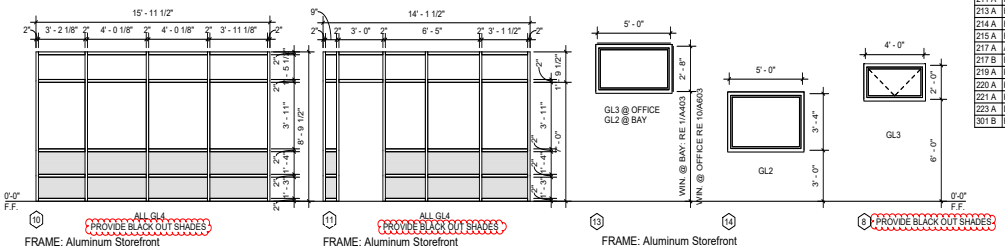

FRAME: Aluminum Storefront
WALL: Exterior Metal Stud

FRAME: Aluminum Storefront
WALL: Exterior Metal Stud

FRAME: Aluminum Storefront
WALL: Exterior Metal Stud, STRUCTURAL BRICK, CMU (RE: A201, A202)

FRAME: Aluminum Storefront
WALL: Exterior Metal Stud

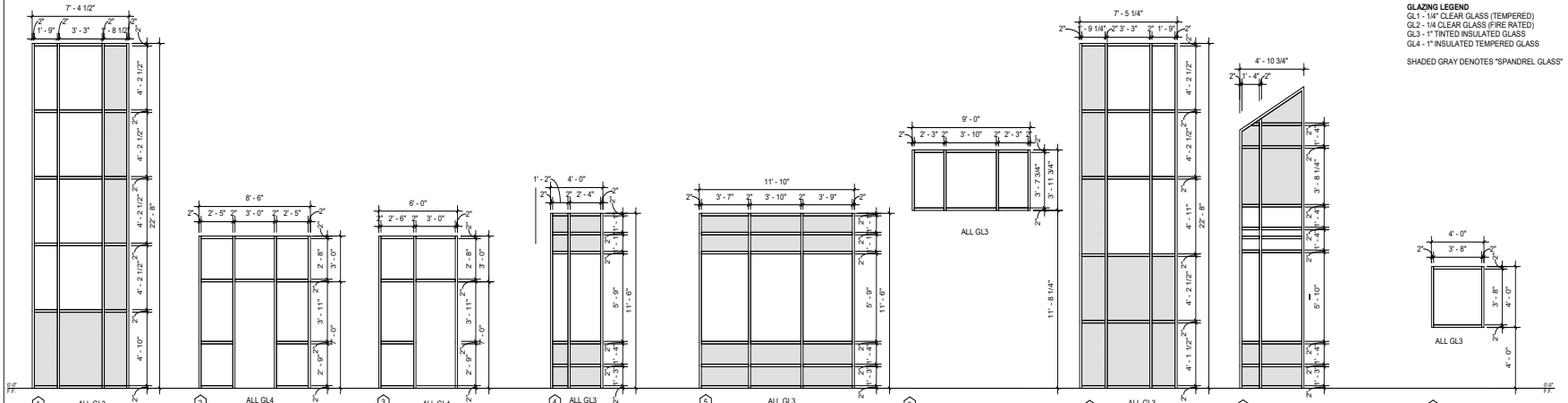

FRAME: Aluminum Curtain Wall
WALL: Exterior Metal Stud & CMU

FRAME: Aluminum Storefront
WALL: Exterior CMU

FRAME: Aluminum Storefront
WALL: Exterior CMU

FRAME: Aluminum Storefront
WALL: Exterior CMU

FRAME: Aluminum Storefront
WALL: Exterior CMU

FRAME: Aluminum Storefront
WALL: Exterior STRUCTURAL BRICK

FRAME: Aluminum Curtain Wall
WALL: Exterior Metal Stud & CMU

FRAME: Aluminum Curtain Wall
WALL: Exterior Metal Stud

FRAME: Aluminum Storefront
WALL: CMU

GLAZING LEGEND
GL1 - 1/4" CLEAR GLASS (TEMPERED)
GL2 - 1/4 CLEAR GLASS (FIRE RATED)
GL3 - 1" TINTED INSULATED GLASS
GL4 - 1" INSULATED TEMPERED GLASS

SHADED GRAY DENOTES "SPANDREL GLASS"

1 WINDOW TYPES
SCALE: 1/4" = 1'-0"

PROFESSIONAL SEAL

REGISTERED ARCHITECT JUSTIN E. MYRICK 24840 STATE OF TEXAS
10-JAN-2020

LOGO/CONTACT

martinez ARCHITECTS

Martinez Architect, LP
900 Rockmead, Suite 250
Houston, Texas 77339
281.346.7371

DESIGN TEAM

Architectural
Martinez Architects

Civil Engineer
Maverick Engineering

Structural
Matrix Structural Engineers

MEP/T
DBR

Landscape Architect
KDC Associates

FIRE STATION #5

CITY OF MIDLAND
2210 W GOLF COURSE RD
MIDLAND, TX 79701

PROJECT No: **MA 18017**
DATE: **16-JAN-2020**

ISSUE
75% CONSTRUCTION DOCUMENT 26-JUN-2019
100% ISSUE FOR PERMIT 30-JUL-2019
100% ISSUE FOR BID 30-JAN-2020

DOOR AND WINDOW SCHEDULE

A 902

4.1773

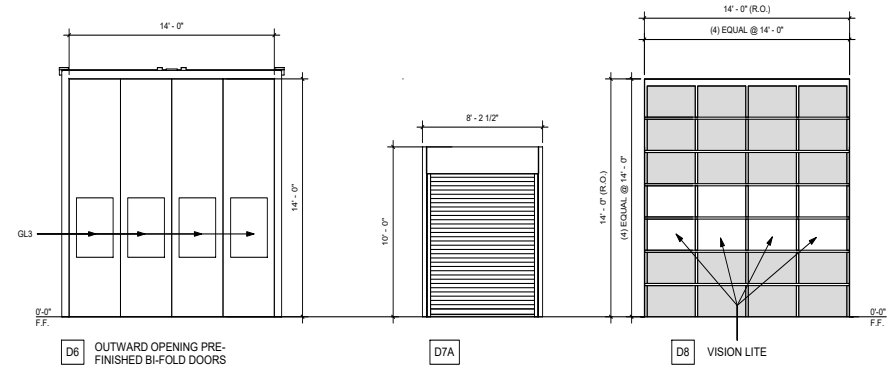

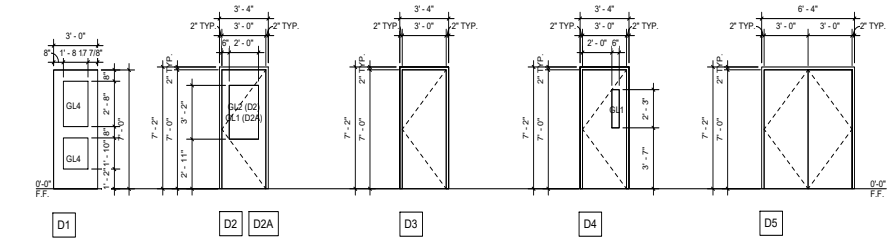

2 DOOR TYPES

GLAZING LEGEND
GL1 - 1/4" CLEAR GLASS (TEMPERED)
GL2 - 1/4" CLEAR GLASS (FIRE RATED)
GL3 - 1" TINTED INSULATED GLASS
GL4 - 1" INSULATED TEMPERED GLASS

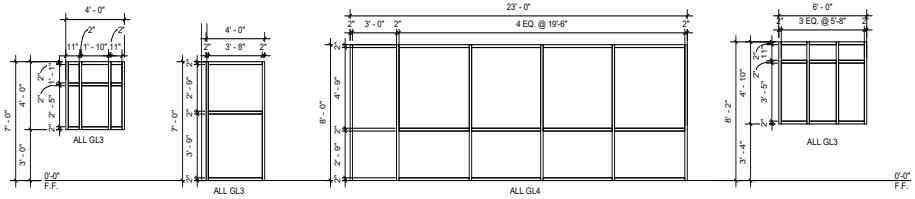

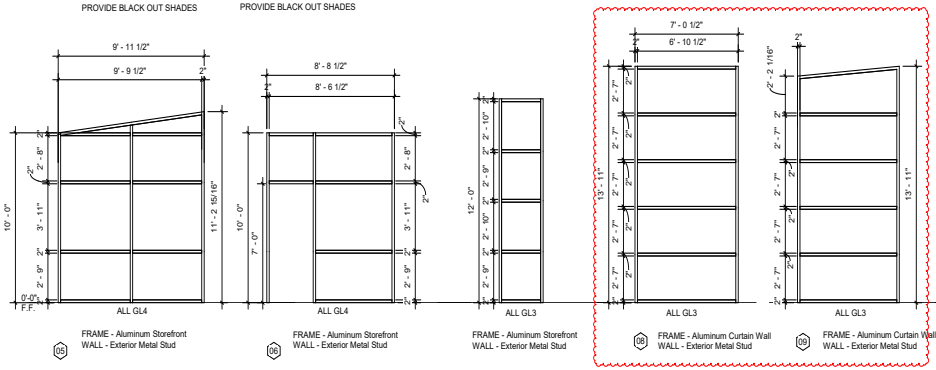

1 WINDOW TYPES

DOOR SCHEDULE - BASE BID

DOOR TAG	FROM ROOM: NAME	TO ROOM: NAME	DOOR TYPE	HARDWARE SET	THICKNESS	DOOR MATERIAL: ALUMINUM	DOOR MATERIAL: HOLLOW METAL (PAINTED)	DOOR MATERIAL: WOOD (P-LAM FACED) WILSONART "HAMPTON WALNUT"	DOOR MATERIAL: STEEL	FRAME MATERIAL: ALUMINUM	FRAME MATERIAL: HOLLOW METAL (PAINTED)	FRAME MATERIAL: STEEL	WALL TYPE ANCHOR: INTERIOR: 3-5/8" MTL STUD W/ 5/8" GYP BD	3-5/8" MTL STUD W/ 5/8" GYP BD - FIRE RATED	6" MTL. STUD ON 36" HIGH CMU BASE	6" STUD W/ GYP BD ONE SIDE & MTL LINES PANEL ONE SIDE, 36" HIGH CMU BASE	6" CMU	8" CMU WITH 5/8" GYP. BD. ONE SIDE	WALL TYPE ANCHOR: EXTERIOR: STRUCTURAL BRICK	EXTERIOR CMU	EXTERIOR STOREFRONT	FIRE RATING	REMARKS
101 A	KITCHEN	ENTRY	D1	711AV	0' - 1 3/4"	•				•			•									•		
101B	PATIO	ENTRY	D1	C715A	0' - 1 3/4"	•				•												•		
102 A	KITCHEN	OFFICE	D2A	103	0' - 1 3/4"			•			•		•											
103 A	AIR LOCK	APPARATUS BAYS	D2	C205	0' - 1 3/4"			•			•								•				20 MIN.	
103 B	KITCHEN	AIR LOCK	D2A	405	0' - 1 3/4"			•			•		•											
104 A	DINING ROOM	PANT. 1	D3	503	0' - 1 3/4"			•			•		•											
105 A	DINING ROOM	PANT. 2	D3	503	0' - 1 3/4"			•			•		•											
106 A	DAY ROOM	PANT. 3	D3	503	0' - 1 3/4"			•			•		•											
107 A	DAY ROOM	ADA RR	D3	301	0' - 1 3/4"			•			•		•											
108 A	PATIO	KITCHEN	D1	D505A	0' - 1 3/4"	•				•												•		
112 A	DAY ROOM	ELEC.	D3	201	0' - 1 3/4"			•			•		•											
113 A	AIR LOCK	APPARATUS BAYS	D2	C205	0' - 1 3/4"			•			•								•				20 MIN.	
113 B	HALLWAY	AIR LOCK	D2A	405	0' - 1 3/4"			•			•		•											
114 A	HALLWAY	DORM 8	D3	303G	0' - 1 3/4"			•			•		•											
114 B	RR	DORM 8	D3	303	0' - 1 3/4"			•			•		•											
116 A	HALLWAY	DORM 7	D3	303GS	0' - 1 3/4"			•			•		•											
116 B	RR	DORM 7	D3	303	0' - 1 3/4"			•			•		•											
117 A	HALLWAY	DORM 6	D3	303G	0' - 1 3/4"			•			•		•											
118 A	HALLWAY	DORM 5	D3	303GS	0' - 1 3/4"			•			•		•											
119 A	HALLWAY	DORM 4	D3	303GS	0' - 1 3/4"			•			•		•											
120 A	HALLWAY	DORM 3	D3	303GS	0' - 1 3/4"			•			•		•											
121 A	HALLWAY	DORM 2	D3	303GS	0' - 1 3/4"			•			•		•											
122 A	HALLWAY	DORM 1	D3	303G	0' - 1 3/4"			•			•		•											
123 A	UTILITY	HALLWAY	D3	401	0' - 1 3/4"			•			•		•											
124 A	HALLWAY	I.T.	D3	201	0' - 1 3/4"			•			•		•											
125 A	HALLWAY	RR	D3	301	0' - 1 3/4"			•			•		•											
126 A	HALLWAY	RR	D3	301	0' - 1 3/4"			•			•		•											
127 A	HALLWAY	ADA RR	D3	307	0' - 1 3/4"			•			•		•											
128 A	PATIO	HALLWAY	D1	C715A	0' - 1 3/4"	•				•												•		
128 B	HALLWAY	DAY ROOM	1001	403	0' - 1 3/4"			•			•		•										20 MIN	
128 C	DAY ROOM	HALLWAY	1001	403	0' - 1 3/4"			•			•		•										20 MIN	
129 A	PATIO	APPARATUS BAYS	1002	001					•			•									•			
129 B	PATIO	APPARATUS BAYS	1002	001					•			•									•			
129 C	PATIO	APPARATUS BAYS	1002	001					•			•									•			
129 D	PATIO	APPARATUS BAYS	1002	001					•			•									•			
129 E	APPARATUS BAYS	PATIO	D6	002					•			•									•			
129 F	APPARATUS BAYS	PATIO	D6	002					•			•									•			
129 G	APPARATUS BAYS	PATIO	D6	002					•			•									•			
129 H	APPARATUS BAYS	PATIO	D6	002					•			•									•			
129 J	APPARATUS BAYS	PATIO	D4	D715	0' - 1 3/4"		•				•										•			
130 A	PATIO	YARD STRG.	D7A	001					•			•									•			
131 A	FIRE RISER	PATIO	D3	D205	0' - 1 3/4"		•				•										•			
132 A	DECON.	APPARATUS BAYS	D3	301	0' - 1 3/4"			•			•								•					
133 A	UTILITY	APPARATUS BAYS	D3	401	0' - 1 3/4"			•			•								•					
135 A	APPARATUS BAYS	SHOP	D3	501	0' - 1 3/4"			•			•								•					
136 A	APPARATUS BAYS	AIR LOCK	D2A	735	0' - 1 3/4"			•			•								•					
136 B	AIR LOCK	PATIO	D4	C715	0' - 1 3/4"		•				•										•			
137 A	AIR LOCK	EXCERCISE	D2	509I	0' - 1 3/4"			•			•								•				20 MIN.	
137 B	PATIO	EXCERCISE	D7A	001					•			•									•			

NOTES
1. All hollow metal door frames will be painted.
2. Re: Sheet A801 & A802 for door & window details.
3. Re: Spec. for door hardware.
4. Re: Hardware Spec. for Door Swing information
5. All interior wood doors to receive plastic laminate finish U.N.O.
6. All exterior doors to be flush doors.
7. G.C. to coordinate the installation of proximity devices. All areas shown to be roughed in with electrical as part of base bid. Coordinate requirements with proximity device vendor.
8. Storefront doors to be wide style door to accommodate panic device installation. Coordinate with contractor prior to fabrication.
9. All doors shall have thickness of 1-3/4" U.N.O.

DOOR SCHEDULE - ADD ALTERNATE #2

140 A			D7	001					•			•							•				
140 B	WASH BAY	EXTERIOR	D4	505	0' - 1 3/4"		•				•								•				
140 C			D7	001					•			•							•				
141 A	CHEMICAL STORAGE	WASH BAY	D4	205	0' - 1 3/4"		•				•								•				
141 B	CHEMICAL STORAGE	EXTERIOR	D3	205	0' - 1 3/4"		•				•								•				

PROFESSIONAL SEAL
REGISTERED ARCHITECT JUSTIN E. MARTINEZ 24640 STATE OF TEXAS
JAN, 16, 2020

LOGO/CONTACT
martinez ARCHITECTS
Martinez Architect, LP
900 Rockmead, Suite 250
Houston, Texas 77339
281.346.7371

DESIGN TEAM
Architectural
Martinez Architects
Civil Engineer
Maverick Engineering
Structural
Matrix Structural engineers
M/E/P/T
DBR
Landscape Architect
KDC Associates

FIRE STATION #11
CITY OF MIDLAND
6600 BRIARWOOD AVE
MIDLAND, TX 79707

PROJECT No: **MA 18017**
DATE: **16-JAN-2020**

ISSUE
100% DESIGN DEVELOPMENT 22-MAY-2019
75% CONSTRUCTION DOCUMENT 26-JUN-2019
100% ISSUE FOR PERMIT 30-JUL-2019
100% ISSUE FOR BIDDING 30-JAN-2020

DOOR AND WINDOW SCHEDULE

A902

4.1774

SPREAD FOOTING SCHEDULE

Mark	Length	Width	Thickness	Reinforcement Bottom (Short way)	Reinforcement Bottom (Long way)	Reinforcement Top (Short way)*	Reinforcement Top (Long way)*
F3	3' - 0"	3' - 0"	1' - 6"	(4)-#5	(4)-#5		
F4	4' - 0"	4' - 0"	1' - 6"	(4)-#5	(4)-#5		
F5	5' - 0"	5' - 0"	1' - 6"	(5)-#6	(5)-#6	(5)-#5	(5)-#5
F5.5	5' - 6"	5' - 6"	1' - 6"	(5)-#6	(5)-#6		
F6	6' - 0"	6' - 0"	1' - 6"	(6)-#6	(6)-#6	(6)-#5	(6)-#5
F7	7' - 0"	7' - 0"	1' - 6"	(7)-#7	(7)-#7		
F8	8' - 0"	8' - 0"	1' - 6"	(8)-#7	(8)-#7	(8)-#5	(8)-#5
F9x11	11' - 0"	9' - 0"	1' - 6"	(11)-#7	(9)-#7	(11)-#5	(9)-#5

* PROVIDE TOP BARS AT BRACE COLUMNS AND MOMENT FRAMES ONLY.

FOUNDATION PLAN NOTES:

1. ALL SPREAD FOOTINGS ARE CENTERED UNDER COLUMN CENTERLINES, U.N.O.
2. SPREAD FOOTINGS OCCURRING AT INTERMEDIATE LOCATIONS SHALL BE CENTERED AT GRADE BEAM CENTERLINE.
3. SEE ARCHITECTURAL DRAWINGS FOR EXACT LOCATION OF ALL FLOOR SLOPES, DEPRESSIONS, ETC.
4. COORDINATE ALL BRICK LEDGES AND DEPTH WITH ARCHITECTURAL DRAWINGS.
5. LOCATIONS NOTED THUS: 0' - 0" INDICATES TOP OF SLAB ELEVATION. VERIFY WITH CIVIL FOR CORRESPONDING CIVIL ELEVATION.
6. SEE DETAILS 6 & 9/S305 FOR BASE PLATES.
7. SEE 8/S301 & 7/S301 FOR ADDITIONAL REBAR AT OPENINGS AND RE-ENTRANT CORNERS IN SLAB-ON-GRADE.
8. PROVIDE CONTRACTION JOINTS AND DISCONTINUOUS SLAB REINFORCING AS SHOWN IN DETAIL 5/S301 & 4/S301.
9. FIELD VERIFY ALL EXISTING CONDITIONS AND DIMENSIONS PRIOR TO FABRICATION / CONSTRUCTION.
10. T.D. INDICATES TURNDOWN, SEE 2/S305.
11. TOP OF FOOTING ELEVATION SHALL BE -3'-0" UNLESS NOTED THUS: T.O.F. = X'-X"

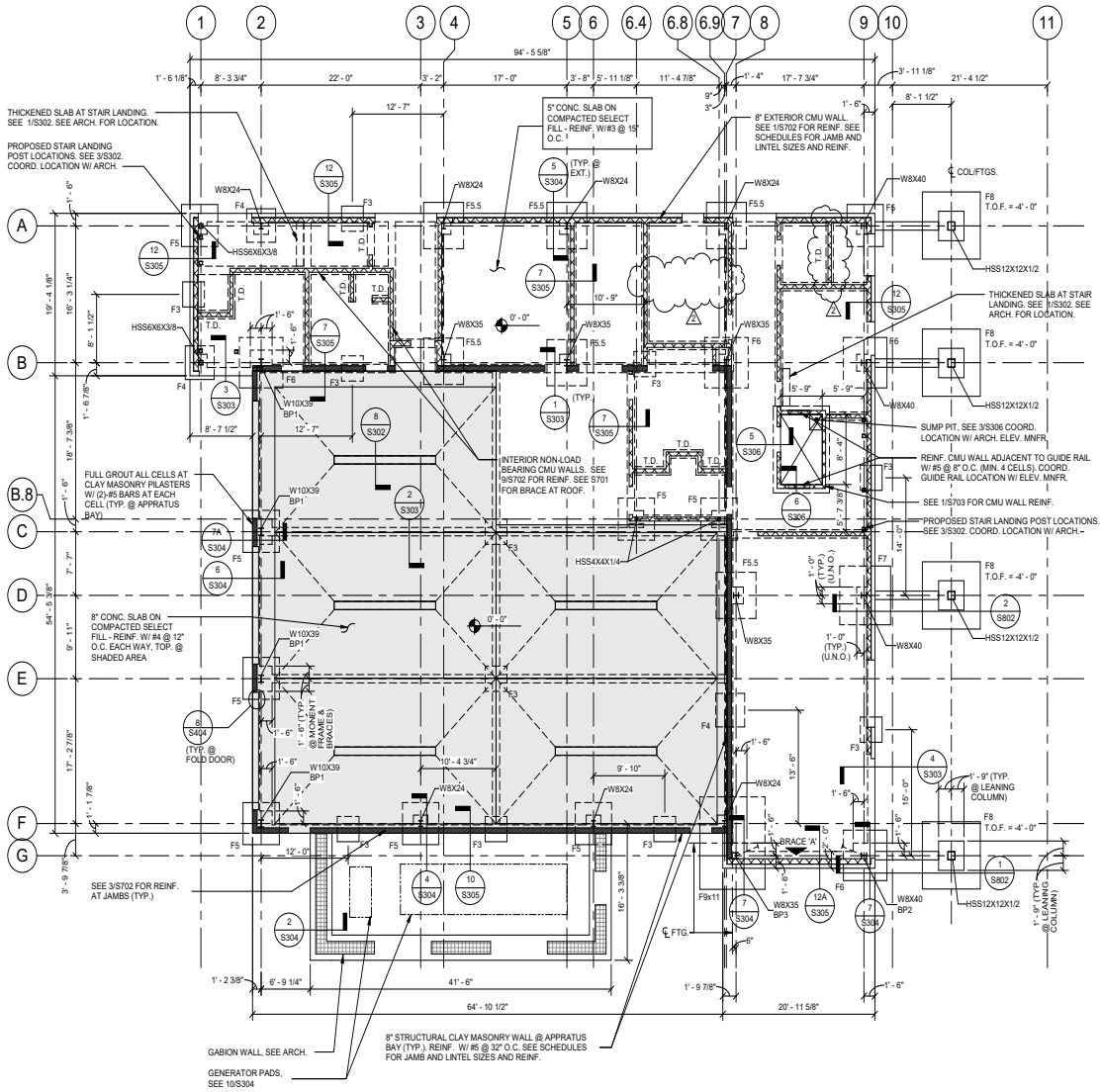

1 FOUNDATION PLAN
SCALE: 1/8" = 1'-0"

TRUE NORTH PROJECT NORTH

PROFESSIONAL SEAL
Matrix Structural Engineers
TBPE Firm Registration No. F-2640
STATE OF TEXAS
ARNOLD A. KWAYSATTEE
66260
REGISTERED PROFESSIONAL ENGINEER
02/26/20

LOGO/CONTACT
MATRIX STRUCTURAL ENGINEERS
5177 Richmond Avenue, Suite 670
Houston, TX 77056-2401
Tel: 713.664.0133
Fax: 713.664.1370
MSE - 18134

DESIGN TEAM
Architectural
Martinez Architects
Civil Engineer
Maverick Engineering
Structural
Matrix Structural Engineers
MEP
DBR
Landscaping
KDC Associates

FIRE STATION #5
CITY OF MIDLAND
2200 W GOLF COURSE RD
MIDLAND, TX 79701

PROJECT No: **MA 18017**
DATE: **01/30/2020**

No.	Date	Description
	05/21/19	100% DD
	07/30/19	100% ISSUE FOR PERMIT
	01/30/20	100% ISSUE FOR BIDDING
1	02/19/20	ADDENDUM 2
2	02/26/20	ADDENDUM 4

FOUNDATION PLAN

S201

4.1775

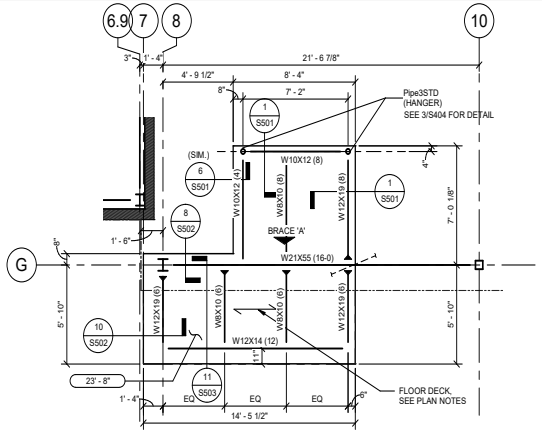

2 ENLARGED FRAMING PLAN AT RAPPELLING LEVEL

SCALE: 1/4" = 1'-0"

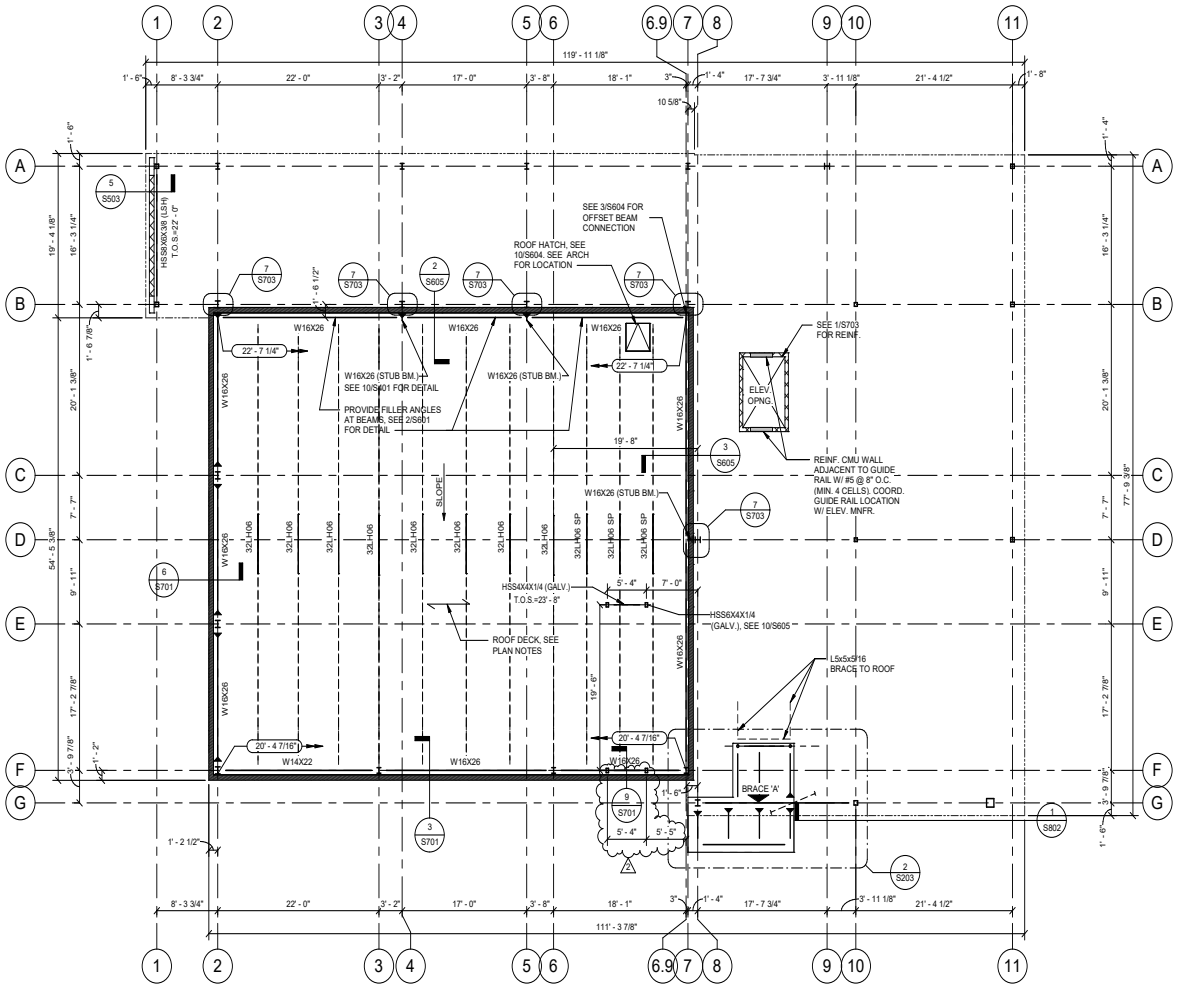

1 LOW ROOF FRAMING PLAN

SCALE: 1/8" = 1'-0"

TRUE NORTH

PROJECT NORTH

ROOF FRAMING PLAN NOTES:

1. LOCATIONS SHOWN THUS: ( ) INDICATES TOP OF STEEL (T.O.S.) ELEVATION (TOP OF STEEL = TOP OF JOIST OR BOTTOM OF DECK).
2. FIELD VERIFY ALL EXISTING CONDITIONS AND DIMENSIONS PRIOR TO FABRICATION / CONSTRUCTION.
3. JOISTS SHALL BE DESIGNED FOR ADDITIONAL LOADS RESULTING FROM RTU'S AND OTHER MECHANICAL EQUIPMENT ON THE ROOF OR SUSPENDED FROM THE ROOF STRUCTURE. SEE ARCHITECTURAL AND MEP DRAWINGS FOR LOCATIONS.
4. SPACE JOISTS EQUALLY, U.N.O.
5. PROVIDE 3/16" CLOSURE PLATES AT ALL TUBE BEAMS.
6. REFER TO ARCHITECTURAL DRAWINGS / MEP FOR LOCATIONS OF ROOF DRAINS, OVERFLOW DRAINS AND TAPERED INSULATION.

7a. ROOF SHALL BE 1.5B, 22GA DECK AS MANUFACTURED BY VULCRAFT OR EQUIVALENT. SEE ARCHITECTURAL DRAWINGS FOR INSULATION, ROOFING, ETC. WELD DECK USING 5/8"Ø NET EFFECTIVE PUDDLE WELDS:
a. PERPENDICULAR BEARING: 36/7 PATTERN.
b. PARALLEL BEARINGS AND EDGE: AT 6"O.C.
c. SIDE SEAMS: #10 TEK SCREWS AT 12"O.C.

7c. IN LIEU OF THE DECK ATTACHMENT SHOWN ABOVE, ALTERNATE DECK ATTACHMENT SHALL BE AS FOLLOWS:
a. REPLACE EACH 5/8"Ø WELD WITH ONE HILTI X-HSN 24 FASTENER FOR BASE STEEL FLANGE THICKNESS (tf) ≤ 3/8" AT THICKER BASE STEEL USE ONE HILTI X-ENP-19-L15 TYPE FASTENER.
b. REPLACE EACH SIDE SEAM #10 SCREW WITH ONE HILTI S-SLC 01 M HWH FASTENER FOR DECK THICKNESS LESS THAN OR EQUAL TO 20 GAGE.
c. ATTACHMENTS SHALL BE INSTALLED IN STRICT ACCORDANCE WITH MANUFACTURER SPECIFICATIONS.

8. SEE SHEET S801 FOR BRACE ELEVATIONS.
10. SEE SHEET S201 FOR ALL COLUMN SIZES NOT SHOWN.
11. ▶— = MOMENT CONNECTION
LSH = LONG SIDE HORIZONTAL
LSV = LONG SIDE VERTICAL
HI = HIGH
LO = LOW
12. CC : INDICATES CARRIED COLUMN, SEE DETAIL 7/S401.
13. B.F.B. INDICATES BOTTOM FLANGE BRACE, SEE 1/S602 FOR DETAIL.
14. (SC) INDICATES SLIP CRITICAL CONNECTION, SEE 12/S402 FOR DETAIL.
15. SEE 1/S603 FOR BENT BEAM DETAIL.
16. (BRKN) INDICATES BROKEN BACK BEAM. SEE 3/S602 FOR DETAIL.

FLOOR PLAN NOTES:

1. TOP OF CONCRETE ELEVATION = SEE PLAN
2. LOCATIONS SHOWN THUS: (12) C=3/4" INDICATES NUMBER OF SHEAR CONNECTORS AS 12 AND UPWARD CAMBER AT MID SPAN OF BEAM AS 3/4"
3. SPACE JOISTS EQUALLY U.N.O.
4. PROVIDE END PLATES AT ALL TUBE BEAMS.
5. FIELD VERIFY ALL EXISTING CONDITIONS AND DIMENSIONS PRIOR TO FABRICATION / CONSTRUCTION.
2. SEE SHEET S201 FOR ALL COLUMN SIZES NOT SHOWN.
9. ▶— = MOMENT CONNECTION
LSH = LONG SIDE HORIZONTAL
LSV = LONG SIDE VERTICAL
10. CC: INDICATES CARRIED COLUMN, SEE DETAIL 7/S401.
11. ALL LOWER TUBE BEAM ELEVATIONS TO BE VERIFIED WITH ARCHITECT DRAWINGS.
12. FLOOR SHALL BE 3 1/2" NORMAL WEIGHT CONCRETE OVER THE FLUTES OF 2" x 18 GA TYPE VLI STEEL DECK AS MANUFACTURED BY VULCRAFT OR APPROVED EQUIVALENT TO TOTAL THICKNESS = 5 1/2". REINFORCE CONCRETE WITH #3 AT 18" O.C. EACH WAY. PLACE REBAR PERPENDICULAR TO BEAMS (PARALLEL TO DECK) IN THE OUTSIDE LAYER. WELD DECK USING 5/8"Ø NET EFFECTIVE PUDDLE WELDS:
a. PERPENDICULAR BEARING : 36/4 PATTERN.
b. PARALLEL BEARING AND EDGE : AT 12" O.C.
c. SIDE SEAMS : SEAM WELDS AT 12" O.C.
13. (SC) INDICATES SLIP CRITICAL CONNECTION, SEE 10/S802 FOR DETAIL.

PROFESSIONAL SEAL

Matrix Structural Engineers
TBPE Firm Registration No. F-2640

STATE OF TEXAS — HRISOS A. KYRIAZIS — 66260 — REGISTERED PROFESSIONAL ENGINEER

02/26/20

LOGO/CONTACT

MATRIX STRUCTURAL ENGINEERS

5177 Richmond Avenue, Suite 670
Houston, TX 77056-2401
Tel: 713.664.0133
Fax: 713.664.1370
MSE - 18134

DESIGN TEAM

Architectural
Martinez Architects

Civil Engineer
Maverick Engineering

Structural
Matrix Structural Engineers

MEP
DBR

Landscaping
KDC Associates

FIRE STATION #5

CITY OF MIDLAND
2200 W GOLF COURSE RD
MIDLAND, TX 79701

PROJECT No: **MA 18017**
DATE: **01/30/2020**

No.	Date	Description
	05/21/19	100% DD
	07/30/19	100% ISSUE FOR PERMIT
	01/30/20	100% ISSUE FOR BIDDING
1	02/19/20	ADDENDUM 2
2	02/26/20	ADDENDUM 4

LOW ROOF FRAMING PLAN

S203

4.1776

FIRE STATION #5

CITY OF MIDLAND
2200 W GOLF COURSE RD
MIDLAND, TX 79701

12 — TYPICAL CMU BOND BEAM REINFORCEMENT

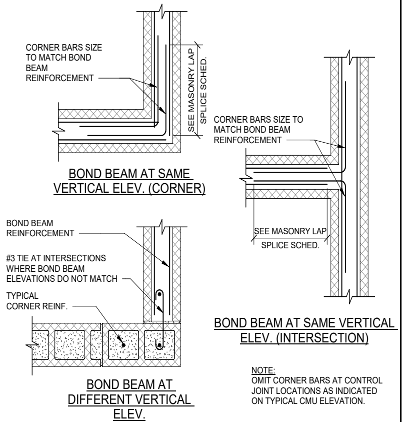

NOTE:
OMIT CORNER BARS AT CONTROL JOINT LOCATIONS AS INDICATED ON TYPICAL CMU ELEVATION.

TYPICAL CMU BOND BEAM REINFORCEMENT

SCALE: N.T.S.

9 — TYPICAL DETAIL EXTERIOR EDGE AT STRUCTURAL BRICK WALL (JOIST PERPENDICULAR TO BEAMS)

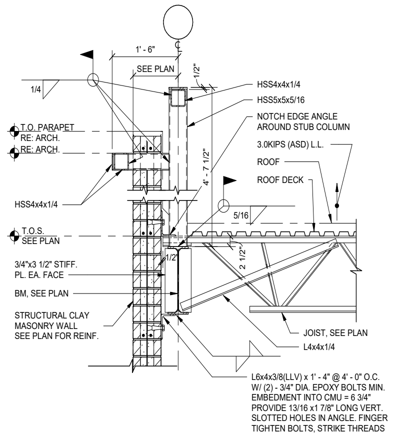

TYPICAL DETAIL
EXTERIOR EDGE AT STRUCTURAL BRICK WALL
(JOIST PERPENDICULAR TO BEAMS)

SCALE: 3/4" = 1'-0"

6 — TYPICAL DETAIL EXTERIOR EDGE AT STRUCTURAL BRICK WALL (JOIST PARALLEL TO BEAMS)

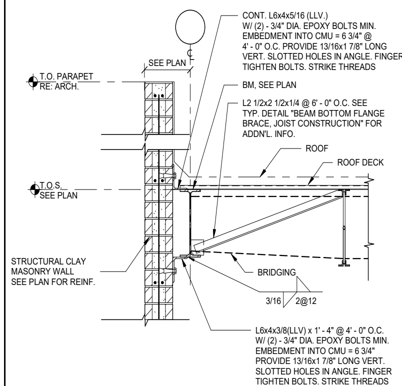

TYPICAL DETAIL
EXTERIOR EDGE AT STRUCTURAL BRICK WALL
(JOIST PARALLEL TO BEAMS)

SCALE: 3/4" = 1'-0"

3 — TYPICAL DETAIL EXTERIOR EDGE AT STRUCTURAL BRICK WALL (JOIST PERPENDICULAR TO BEAMS)

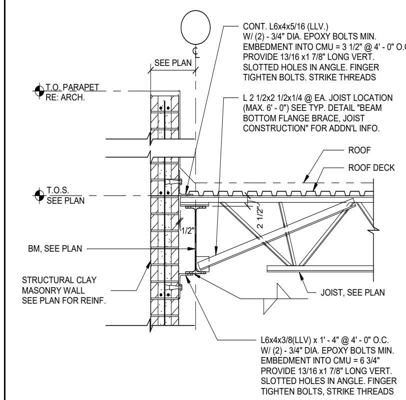

TYPICAL DETAIL
EXTERIOR EDGE AT STRUCTURAL BRICK WALL
(JOIST PERPENDICULAR TO BEAMS)

SCALE: 3/4" = 1'-0"

11 — TYPICAL DETAIL CMU VERTICAL BAR PLACEMENT

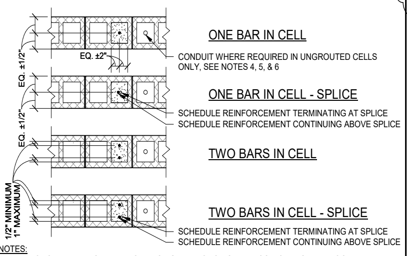

NOTES:
1. REINFORCEMENT MUST BE PLACED USING REINFORCING BAR POSITIONERS THAT LOCATE THE BAR AS SPECIFIED AND PREVENT MOVEMENT OF THE BAR DURING CONSTRUCTION.
2. SPLICED REINFORCEMENT MUST BE A CONTACT LAP SPLICE WITH SPLICED BARS ALIGNED PARALLEL TO THE WALL AS SHOWN.
3. THE ENGINEER MUST BE NOTIFIED PRIOR TO PLACEMENT OF REINFORCEMENT THAT IS REQUIRED TO BE PLACED OUTSIDE OF THE TOLERANCES OF THIS DETAIL SUCH AS TO AVOID INTERFERENCE WITH OTHER REINFORCEMENT, CONDUITS, OR EMBEDDED ITEMS.
4. CONDUIT, PIPES AND SLEEVES SHALL BE NO CLOSER THAN 3 DIAMETERS ON CENTER (USE LARGER DIAMETER WHERE MULTIPLE SIZES ARE USED).
5. ALUMINUM PIPES MAY NOT BE USED UNLESS EFFECTIVELY COATED TO PREVENT CHEMICAL REACTION.
6. PIPES SHALL NOT BE EMBEDDED IN MASONRY WHEN:
   (a) CONTAINING LIQUIDS, GAS, OR VAPORS AT A TEMPERATURE HIGHER THAN 150°F (66°C).
   (b) UNDER PRESSURE IN EXCESS OF 55 PSI (379 KPA).
   (c) CONTAINING WATER OR OTHER LIQUIDS SUBJECT TO FREEZING.

TYPICAL DETAIL
CMU VERTICAL BAR PLACEMENT

SCALE: N.T.S.

8 — CMU WALL INTERSECTIONS

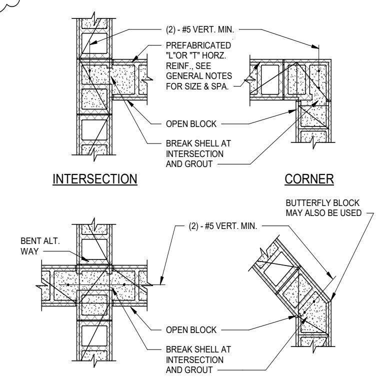

CMU WALL INTERSECTIONS

SCALE: N.T.S.

5 — TYPICAL DETAIL INTERIOR NON-LOAD BEARING CMU WALL TOP CONNECTION TO STEEL BEAM

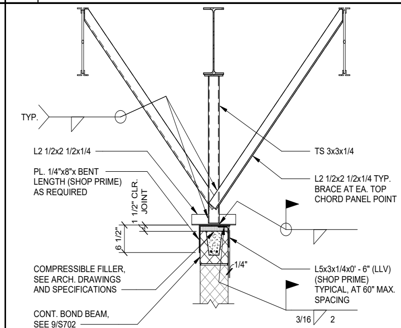

NOTES:
1. THIS DETAIL IS TO BE USED ONLY IF INTERSECTING SUPPORT WALLS EXCEED A SPACING OF 26 TIMES THE NOMINAL THICKNESS.
2. SEE 9/S702 FOR BRACE LOCATION REQUIREMENTS.

TYPICAL DETAIL
INTERIOR NON-LOAD BEARING CMU WALL
TOP CONNECTION TO STEEL BEAM

SCALE: N.T.S.

2 — TYPICAL DETAIL INTERIOR NON-LOAD BEARING CMU WALL TOP CONNECTION PARALLEL TO BAR JOISTS

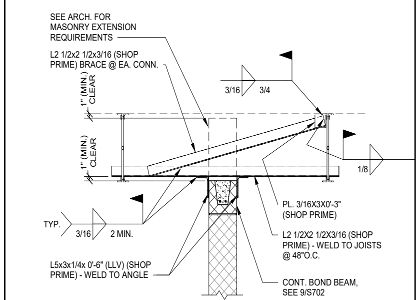

NOTES:
1. THIS DETAIL IS TO BE USED ONLY IF INTERSECTING SUPPORT WALLS EXCEED A SPACING OF 26 TIMES THE NOMINAL THICKNESS.
2. SEE 9/S702 FOR BRACE LOCATION REQUIREMENTS.

TYPICAL DETAIL
INTERIOR NON-LOAD BEARING CMU WALL TOP
CONNECTION PARALLEL TO BAR JOISTS

SCALE: N.T.S.

10 — TYPICAL DETAIL MASONRY TENSION LAP SPLICE (INCHES)

BAR SIZE	MINIMUM LAP SPLICE LENGTH — REINFORCEMENT AT CENTER OF WALL				REINFORCEMENT OFF CENTER
	6" CMU	8" CMU	10" CMU	12" CMU	ANY
3	12	12	12	12	19
4	20	15	12	12	34
5	32[4]	23	18	15	45
6	54[4]	43	34	28	54
7	N/A[5]	60	46	38	63
8	N/A[5]	72	71	57	72

NOTES:
1. TABLE FOR USE WITH GRADE 60 UNCOATED REINF. BARS IN CMU (f'm = 1500 psi)
2. BARS SPLICED BY NON-CONTACT LAP SPLICE SHALL NOT BE SPACED FARTHER APART THAN, ONE-FIFTH THE REQUIRED LAP LENGTH, OR 8".
3. LAP LENGTHS PER IBC 2012.
4. PERMITTED ONLY IF ALL MORTAR FINS ARE REMOVED ROM THE CELL TO BE GROUTED.
5. BAR EXCEEDS MAX. ALLOWABLE SIZE.

TYPICAL DETAIL
MASONRY TENSION LAP SPLICE (INCHES)

SCALE: N.T.S.

7 — MASONRY WALL CONTROL JOINT

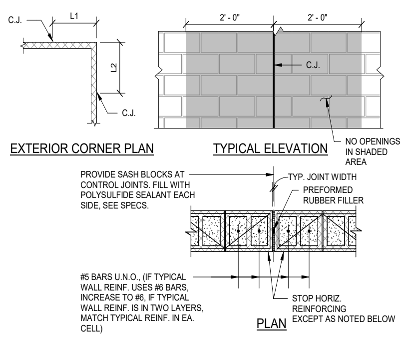

NOTES:
1. CONTRACTOR SHALL OBTAIN ARCHITECT'S APPROVAL OF JOINT LOCATIONS, WHICH SHALL NOT EXCEED THE MINIMUM OF 1.5 TIMES THE WALL HEIGHT OR 20'-0".
2. HORIZONTAL REINFORCING AT FLOOR AND ROOF LINES SHALL BE CONTINUOUS THRU JOINT.
3. CONCRETE BLOCK SHOWN - BRICK SIMILAR.
4. SAWCUT BLOCK OR BRICK AS REQUIRED.
5. AT EXTERIOR CORNERS LOCATE JOINTS SUCH THAT:
   L1+L2 ≤ 20' - 0",
   EITHER L1 OR L2 ≤ 10' - 0".

MASONRY WALL CONTROL JOINT

SCALE: N.T.S.

4 — TYPICAL DETAIL INTERIOR NON-LOAD BEARING CMU WALL TOP CONNECTION PERPENDICULAR TO JOISTS

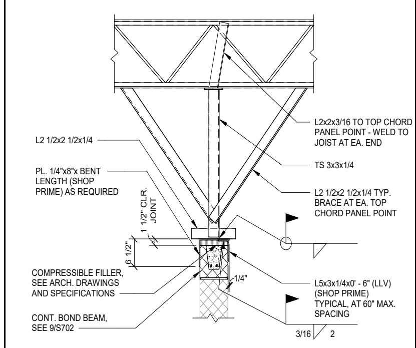

NOTES:
1. THIS DETAIL IS TO BE USED ONLY IF INTERSECTING SUPPORT WALLS EXCEED A SPACING OF 26 TIMES THE NOMINAL THICKNESS.
2. SEE 9/S702 FOR BRACE LOCATION REQUIREMENTS.

TYPICAL DETAIL
INTERIOR NON-LOAD BEARING CMU WALL TOP
CONNECTION PERPENDICULAR TO JOISTS

SCALE: N.T.S.

1 — TYPICAL DETAIL INTERIOR NON-LOAD BEARING CMU WALL TOP CONNECTION PERPENDICULAR TO BAR JOISTS

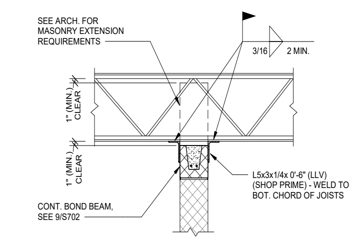

NOTES:
1. THIS DETAIL IS TO BE USED ONLY IF INTERSECTING SUPPORT WALLS EXCEED A SPACING OF 26 TIMES THE NOMINAL THICKNESS.
2. SEE 9/S702 FOR BRACE LOCATION REQUIREMENTS.

TYPICAL DETAIL
INTERIOR NON-LOAD BEARING CMU
WALL TOP CONNECTION
PERPENDICULAR TO BAR JOISTS

SCALE: N.T.S.

PROFESSIONAL SEAL

Matrix Structural Engineers
TBPE Firm Registration No. F-2640

LOGO/CONTACT

MATRIX STRUCTURAL ENGINEERS

5177 Richmond Avenue, Suite 670
Houston, TX 77046-2401
Tel: 713.664.0130
Fax: 713.664.1370
MSE - 18134

DESIGN TEAM

Architectural
Martinez Architects

Civil Engineer
Maverick Engineering

Structural
Matrix Structural Engineers

MEP
DBR

Landscaping
KDC Associates

PROJECT No: MA 18017
DATE: 01/30/2020

No.	Date	Description
	05/21/19	100% DD
	07/30/19	100% ISSUE FOR PERMIT
	01/30/20	100% ISSUE FOR BIDDING
2	02/26/20	ADDENDUM 4

MASONRY DETAILS

S701

4.1777

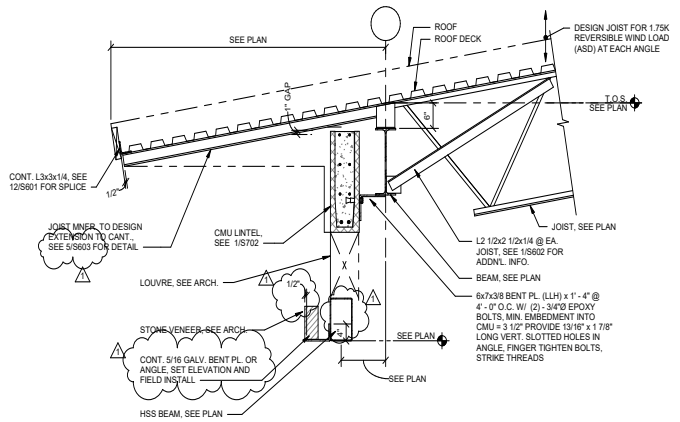

ROOF FRAMING DETAIL

6 SCALE: 3/4" = 1'-0"

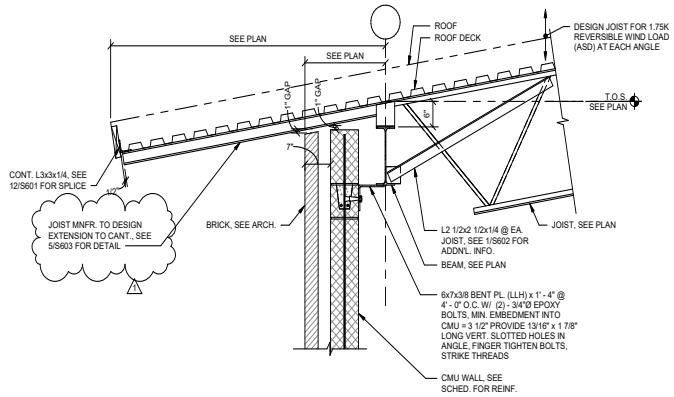

ROOF FRAMING DETAIL

3 SCALE: 3/4" = 1'-0"

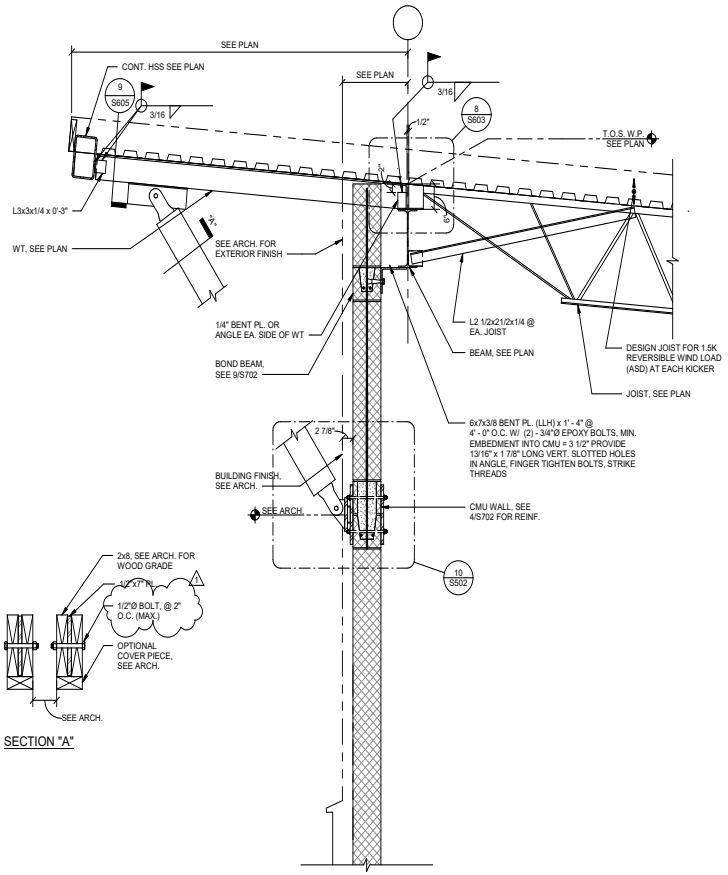

SECTION "A"

ROOF FRAMING DETAIL

7 SCALE: 3/4" = 1'-0"

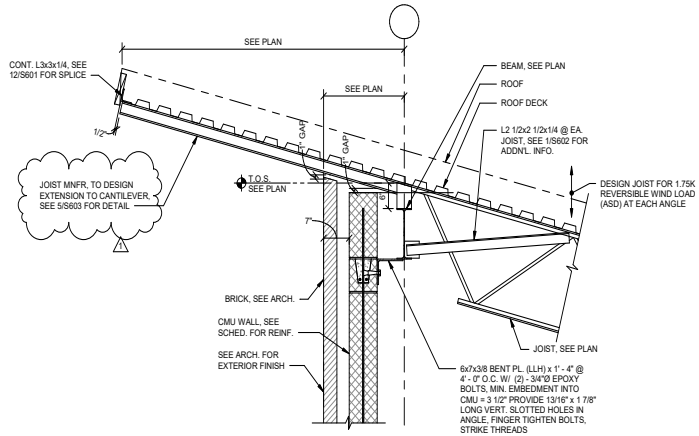

2 SCALE: 3/4" = 1'-0"

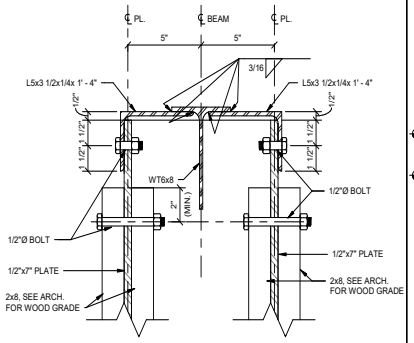

TUBE TO WT CONNECTION

9 SCALE: 3" = 1'-0"

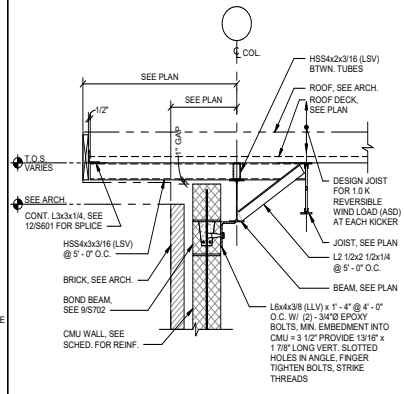

ROOF FRAMING DETAIL

1 SCALE: 3/4" = 1'-0"

PROFESSIONAL SEAL

Matrix Structural Engineers
TBPE Firm Registration No. F-2640

01/30/2020

LOGO/CONTACT

MATRIX STRUCTURAL ENGINEERS

5177 Richmond Avenue, Suite 670
Houston, TX 77056-2401
Tel: 713.664.0133
Fax: 713.664.1370
TBPE Firm Registration No. F-2640
MSE - 18135

DESIGN TEAM

Architectural
Martinez Architects

Civil Engineer
Maverick Engineering

Structural
Matrix Structural engineers

MEP
DBR

Landscaping
KDC Associates

FIRE STATION #11

CITY OF MIDLAND

Briarwood Ave & Golden Gate Dr
Midland, TX 79707

PROJECT No: **MA 18017**
DATE: **01/30/2020**

No.	Date	Description
	05/21/19	100% DD
	07/30/19	ISSUE FOR PERMIT
	01/30/20	100% ISSUE FOR BIDDING
1	02/19/20	ADDENDUM 2

ROOF FRAMING DETAILS

S605

4.1778

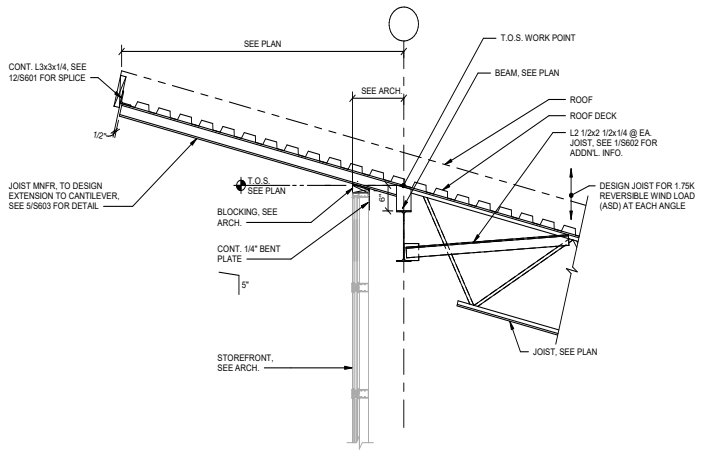

6

SCALE: 3/4" = 1'-0"

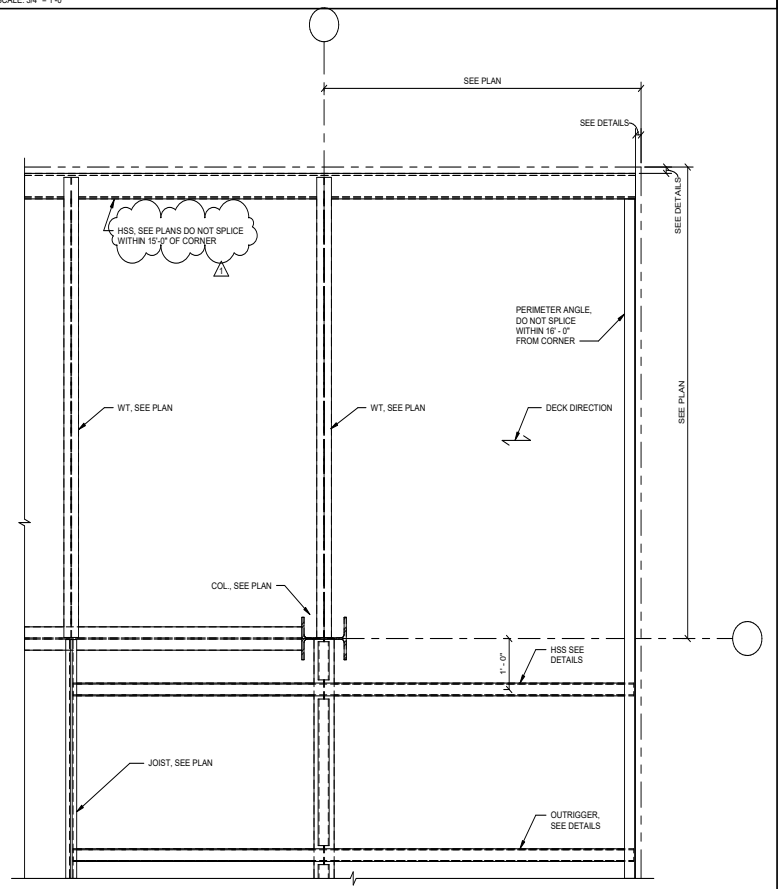

EXTERIOR PERIMETER CORNER ROOF FRAMING DETAIL

4

SCALE: 3/4" = 1'-0"

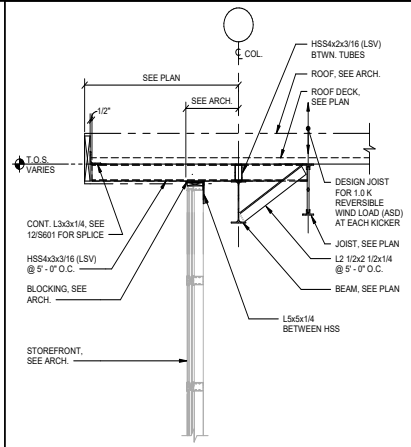

ROOF FRAMING DETAIL

7

SCALE: 3/4" = 1'-0"

4.1779

PROFESSIONAL SEAL

Matrix Structural Engineers
TBPE Firm Registration No. F-2640

STATE OF TEXAS
JAYNOOL A. KHAYRATTEE
65260
LICENSED
PROFESSIONAL ENGINEER

01/30/2020

LOGO/CONTACT

MATRIX
STRUCTURAL
ENGINEERS

5177 Richmond Avenue, Suite 670
Houston, TX 77046-2401
Tel: 713.664.0133
Fax: 713.664.1370
MSE - 18135

DESIGN TEAM

Architectural
Martinez Architects

Civil Engineer
Maverick Engineering

Structural
Matrix Structural engineers

MEP
DBR

Landscaping
KDC Associates

FIRE STATION #11

CITY OF MIDLAND
Briarwood Ave & Golden Gate Dr
Midland, TX 79707

PROJECT No: **MA 18017**
DATE: **01/30/2020**

No.	Date	Description
	05/21/19	100% DD
	07/30/19	ISSUE FOR PERMIT
	01/30/20	100% ISSUE FOR BIDDING
1	02/19/20	ADDENDUM 2

ROOF FRAMING DETAILS

S610

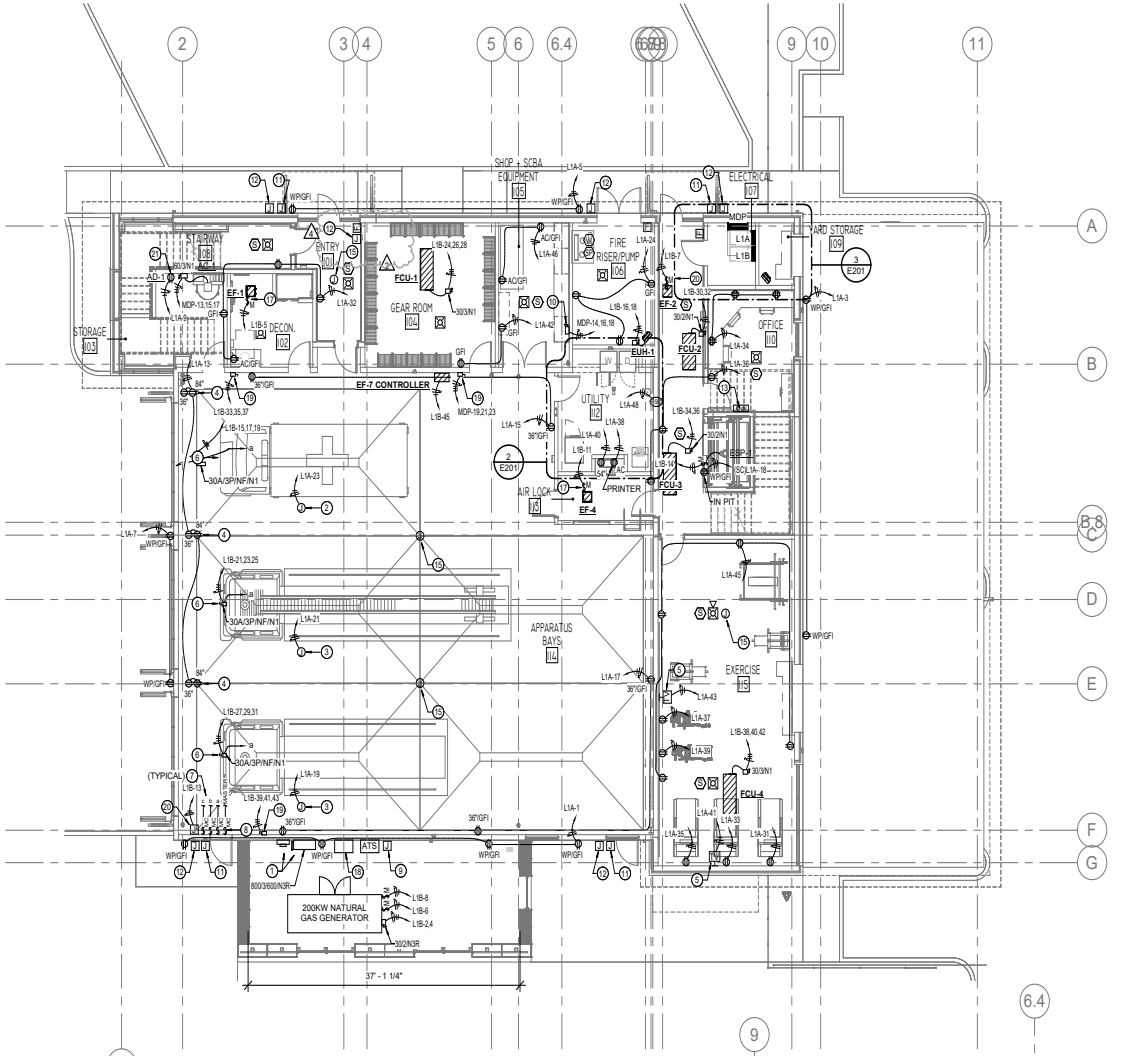

1 LEVEL 1 POWER PLAN
E201 — 1/8" = 1'-0"

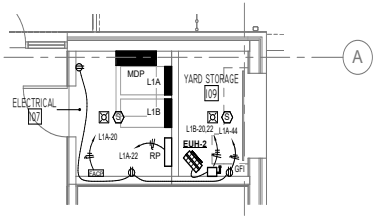

3 ENLARGED POWER PLAN - ELECTRICAL 107
E201 — 1/4" = 1'-0"

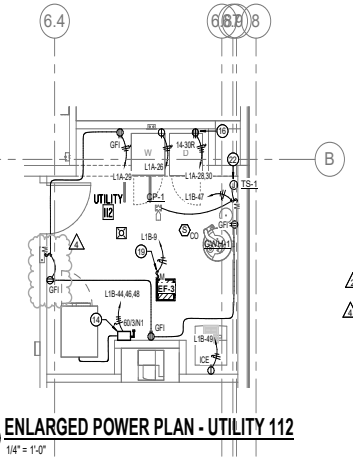

2 ENLARGED POWER PLAN - UTILITY 112
E201 — 1/4" = 1'-0"

ELECTRICAL GENERAL NOTES

A. ELECTRICAL CONTRACTOR SHALL GROUP HOMERUNS WITH THREE HOTS (A,B, AND C PHASE), AND #10 NEUTRAL TO PROVIDE MULTI-WIRE BRANCH CIRCUITS. NO MORE THAN 1 MULTI-WIRE HOMERUNS PER CONDUIT. CONTRACTOR SHALL PROVIDE HANDLE TIES MANUFACTURED BY THE SWITCH GEAR SUPPLIER ON ALL MULTI-WIRE CIRCUITS TO MEET THE REQUIREMENTS OF ARTICLE 210.4(B) OF THE 2017 NEC. AT THE CONTRACTOR'S OPTION, TWO AND THREE POLE BREAKERS MAY BE USED.

B. CONTRACTOR SHALL VERIFY DEVICE LOCATIONS WITH ARCHITECT PRIOR TO ROUGH-IN. REFER TO ARCHITECTURAL CASEWORK AND MILLWORK ELEVATIONS.

C. ELECTRICAL CONTRACTOR SHALL PROVIDE CONDUIT, OUTLET BOXES, JUNCTION BOXES FOR ALL TECHNOLOGY DEVICE OUTLETS. REFER TO DIVISION 26 SPECIFICATIONS AND TECHNOLOGY DRAWINGS FOR ALL WORK REQUIRED.

D. HVAC AND PLUMBING EQUIPMENT MAY DIFFER FROM LOCATIONS AS SHOWN ON ELECTRICAL DRAWINGS. COORDINATE EXACT LOCATIONS WITH MECHANICAL AND PLUMBING CONTRACTOR.

E. ALL SINGLE-PHASE RECEPTACLES RATED 150 VOLTS TO GROUND, OR LESS, 50 AMPERES OR LESS AND THREE-PHASE RECEPTACLES RATED 150 VOLTS TO GROUND OR LESS, 100A OR LESS, IN FOOD SERVICE AREAS, BATHROOMS, ROOFTOPS, OUTDOORS, INDOOR WET LOCATIONS, LOCKER ROOMS, OR CRAWL SPACES SHALL BE GFCI, IN ACCORDANCE WITH NEC 210.8(B).

F. ELECTRICAL CONTRACTOR TO COORDINATE WITH PURVIS INSTALLER FOR ALL REQUIREMENTS PRIOR TO ROUGH-IN.

G. ELECTRICAL CONTRACTOR SHALL PROVIDE CONTACTOR FOR SHUTOFF TO ELECTRIC OVEN. MUST BE TIED INTO PURVIS SYSTEM. MANUAL RESET FOR GAS AND ELECTRICAL SHUTOFFS BY ELECTRICAL CONTRACTOR.

H. ALL EXTERIOR EQUIPMENT (SPECIFICALLY THE GENERATOR AND MECHANICAL EQUIPMENT) MUST MEET THE TEXAS DEPARTMENT OF INSURANCE WIND LOAD REQUIREMENTS.

ELECTRICAL KEYED NOTES

1. PROPOSED LOCATION FOR ELECTRICAL SERVICE EQUIPMENT. FIELD COORDINATE INSTALLATION WITH POWER COMPANY, REFER TO ONE LINE DIAGRAM ON SHEET E401 FOR ADDITIONAL INFORMATION.
2. PROVIDE RETRACTABLE POWER CORD REEL WITH 120V 20A RECEPTACLE, FURNISHED WITH PIVOT BASE. PROVIDE DUPLEX RECEPTACLE AT CORD REEL BASE. FIELD COORDINATE EXACT LOCATION, CABLE LENGTH AND ADDITIONAL REQUIREMENTS WITH ARCHITECT/OWNER PRIOR TO ROUGH-IN. PROVIDE WITH QUICK RELEASE PLUG. RE 4/E602.
3. PROVIDE RETRACTABLE POWER CORD REEL WITH 120V 20A RECEPTACLE, FURNISHED WITH 120V 20A RECEPTACLE. PROVIDE DUPLEX RECEPTACLE AT CORD PROVIDE DUPLEX RECEPTACLE AT CORD REEL BASE. FIELD COORDINATE EXACT LOCATION, CABLE LENGTH AND ADDITIONAL REQUIREMENTS WITH ARCHITECT/OWNER PRIOR TO ROUGH-IN. PROVIDE WITH QUICK RELEASE PLUG. RE 4/E602.
4. RECEPTACLES FOR TURN OUT TIMER. COORDINATE MOUNTING HEIGHTS AND ALL REQUIREMENTS WITH OWNER PRIOR TO ROUGH IN.
5. POWER AND A/V OUTLETS FOR WALL MOUNTED TELEVISION. FIELD COORDINATE EXACT LOCATION WITH ARCHITECT/OWNER PRIOR TO ROUGH-IN. COORDINATE PURVIS SYSTEM WITH TECHNOLOGY DRAWINGS.
6. PROVIDE POWER CONNECTION TO BAY DOOR MOTOR CONTROLLER. FIELD COORDINATE EXACT LOCATION, CONTROL WIRING QUANTITIES AND ADDITIONAL REQUIREMENTS WITH DOOR INSTALLER PRIOR TO ROUGH-IN. ROUTE (1) 3/4" CONDUIT WITH CONTROL WIRE TO ASSOCIATED OPEN/CLOSE SWITCH.
7. PROVIDE OPEN/CLOSE CONTROL SWITCH FOR MOTORIZED FOLDING DOOR. FIELD COORDINATE EXACT LOCATION WITH ARCHITECT/OWNER PRIOR TO ROUGH-IN.
8. PROVIDE OPEN/CLOSE MASTER CONTROL SWITCH. COORDINATE EXACT LOCATION WITH ARCHITECT AND DOOR INSTALLER PRIOR TO ROUGH-IN. SWITCH SHALL CONTROL ALL 3 FRONT FOLDING DOORS.
9. 120V JUNCTION BOX CONNECTION FOR IRRIGATION CONTROLLER. FIELD COORDINATE EXACT LOCATION, MOUNTING HEIGHT AND ADDITIONAL REQUIREMENTS WITH LANDSCAPE CONTRACTOR PRIOR TO ROUGH-IN.
10. PROVIDE 100A/3P/NF/N1 SAFETY DISCONNECT RATED FOR 20 HP MINIMUM FOR CASCADE COMPRESSOR. FIELD COORDINATE EXACT LOCATION AND ADDITIONAL EQUIPMENT REQUIREMENTS WITH INSTALLER PRIOR PLACEMENT.
11. PROVIDE BACK BOX FOR WALL MOUNTED CALL BUTTON. FIELD COORDINATE EXACT LOCATION AND ADDITIONAL REQUIREMENTS WITH TECHNOLOGY CONTRACTOR AND OWNER PRIOR TO ROUGH-IN. ROUTE (1) 1" CONDUIT WITH PULLSTRING FROM BACK BOX TO UP ABOVE CEILING. PROVIDE WEATHER PROOF BACK-BOXES FOR OUTDOOR DEVICES.
12. PROVIDE 120V JUNCTION BOX CONNECTION FOR CARD READER. FIELD COORDINATE EXACT LOCATION WITH ARCHITECT/ OWNER.
13. GENERATOR REMOTE ANNUNCIATOR. COORDINATE EXACT LOCATION WITH OWNER BEFORE ROUGH-IN.
14. 60A/3P/NF/N1 SAFETY DISCONNECT FOR EXTRACTOR WASHER, FIELD COORDINATE EXACT LOCATION AND ADDITIONAL REQUIREMENTS WITH EQUIPMENT INSTALLER PRIOR TO ROUGH-IN. SAFETY DISCONNECT SHALL BE RATED FOR 5 H.P. MINIMUM.
15. PROVIDE JUNCTION BOX FOR ALERTING SYSTEM DEVICE PROVIDED BY OTHERS. PROVIDE CONDUIT TO ABOVE ACCESSIBLE CEILING AREA. COORDINATE WITH ARCHITECT AND OWNER PRIOR TO ROUGH-IN.
16. VERIFY EXACT NEMA CONFIGURATION WITH EQUIPMENT MANUFACTURER PRIOR TO INSTALLATION.
17. EXTEND CIRCUIT TO INTEGRAL FAN -MOUNTED MOTOR RATED TOGGLE SWITCH. FAN TO BE INTERLOCKED WITH DEDICATED SWITCH/THERMOSTAT IN ASSOCIATED ROOM.
18. GENERATOR DOCKING STATION. REFER TO ELECTRICAL ONE-LINE DIAGRAM FOR ADDITIONAL INFORMATION.
19. COMBINATION MOTOR STARTER/DISCONNECT SWITCH PROVIDED BY DIVISION 23, INSTALLED BY DIVISION 26.
20. FOLDING DOOR MANUFACTURER TO PROVIDE CONTROL PANEL. REFER TO MANUFACTURER SPECIFICATIONS FOR ALL NECESSARY RELAYS AND COMPONENTS FOR A COMPLETE WORKING SYSTEM.
21. PROVIDE 20A RECEPTACLE FOR AIR DRYER(AD-1). COORDINATE EXACT LOCATION WITH DIVISION 23 INSTALLER.
22. PROVIDE 120V POWER FOR TIMESWITCH (TS-1). COORDINATE EXACT LOCATION WITH DIVISION 23 INSTALLER.
23. PROVIDE ROUGH-IN FOR EMERGENCY CALL-BOX AND EXTEND A 1" CONDUIT TO ABOVE ACCESSIBLE CEILING. COORDINATE ROUGH-IN SIZE AND LOCATION WITH OWNER/ARCHITECT AND TECHNOLOGY PRIOR TO ROUGH-IN.

DBR
9601 McAllister Freeway, Suite 410
San Antonio, Texas 78216
210.546.0200 p
210.546.0201 f
TBPE Firm Registration No. 2234

DBR Project Number 196023.000

JC	BV	DA	WJ	JC

TRUE NORTH / PROJECT NORTH

PROFESSIONAL SEAL

STATE OF TEXAS — M. JACQUELINE CHANG — 124987 — LICENSED — PROFESSIONAL ENGINEER — 01/30/2020

LOGO/CONTACT

martinez ARCHITECTS

Martinez Architect, LP
900 Rockmead, Suite 250
Houston, Texas 77339
281.346.7371

DESIGN TEAM

Architectural
Martinez Architects

Civil Engineer
Maverick Engineering

Structural
Matrix Structural engineers

MIE/P/T
DBR

Landscape Architect
KDC Associates

FIRE STATION #5

CITY OF MIDLAND
2200 W GOLF COURSE RD
MIDLAND, TX 79701

PROJECT No: MA 18017
DATE: 01/30/2020

No.	Date	Description
	01/30/2020	100% CD
2	02/20/2020	Addendum 02
4	02/26/2020	Addendum 04

LEVEL 1 POWER PLAN

E201

4.1780

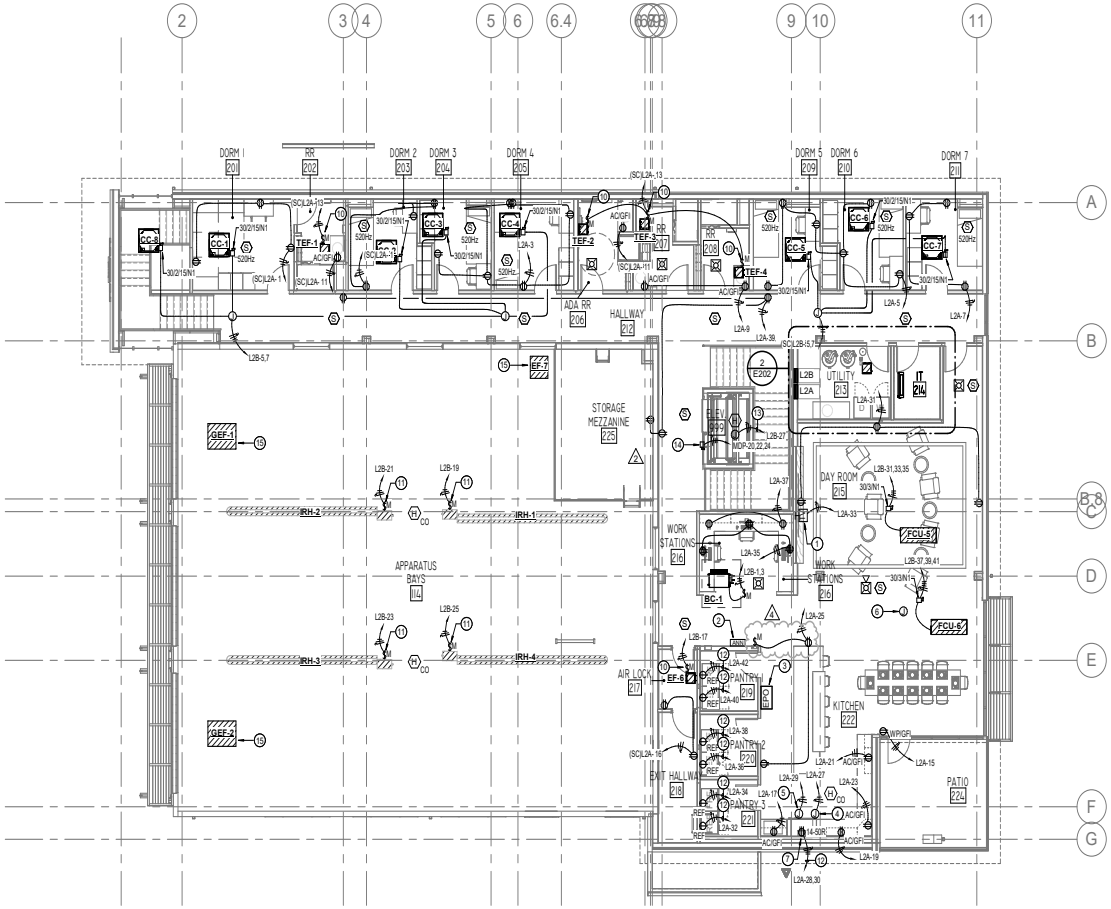

1 E202 **LEVEL 2 POWER PLAN**
1/8" = 1'-0"

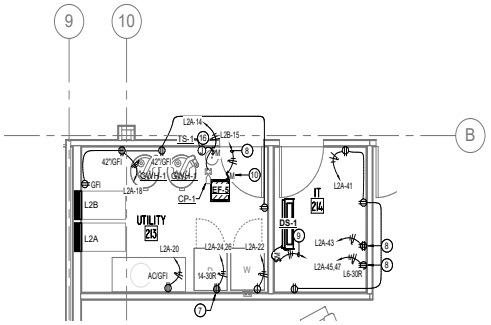

2 E202 **ENLARGED LEVEL 2 POWER PLAN - UTILITY/IT**
1/4" = 1'-0"

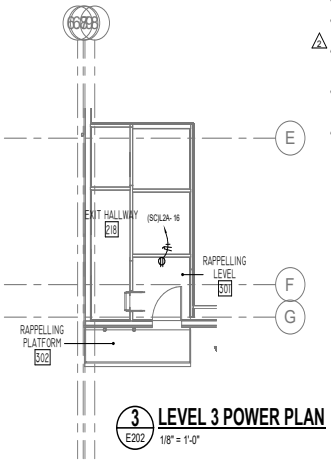

3 E202 **LEVEL 3 POWER PLAN**
1/8" = 1'-0"

ELECTRICAL GENERAL NOTES

A. ELECTRICAL CONTRACTOR SHALL GROUP HOMERUNS WITH THREE HOTS (A,B, AND C PHASE), AND #10 NEUTRAL TO PROVIDE MULTI-WIRE BRANCH CIRCUITS. NO MORE THAN 1 MULTI-WIRE HOMERUNS PER CONDUIT. CONTRACTOR SHALL PROVIDE HANDLE TIES MANUFACTURED BY THE SWITCH GEAR SUPPLIER ON ALL MULTI-WIRE CIRCUITS TO MEET THE REQUIREMENTS OF ARTICLE 210.4(B) OF THE 2017 NEC. AT THE CONTRACTOR'S OPTION, TWO AND THREE POLE BREAKERS MAY BE USED.

B. CONTRACTOR SHALL VERIFY DEVICE LOCATIONS WITH ARCHITECT PRIOR TO ROUGH-IN. REFER TO ARCHITECTURAL CASEWORK AND MILLWORK ELEVATIONS.

C. ELECTRICAL CONTRACTOR SHALL PROVIDE CONDUIT, OUTLET BOXES, JUNCTION BOXES FOR ALL TECHNOLOGY DEVICE OUTLETS. REFER TO DIVISION 26 SPECIFICATIONS AND TECHNOLOGY DRAWINGS FOR ALL WORK REQUIRED.

D. HVAC AND PLUMBING EQUIPMENT MAY DIFFER FROM LOCATIONS AS SHOWN ON ELECTRICAL DRAWINGS. COORDINATE EXACT LOCATIONS WITH MECHANICAL AND PLUMBING CONTRACTOR.

E. ENGRAVE ALL COVER PLATES WITH PANEL NAME AND CIRCUIT NUMBER. PROVIDE SEPARATE PRICE FOR THIS WORK. CONTRACTOR SHALL ARRANGE PANEL BOARDS TO PROVIDE CLEARANCE PER NEC 110.26.

F. ALL SINGLE-PHASE RECEPTACLES RATED 150 VOLTS TO GROUND, OR LESS, 50 AMPERES OR LESS AND THREE-PHASE RECEPTACLES RATED 150 VOLTS TO GROUND OR LESS, 100A OR LESS, IN FOOD SERVICE AREAS, BATHROOMS, ROOFTOPS, OUTDOORS, INDOOR WET LOCATIONS, LOCKER ROOMS, OR CRAWL SPACES SHALL BE GFCI, IN ACCORDANCE WITH NEC 210.8(B).

G. ELECTRICAL CONTRACTOR TO COORDINATE WITH PURVIS INSTALLER FOR ALL REQUIREMENTS PRIOR TO ROUGH-IN.

H. ELECTRICAL CONTRACTOR SHALL PROVIDE CONTACTOR FOR SHUTOFF TO ELECTRIC OVEN. MUST BE TIED INTO PURVIS SYSTEM. MANUAL RESET FOR GAS AND ELECTRICAL SHUTOFFS BY ELECTRICAL CONTRACTOR.

I. ALL EXTERIOR EQUIPMENT SPECIFICALLY THE GENERATOR AND MECHANICAL EQUIPMENT MUST MEET THE TEXAS DEPARTMENT OF INSURANCE WIND LOAD REQUIREMENTS.

ELECTRICAL KEYED NOTES

1. POWER AND A/V OUTLETS FOR WALL MOUNTED TELEVISION. FIELD COORDINATE EXACT LOCATION WITH ARCHITECT/OWNER PRIOR TO ROUGH-IN. COORDINATE PURVIS SYSTEM WITH TECHNOLOGY DRAWINGS.
2. FIRE ALARM REMOTE ANNUNCIATOR. COORDINATE EXACT LOCATION WITH OWNER BEFORE ROUGH-IN.
3. PROVIDE EMERGENCY PUSH BUTTON, BUTTON SHALL DISCONNECT ALL ELECTRICAL CIRCUITS SERVING ABOVE COUNTER RECEPTACLES, RANGE, MICROWAVE AND SHUT GAS DOWN SERVING RANGE. FIELD COORDINATE EXACT LOCATION WITH ARCHITECT/OWNER PRIOR TO ROUGH-IN.
4. 120V JUNCTION BOX CONNECTION FOR RANGE HOOD LIGHTS AND FAN. FIELD COORDINATE EXACT LOCATION AND ADDITIONAL REQUIREMENTS WITH ARCHITECT/OWNER PRIOR TO ROUGH-IN. PROVIDE ADA COMPLIANT SWITCHES FOR HOOD AND HOOD LIGHT.
5. PROVIDE POWER FOR FIRE SUPPRESSION SYSTEM. SYSTEM IS TO BE TIED INTO FIRE ALARM CONTROL PANEL.
6. PROVIDE JUNCTION BOX FOR ALERTING SYSTEM DEVICE PROVIDED BY OTHERS. PROVIDE CONDUIT TO ABOVE ACCESSIBLE CEILING AREA. COORDINATE WITH ARCHITECT AND OWNER PRIOR TO ROUGH-IN.
7. VERIFY EXACT NEMA CONFIGURATION WITH EQUIPMENT MANUFACTURER PRIOR TO INSTALLATION.
8. PROVIDE (1) 30A @208V SPECIAL RECEPTACLE AND (1) QUAD 5-20R RECEPTACLES INSIDE IT ROOM. FIELD COORDINATE EXACT LOCATION AND NEMA CONFIGURATION OF SPECIAL RECEPTACLE WITH TECHNOLOGY CONTRACTOR PRIOR TO ROUGH-IN.
9. MINI-SPLIT INDOOR EVAPORATOR UNIT SHALL RECEIVE POWER FROM ASSOCIATED ROOFTOP CONDENSING UNIT WITH FIELD SUPPLIED WIRING.
10. EXTEND CIRCUIT TO INTEGRAL FAN -MOUNTED MOTOR RATED TOGGLE SWITCH. FAN TO BE INTERLOCKED WITH DEDICATED SWITCH/THERMOSTAT IN ASSOCIATED ROOM.
11. PROVIDE CONNECTION TO INFRARED HEATER DISCONNECT SWITCH, PROVIDED BY DIVISION 23. COORDINATE EXACT LOCATION OF DISCONNECT SWITCH WITH MECHANICAL.
12. EXTEND APPLIANCE CIRCUIT THROUGH GFI CIRCUIT BREAKER.
13. PROVIDE CONNECTION TO ELEVATOR CAB LIGHTS/FAN/RECEPTACLE. COORDINATE EXACT LOCATION WITH ELEVATOR INSTALLER.
14. PROVIDE 200A/125A-FUSED BUSSMANN ELEVATOR DISCONNECT MODULE FOR ELEVATOR CONTROLLER CONNECTION. PROVIDE WITH FIRE ALARM AND RECALL INTERFACE. COORDINATE EXACT LOCATION WITH ELEVATOR INSTALLER.
15. REFER TO SHEET E201 FOR COMBINATION MOTOR STARTER/DISCONNECT SWITCH LOCATION. MOTOR START/DISCONNECT SWITCH PROVIDED BY DIVISION 23, INSTALLED BY DIVISION 26.
16. PROVIDE 120V POWER FOR TIMESWITCH (TS-1). COORDINATE EXACT LOCATION WITH DIVISION 22 INSTALLER.

TRUE NORTH / PROJECT NORTH

DBR
9601 McAllister Freeway, Suite 410
San Antonio, Texas 78216
210.546.0200 p
210.546.0201 f
TBPE Firm Registration No. 2234

DBR Project Number 196023.000

JC	BV	DA	WJ	JC

PROFESSIONAL SEAL

STATE OF TEXAS
M. JACQUELINE CHANG
124987
LICENSED
PROFESSIONAL ENGINEER
02/01/2020

LOGO/CONTACT

martinez ARCHITECTS

Martinez Architect, LP
900 Rockmead, Suite 250
Houston, Texas 77339
281.346.7371

DESIGN TEAM

Architectural
Martinez Architects

Civil Engineer
Maverick Engineering

Structural
Matrix Structural engineers

MEP/FP/T
DBR

Landscape Architect
KDC Associates

FIRE STATION #5

CITY OF MIDLAND
2200 W GOLF COURSE RD
MIDLAND, TX 79701

PROJECT No: **MA 18017**
DATE: **01/30/2020**

No.	Date	Description
	01/30/2020	100% CD
2	02/20/2020	Addendum 02
4	02/26/2020	Addendum 04

LEVEL 2 & 3 POWER PLAN

E202

4.1781

Panelboard MDP

42000 AIC Rating
X New
Existing

120/208 Wye Volt, 3 Phase, 4 Wire
1 Section
Type 1 -Nema Rating

Mains Type: MLO

0 A MCB
600 A BUS (Copper)
ISO. GRND. BUS

X Single
Double
Feed - Thru

Mounting
X Surface
Flush

Note	Load...	Type	Description	Wire	CB	CKT	CB	Wire	Description	Type	Load...	N...
						1 2						
	26890 VA	L; R; EL; M	Electrical Panel L1A	4/0	225 A	3 4	225 A	4/0	Electrical Panel L1B	F; H; MT; M	67224 VA	
						5 6						
	34721 VA	L; R; SP; MT; M	Electrical Panel L2A	12	20 A	7 8	225 A	4/0	Electrical Panel L2B	SP; F; C; H; M	35415 VA	
						9 10						
						11 12						
	9114 VA	MT	Air Compressor	8	50 A	13 14	100 A	3	Cascade Machine: Shop 105	MT	22336 VA	
						15 16						
						17 18						
	3963 VA	F	Exhaust Fan: EF-7	8	35 A	19 20	125 A	1	Bussmann Elevator Module	E	16212 VA	
						21 22						
						23 24						
	--	--	Space	--	--	25 26	--	--	Space	--	--	
	--	--	Space	--	--	27 28	--	--	Space	--	--	
	--	--	Space	--	--	29 30	--	--	Space	--	--	
	--	--	Space	--	--	31 32	--	--	Space	--	--	
	--	--	Space	--	--	33 34	--	--	Space	--	--	
	--	--	Space	--	--	35 36	--	--	Space	--	--	
	--	--	Space	--	--	37 38						
	--	--	Space	--	--	39 40	60 A	6	SPD1	SP	0 VA	
	--	--	Space	--	--	41 42						

N.E.C. (2017)	Load Type	Conn.	Fct.	Diversity	N.E.C.(2017)	Load Type	Conn.	Fct.	Diversity
220.44	(R)Receptacle	34760 VA	64.38%	22380 VA	210.20(a)	(L)Lighting	7045 VA	125.00%	8807 VA
220.56	(K)Kitchen					(EL)Ext. Ltg.	1096 VA	125.00%	1370 VA
220.60	(C)Cooling	38442 VA	100.00%	0 VA	620.14	(E)Elevators	16212 VA	100.00%	16212 VA
220.60	(H)Heating	54848 VA	100.00%	54848 VA		(WH)Wat. Htr.			
220.60	(F)Fans	1638 VA	100.00%	1638 VA	220.5	(MT)Lrg. Motor	43926 VA	112.71%	49510 VA
	(M)Misc.	23720 VA	100.00%	23720 VA		(SP)Sub Pnl.	0 VA	Not Computed	0 VA

Total Connected Load: 218098 VA VA = 605 A
Total Load (Diversified): 174912 VA VA = 486 A

Location of Panel: ELECTRICAL 107

Panelboard L1A

22000 AIC Rating
X New
Existing

120/208 Wye Volt, 3 Phase, 4 Wire
1 Section
Type 1 -Nema Rating

Mains Type: MLO

0 A MCB
225 A BUS (Copper)
ISO. GRND. BUS

X Single
Double
Feed - Thru

Mounting
X Surface
Flush

Note	Load...	Type	Description	Wire	CB	CKT	CB	Wire	Description	Type	Load...	N...
	720 VA	R	Receptacles: Exterior Perimeter	12	20 A	1 2	20 A	12	Lighting: Flagpole	EL	228 VA	
	360 VA	R	Receptacles: Exterior Perimeter	12	20 A	3 4	20 A	12	Lighting: Exterior Egress	EL	104 VA	
	360 VA	R	Receptacles: Exterior Perimeter	12	20 A	5 6	20 A	12	Lighting: Exterior Perimeter	EL	112 VA	
	360 VA	R	Receptacles: Exterior Perimeter	12	20 A	7 8	20 A	12	Lighting: Patio	L	424 VA	
	180 VA	R	Air Dryer	12	20 A	9 10	20 A	12	Lighting: Apparatus Bay Flashers	L	36 VA	
	--	--	Spare	--	20 A	11 12	20 A	12	Lighting: First Level	L	1250 VA	
	1080 VA	R	Turnout Timers	12	20 A	13 14	20 A	12	Lighting: Monument Sign	EL	600 VA	
	360 VA	R	Receptacles: Apparatus Bay	12	20 A	15 16	20 A	12	Lighting: Exterior	EL	52 VA	
	540 VA	R	Receptacles: Apparatus Bay	12	20 A	17 18	20 A	12	Receptacle: Elevator Pit	L; R	244 VA	
	1200 VA	M	Cord Reel: Apparatus Bay	12	20 A	19 20	20 A	12	FACP: Electrical 107	M	500 VA	1
	1200 VA	M	Cord Reel: Apparatus Bay	12	20 A	21 22	20 A	12	Lighting Relay Panel	M	500 VA	
	2400 VA	M	Cord Reel: Apparatus Bay	12	20 A	23 24	20 A	12	Receptacles: Electrical 107	R	540 VA	
	--	--	Spare	--	20 A	25 26	20 A	12	Washer: Utility 112	R	180 VA	
	--	--	Spare	--	20 A	27 28						
	780 VA	R	Receptacles: Utility 112	12	20 A	29 30	30 A	10	Dryer: Utility 112	M	2000 VA	
	1000 VA	R	Treadmill: Exercise 115	12	20 A	31 32	20 A	12	Receptacles: Entry 101	R	720 VA	
	1000 VA	R	Treadmill: Exercise 115	12	20 A	33 34	20 A	12	Computers: Office 110	R	1080 VA	
	1000 VA	R	Treadmill: Exercise 115	12	20 A	35 36	20 A	12	Receptacles: Office 110	R	540 VA	
	1000 VA	R	Stair Climber: Exercise 115	12	20 A	37 38	20 A	12	Printer: Air Lock 113	R	180 VA	
	1000 VA	R	Stair Climber: Exercise 115	12	20 A	39 40	20 A	12	Zetron Power: Air Lock 113	R	180 VA	
	360 VA	M	TV: Exercise 115	12	20 A	41 42	20 A	12	Receptacles: Shop 105	R	360 VA	
	360 VA	M	TV: Exercise 115	12	20 A	43 44	20 A	12	R Room 124, 109	R	540 VA	
	720 VA	R	Receptacles: Exercise 115	12	20 A	45 46	20 A	12	Receptacles: Shop 105	R	360 VA	
	--	--	Spare	--	20 A	47 48	20 A	12	Fire/Smoke Damper	M	180 VA	
	--	--	Space	--	--	49 50	--	--	Space	--	--	
	--	--	Space	--	--	51 52	--	--	Space	--	--	
	--	--	Space	--	--	53 54	--	--	Space	--	--	

N.E.C. (2017)	Load Type	Conn.	Fct.	Diversity	N.E.C.(2017)	Load Type	Conn.	Fct.	Diversity
220.44	(R)Receptacle	15320 VA	82.64%	12660 VA	210.20(a)	(L)Lighting	1774 VA	125.00%	2218 VA
220.56	(K)Kitchen					(EL)Ext. Ltg.	1096 VA	125.00%	1370 VA
220.60	(C)Cooling			0 VA	620.14	(E)Elevators			
220.60	(H)Heating			0 VA		(WH)Wat. Htr.			
220.60	(F)Fans				220.5	(MT)Lrg. Motor			
	(M)Misc.	8200 VA	100.00%	8200 VA		(SP)Sub Pnl.			

Total Connected Load: 26390 VA VA = 73 A
Total Load (Diversified): 24448 VA VA = 68 A

Location of Panel: ELECTRICAL 107

Panelboard L1B

22000 AIC Rating
X New
Existing

120/208 Wye Volt, 3 Phase, 4 Wire
1 Section
Type 1 -Nema Rating

Mains Type: MLO

0 A MCB
225 A BUS (Copper)
ISO. GRND. BUS

X Single
Double
Feed - Thru

Mounting
X Surface
Flush

Note	Load...	Type	Description	Wire	CB	CKT	CB	Wire	Description	Type	Load...	N...
	700 VA	M	Security Gate/Card Reader	12	20 A	1 2						
	700 VA	M	Security Gate/Card Reader	12	20 A	3 4	30 A	10	Generator Jacket Heater	H	4000 VA	
	141 VA	F	Exhaust Fan: EF-1	12	20 A	5 6	20 A	12	Generator Condensation Heater	M	1000 VA	
	696 VA	F	Exhaust Fan: EF-2	12	20 A	7 8	20 A	12	Generator Battery Charger	M	1200 VA	
	141 VA	F	Exhaust Fan: EF-3	12	15 A	9 10	20 A	--	Spare	--	--	
	180 VA	F	Exhaust Fan: EF-4	12	15 A	11 12	20 A	--	Spare	--	--	
	500 VA	M	Folding Bay Door Controller	12	20 A	13 14	20 A	12	Elevator Sump Pump	MT	1176 VA	
	3000 VA	MT	Folding Bay Door	12	15 A	15 16	25 A	10	Unit Heater: EUH-1	H	3750 VA	
						17 18						
						19 20	20 A	12	Unit Heater: EUH-2	H	3750 VA	
	3000 VA	MT	Folding Bay Door	12	15 A	21 22						
						23 24						
						25 26	30 A	10	Fan/Coil: FCU-1	H	7664 VA	
	3000 VA	MT	Folding Bay Door	12	15 A	27 28						
						29 30	25 A	10	Fan/Coil: FCU-2	H	3588 VA	
						31 32						
	900 VA	F	Garage Exhaust Fan: GEF-1	12	15 A	33 34	30 A	10	Fan/Coil: FCU-3	H	7664 VA	
						35 36						
						37 38						
	900 VA	F	Garage Exhaust Fan: GEF-2	12	15 A	39 40	30 A	10	Fan/Coil: FCU-4	H	7664 VA	
						41 42						
						43 44						
	500 VA	M	Exhaust Fan EF-7 Controller	12	20 A	45 46	60 A	6	Washer/Extractor: Utility 112	MT	10800 VA	
	430 VA	MT; M	Circulation Pump CP-1: Utility 112	12	15 A	47 48						
	180 VA	M	Ice Machine: Utility 112	12	20 A	49 50	--	--	Space	--	--	
	--	--	Space	--	--	51 52	--	--	Space	--	--	
	--	--	Space	--	--	53 54	--	--	Space	--	--	

N.E.C. (2017)	Load Type	Conn.	Fct.	Diversity	N.E.C.(2017)	Load Type	Conn.	Fct.	Diversity
220.44	(R)Receptacle				210.20(a)	(L)Lighting			
220.56	(K)Kitchen					(EL)Ext. Ltg.			
220.60	(C)Cooling			0 VA	620.14	(E)Elevators			
220.60	(H)Heating	38080 VA	100.00%	38080 VA		(WH)Wat. Htr.			
220.60	(F)Fans	1158 VA	100.00%	1158 VA	220.5	(MT)Lrg. Motor	12226 VA	122.08%	14926 VA
	(M)Misc.	4960 VA	100.00%	4960 VA		(SP)Sub Pnl.			

Total Connected Load: 56424 VA VA = 157 A
Total Load (Diversified): 59124 VA VA = 164 A

Location of Panel: ELECTRICAL 107

Panelboard L2A

22000 AIC Rating
X New
Existing

120/208 Wye Volt, 3 Phase, 4 Wire
1 Section
Type 1 -Nema Rating

Mains Type: MLO

0 A MCB
225 A BUS (Copper)
ISO. GRND. BUS

X Single
Double
Feed - Thru

Mounting
Surface
X Flush

Note	Load...	Type	Description	Wire	CB	CKT	CB	Wire	Description	Type	Load...	N...
	1080 VA	R	Receptacles: Dorms 1 & 2	12	20 A	1 2	20 A	12	Lighting: Corridor/Stairs/Pantry	L	1637 VA	
	1080 VA	R	Receptacles: Dorms 3 & 4	12	20 A	3 4	20 A	12	Lighting: Sleeping Units	L	748 VA	
	1080 VA	R	Receptacles: Dorms 5 & 6	12	20 A	5 6	20 A	12	Lighting: Kitchen/Dining/Day Rm	L	1017 VA	
	540 VA	R	Receptacles: Dorm 7	12	20 A	7 8	20 A	12	Lighting: Apparatus Bay	L	339 VA	
	360 VA	R	Receptacles: RR 207 & 208	12	20 A	9 10	20 A	12	Lighting: Apparatus Bay	L	765 VA	
	360 VA	R	Receptacles: RR 202 & 206	12	20 A	11 12	20 A	12	Lighting: Apparatus Bay	L	765 VA	
	240 VA	R	RR Exhaust Fans	12	20 A	13 14	15 A	12	Circulation Pump CP-1: Utility 213	MT; M	430 VA	
	180 VA	R	Receptacle: Patio 224	12	20 A	15 16	20 A	12	Receptacles: Repelling Area	R	540 VA	
	180 VA	R	Kitchen: Appliance #1	12	20 A	17 18	20 A	12	Receptacles: Utility 213	R	720 VA	
	180 VA	R	Kitchen: Appliance #2	12	20 A	19 20	20 A	12	Receptacle: Utility 213	R	180 VA	
	180 VA	R	Kitchen: Appliance #3	12	20 A	21 22	20 A	12	Washer: Utility 213	R	1200 VA	
	180 VA	R	Kitchen: Appliance #4	12	20 A	23 24	20 A	12	Dryer: Utility 213	M	180 VA	
	360 VA	R; M	Receptacles: Kitchen 222	12	20 A	25 26						
	500 VA	M	Range Hood	12	20 A	27 28	50 A	8	Electric Range	M	6000 VA	
	540 VA	M	Fire Suppression System	12	20 A	29 30						
	540 VA	R	Receptacles: Day Room 215	12	20 A	31 32	20 A	12	Refrigerator: Pantry 3	R	1200 VA	
	360 VA	M	TV: Day Room 215	12	20 A	33 34	20 A	12	Refrigerator: Pantry 3	R	1200 VA	
	1080 VA	R	Computers: Work Stations 216	12	20 A	35 36	20 A	12	Refrigerator: Pantry 2	R	1200 VA	
	360 VA	R	Receptacles: Work Stations 216	12	20 A	37 38	20 A	12	Refrigerator: Pantry 2	R	1200 VA	
	720 VA	R	Receptacles: Hallways	12	20 A	39 40	20 A	12	Refrigerator: Pantry 1	R	1200 VA	
	540 VA	R	Receptacles: IT 214	12	20 A	41 42	20 A	12	Refrigerator: Pantry 1	R	1200 VA	
	360 VA	R	IT Receptacle: IT 214	12	20 A	43 44	20 A	--	Spare	--	--	
	2000 VA	M	IT Receptacle: IT 214	10	30 A	45 46	20 A	--	Spare	--	--	
						47 48	20 A	--	Spare	--	--	
	--	--	Space	--	--	49 50						
	--	--	Space	--	--	51 52	30 A	10	SPD2	SP	0 VA	
	--	--	Space	--	--	53 54						

N.E.C. (2017)	Load Type	Conn.	Fct.	Diversity	N.E.C.(2017)	Load Type	Conn.	Fct.	Diversity
220.44	(R)Receptacle	19440 VA	75.72%	14720 VA	210.20(a)	(L)Lighting	5271 VA	125.00%	6589 VA
220.56	(K)Kitchen					(EL)Ext. Ltg.			
220.60	(C)Cooling			0 VA	620.14	(E)Elevators			
220.60	(H)Heating			0 VA		(WH)Wat. Htr.			
220.60	(F)Fans				220.5	(MT)Lrg. Motor	250 VA	125.00%	313 VA
	(M)Misc.	9760 VA	100.00%	9760 VA		(SP)Sub Pnl.	0 VA	Not Computed	0 VA

Total Connected Load: 34721 VA VA = 96 A
Total Load (Diversified): 31382 VA VA = 87 A

Location of Panel: UTILITY 213

Panelboard L2B

22000 AIC Rating
X New
Existing

120/208 Wye Volt, 3 Phase, 4 Wire
1 Section
Type 1 -Nema Rating

Mains Type: MLO

100 A MCB
100 A BUS (Copper)
ISO. GRND. BUS

X Single
Double
Feed - Thru

Mounting
Surface
X Flush

Note	Load...	Type	Description	Wire	CB	CKT	CB	Wire	Description	Type	Load...	N...
	180 VA	C	VRV Branch Selector Box	12	15 A	1 2						
						3 4	15 A	12	Split System DS/DSCU-1	C	2521 VA	
	720 VA	C	VRF CC Units 1-8	12	20 A	5 6						
						7 8						
	8214 VA	C	VRF-CU-1	8	40 A	9 10	25 A	10	Condensing Unit ACCU-1	C	3840 VA	
						11 12						
						13 14	20 A	12	Condensing Unit ACCU-2	C	3570 VA	
	240 VA	F	Exhaust Fan: EF-5	12	20 A	15 16						
	240 VA	F	Exhaust Fan: EF-6	12	15 A	17 18	20 A	12	Condensing Unit ACCU-3	C	3570 VA	
	360 VA	H	Infrared Heater IRH-1	12	20 A	19 20						
	360 VA	H	Infrared Heater IRH-2	12	20 A	21 22	20 A	--	Spare	--	--	
	360 VA	H	Infrared Heater IRH-3	12	20 A	23 24	20 A	--	Spare	--	--	
	360 VA	H	Infrared Heater IRH-4	12	20 A	25 26						
	800 VA	M	Elevator Cab...	12	20 A	27 28	25 A	10	Condensing Unit ACCU-4	C	3840 VA	
						29 30						
						31 32						
	7664 VA	H	Fan/Coil: FCU-5	10	30 A	33 34	25 A	10	Condensing Unit ACCU-5	C	3840 VA	
						35 36						
						37 38						
	7664 VA	H	Fan/Coil: FCU-6	10	30 A	39 40	25 A	10	Condensing Unit ACCU-6	C	3840 VA	
						41 42						
	--	--	Spare	--	20 A	43 44	20 A	--	Spare	--	--	
	--	--	Spare	--	20 A	45 46	20 A	--	Spare	--	--	
	--	--	Spare	--	20 A	47 48	20 A	--	Spare	--	--	
	--	--	Spare	--	20 A	49 50						
	--	--	Spare	--	20 A	51 52	30 A	10	SPD2	SP	0 VA	
	--	--	Spare	--	20 A	53 54						

N.E.C. (2017)	Load Type	Conn.	Fct.	Diversity	N.E.C.(2017)	Load Type	Conn.	Fct.	Diversity
220.44	(R)Receptacle				210.20(a)	(L)Lighting			
220.56	(K)Kitchen					(EL)Ext. Ltg.			
220.60	(C)Cooling	38442 VA	100.00%	38442 VA	620.14	(E)Elevators			
220.60	(H)Heating	16768 VA	100.00%	0 VA		(WH)Wat. Htr.			
220.60	(F)Fans	480 VA	100.00%	480 VA	220.5	(MT)Lrg. Motor			
	(M)Misc.	800 VA	100.00%	800 VA		(SP)Sub Pnl.	0 VA	Not Computed	0 VA

Total Connected Load: 55096 VA VA = 153 A
Total Load (Diversified): 38328 VA VA = 106 A

Location of Panel: UTILITY 213

PANEL SCHEDULE NOTES

1. PROVIDE HANDLE TIE FOR FIRE ALARM CONTROL PANEL.
2. PROVIDE GFI CIRCUIT BREAKER FOR APPLIANCE CIRCUIT.

DBR
9601 McAllister Freeway, Suite 410
San Antonio, Texas 78216
210.546.0200 p
210.546.0201 f
TBPE Firm Registration No. 2234

DBR Project Number 196023.000

JC	BV	DA	WJ	JC

PROFESSIONAL SEAL

STATE OF TEXAS
M. JACQUELINE CHANG
124987
LICENSED
PROFESSIONAL ENGINEER
01/30/2020

LOGO/CONTACT

martinez ARCHITECTS

Martinez Architect, LP
900 Rockmead, Suite 250
Houston, Texas 77339
281.346.7371

DESIGN TEAM

Architectural
Martinez Architects

Civil Engineer
Maverick Engineering

Structural
Matrix Structural engineers

MEP/FP/T
DBR

Landscape Architect
KDC Associates

FIRE STATION #5

CITY OF MIDLAND
2200 W GOLF COURSE RD
MIDLAND, TX 79701

PROJECT No: **MA 18017**
DATE: **01/30/2020**

No.	Date	Description
	01/30/2020	100% CD
2	02/20/2020	Addendum 02
4	02/26/2020	Addendum 04

ELECTRICAL SCHEDULES

E502

4.1782

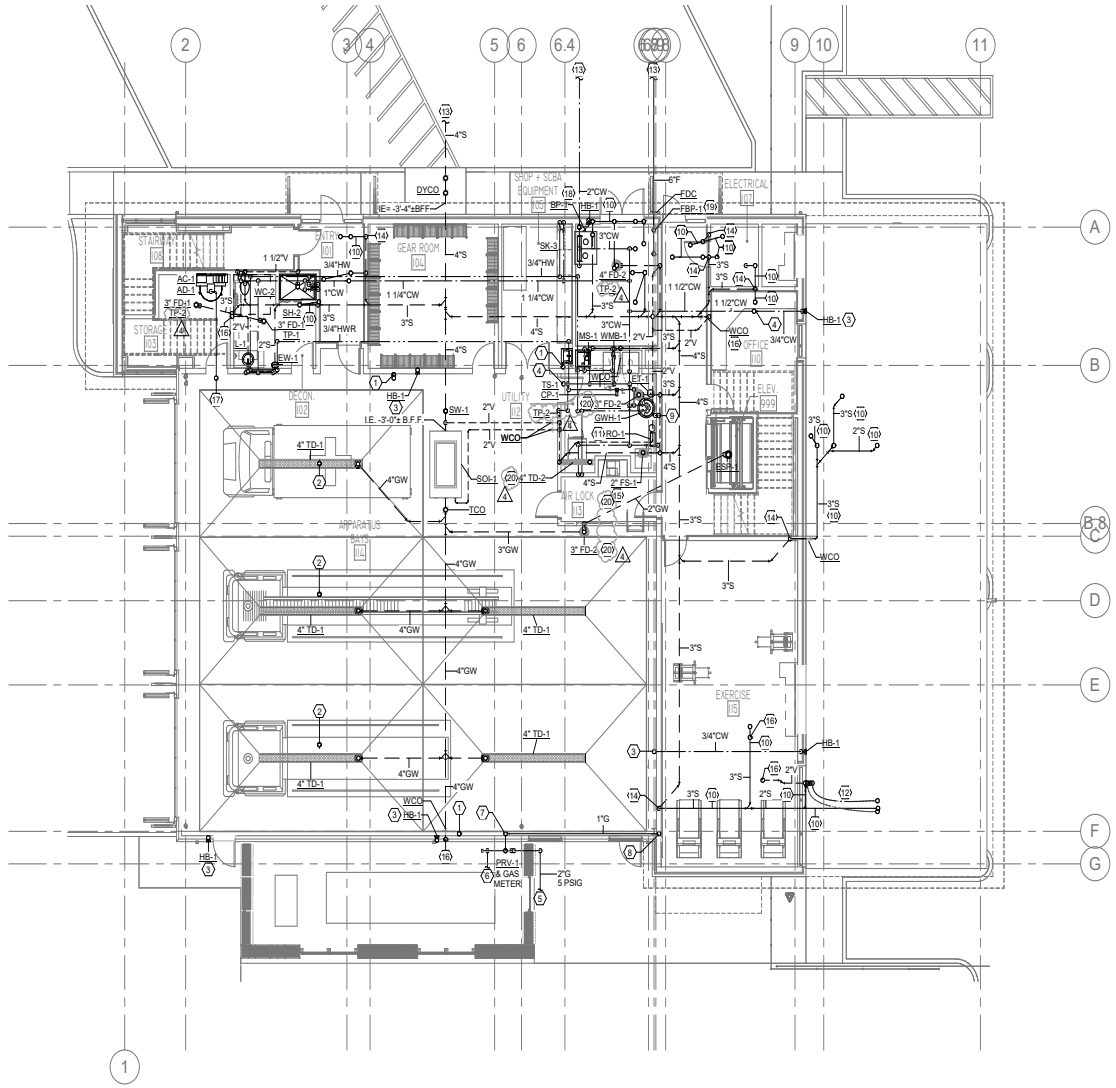

1 P211 **LEVEL 1 PLUMBING PLAN**
1/8" = 1'-0"

GENERAL PLUMBING NOTES

A ALL WORK, METHODS AND INSTALLATIONS INVOLVED IN THE PLUMBING DESIGN SHALL BE IN ACCORDANCE WITH THE PREVAILING BUILDING CODES AND INSPECTION REGULATIONS AND ALL OTHER OFFICIALS HAVING JURISDICTION.

B PRIOR TO CONSTRUCTION, THE CONTRACTOR IS RESPONSIBLE FOR OBTAINING A COPY OF THE OWNER'S MOST RECENT STANDARDS AND REQUIREMENTS FOR CONSTRUCTION. ALL WORK SHALL BE PERFORMED IN ACCORDANCE WITH SUCH REQUIREMENTS, UNLESS THE PREVAILING CODE OR THESE DOCUMENTS INDICATE A HIGHER STANDARD, WHICH SHALL GOVERN.

C COORDINATE ROUTING OF PIPING IN CEILING SPACES WITH MECHANICAL AND ELECTRICAL EQUIPMENT, DUCTWORK AND CONDUIT. NOTIFY THE ARCHITECT/ENGINEER OF ANY CONFLICTS PRIOR TO INSTALLING AN ALTERNATE PIPING PLAN.

D DO NOT ROUGH-IN FOR FIXTURES FROM THESE DRAWINGS. REFER TO LATEST ARCHITECTURAL DRAWINGS FOR DIMENSIONED LOCATIONS.

E ALL PLUMBING FIXTURE AND DEVICE LOCATIONS AND MOUNTING HEIGHTS SHALL BE COORDINATED IN ADVANCE WITH CASEWORK, MILLWORK, ETC.

F COORDINATE FIXTURE AND EQUIPMENT LOCATIONS AND CONNECTION REQUIREMENTS WITH LATEST ARCHITECTURAL DRAWINGS, SPECIFICATIONS, AND MANUFACTURER RECOMMENDATIONS PRIOR TO ANY ROUGH-INS.

G PROVIDE CLEANOUTS, POINT OF USE WATER HEATERS, WATER FILTERS, ETC. IN ACCESSIBLE, BUT NOT IMMEDIATELY VISIBLE LOCATIONS. REFER TO AND COORDINATE WITH ARCHITECTURAL DRAWINGS FOR DIMENSIONS AND DETAILS OF SINK SKIRTS, ADA PANELS, AND MILLWORK.

H ALL PIPING SHALL BE ROUTED CONCEALED FROM PUBLIC VIEW.

J ENSURE THAT PIPING ROUTED IN CEILING SPACE IS AT AN ELEVATION ABOVE THE TOP OF WINDOW FRAME HEADS. ENSURE THAT PIPING ROUTED LOW INSIDE WALLS IS BELOW THE ELEVATION OF WINDOW SILLS. PROVIDE OFFSETS IN PIPING AS REQUIRED.

K ALL VALVES, EQUIPMENT, AND OPERABLE APPURTENANCES SHALL BE LOCATED FREE FROM OBSTRUCTIONS FOR FULL OPERABILITY AND MAINTENANCE ACCESS.

L ALL PIPING PROVIDED WITHIN RETURN AIR CEILING SPACES SHALL BE PLENUM RATED.

M INSTALLATIONS WHICH DO NOT ADHERE TO THE REQUIREMENTS INDICATED WITHIN THE CONTRACT DOCUMENTS OR WHICH ARE INCORRECT DUE TO LACK OF FIELD COORDINATION, ETC. SHALL BE CORRECTED SOLELY AT THE CONTRACTOR'S EXPENSE, WITH NO EXCEPTIONS.

N PROVIDE BALL VALVE SHUT-OFFS ON ALL DOMESTIC WATER BRANCH LINES WITHIN 24" OF THE CORRESPONDING MAIN.

P ALL DOMESTIC WATER AND SANITARY VENT LINES SERVING FIXTURE GROUPS SHALL HAVE A FULL SIZE HEADER THAT RUNS THE LENGTH OF THE CHASE/WALL SPACE FOR CONNECTION TO ALL FIXTURES. REFER TO PLANS FOR HEADER SIZES, WHICH MAY BE INDICATED BY THE VERTICAL DROP OR RISE UP FROM THE CHASE. REFER TO PLUMBING FIXTURE SCHEDULE FOR INDIVIDUAL FIXTURE ROUGH-IN CONNECTION SIZES TO HEADER.

Q VENT HEADERS WITHIN WALLS AND CHASES FOR MULTIPLE FIXTURES SHALL BE PROVIDED AT NO LESS THAN 6" ABOVE THE FLOOD RIM OF THE HIGHEST FIXTURE.

R FOR EACH FIXTURE INTENDED TO DRAIN INDIRECTLY, PROVIDE THE CODE REQUIRED INDIRECT WASTE PIPE (AND TRAP OR TRAP AND VENT, AS NECESSARY) TO ROUTE THE DRAIN LINE TO THE NEAREST APPROVED INDIRECT WASTE RECEPTOR WITHOUT POSING A TRIP HAZARD. IN FINISHED AREAS ALL SUCH DRAIN LINES SHALL BE CHROME PLATED CAST BRASS.

S FOR FLOOR MOUNTED WATER HEATERS AND SIMILAR EQUIPMENT, PROVIDE A RECTANGULAR SHAPED 4" THICK CONCRETE HOUSEKEEPING PAD EXTENDING TO BEYOND THE LIMITS OF THE EQUIPMENT FOOTPRINT.

T PROVIDE AN ACCESSIBLE WALL CLEANOUT AT THE BASE OF EACH SANITARY RISER.

U NO NATURAL GAS VALVES, UNIONS, OR REGULATORS SHALL BE PERMITTED TO BE INSTALLED ABOVE THE CEILING.

V ALL FLOOR DRAINS/FLOOR SINKS SHALL BE PROVIDED WITH A TRAP PRIMER 4

PLUMBING KEYED NOTES

1 1" FIXED AIR DROP. SECURE VERTICAL PIPE TO WALL. VALVE AND CAP END FOR OWNER INSTALLED EQUIPMENT. VERIFY EXACT LOCATION AND HEIGHT WITH OWNER.

2 1-1/2" WATER FILL FROM OVER HEAD. VALVE AND CAP DROP FOR OWNER INSTALLED EQUIPMENT. VERIFY EXACT LOCATION AND HEIGHT WITH OWNER.

3 3/4" COLD WATER DOWN FROM OVER HEAD TO HOSE BIBB.

4 1-1/2" COLD WATER UP TO SECOND FLOOR.

5 2", 5PSIG FROM UTILITY CO. TO METER. REFERENCE CIVIL DRAWINGS FOR CONTINUATION.

6 2", 5PSIG FROM GAS MANIFOLD TO EMERGENCY GENERATOR. COORDINATE ROUTING AND CONNECTION POINT WITH MANUFACTURER.

7 1-1/2", 11'-14" W.C. GAS ENTRY TO BUILDING. PROVIDE SLEEVE AT ALL WALL PENETRATIONS.

8 1" GAS UP TO 2ND FLOOR.

9 3/4" GAS DOWN FROM SECOND FLOOR.

10 SANITARY OVERHEAD.

11 ROUTE FILTERED WATER FROM RO-1 TO ICE MACHINE (FURNISHED BY OWNER).

12 1/2" HOT AND COLD WATER ROUTED UNDER 2ND FLOOR TO SK-2. RE: P212.

13 REFERENCE CIVIL DRAWINGS FOR CONTINUATION.

14 SANITARY FROM ABOVE AND DOWN.

15 COORDINATE EXACT LOCATION WITH ICE MACHINE PROVIDED BY OWNER.

16 2" VENT UP.

17 2" COMPRESSED AIR UP; ROUTE AS HIGH AS POSSIBLE IN APPARATUS BAYS.

18 ROUTE 2" COLD WATER TO DOMESTIC BOOSTER PUMP. RE: 8/P602.

19 ROUTE 6" FIRE WATER TO FIRE PUMP. RE: 6/P602.

20 CONNECT DRAIN TO ELECTRONIC TRAP PRIMER (TP-2). 4

DBR
9601 McAllister Freeway, Suite 410
San Antonio, Texas 78216
210.546.0200 p
210.546.0201 f
TBPE Firm Registration No. 2234

DBR Project Number 196023.000

JC | BV | DA | WJ | JC

TRUE NORTH PROJECT NORTH

PROFESSIONAL SEAL

STATE OF TEXAS
M. JACQUELINE CHANG
124987
LICENSED
PROFESSIONAL ENGINEER
01/30/2020

LOGO/CONTACT

martinez ARCHITECTS

Martinez Architect, LP
900 Rockmead, Suite 250
Houston, Texas 77339
281.346.7371

DESIGN TEAM

Architectural
Martinez Architects

Civil Engineer
Maverick Engineering

Structural
Matrix Structural engineers

MEP/FP
DBR

Landscape Architect
KDC Associates

FIRE STATION #5

CITY OF MIDLAND
2200 W GOLF COURSE RD
MIDLAND, TX 79701

PROJECT No: **MA 18017**
DATE: **01/30/2020**

No.	Date	Description
	01/30/2020	100% CD
4	02/26/2020	Addendum 04

LEVEL 1
PLUMBING PLAN

P211

4.1783

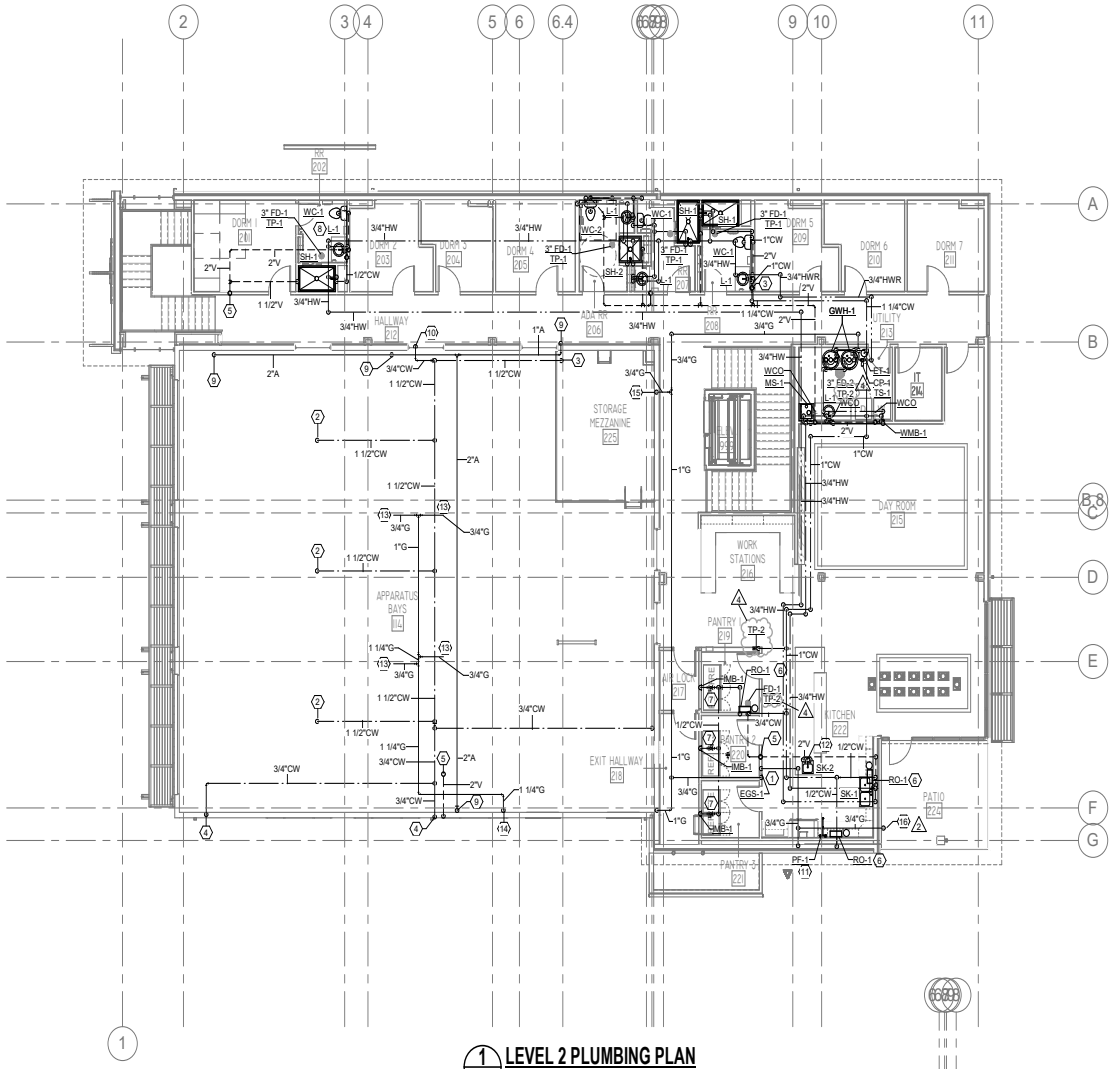

1 LEVEL 2 PLUMBING PLAN
P212 — 1/8" = 1'-0"

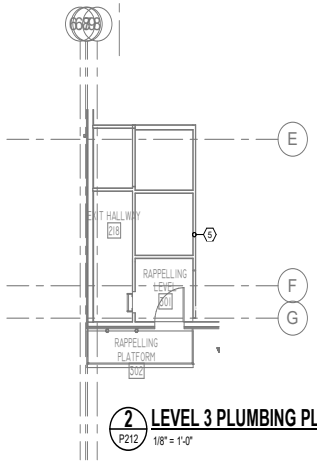

2 LEVEL 3 PLUMBING PLAN
P212 — 1/8" = 1'-0"

GENERAL PLUMBING NOTES

A ALL WORK, METHODS AND INSTALLATIONS INVOLVED IN THE PLUMBING DESIGN SHALL BE IN ACCORDANCE WITH THE PREVAILING BUILDING CODES AND INSPECTION REGULATIONS AND ALL OTHER OFFICIALS HAVING JURISDICTION.

B PRIOR TO CONSTRUCTION, THE CONTRACTOR IS RESPONSIBLE FOR OBTAINING A COPY OF THE OWNER'S MOST RECENT STANDARDS AND REQUIREMENTS FOR CONSTRUCTION. ALL WORK SHALL BE PERFORMED IN ACCORDANCE WITH SUCH REQUIREMENTS, UNLESS THE PREVAILING CODE OR THESE DOCUMENTS INDICATE A HIGHER STANDARD, WHICH SHALL GOVERN.

C COORDINATE ROUTING OF PIPING IN CEILING SPACES WITH MECHANICAL AND ELECTRICAL EQUIPMENT, DUCTWORK AND CONDUIT. NOTIFY THE ARCHITECT/ENGINEER OF ANY CONFLICTS PRIOR TO INSTALLING AN ALTERNATE PIPING PLAN.

D DO NOT ROUGH-IN FOR FIXTURES FROM THESE DRAWINGS. REFER TO LATEST ARCHITECTURAL DRAWINGS FOR DIMENSIONED LOCATIONS.

E ALL PLUMBING FIXTURE AND DEVICE LOCATIONS AND MOUNTING HEIGHTS SHALL BE COORDINATED IN ADVANCE WITH CASEWORK, MILLWORK, ETC.

F COORDINATE FIXTURE AND EQUIPMENT LOCATIONS AND CONNECTION REQUIREMENTS WITH LATEST ARCHITECTURAL DRAWINGS, SPECIFICATIONS, AND MANUFACTURER RECOMMENDATIONS PRIOR TO ANY ROUGH-INS.

G PROVIDE CLEANOUTS, POINT OF USE WATER HEATERS, WATER FILTERS, ETC. IN ACCESSIBLE, BUT NOT IMMEDIATELY VISIBLE LOCATIONS. REFER TO AND COORDINATE WITH ARCHITECTURAL DRAWINGS FOR DIMENSIONS AND DETAILS OF SINK SKIRTS, ADA PANELS, AND MILLWORK.

H ALL PIPING SHALL BE ROUTED CONCEALED FROM PUBLIC VIEW.

J ENSURE THAT PIPING ROUTED IN CEILING SPACE IS AT AN ELEVATION ABOVE THE TOP OF WINDOW FRAME HEADS. ENSURE THAT PIPING ROUTED LOW INSIDE WALLS IS BELOW THE ELEVATION OF WINDOW SILLS. PROVIDE OFFSETS IN PIPING AS REQUIRED.

K ALL VALVES, EQUIPMENT, AND OPERABLE APPURTENANCES SHALL BE LOCATED FREE FROM OBSTRUCTIONS FOR FULL OPERABILITY AND MAINTENANCE ACCESS.

L ALL PIPING PROVIDED WITHIN RETURN AIR CEILING SPACES SHALL BE PLENUM RATED.

M INSTALLATIONS WHICH DO NOT ADHERE TO THE REQUIREMENTS INDICATED WITHIN THE CONTRACT DOCUMENTS OR WHICH ARE INCORECT DUE TO LACK OF FIELD COORDINATION, ETC. SHALL BE CORRECTED SOLELY AT THE CONTRACTOR'S EXPENSE, WITH NO EXCEPTIONS.

N PROVIDE BALL VALVE SHUT-OFFS ON ALL DOMESTIC WATER BRANCH LINES WITHIN 24" OF THE CORRESPONDING MAIN.

P ALL DOMESTIC WATER AND SANITARY VENT LINES SERVING FIXTURE GROUPS SHALL HAVE A FULL SIZE HEADER THAT RUNS THE LENGTH OF THE CHASE/WALL SPACE FOR CONNECTION TO ALL FIXTURES. REFER TO PLANS FOR HEADER SIZES, WHICH MAY BE INDICATED BY THE VERTICAL DROP DOWN OR RISE UP FROM THE CHASE. REFER TO PLUMBING FIXTURE SCHEDULE FOR INDIVIDUAL FIXTURE ROUGH-IN CONNECTION SIZES TO HEADER.

Q VENT HEADERS WITHIN WALLS AND CHASES FOR MULTIPLE FIXTURES SHALL BE PROVIDED AT NO LESS THAN 6" ABOVE THE FLOOD RIM OF THE HIGHEST FIXTURE.

R FOR EACH FIXTURE INTENDED TO DRAIN INDIRECTLY, PROVIDE THE CODE REQUIRED INDIRECT WASTE PIPE (AND TRAP OR TRAP AND VENT, AS NECESSARY) TO ROUTE THE DRAIN LINE TO THE NEAREST APPROVED INDIRECT WASTE RECEPTOR WITHOUT POSING A TRIP HAZARD. IN FINISHED AREAS ALL SUCH DRAIN LINES SHALL BE CHROME PLATED CAST BRASS.

S FOR FLOOR MOUNTED WATER HEATERS AND SIMILAR EQUIPMENT, PROVIDE A RECTANGULAR SHAPED 4" THICK CONCRETE HOUSEKEEPING PAD EXTENDING TO BEYOND THE LIMITS OF THE EQUIPMENT FOOTPRINT.

T PROVIDE AN ACCESSIBLE WALL CLEANOUT AT THE BASE OF EACH SANITARY RISER.

U NO NATURAL GAS VALVES, UNIONS, OR REGULATORS SHALL BE PERMITTED TO BE INSTALLED ABOVE THE CEILING.

V ALL FLOOR DRAINS/FLOOR SINKS SHALL BE PROVIDED WITH A TRAP PRIMER. 4

PLUMBING KEYED NOTES

1. EMERGENCY GAS SHUT-OFF FOR KITCHEN EQUIPMENT (EGS-1). COORDINATE WITH ELECTRICAL. PROVIDE SOLENOID VALVE, RE: 11/P601.
2. 1-1/2" WATER FILL. VALVE AND CAP DROP FOR OWNER INSTALLED EQUIPMENT.
3. 1-1/2" COLD WATER FROM BELOW.
4. COLD WATER DOWN.
5. 2" VENT UP TO ROOF.
6. RO SYSTEM AND STORAGE TANK (RO-1). ROUTE FILTERED WATER TO FIXTURES (PF-1/SK-1/SK-2).
7. ROUTE FILTERED WATER FROM REVERSE OSMOSIS SYSTEM (RO-1) TO WALL BOXES SERVING PANTRY REFRIGERATORS.
8. PROVIDE Y-BRANCH TAIL PIECE FOR CONDENSATE CONNECTION. COORDINATE WITH MECHANICAL.
9. 1" COMPRESSED AIR DROP. SECURE VERTICAL PIPE TO WALL. VALVE AND CAP DROP FOR OWNER INSTALLED EQUIPMENT. VERIFY EXACT LOCATION AND HEIGHT WITH OWNER.
10. 3/4" COLD WATER DROP IN WALL BELOW WINDOW SILL AND DOWN TO HOSE BIBB.
11. ROUTE FILTERED WATER FROM RO-1 TO POT FILLER FIXTURE.
12. ISLAND WASTE/VENT ROUTED UNDER FLOOR TO WALL. RE: 11/P602.
13. 3/4" GAS TO INFRA-RED RADIANT HEATER. RE: M211.
14. 1-1/4" GAS DOWN IN WALL.
15. 3/4" GAS DOWN TO 1ST FLOOR.
16. 3/4" GAS THROUGH WALL AND DROP TO PATIO FOR BBQ GRILL(S). SLEEVE AT PENETRATION. REF: 14/P602. ROUTE PIPE TIGHT TO WALL. PROVIDE VALVE AND CAP AT DROP. PLUMBING 2

TRUE NORTH / PROJECT NORTH

DBR
9601 McAllister Freeway, Suite 410
San Antonio, Texas 78216
210.546.0200 p
210.546.0201 f
TBPE Firm Registration No. 2234

DBR Project Number 196023.000

JC	BV	DA	WJ	JC

PROFESSIONAL SEAL

STATE OF TEXAS
M. JACQUELINE CHANG
124987
LICENSED
PROFESSIONAL ENGINEER
01/30/2020

LOGO/CONTACT

martinez ARCHITECTS

Martinez Architect, LP
900 Rockmead, Suite 250
Houston, Texas 77339
281.346.7371

DESIGN TEAM

Architectural
Martinez Architects

Civil Engineer
Maverick Engineering

Structural
Matrix Structural engineers

MIE/P/T
DBR

Landscape Architect
KDC Associates

FIRE STATION #5

CITY OF MIDLAND
2200 W GOLF COURSE RD
MIDLAND, TX 79701

PROJECT No: MA 18017
DATE: 01/30/2020

No.	Date	Description
	01/30/2020	100% CD
2	02/20/2020	Addendum 02
4	02/26/2020	Addendum 04

LEVEL 2 & 3 PLUMBING PLAN

P212

4.1784

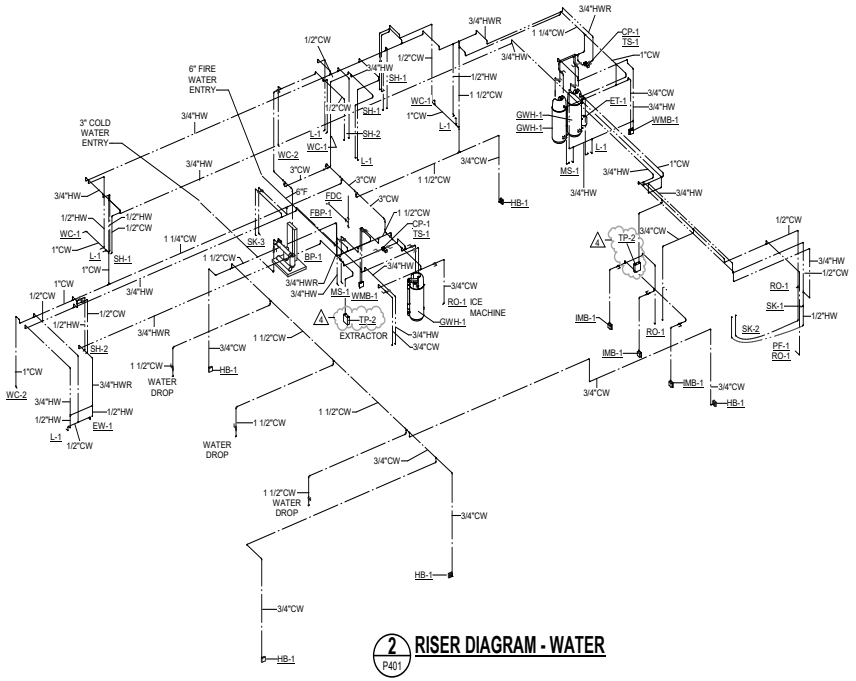

2 P401 **RISER DIAGRAM - WATER**

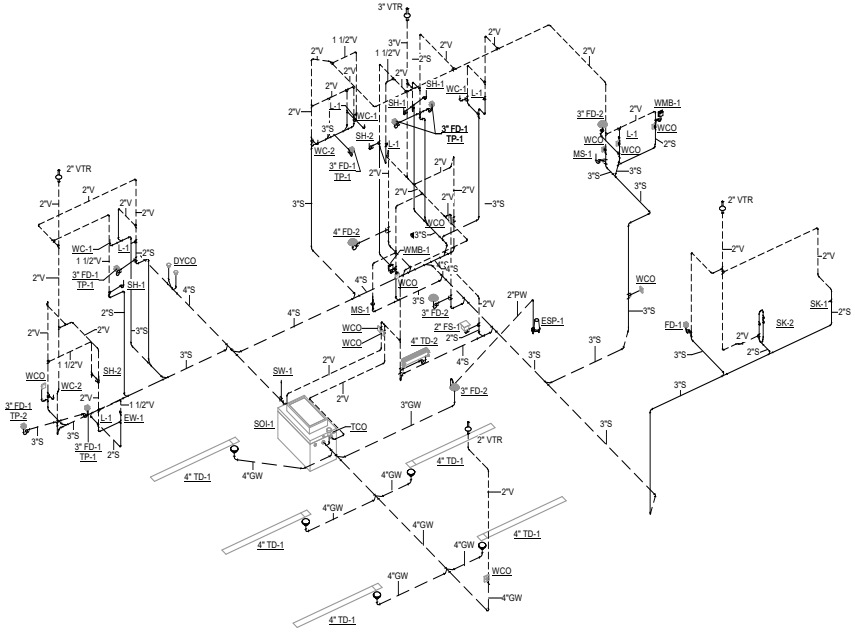

1 P401 **RISER DIAGRAM - SANITARY & VENT**

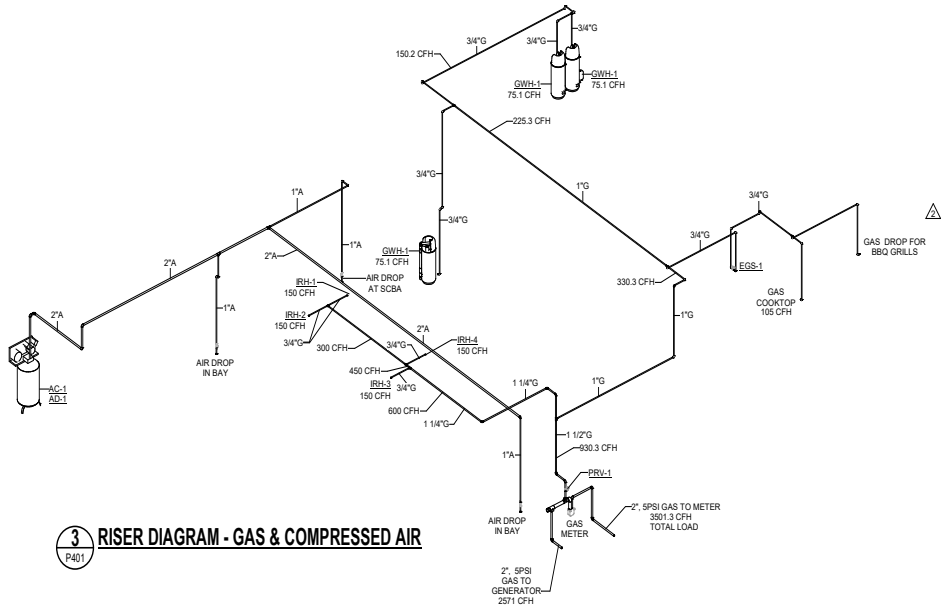

3 P401 **RISER DIAGRAM - GAS & COMPRESSED AIR**

DBR
9601 McAllister Freeway, Suite 410
San Antonio, Texas 78216
210.546.0200 p
210.546.0201 f
TBPE Firm Registration No. 2234

DBR Project Number 196023.000

JC	BV	DA	WJ	JC

PROFESSIONAL SEAL

STATE OF TEXAS
M. JACQUELINE CHANG
124987
LICENSED
PROFESSIONAL ENGINEER
01/30/2020

LOGO/CONTACT

martinez ARCHITECTS

Martinez Architect, LP
900 Rockmead, Suite 250
Houston, Texas 77339
281.346.7371

DESIGN TEAM

Architectural
Martinez Architects

Civil Engineer
Maverick Engineering

Structural
Matrix Structural engineers

MIE/P/T
DBR

Landscape Architect
KDC Associates

FIRE STATION #5

CITY OF MIDLAND
2200 W GOLF COURSE RD
MIDLAND, TX 79701

PROJECT No: **MA 18017**
DATE: **01/30/2020**

No.	Date	Description
	01/30/2020	100% CD
2	02/20/2020	Addendum 02
4	02/26/2020	Addendum 04

PLUMBING RISER DIAGRAMS

P401

4.1785

PLUMBING GENERAL NOTES

1. CONTRACTOR SHALL COMPLY WITH ALL LOCAL, STATE, AND FEDERAL CODES AND AUTHORITIES HAVING JURISDICTION AND SHALL MAKE ALL FINAL CONNECTIONS TO FIXTURES AND EQUIPMENT.
2. DO NOT SCALE PLUMBING DRAWINGS. REFER TO DIMENSIONED ARCHITECTURAL OR EQUIPMENT DRAWINGS FOR EXACT LOCATIONS OF FIXTURES OR EQUIPMENT WITH CONNECTIONS.
3. CONTRACTOR SHALL FIELD VERIFY EXACT LOCATIONS AND ELEVATIONS FOR EXISTING POINTS OF CONNECTION WITH ALL SANITARY, STORM DRAINAGE OR OTHER UTILITY PIPING PRIOR TO THE INSTALLATION OF ANY PIPING. THE CONTRACTOR SHALL BE RESPONSIBLE TO ALERT THE ARCHITECT OF GRADING PROBLEMS PRIOR TO COMMENCING WORK WHEN SUCH PROBLEMS EXIST.
4. ALL PIPE PASSING THROUGH FLOORS OR WALLS WHICH ARE FIRE RATED SHALL BE SUPPORTED AT PENETRATION AND SHALL BE SEALED WITH APPROVED FIRE STOP MATERIALS AS REQUIRED BY BUILDING CODES.
5. CONTRACTOR SHALL COORDINATE WITH STRUCTURAL CONDITIONS AT THE SITE AND PROVIDE PROPER ROUGH-IN CONNECTIONS AS REQUIRED WITHOUT DAMAGE TO STRUCTURE. WHERE MODIFICATIONS TO STRUCTURAL MEMBERS ARE REQUIRED THE CONTRACTOR SHALL RECEIVE WRITTEN APPROVAL FROM THE ARCHITECT AND STRUCTURAL ENGINEER PRIOR TO MODIFICATIONS.
6. CONTRACTOR SHALL BE RESPONSIBLE FOR FIELD COORDINATING ALL PLUMBING PIPING AND SLEEVE LOCATIONS WITH ALL OTHER TRADES PRIOR TO INSTALLATION OF ANY PIPING OR SUPPORTS.

FIRE PROTECTION GENERAL NOTES:

1. FIRE SPRINKLER CONTRACTOR TO FIELD VERIFY SPRINKLER HEAD LOCATIONS.
2. SPRINKLER SYSTEM SHALL BE DESIGNED AND INSTALLED BY A STATE LICENSED FIRE PROTECTION CONTRACTOR IN ACCORDANCE WITH ALL LOCAL, STATE, JURISDICTIONAL, GOVERNMENTAL AGENCIES, MIDLAND COUNTY FIRE CODE, AND NFPA 13 (LATEST ADDITION). SPRINKLER SYSTEM MUST ALSO BE APPROVED BY LANDLORD AND LANDLORD'S FIRE INSURANCE UNDERWRITER.
3. SHOP DRAWINGS AND CALCULATIONS SHALL BE SUBMITTED BY THE CONTRACTOR FOR OWNER. LANDLORD, LANDLORD'S FIRE INSURANCE UNDERWRITER, AND FIRE MARSHALL'S APPROVAL.
4. SPRINKLER SYSTEM SHALL CONTAIN NO VALVES DOWNSTREAM OF CONTROL STATION.
5. CONTRACTOR TO DESIGN SPRINKLER SYSTEM AS REQUIRED TO ACCOMMODATE FIXTURES, PARTITIONS, SOFFITS, FURR DOWNS, CEILING HEIGHTS, ETC.
6. FIRE SPRINKLER SYSTEM SHALL PROVIDE COMPLETE AUTOMATIC PROTECTION AND COVERAGE REQUIRED BY THE LOCAL, STATE, JURISDICTIONAL, GOVERNMENTAL AGENCIES, NFPA 13 (LATEST ADDITION), AND THE MIDLAND COUNTY FIRE CODE. THE WORK SHALL INCLUDE BUT NOT BE LIMITED TO VALVE SUPERVISORY SWITCHES, FLOW SWITCHES AND COORDINATION WITH THE LANDLORDS FIRE ALARM SYSTEM.
7. THE SCOPE OF WORK INCLUDES THE INSTALLATION OF SPRINKLER HEADS INCLUDING PIPE, FITTINGS, HANGERS, AND ACCESSORIES. CONTRACTOR SHALL COORDINATE WITH ARCHITECT THE NEW LOCATIONS OF THE SPRINKLER HEADS PRIOR TO INSTALLATION.
8. THE SPRINKLER SYSTEM SHALL BE FULLY CHARGED AND OPERATIONAL WHEN THE CONTRACTOR IS OFF THE SITE.
9. REFER TO LANDLORD'S CRITERIA FOR ADDITIONAL INFORMATION.
10. SPRINKLER HEADS SHALL BE CONCEALED QUICK RESPONSE WITH WHITE ESCUTCHEONS.

PLUMBING FIXTURES GENERAL NOTES

1. CONTRACTOR TO FIELD VERIFY ELEVATIONS AND DIMENSIONS OF FINISHED FLOORS AND WALLS. TRUE ALL DRAINS, ROUGH-INS AND CARRIERS IN ACCORDANCE WITH WITH PROPOSED ELEVATIONS AND FINISHED SURFACES.
2. MOUNTING HEIGHT ELEVATION OF ALL WALL HUNG OR COUNTER MOUNTED FIXTURES SHALL BE COORDINATED WITH THE ARCHITECT PRIOR TO INSTALLATION OF ROUGH-IN WORK.
3. FOR ALL FIXTURES AND EQUIPMENT WITH ASSOCIATED TRIM OR COMPONENT ACCESSORIES PROVIDED UNDER SEPARATE DIVISIONS AND REQUIRING PLUMBING CONNECTIONS; THIS CONTRACTOR SHALL FIELD COORDINATE EXACT REQUIREMENTS OF, MAKE PROVISIONS FOR, AND SUPPLY ALL MATERIALS AND LABOR FOR MAKING FINAL CONNECTIONS.
4. CONTRACTOR SHALL REFER TO SHOP DRAWINGS OF EQUIPMENT TO BE SUPPLIED FOR FINAL COORDINATION OF ALL ROUGH-IN OPENINGS BEFORE BEGINNING WORK.
5. ALL FIXTURE AND EQUIPMENT STUB-OUTS SHALL BE PROVIDED WITH A STOP VALVE. ALL FIXTURE STOPS SHALL BE SOLID BRASS, LOOSE KEY OPERATED, CHROME PLATED (WHERE EXPOSED), AND FITTED TIGHT TO CHROME PLATED BRASS WALL ESCUTCHEON PLATES.
6. ALL ROUGH IN OPENINGS SHALL BE FITTED WITH CHROME PLATED, HEAVY GAGE BRASS ESCUTCHEON PLATES FITTED TIGHT TO THE PIPE.
7. ALL EXPOSED BRASS SHALL BE CHROME PLATED.
8. PROVIDE DEEP SEAL P-TRAP FOR ALL DRAINS.
9. ALL HANDICAPPED ACCESSIBLE FIXTURES INDICATED WITH ♿ SHALL BE PROVIDED OF APPROVED TYPES AND WITH REQUIRED CONTROLS AND INSTALLED TO HEIGHTS AND CLEARANCES, AS PRESCRIBED BY AMERICAN WITH DISABILITIES ACT (ADA). FIXTURES SHALL COMPLY WITH ALL FEDERAL, STATE, AND LOCAL ADA CODE REQUIREMENTS. REFER TO ARCHITECTURAL DRAWINGS FOR ALL DIMENSIONED ADA MOUNTING HEIGHTS AND SPECIFIED CLEARANCES.

GAS METERING AND PRESSURE REGULATING EQUIPMENT SCHEDULE

EQUIPMENT ITEM	PLAN MARK	GAS QUANTITY C.F.H.	PRESSURE		DISTANCE REGULATOR TO LAST OUTLET	LOCATION	REF. DWG.	SERVICE
			INLET	OUTLET				
GAS METER 1	* * *	3,501.3	5 PSIG	5 PSIG	* * *	SERVICE YARD	MEP01	EMERGENCY GENERATOR AND BUILDING
MAIN REGULATOR 1	PRV-1	930.3	5 PSIG	11"-14" W.C.	130 FT.	SERVICE YARD	MEP01	BUILDING

GENERAL NOTES - GAS PIPING AND REGULATORS

1 GAS REGULATORS SHALL BE EQUIPPED WITH SCREENED VENT OPENINGS ORIENTED TO PREVENT THE ENTRANCE OF WATER OR OTHER FOULING MATERIALS. WHEN LOCATED INSIDE THE BUILDING VENTS SHALL BE PIPED TO THE BUILDING EXTERIOR AND TERMINATED WITH A SCREENED OUTLET 90 ELL FITTING POINTED DOWNWARD. PROVIDE LINE SIZE PLUG OR BALL VALVE AND UNION ON INLET; AND TEE WITH TEST COCK DOWNSTREAM OF ALL REGULATOR ASSEMBLIES.

2 ALL GAS PIPE BELOW GRADE AND BELOW CONCRETE SLAB ABUTTING THE BUILDING BASE SLAB SHALL BE RUN IN A CONTINUOUS SLEEVE. SLEEVES SHALL BE OPEN AT EACH END. BURIED END WITH GOOSENECK A MINIMUM OF 5'-0" BEYOND THE EDGE OF THE CONCRETE SLAB; ABOVE GRADE END, BELOW THE POINT OF ENTRY TO THE BUILDING OR ADJACENT TO REGULATORS OR ISOLATING VALVES.

3 GAS SLEEVES SHALL BE SCHEDULE 40 PVC BELOW GRADE AND WELDED SCHEDULE 40 STEEL ABOVE GRADE.

4 SLEEVES VENTED ABOVE GRADE SHALL BE GOOSENECK ASSEMBLIES WITH SCREENED INLETS AND SHALL BE SECURED IN A VANDAL PROOF MANNER.

WATER HAMMER ARRESTOR SCHEDULE

P.D.I. SYMBOL	FIXTURE UNITS	SIZE
A	1-11	1/2" NPT
B	12-32	3/4" NPT
C	33-60	1" NPT
D	61-113	1 1/4" NPT
E	114-154	1 1/2" NPT
F	155-330	2" NPT

PROVIDE ARRESTORS IN ACCORDANCE WITH THE REQUIREMENTS OF PLUMBING DRAINAGE INSTITUTE (PDI) STANDARD PDI-WH-201. THE USE OF AIR CHAMBERS SHALL NOT BE ACCEPTABLE.

WATER HAMMER ARRESTORS SHALL HAVE LIFETIME WARRANTY AND SHALL BE CERTIFIED BY THE MANUFACTURER AS SUITABLE FOR INSTALLATION WITHOUT A REQUIREMENT FOR ACCESS PANELS. NONETHELESS, ACCESS PANELS SHALL BE PROVIDED IF AND AS REQUIRED BY THE LOCAL AUTHORITY HAVING JURISDICTION (AHJ).

GAS LOAD BREAKDOWN

ITEM	BTU	CFH @ 1000 BTU/CF
WATER HEATERS-3 @ 75,100 Eq.	225,300	225.3
RANGE COOK TOP	105,000	105.0
INFRARED RADIANT HEATER (IRH-1)	150,000	150.0
INFRARED RADIANT HEATER (IRH-2)	150,000	150.0
INFRARED RADIANT HEATER (IRH-3)	150,000	150.0
INFRARED RADIANT HEATER (IRH-4)	150,000	150.0
TOTAL LOW PRESSURE LOAD	930,300	930.3
TOTAL DEVELOPED LENGTH = 150 FT.	SIZING BASED ON TABLE 402.4(3) OF THE IFGC 2015.	
EMERGENCY GENERATOR @ 5PSI FROM MANIFOLD AT METER	2,571,000	2,571.0
TOTAL SITE GAS LOAD	3,501,300	3,501.3

SAND OIL SEPARATOR SCHEDULE

CALCULATIONS

05 TRENCH DRAINS x 8 DFU x 0.25 USAGE FACTOR x 3 GPM/DFU = 30.0 GPM
01 FLOOR DRAINS x 6 DFU x 0.25 USAGE FACTOR x 3 GPM/DFU = 4.5 GPM

TOTAL FLOWRATE = 34.5 GPM

PLAN MARK	MAKE & MODEL NO.	DESCRIPTION
SOI-1 SAND/OIL SEPARATOR	PARK EQUIPMENT COMPANY SOCMP-500-50 WITH GAS TIGHT COVERS	500 US GAL LIQUID CAPACITY; 250 GAL OIL CAPACITY; 9,500 LBS EMPTY WEIGHT; 7'-10" LONG x 4'-4" WIDE x 4'-6" DEEP; INLET FL1= 3'-3"; OUTLET FL2= 3'-0"; 50 GPM FLOW RATE.
SM-1 SAMPLING WELL	PARK EQUIPMENT COMPANY SMB-156 WITH GAS TIGHT COVERS	PRECAST CONCRETE SAMPLING WELL WITH HEAVY DUTY CAST IRON FRAME AND COVER. PIPE SIZE IS 4".

SUMP PUMP SCHEDULE

MARK	SERVICE	GPM	TOTAL HEAD FT	MOTOR HP	ELECTRICAL VOLTS	PHASE	HERTZ	DISCHARGE SIZE	BASIS OF DESIGN
ESP-1	ELEVATOR SUMP PIT	50	15	1/2	115	1	60	2"	STANCOR MODEL SE-50 WITH STANCOR CONTROL PANEL AND ALARM.

PLUMBING FIXTURE SCHEDULE

PLAN MARK	MINIMUM ROUGH-IN SIZES WST&VENT	DRAIN	CW	HW	DESCRIPTION
WATER CLOSET WC-1	4"	2"	4"	1"	--- AMERICAN STANDARD No. 3461 WHITE V.C. ELONGATED SIPHON JET FLOOR MOUNT (1.28 GPF) BOWL WITH TOP SPUD. CENTOCO 500STSCC WHITE OPEN FRONT SEAT AND SLOAN ROYAL FLUSH VALVE No. 111-1.28. REFER TO ARCHITECTURAL DWGS. FOR MOUNTING HEIGHTS.
WATER CLOSET ♿ WC-2	4"	2"	4"	1"	--- AMERICAN STANDARD No. 3461 WHITE V.C. ELONGATED SIPHON JET FLOOR MOUNT (1.28 GPF) BOWL WITH TOP SPUD. CENTOCO 500STSCC WHITE OPEN FRONT SEAT AND SLOAN ROYAL FLUSH VALVE No. 111-1.28. REFER TO ARCHITECTURAL DWGS. FOR MOUNTING HEIGHTS. MOUNTING HEIGHT TO COMPLY WITH ADULT ADA REQUIREMENT.
LAVATORY ♿ L-1	2"	1-1/2"	2"	1/2"	1/2" AMERICAN STANDARD "CADET EVERCLEAN" ROUND, SELF-RIMMING, DROP-IN BASIN No. 0427, WITH AMERICAN STANDARD "MONTERREY" FAUCET No. 7500.170.002, POLISHED CHROME. PROVIDE MCGUIRE No. LK-155A FIXED GRID DRAIN STRAINER, McGUIRE CHROME PLATED CAST BRASS P-TRAP, TAILPIECE, STOPS AND SUPPLIES. PROVIDE TMV-1, DEARBORN SAFETY SERIES INSULATION KIT WHERE PIPING IS EXPOSED.
SHOWER SH-1	2"	1-1/2"	2"	1/2"	1/2" BRADLEY MODEL: No. WS-1WCA INDIVIDUAL COVERALL WALL SHOWER, COMPLETELY PREASSEMBLED WALL SHOWER UNIT. PROVIDE 2" FD-1 FOR BUILT UP SHOWER BASE.
SHOWER ♿ SH-2	2"	1-1/2"	2"	1/2"	1/2" BRADLEY MODEL: No. WS-1WCA-ADA INDIVIDUAL COVERALL WALL SHOWER - ADA COMPLIANT, COMPLETELY PREASSEMBLED WALL SHOWER UNIT. PROVIDE 2" FD-1 FOR BUILT UP SHOWER BASE.
KITCHEN SINK 2-COMP SK-1	2"	1-1/2"	2"	1/2"	1/2" ELKAY No. DLR432212, "LUSTERTONE" EQUAL DOUBLE BOWL DROP-IN SINK, 43"x22"x12-1/8", CHICAGO No 1102-HA8-317ABCP DECK MOUNTED 8" FIXED CENTERS FAUCET WITH 8" SWING HIGH ARCH SPOUT, 4" WRISTBLADE HANDLES AND SIDE SPRAY. PROVIDE TMV-1. STOPS, S.S. SUPPLIES, WYE-BRANCH TAILPIECE FOR RO-1 DRAIN. INSINKERATOR BADGER 5 1/2 HP GARBAGE DISPOSAL, AND CHROME PLATED CAST BRASS P-TRAP.
KITCHEN SINK 1-COMP ♿ SK-2	2"	1-1/2"	2"	1/2"	1/2" ELKAY "LUSTERTONE" CLASSIC STAINLESS STEEL SINK, No. LRAD191865PD, 19"X18"X6-1/2", CHICAGO No 1102-HA8-317ABCP DECK MOUNTED 8" FIXED CENTERS FAUCET WITH 8" SWING HIGH ARCH SPOUT, 4" WRISTBLADE HANDLES AND SIDE SPRAY. PROVIDE TMV-1. STOPS, S.S. SUPPLIES, AND CHROME PLATED CAST BRASS P-TRAP, DEARBORN SAFETY SERIES INSULATION KIT WHERE PIPING IS EXPOSED.
SERVICE SINK SK-3	2"	1-1/2"	2"	1/2"	1/2" ELKAY STAINLESS STEEL WALL HUNG SERVICE SINK, No. ESS231912, 23"X18-1/2"X12". ELKAY WALL MOUNT FAUCET WITH 8" HOLE SPREAD, GOOSENECK SPOUT, 4" LEVER HANDLES, No LK940GN05T4H. PROVIDE STOPS, S.S. SUPPLIES, AND CHROME PLATED CAST BRASS P-TRAP.
HOSE BIBB HB-1	---	---	---	3/4"	--- WATTS HOSE BIBB/SILL COCK No. SC8 SERIES; CAST BRASS, WALL MOUNT, TAMPER-PROOF VACUUM BREAKER WITH BREAK-AWAY SCREW, ADJUSTABLE PACKING NUT CARTRIDGE, NO KINK FAUCET WITH TEE HANDLE.
MOP SINK MS-1	3"	2"	3"	3/4"	3/4" FIAT MODEL No. MSB 2424 MOP SERVICE BASIN. INCLUDE STAINLESS STEEL BUMPER GUARD AND FIAT WALL MOUNTED FAUCET No. 830-AA WITH TOP BRACE, VACUUM BREAKER, PAIL HOOK, AND STERN WILLIAMS No. T-35 BRACKET AND HOSE. PROVIDE STAINLESS STEEL SPLASH PANELS
EMERGENCY EYE WASH ♿ EW-1	---	---	---	1/2"	--- GUARDIAN EYE/FACE WASH No. G1750P-T; ORANGE ABS PLASTIC BOWL. TWO (2) FS-PLUS SPRAY HEADS WITH FLIPTOP DUST COVER AND FILTER; POWDER COATED CAST ALUMINUM FLAG HANDLE ACTIVATION; CHROME PLATED STAY-OPEN BALL VALVE WITH TEFLON SEAL. RE: 3/P602.
REVERSE OSMOSIS RO-1	---	---	3/4"	1/2"	--- CUILLIGAN MODEL No. LCRO-100AC REVERSE OSMOSIS PRE-ASSEMBLED WALL MOUNT, 100 GPD SYSTEM TO INCLUDE CPORT 01004765 9 GALLON STORAGE TANK. INSTALL UNDER KITCHEN SINK AND POT FILLER CABINETS, AT ICE MACHINE(S) AND IN PANTRY AS INDICATED ON PLAN. ROUTE FILTERED WATER TO FIXTURES. RE: 12/P601.
POT FILLER PF-1	---	---	---	1/2"	--- CHICAGO MODEL No. 515-ABCP WALL MOUNTED SINGLE HOLE POT & KETTLE FILLER FAUCET.
ICE MAKER BOX IMB-1	---	---	---	1/2"	--- PPP ICE MAKER BOX No. MM-500 MIMB. RE: 13/P602.
WASHING MACHINE BOX WMB-1	2"	2"	2"	3/4"	3/4" PPP WASHING MACHINE BOX No. MM-500PLB. RE: 9/P601.
FLOOR SINK FS-1	SEE PLAN	SEE PLAN	SEE PLAN	---	--- WATTS FLOOR SINK No. FS-740 SERIES; CAST IRON BODY, NO HUB OUTLET, PORCELAIN ENAMEL COATED CAST IRON 3/4 GRATE.
FLOOR DRAIN FD-1	SEE PLAN	SEE PLAN	SEE PLAN	---	--- WATTS FLOOR DRAIN No. FD-200 SERIES; EPOXY COATED, CAST IRON BODY, NO HUB OUTLET, SQUARE 6"X6" NICKEL BRONZE STRAINER.
FLOOR DRAIN FD-2	SEE PLAN	SEE PLAN	SEE PLAN	---	--- ZURN No.Z-508-S-G CAST IRON DRAIN WITH 9" DIA. DEEP FLANGE GRATE AND SECONDARY STRAINER. PROVIDE DEEP SEAL P-TRAP
TRAP PRIMER TP-1	---	---	---	1/2"	--- PROVIDE SLOAN No. V95-12-A2 FLUSH VALVE VACUUM BREAKER TRAP REFILL SUPPLY. AFFIX TO WATER CLOSET NEAREST TO DRAIN SUPPLIED. ALL EXPOSED TUBING TO BE CHROME PLATED AND RUN AS SHORT AS POSSIBLE TO WALL. CONCEALED DRAIN TUBING SHALL BE 1/2" TYPE 'K' SOFT COPPER SLOPING UNIFORMLY TO DRAIN. RE: 4/P602
TRAP PRIMER TP-2	---	---	---	1/2"	--- PPP PRODUCTS "PRIME TIME" ELECTRONIC TRAP PRIMER MODEL NO. PT-4, UP TO 12 TRAP PRIMER OUTLETS. PLUG ANY UNUSED OUTLETS.
TRENCH DRAIN TD-1 (APPARATUS BAYS)	4"	---	---	---	--- J.R. SMITH ZIP TRENCH 12" WIDE 9960 SERIES POLYPROPYLENE TRENCH DRAIN SYSTEM WITH EXTRA HEAVY DUTY, DIN 19580 DUCTILE IRON GRATE.
TRENCH DRAIN (LAUNDRY) TD-2	4"	2"	---	---	--- BLUCHER MODEL: No. B674-14674-08 12" WIDE, 8" DEEP, STAINLESS STEEL TRENCH DRAIN WITH TWO LINT SCREENS.
EMERGENCY GAS SHUTOFF EGS-1	---	---	---	---	--- LACS FIRE HALL CONTROL PANEL OR EQUAL. RE: 11/P601.
THERMOSTATIC MIXING VALVE TMV-1	---	---	---	3/4"	3/4" POWERS LFE-481 SERIES ADJUSTABLE THERMOSTATIC, ASSE 1016, POINT OF USE MIXING VALVE WITH INLET CHECK STOPS TO LIMIT HOT WATER TEMPERATURE TO MAXIMUM 105° F. AT FAUCET OUTLET. SUPPLY CW TO MIXING VALVE FROM CW RISER TO FAUCET. INSTALL ALL AS HIGH AS POSSIBLE TO PROVIDE NEAT AND CLEAN APPEARANCE. RE: 5/P602.
FLOOR CLEANOUT FCO	---	---	---	---	--- J.R. SMITH No. 4120 SERIES FINISHED FLOOR CLEANOUT WITH "TWIST-TO-FLOOR" ADJUSTABLE ROUND NICKEL BRONZE TOP.
GRADE CLEANOUT GCO	---	---	---	---	--- J.R. SMITH No. 9-2-4 1388-97 DURO-COATED CAST IRON CLEANOUT WITH WATER TIGHT COUNTER-SUNK PLUG AND SCORIATED CAST IRON TOP WITH FRAME.
TRAFFIC CLEANOUT TCO	---	---	---	---	--- J.R. SMITH No. 9-2-4 1388-97 DURO-COATED CAST IRON CLEANOUT WITH WATER TIGHT COUNTER-SUNK PLUG AND SCORIATED CAST IRON TOP WITH FRAME. PROVIDE TRAFFIC RATED BOX.
DOUBLE YARD CLEANOUT DYCO	---	---	---	---	--- J.R. SMITH No. 9-2-4 1388-97 DURO-COATED CAST IRON CLEANOUT WITH WATER TIGHT COUNTER-SUNK PLUG AND SCORIATED CAST IRON TOP WITH FRAME. INSTALL IN 18"X18" CONCRETE PAD. RE: 10/P602.
WALL CLEAN-OUT WCO	---	---	---	---	--- ZURN ZN-1443-BF WALL CLEANOUT, DURA-COATED CAST IRON BODY, GAS AND WATERTIGHT ABS TAPERED THREAD PLUG, AND NICKEL BRONZE SECURED SQUARE, SMOOTH WALL ACCESS COVER AND FRAME. RE: 4/P601.

DOMESTIC WATER PRESSURE BOOSTER SYSTEM

PLAN MARK	SERVICE LOCATION	NO. OF PUMPS	GPM/EA PUMP	SYSTEM PRESSURE VALUES TDH [Feet]	SUCTION [PSI]	BOOST [PSI]	SET [PSI]	MOTOR DATA AND VALUES RPM	HP	KW PER YR.	VOLTS	CONTROL PANEL PHASE	FULL LOAD	MAX. SCCR	REMARKS	DESIGN BASIS MODEL
BP-1		2	77	24	38	10.39	48.39	3,450	1.5	3,341.25	208	Three Phase	11.4	100KAIC	1, 2, 3, 4, 5, 6, 7, 8, 9, 10,11	QUANTUMFLO PRODIGY DUPLEX QES_200/1

1. NET BOOST PRESSURE IS CALCULATED BY SYSTEM SET PRESSURE MINUS SUCTION PRESSURE LESS SYSTEM LOSSES OF 5 PSI.
2. SYSTEM SUBMITTALS SHALL INCLUDE CERTIFICATE NUMBER FOR NSF61 CERTIFICATION, UL508A AND QCZJ 3RD PARTY COMPLIANCE.
3. SYSTEM CONTROLS MUST COMPLY WITH AND PROVIDE FOR EITHER CONTROL LOGIC OR REMOTE SENSOR IN ACCORDANCE WITH ANSI/ASHRAE/IES STANDARD 90.1 ENERGY STANDARD.
4. PROVIDE 5-YEAR WARRANTY ON COMPLETE SYSTEM AND INCLUDE WARRANTY CERTIFICATE WITH DETAILS IN SUBMITTALS.
5. SYSTEM SHALL BE PRE-SET TO SYSTEM SITE CONDITIONS BY SIMULATING SUCTION PRESSURE. HYDROSTATIC-ONLY TESTING IS NOT ACCEPTABLE.
6. THE INDUSTRIAL CONTROLLER SHALL BE IN COMPLIANCE WITH CURRENT NEC, SECTION 409.110 HAVING A MAXIMUM 100K AVAILABLE FAULT CURRENT.
7. SCCR RATINGS MUST BE INCLUSIVE OF ALL COMPONENTS WITHIN THE ENCLOSURE WITHOUT THE NEED TO PROVIDE ADDITIONAL UPSTREAM PROTECTION.
8. EQUAL SYSTEMS MUST SHOW MATHEMATICAL ANALYSIS PROVING THAT THE ALTERNATE SUPPLIER MEETS OR EXCEEDS THE KW CAPACITY LISTED.
9. PROVIDE THE FOLLOWING OPTIONS: GENERAL ALARM DRY CONTACT RELAY; MONITORS: SENSOR FAIL, PIPE BREAK AND VFD FAULTS, VIBRATION ISOLATION KIT.
10. REPRESENTATIVE: HEAT AND TREAT. PHONE: (210) 509-7638.
11. BASED ON CALQFLO(R) PROJECT NUMBER: 11187 TITLED: MIDLAND FIRE STATION #5.

WATER HEATER SCHEDULE

PLAN MARK	MINIMUM ROUGH-IN SIZES WASTE	VENT	DRAIN	CW	HW	DESCRIPTION
GAS WATER HEATER GWH-1	---	---	---	1 1/4"	1 1/4"	A.O. SMITH "PROLINE" No. FCG-100, 98 GALLON STORAGE ASME TANK, 75,100 BTUH INPUT, 81 GPH RECOVERY @ 90° TEMP. RISE, INCLUDES FIXED AUTOMATIC GAS SHUTOFF DEVICE AND PUSH BUTTON SPARK IGNITION.
EXPANSION TANK ET-1	---	---	---	3/4"	---	AMTROL THERM-X-TROL MODEL ST-5-C, ASME THERMAL EXPANSION ABSORBERS, MAXIMUM WORKING PRESSURE 150 PSIG, TOTAL VOLUME 2.1 GALLONS.
CIRCULATION PUMP CP-1	---	---	---	---	3/4"	GRUNDFOS No. UP43-75F ALL BRONZE FLANGED RECIRCULATION PUMP. WIRED FOR 120/60/1 POWER WITH 1/6 HP MOTOR AND FITTED WITH REMOTE HEAT SENSING ADJUSTAT CONTROLLER WITH TS-1 SHUT-OFF TIMER. RE: 6/602.
TIME SWITCH TS-1	---	---	---	---	---	INTERMATIC DIGITAL 24 HOUR TIME SWITCH WITH BATTERY BACK-UP. INSTALL ON WALL ADJACENT TO CIRCULATION PUMP. COORDINATE POWER REQUIREMENTS WITH ELECTRICAL CONTRACTOR. RE: 7 & 8/P601

AIR COMPRESSOR FIXTURE SCHEDULE

PLAN MARK	MINIMUM ROUGH-IN SIZES WASTE	VENT	DRAIN	CW	HW	DESCRIPTION
AIR COMPRESSOR AC-1	---	---	---	---	---	INGERSOLL RAND No. 2475N7.5-P 80 GALLON VERTICAL RECEIVER, TWO STAGE AIR COMPRESSOR, 7.5 HP, 208V, 3Φ AND 24.3 CFM AT 175 PSI MAXIMUM PRESSURE. PROVIDE WITH INGERSOLL RAND MOTOR STARTER KIT. COORDINATE POWER REQUIREMENTS WITH ELECTRICAL CONTRACTOR.
AIR DRYER AD-1	---	---	---	---	---	INGERSOLL RAND No. D72IN AIR DRYER (0.37 KW) CAPABLE OF 42 CFM AT 100 PSI. COORDINATE 120V/1PH POWER WITH ELECTRICAL CONTRACTOR.

FIRE PUMP SYSTEM AND EQUIPMENT

TYPE	DESCRIPTION	MANUFACTURER & MODEL	MINIMUM PERFORMANCE CRITERIA	NOTES
FP-1	FIRE PUMP	PATTERSON 5x3 VIP	ELECTRIC DRIVEN, SINGLE STAGE, VERTICAL INLINE, UL LISTED/FM APPROVED FIRE PUMP. 500 GPM AT 40 PSI RATED HEAD (40 PSI OF BOOST, SEE NOTE 4 BELOW), 20 HP, 3,525 RPM. 208V/3Φ/60Hz. PROVIDE PUMP WITH 125 POUND SUCTION AND DISCHARGE FLANGES.	1,2,3,4,5, 6,7,8,9,10
JP-1	JOCKEY PUMP	GRUNDFOS SERIES CR-1	ELECTRIC DRIVEN, VERTICAL MULTI-STAGE PUMP, ALL HYDRAULIC COMPONENTS OF 304 STAINLESS STEEL CONSTRUCTION, TOTALLY ENCLOSED FAN COOLED (TEFC) MOTOR. 5.0 GPM @ 50 PSI. 0.5 HP, 3450 RPM, 208V/3Φ/60Hz. MINIMUM 1" SUCTION AND DISCHARGE CONNECTIONS, 125 POUND FLANGES.	1
FPC-1	FIRE PUMP CONTROLLER	FIRETROL SERIES FTA-1930	ELECTRIC FIRE PUMP CONTROLLER FOR 20 HP PUMP, DIGITAL SOLID STATE REDUCED VOLTAGE TYPE, SOFT START AND SOFT STOP, MICROPROCESSOR BASED. 100,000 AMP WITHSTAND RATING. COMPLETE WITH NEMA 4 ENCLOSURE, AUTOMATIC TRANSFER SWITCH, AND VOLTAGE SURGE PROTECTOR. FOR 208V/3Φ/60Hz PUMP.	1
JPC-1	JOCKEY PUMP CONTROLLER	FIRETROL SERIES FTA-550F	ELECTRIC JOCKEY PUMP CONTROLLER FOR 0.5 HP PUMP, MICROPROCESSOR BASED, FULL VOLTAGE, ACROSS THE LINE CONTROLLER. COMPLETE WITH NEMA 4 ENCLOSURE. FOR 208V/3Φ/60Hz PUMP.	1

NOTES:

1. CONFIRM MOTOR VOLTAGE AND PHASE REQUIREMENTS WITH ELECTRICAL DRAWINGS. CONTRACTOR TO COORDINATE ALL SUCH REQUIREMENTS PRIOR TO ORDERING EQUIPMENT.
2. PROVIDE FIRE PUMP SYSTEM COMPLETE WITH PUMP, DRIVER, CONTROLLER AND ACCESSORIES.
3. FIRE PUMP SHALL DELIVER NOT LESS THAN 150% OF RATED FLOW AT A PRESSURE NOT LESS THAN 65% OF RATED PRESSURE. THE SHUT OFF PRESSURE SHALL NOT EXCEED 140% OF RATED PRESSURE.
4. EXPECTED SUCTION PRESSURE IS 20 PSIG.
5. PROVIDE 6"x5" ECCENTRIC TAPERED SUCTION REDUCER AND 3"x6" CONCENTRIC TAPERED DISCHARGE INCREASER.
6. PROVIDE 6" FIRE PUMP BYPASS COMPLETE WITH LISTED CHECK VALVE.
7. PROVIDE 4" HOSE VALVE TEST HEADER SUPPLY (UNLESS PIPE LENGTH EXCEEDS 15'-0", VERIFY IN FIELD AND INCREASE PIPE SIZE IN ACCORDANCE WITH NFPA 20).
8. PROVIDE WALL-MOUNTED HOSE VALVE TEST HEADER WITH A MINIMUM OF (2) 2-1/2" HOSE VALVES, NST THREAD, COMPLETE WITH CAPS AND CHAINS.
9. PROVIDE SYSTEM PIPING TO A FIRE DEPARTMENT CONNECTION COMPLETE WITH LISTED CHECK VALVE WITH APPROVED AUTOMATIC DRAIN VALVE, IN ACCORDANCE WITH NFPA AND LOCAL AHJ REQUIREMENTS.

DBR
9601 McAllister Freeway, Suite 410
San Antonio, Texas 78216
210.546.0200 v 210.546.0201 f
TBPE Firm Registration NO. 2234

DBR Project Number 196023.000

JC	BV	DA	WJ	JC

PROFESSIONAL SEAL

STATE OF TEXAS
M. JACQUELINE CHANG
124987
LICENSED
PROFESSIONAL ENGINEER
01/30/2020

LOGO/CONTACT

martinez ARCHITECTS
Martinez Architect, LP
900 Rockmead, Suite 250
Houston, Texas 77339
281.346.7371

DESIGN TEAM

Architectural
Martinez Architects

Civil Engineer
Maverick Engineering

Structural
Matrix Structural Engineers

M/E/P/T
DBR

Landscaping
KDC Associates

FIRE STATION #5

CITY OF MIDLAND
2200 W GOLF COURSE RD
MIDLAND, TX 79701

PROJECT No: MA 18017
DATE: 01/30/2020

No.	Date	Description
	01/30/2020	100% CD
4	02/26/2020	Addendum 04

PLUMBING SCHEDULES

P501

4.1786

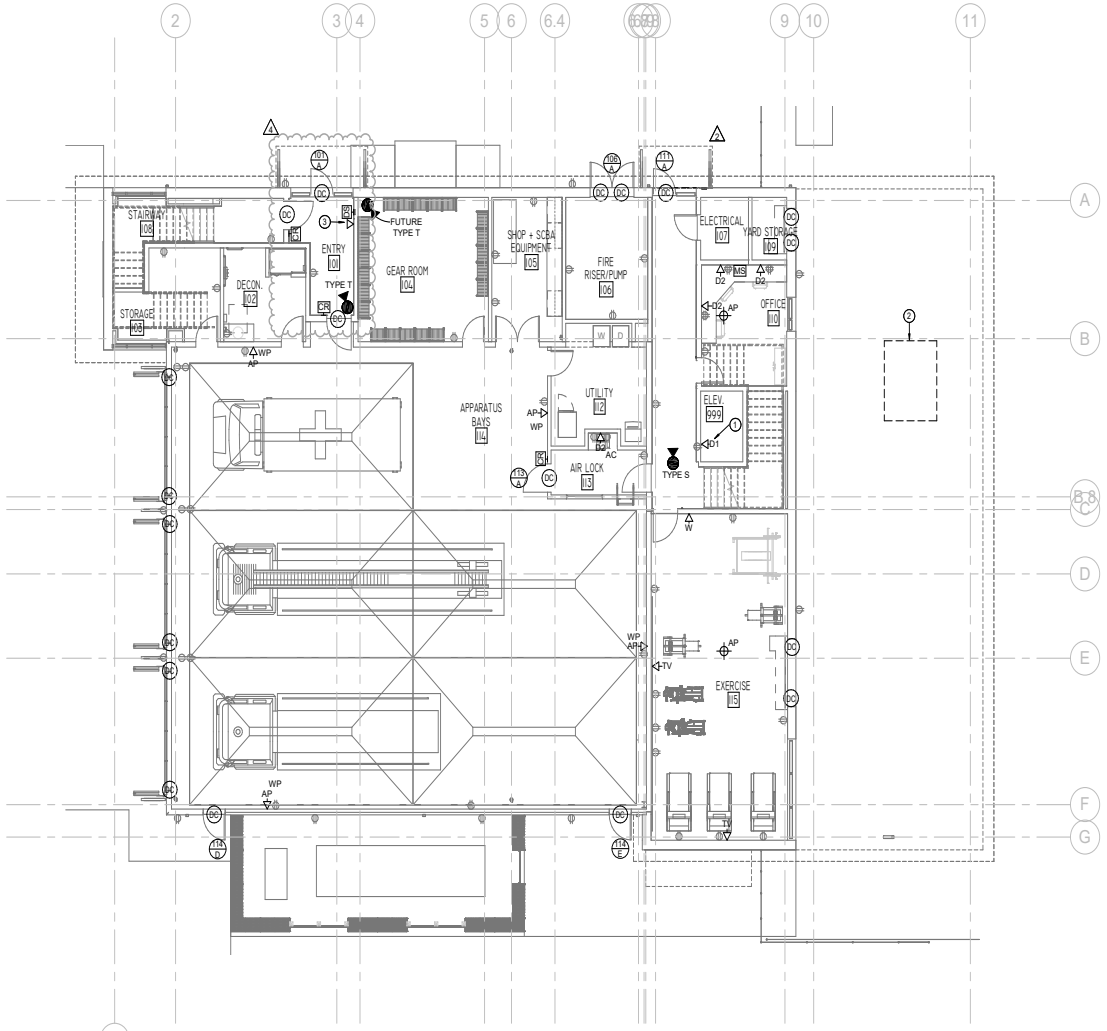

1 TS211 **LEVEL 1 LOW VOLTAGE PLAN**
1/8" = 1'-0"

LOW VOLTAGE GENERAL NOTES

A. REFERENCE NOTES AND LEGENDS AND SPECIFICATION FOR MATERIALS AND METHODS.

B. REFERENCE SHEET TX.X FOR NOTES AND SYMBOL LEGENDS

C. REFERENCE SHEET TSSXX SERIES FOR DETAILS.

LOW VOLTAGE KEYED NOTES

1. THE DESIGNATED TELEPHONE OUTLET SHALL BE RESERVED FOR THE ELEVATOR EMERGENCY CALL. CONTRACTOR TO ROUTE A CABLE FROM THE NEAREST MDF/IDF, TO THE ELEVATOR CONTROL EQUIPMENT. TERMINATE THE CABLE AT THE ELEVATOR EQUIPMENT AND CROSS-CONNECT TO THE TELEPHONE TRAVEL CABLE. COORDINATE EXACT LOCATION, TERMINATION, AND CROSS-CONNECT WITH THE ELEVATOR INSTALLER.

2. INICATES THE APPROXIMATE LOCATION OF THE BUILDING IT ROOM 214 LOCATED ON LEVEL 2.

3. INDICATES THE LOCATION OF A 911 CALL BOX PART # IS-SS-2RA. CONTRACTOR PROVIDED AND INSTALL ONE (1) CATEGORY 6 CABLE TO THIS LOCATION. POINT PRIOR TO INSTALLATION. 911 BOX AND PHONE TO BE PROVIDED AND INSTALLED BY OTHERS.

TRUE NORTH
PROJECT NORTH

DBR
9601 McAllister Freeway, Suite 410
San Antonio, Texas 78216
210.546.0200 v 210.546.0201 f
TBPE Firm Registration No. 2234

DBR Project Number 196023.000

JC | BV | CL | WJ | JC

PROFESSIONAL SEAL

REGISTERED COMMUNICATIONS DISTRIBUTION DESIGNER
Bicsi
Weifang Wang
BICSI ID # 165482
Expires: 01-31-21
01/30/2020

martinez ARCHITECTS
Martinez Architect, LP
900 Rockmead, Suite 250
Houston, Texas 77339
281.346.7371

DESIGN TEAM

Architectural
Martinez Architects

Civil Engineer
Maverick Engineering

Structural
Matrix Structural engineers

MIE/P/T
DBR

Landscape Architect
KDC Associates

FIRE STATION #5

CITY OF MIDLAND
2200 W GOLF COURSE RD
MIDLAND, TX 79701

PROJECT No: **MA 18017**
DATE: **01/30/2020**

No.	Date	Description
	01/30/2020	100% CD
2	02/20/2020	Addendum 02
4	02/26/2020	Addendum 04

LEVEL 1 LOW VOLTAGE PLAN

TS211

4.1787

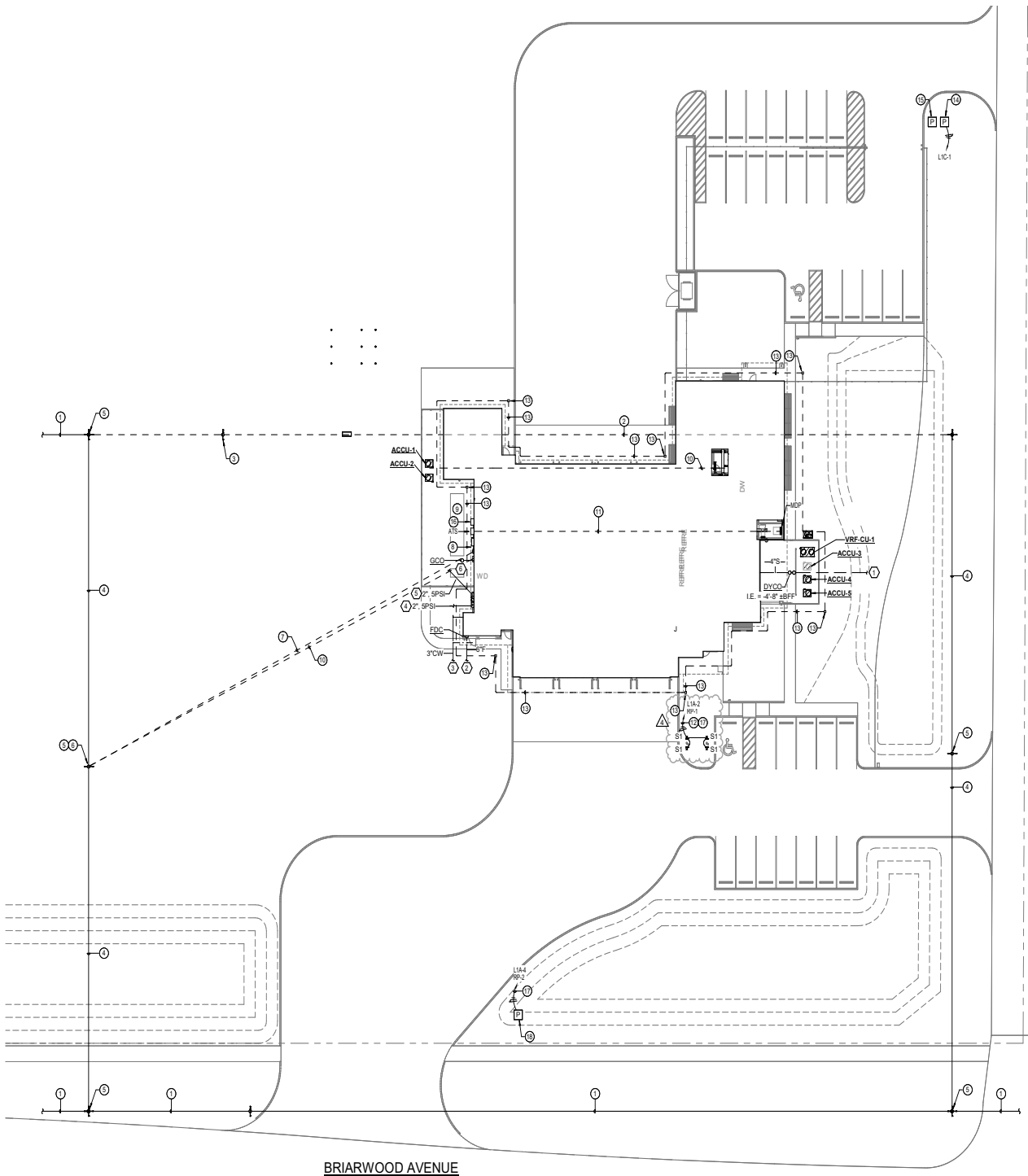

ELECTRICAL KEYED NOTES

1. EXISTING OVERHEAD ELECTRICAL PRIMARY.
2. EXISTING OVERHEAD ELECTRICAL PRIMARY TO BE REMOVED AND REDIRECTED AS INDICATED.
3. EXISTING UTILITY POWER POLE TO BE REMOVED.
4. PROPOSED NEW ROUTE FOR OVERHEAD ELECTRICAL PRIMARY AND NEW IN-LINE POWER POLES.
5. NEW UTILITY POWER POLE FOR OVERHEAD ELECTRICAL RE-ROUTE.
6. NEW POLE-MOUNTED 208V/3-PHASE TRANSFORMER BANK.
7. PROPOSED ROUTING OF NEW UNDERGROUND SECONDARY SERVICE LAERAL TO METER/MAIN SERVICE DISCONNECT.
8. PROPOSED LOCATION OF NEW C/T CAN, METER AND MAIN SERVICE DISCONNECT. REFER TO POWER PLAN AND ELECTRICAL ONE-LINE DIAGRAM FOR MORE INFORMATION.
9. PROPOSED LOCATION FOR 200KW NATURAL GAS GENERATOR. REFER TO ELECTRICAL ONE-LINE DIAGRAM FOR ADDITIONAL INFORMATION.
10. ROUTE (3)-4" CONDUITS UNDERGROUND WITH PULLSTRING FOR COMMUNICATION CABLING MAIN ENTRANCE UP TO IT ROOM 124. REFER TO SHEET TS201 FOR APPROXIMATE LOCATION OF STUB-UPS. COORDINATE EXACT LOCATION WITH DATA/COMMUNICATION EQUIPMENT PROVIDER.
11. PROPOSED ROUTING OF EMERGENCY FEEDER AND GENERATOR CONTROL WIRING. REFER TO ELECTRICAL ONE-LINE DIAGRAM ON SHEET E401 FOR ADDITIONAL INFORMATION.
12. PROVIDE POWER FOR FLAGPOLE LIGHTING. REFER TO LIGHTING FIXTURE SCHEDULE FOR FIXTURE TYPE.
13. LIGHTNING PROTECTION UNDERGROUND LOOP. PROVIDE MINIMUM NUMBER OF ADDITIONAL GROUNDS AS REQUIRED. PROVIDE GROUND TEST WELLS FOR ALL GROUND RODS.
14. EXTEND 2#8, 1#10 GROUND IN 1" CONDUIT UNDERGROUND TO SECURITY GATE. COORDINATE EXACT LOCATION WITH OWNER/ARCHITECT.
15. EXTEND 1" CONDUIT UNDERGROUND IN SAME TRENCH AS POWER FOR SECURITY GATE CARD READER. COORDINATE EXACT LOCATION WITH OWNER/ARCHITECT.
16. GENERATOR DOCKING STATION. REFER TO ELECTRICAL ONE-LINE DIAGRAM FOR ADDITIONAL INFORMATION.
17. EXTEND CIRCUIT THROUGH LIGHTING RELAY PANEL 'RP' CONTROLLED BY PHOTOCELL AND TIMECLOCK. EXTERIOR LIGHTING SHALL BE PROGRAMMED ACCORDING TO IECC 2015. LIGHTING RELAY PANEL SHALL BE LOCATED NEXT TO ELECTRICAL PANEL SERVING EXTERIOR LIGHTING LOAD.
18. PROVIDE POWER TO MONUMENT SIGN. COORDINATE EXACT LOCATION WITH OWNER/ARCHITECT.

PLUMBING KEYED NOTES

1. 4" SANITARY. I.E.= -4'-8"± B.F.F. REFERENCE CIVIL DRAWINGS FOR CONTINUATION.
2. 6" FIRE LINE. REFERENCE CIVIL DRAWINGS FOR CONTINUATION.
3. 3" COLD WATER. REFERENCE CIVIL DRAWINGS FOR CONTINUATION.
4. 2", 5PSI GAS TO METER. REFERENCE CIVIL DRAWINGS FOR CONTINUATION.
5. 2", 5PSI GAS TO GENERATOR. REFERENCE MANUFACTURER'S DOCUMENTS FOR ROUTING AND CONNECTION POINT.
6. 4" SAND/OIL INV. EL. = -3'10" ±BFF. STUB UP TO GRADE CLEANOUT.

TRUE NORTH | PROJECT NORTH

1 MEP SITE PLAN - BASE BID
MEP101 3/64" = 1'-0"

DBR
9601 McAllister Freeway, Suite 410
San Antonio, Texas 78216
210.546.0200 v 210.546.0201 f
TBPE Firm Registration No. 2234

DBR Project Number 196024.000

JC | BV | DA | WJ | JC

PROFESSIONAL SEAL
STATE OF TEXAS
M. JACQUELINE CHANG
124987
LICENSED
PROFESSIONAL ENGINEER
02/26/2020

martinez ARCHITECTS
Martinez Architect, LP
900 Rockmead, Suite 250
Houston, Texas 77339
281.346.7371

DESIGN TEAM

Architectural
Martinez Architects

Civil Engineer
Maverick Engineering

Structural
Matrix Structural engineers

MEP/FP/T
DBR

Landscape Architect
KDC Associates

FIRE STATION #11
CITY OF MIDLAND
6600 BRIARWOOD AVE
MIDLAND, TX 79707

PROJECT No: MA 18017
DATE: 01/30/2020

No.	Date	Description
	01/30/2020	100% CD
4	02/26/2020	Addendum 04

MEP SITE PLAN - BASE BID

MEP101

4.1788

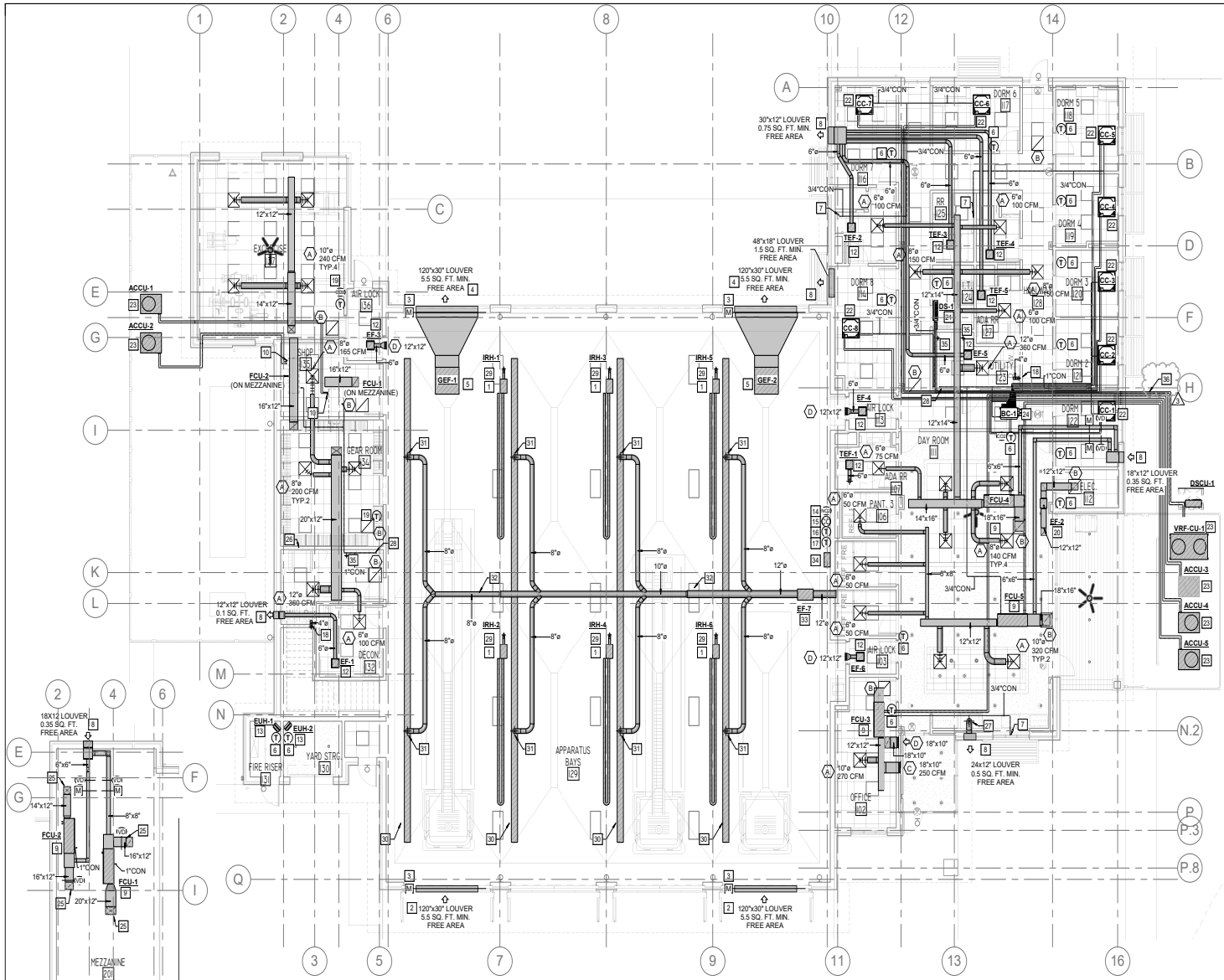

1 LEVEL 1 MECHANICAL PLAN
M201 — 1/8" = 1'-0"

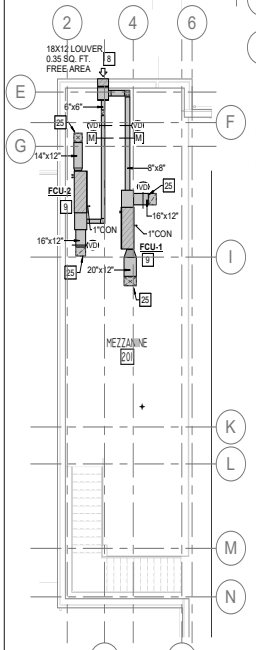

2 MEZZANINE MECHANICAL PLAN
M201 — 1/8" = 1'-0"

MECHANICAL KEYED NOTES:

1. PROVIDE GAS INFRARED HEATER AT APPROXIMATE LOCATION. MOUNT HEATER AS HIGH AS POSSIBLE BELOW STRUCTURE. COORDINATE EXACT LOCATION WITH ARCHITECT TO AVOID CONFLICT. ROUTE 4" ROUND FLUE FROM HEATER UP THROUGH ROOF AND TERMINATE 3'-0" ABOVE ROOF WITH ROOF CAP. SLOPE OF FLUE SHALL NOT BE MORE THAN 45° FROM VERTICAL. RE: DETAILS 15&16/M601.
2. PROVIDE RUSKIN ELF375DX INTAKE AIR LOUVER WITH A FREE AREA AS INDICATED. COORDINATE EXACT LOUVER DIMENSIONS, LOCATION, AND FINISH WITH ARCHITECT. INTAKE LOUVER SHALL BE PROVIDED WITH A MINIMUM OF 18" DEEP PLENUM, FULL SIZE IN WIDTH AND HEIGHT OF LOUVER UNLESS NOTED OTHERWISE. INTAKE LOUVER SHALL BE INSTALLED A MINIMUM OF 10'-0" FROM EXHAUST OUT OF BUILDING. RE: 18/M601.
3. INTERLOCK MOTORIZED DAMPER WITH ASSOCIATED EXHAUST FANS SUCH THAT DAMPER SHALL BE OPEN WHEN FANS ARE ENERGIZED AND SHUT WHEN FANS ARE DE-ENERGIZED.
4. PROVIDE RUSKIN ELF375DX EXHAUST AIR LOUVER WITH DIMENSIONS AND FREE AREA AS INDICATED. EXHAUST LOUVER SHALL BE PROVIDED WITH A MINIMUM OF 18" DEEP PLENUM, FULL SIZE IN WIDTH AND HEIGHT OF LOUVER UNLESS NOTED OTHERWISE. RE: 6/M403.
5. PROVIDE INLINE EXHAUST FAN AS SCHEDULED, AT APPROXIMATE LOCATION. INSTALL PER MANUFACTURER SPECIFICATION. COORDINATE EXACT LOCATION WITH ARCHITECT. PROVIDE TRANSITIONS AS REQUIRED. COVER INLET OF FAN WITH HARDWARE CLOTH. RE: DETAIL 9/M601.
6. LOCATE THERMOSTAT AS SHOWN. MOUNT AT SAME ELEVATION AS LIGHT SWITCHES. COORDINATE EXACT LOCATION WITH ARCHITECT.
7. ROUTE CONDENSATE TO FLOOR DRAIN/TAILPIECE AT LOCATION SHOWN. REFER TO PLUMBING FOR EXACT LOCATION. UNLESS NOTED OTHERWISE, SIZE CONDENSATE PER MANUFACTURER'S RECOMMENDATION. RE: DETAIL 7/M601.
8. PROVIDE RUSKIN ELF375DX INTAKE/EXHAUST AIR LOUVER WITH DIMENSIONS AND FREE AREA AS INDICATED. EXHAUST LOUVER SHALL BE PROVIDED WITH A MINIMUM OF 18" DEEP PLENUM, FULL SIZE IN WIDTH AND HEIGHT OF LOUVER UNLESS NOTED OTHERWISE. RE: 18/M601 FOR INTAKE & 17/M601 FOR EXHAUST.
9. PROVIDE NEW HORIZONTAL FAN COIL UNIT AS SCHEDULED AT LOCATION SHOWN. SUSPEND FAN COIL UNIT FROM STRUCTURE. PROVIDE FLEXIBLE CONNECT AT UNIT DISCHARGE. PROVIDE ALL CLEARANCES AND ACCESS AS RECOMMENDED BY THE MANUFACTURER. RE: DETAIL 13/M601.
10. ROUTE REFRIGERANT PIPING UP THROUGH MEZZANINE TO ASSOCIATIVE FAN COIL UNIT. SIZE PER MANUFACTURERS RECOMMENDATION. CONTRACTOR TO VERIFY EXACT ROUTING. RE: DETAILS 3&4/M602.
11. PROVIDE RETURN AIR BOOT IN LOCATION SHOWN. SIZE AS INDICATED ON PLANS. RE: DETAILS 8, 9, 10/M601.
12. PROVIDE CEILING MOUNTED EXHAUST FAN AS SCHEDULED IN APPROXIMATE LOCATION. RE: DETAIL 19/M601.
13. PROVIDE ELECTRIC UNIT HEATER AT APPROXIMATE LOCATION. MOUNT HEATER 12" BELOW CEILING OR MAXIMUM MOUNT HEIGHT. FIELD COORDINATE EXACT LOCATION TO AVOID CONFLICTS WITH ADJACENT EQUIPMENT. RE: DETAIL 20/M601.
14. PROVIDE NO2 (NITROGEN DIOXIDE) DETECTOR, HONEYWELL ANALYTICS E3POINT WITH MOTOR STARTER, WITH A BATTERY BACK-UP AND TEST BUTTON AT SAME ELEVATION AS LIGHT SWITCHES. COORDINATE WITH ARCHITECT PRIOR TO CONSTRUCTION TO AVOID CONFLICTS. GEF-1 & GEF-2 SHALL RAMP UP TO MAXIMUM AIRFLOW RATE AND A VISUAL AND AUDIBLE ALARM WILL SIGNAL WHEN THE NO2 DETECTOR DETECTS A CONCENTRATION OF 50 PARTS PER MILLION OF NO2. NO2 DETECTORS SHALL BE INSTALLED IN ACCORDANCE WITH MANUFACTURER'S RECOMMENDATIONS.
15. PROVIDE CO (CARBON MONOXIDE) DETECTOR, HONEYWELL ANALYTICS E3POINT WITH MOTOR STARTER, WITH A BATTERY BACK-UP AND TEST BUTTON AT SAME ELEVATION AS LIGHT SWITCHES. COORDINATE WITH ARCHITECT PRIOR TO CONSTRUCTION TO AVOID CONFLICTS. GEF-1 & GEF-2 SHALL RAMP UP TO MAXIMUM AIRFLOW RATE AND A VISUAL AND AUDIBLE ALARM WILL SIGNAL WHEN THE CO DETECTOR DETECTS A CONCENTRATION OF 50 PARTS PER MILLION (ADJ) OF CO. CO DETECTORS SHALL BE INSTALLED IN ACCORDANCE WITH MANUFACTURER'S RECOMMENDATIONS.
16. PROVIDE WALL MOUNTED APPARATUS BAY EXHAUST CONTROLLER, HONEYWELL ANALYTICS E301C OR EQUAL, AT SAME ELEVATION AS LIGHT SWITCHES. COORDINATE WITH ARCHITECT PRIOR TO CONSTRUCTION TO AVOID CONFLICT. CONTROLLER SHALL MODULATE THE FAN SPEED OF GEF-1 AND GEF-2 FROM MINIMUM TO MAXIMUM SPEED BASED ON SIGNAL FROM CO/NO2 SENSOR OR WHEN TEMPERATURE EXCEEDS 85°F (ADJ). EXHAUST FAN SHALL OPERATE CONTINUOUSLY AT MINIMUM SPEED. UPON DETECTION OF CO OR NO2 CONCENTRATIONS ABOVE ASSOCIATED HIGH LIMITS, THE EXHAUST FANS SHALL OPERATE AT DESIGN MAXIMUM AIRFLOW RATES.
17. TIE ALL GAS INFRARED HEATERS TOGETHER AND LOCATE THERMOSTAT ON WALL AS SHOWN. MOUNT AT SAME ELEVATION AS LIGHT SWITCHES THERMOSTAT SHALL ENERGIZE HEATER TO MAINTAIN TEMPERATURE AT 60°F (ADJUSTABLE).
18. ROUTE RIGID METAL EXHAUST DUCT TO EXHAUST VENT CAP. VENT CAP TO BE AIR KING PWC6R OR ARCHITECT SPECIFIED EQUIVALENT. PROVIDE TRANSITIONS AS REQUIRED. RE: DETAILS 5/M602.
19. LOCATE THERMOSTAT AS SHOWN. THERMOSTAT MODEL HONEYWELL VISION PRO 8000 MOUNT AT SAME ELEVATION AS LIGHT SWITCHES. COORDINATE EXACT LOCATION WITH ARCHITECT.
20. PROVIDE INLINE EXHAUST FAN AS SCHEDULED. DISCHARGE SHALL TERMINATE ABOVE PLENUM. RE: DETAIL 7/M602.
21. PROVIDE WALL MOUNTED DUCTLESS UNIT AT APPROXIMATE LOCATIONS SHOWN.
22. PROVIDE CEILING MOUNTED CASSETTE AS SCHEDULED IN LOCATION SHOWN. INSTALL PER MANUFACTURER'S RECOMMENDATION.
23. PROVIDE CONDENSING UNIT AS SCHEDULED, AT APPROXIMATE LOCATION SHOWN.
24. PLACE HEAT RECOVERY BOX IN APPROXIMATE AREA.
25. ROUTE DUCTWORK DOWN THROUGH MEZZANINE.
26. ROUTE CONCENTRIC INTAKE AND EXHAUST VENT FOR GAS WATER HEATER TO THE SIDE OF THE BUILDING AND CONNECT TO VENT KIT PROVIDED BY MANUFACTURER.
27. CONNECT 10"Ø EXHAUST TO RANGE HOOD. CONFIRM FINAL HOOD CONNECTION AND PROVIDE TRANSITIONS AS REQUIRED. WRAP ENTIRE DUCT AND LOUVER PLENUM WITH 3M TWO-HOUR RATED FIRE WRAP, SIMILAR TO MODEL 615+.
28. ROUTE CONDENSATE TO MOP SINK AT LOCATION SHOWN. REFER TO PLUMBING FOR EXACT LOCATION. UNLESS NOTED OTHERWISE, SIZE CONDENSATE PER MANUFACTURER'S RECOMMENDATION. RE: DETAIL 7/M601.
29. ROUTE 4" DIAMETER COMBUSTION AIR INTAKE UP THROUGH ROOF. PROVIDE WITH COMBUSTION AIR INTAKE KIT. INSTALL PER MANUFACTURER'S SPECIFICATIONS.
30. VERTICAL SUCTION RAIL PROVIDED AND INSTALLED BY MAGNEGRIP. MAGNEGRIP TO COORDINATE LOCATION WITH OWNER'S EQUIPMENT. BOTTOM OF RAILS TO BE INSTALLED AT 12'-4" A.F.F..
31. EXTEND 8"ø DUCT DOWN AND CONNECT TO TOP OF HORIZONTAL SUCTION RAIL.
32. ROUTE EXHAUST DUCT AS HIGH AS POSSIBLE.
33. PROVIDE INLINE VEHICLE EXHAUST FAN AS SCHEDULED. SUSPEND FROM STRUCTURE ABOVE. EXTEND DISCHARGE DUCT THROUGH EXTERIOR WALL AND TERMINATE WITH WALL CAP. SEAL PENETRATION WEATHER-TIGHT. BOTTOM OF FAN SHALL BE MOUNTED AT 15'-6" A.F.F..
34. PROVIDE MAGNEGRIP CONTROL PANEL ON WALL IN APPROXIMATE LOCATION SHOWN. ALL CONTROL WIRING FROM PANEL TO DUCT MOUNTED SENSOR SHALL BE ROUND IN 3/4" EMT CONDUIT BY MAGNEGRIP INSTALLER.
35. ROUTE VENT FOR EQUIPMENT UP THROUGH ROOF. SIZE VENT PER MANUFACTURER'S INSTRUCTIONS.
36. ROUTE REFRIGERANT PIPING THROUGH SIDEWALK TRENCH. COORDINATE WITH ARCHITECTURAL. (1)

TRUE NORTH / PROJECT NORTH

DBR
9601 McAllister Freeway, Suite 410
San Antonio, Texas 78216
210.546.0200 v 210.546.0201 f
TBPE Firm Registration No. 2234

DBR Project Number 196024.000

JC | BV | DA | WJ | JC

PROFESSIONAL SEAL

STATE OF TEXAS — M. JACQUELINE CHANG — 124987 — LICENSED PROFESSIONAL ENGINEER — 02/20/2020

martinez ARCHITECTS
Martinez Architect, LP
900 Rockmead, Suite 250
Houston, Texas 77339
281.346.7371

DESIGN TEAM

Architectural
Martinez Architects

Civil Engineer
Maverick Engineering

Structural
Matrix Structural engineers

MEP/FP/T
DBR

Landscape Architect
KDC Associates

Consultant 5 Discipline Type
Consultant 5 Name

FIRE STATION #11

CITY OF MIDLAND
6600 BRIARWOOD AVE
MIDLAND, TX 79707

PROJECT No: **MA 18017**
DATE: **16-JAN-2020**

No.	Date	Description
1	01/30/2020	100% CD
3	02/26/2020	Addendum 04

LEVEL 1 & MEZZANINE MECHANICAL PLAN

M201

4.1789

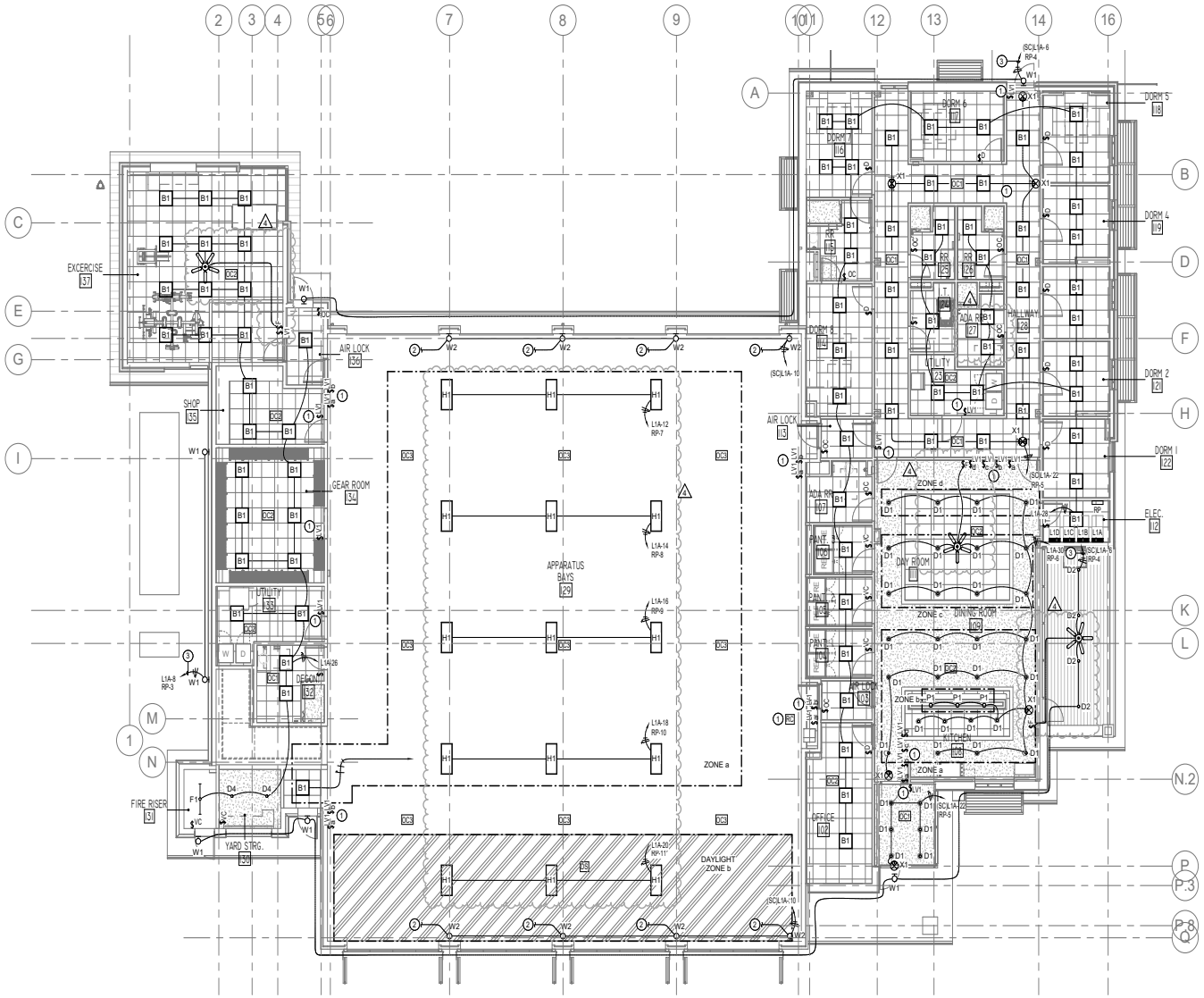

1 E101 **LEVEL 1 LIGHTING PLAN**
1/8" = 1'-0"

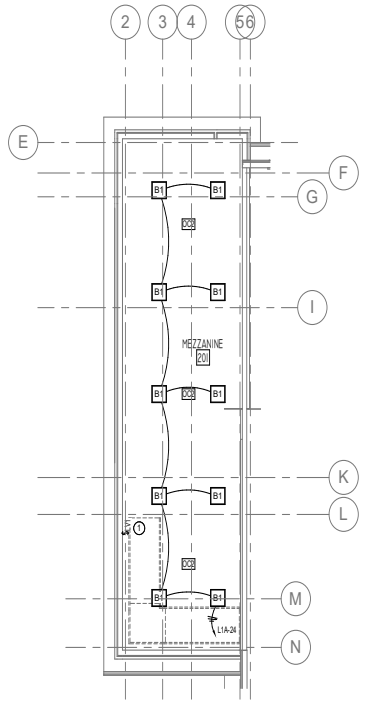

2 E101 **MEZZANINE LIGHTING PLAN**
1/8" = 1'-0"

LIGHTING GENERAL NOTES

A. ALL CEILING MOUNTED OCCUPANCY SENSORS SHALL BE WATTSTOPPER #DT-300. PROVIDE #BZ-150 UNIVERSAL VOLTAGE POWER PACKS AND OVERRIDE SWITCHES AS REQUIRED FOR CONTROL INDICATED. ALL POWER PACKS SHALL BE SET TO MANUAL-ON/AUTO-OFF UNLESS OTHERWISE NOTED.

B. ALL LOW VOLTAGE SWITCHES TAGGED AS "LV" SHALL BE WATTSTOPPER #LVSW-101 UNLESS NOTED OTHERWISE. REFER TO LOW VOLTAGE SWITCH SCHEDULE DETAIL #3/303 FOR ADDITIONAL SWITCH TYPES.

C. ALL WALL MOUNTED OCCUPANCY SENSORS LABELED AS OC SHALL BE WATTSTOPPER #DSW-100. REFER TO LOW VOLTAGE SWITCH SCHEDULE DETAIL 3 ON SHEET E603 FOR ADDITIONAL SWITCH TYPES WHEN NOTED OTHERWISE.

D. ALL CEILING MOUNTED DEVICES LOCATED IN LAY-IN CEILINGS SHALL BE CENTERED IN THE CEILING TILE.

E. MULTIPLE SWITCHES SHOWN TOGETHER SHALL BE GANGED TOGETHER UNDER A COMMON COVER PLATE.

F. CONTRACTOR SHALL INDICATE LIGHTING CIRCUIT SERVING EACH SWITCH BY PROVIDING TYPE WRITTEN LABELING LOCATED ON INSIDE FACE OF EACH SWITCH COVER PLATE.

G. SPRINKLER CONTRACTOR SHALL COORDINATE SPRINKLER HEAD LOCATIONS WITH CEILING MOUNTED LIGHTING FIXTURES.

H. LOWER CASE CHARACTER ADJACENT TO SWITCH AND/OR LIGHTING FIXTURE INDICATES SWITCHING GROUP.

I. ELECTRICAL CONTRACTOR SHALL COORDINATE INSTALLATION OF ALL RECESSED LIGHTING FIXTURES WITH THE CEILING INSTALLER, TO PROVIDE FIRE PROTECTION AS DESCRIBED IN THE UL FIRE RESISTANCE DIRECTORY STANDARD APPROPRIATED TO THE CEILING ASSEMBLY INSTALLED AND FIRE RATING REQUIRE. REFER TO THE ARCHITECTURAL DRAWINGS FOR UL DESIGN NUMBER. REFER TO DETAIL 11 SHEET E302.

LIGHTING KEYED NOTES

1. REFER TO SHEET E501 FOR LIGHTING CONTROL DEVICE INFORMATION.
2. W3 LIGHTING FIXTURE SHALL FLASH WHILE OPERATING WHEN OPENING AND CLOSING ASSOCIATED MOTORIZED DOOR. PROVIDE RELAY AND TIE INTO DOOR CONTROLLER.
3. EXTEND CIRCUIT THROUGH LIGHTING RELAY PANEL "RP" CONTROLLED BY PHOTOCELL AND TIMECLOCK. EXTERIOR LIGHTING SHALL BE PROGRAMMED ACCORDING TO IECC 2015. LIGHTING RELAY PANEL SHALL BE LOCATED NEXT TO ELECTRICAL PANEL SERVING EXTERIOR LIGHTING LOAD.

TRUE NORTH | PROJECT NORTH

DBR
9601 McAllister Freeway, Suite 410
San Antonio, Texas 78216
210.546.0200 v 210.546.0201 f
TBPE Firm Registration No. 2234

DBR Project Number 196024.000

JC | BV | DA | WJ | JC

PROFESSIONAL SEAL

STATE OF TEXAS
M. JACQUELINE CHANG
124987
LICENSED
PROFESSIONAL ENGINEER
02/26/2020

martinez ARCHITECTS
Martinez Architect, LP
900 Rockmead, Suite 250
Houston, Texas 77339
281.346.7371

DESIGN TEAM

Architectural
Martinez Architects

Civil Engineer
Maverick Engineering

Structural
Matrix Structural engineers

MEP/FP/T
DBR

Landscape Architect
KDC Associates

FIRE STATION #11

CITY OF MIDLAND
6600 BRIARWOOD AVE
MIDLAND, TX 79707

PROJECT No: **MA 18017**
DATE: **01/30/2020**

No.	Date	Description
	01/30/2020	100% CD
4	02/26/2020	Addendum 04

LEVEL 1 & MEZZANINE LIGHTING PLAN

E101

4.1790

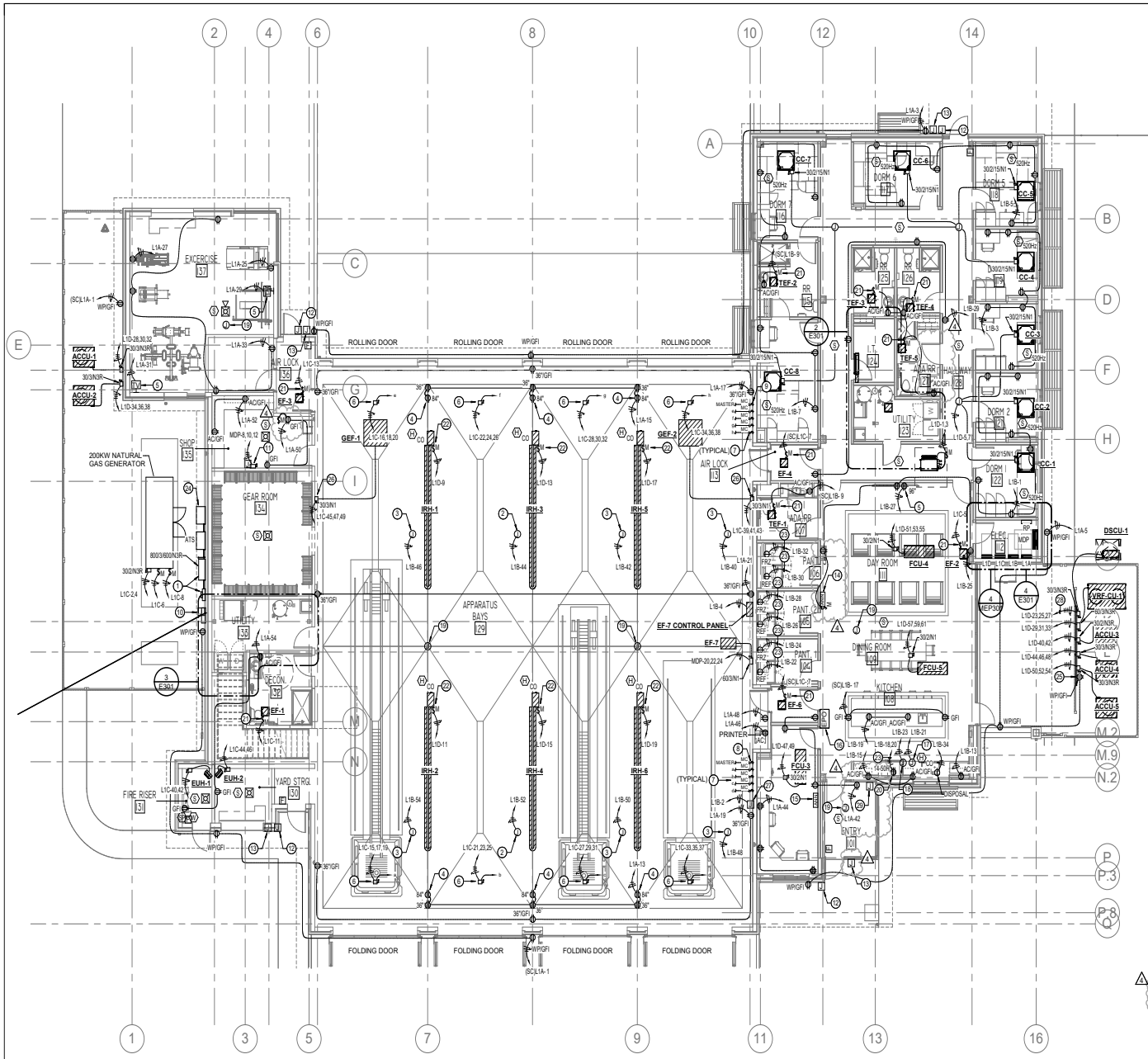

ELECTRICAL KEYED NOTES

1. PROPOSED LOCATION FOR ELECTRICAL SERVICE EQUIPMENT. FIELD COORDINATE INSTALLATION WITH POWER COMPANY, REFER TO ONE LINE DIAGRAM ON SHEET E401 FOR ADDITIONAL INFORMATION.
2. PROVIDE RETRACTABLE POWER CORD REEL WITH 120V 30A RECEPTACLE, FURNISHED WITH PIVOT BASE. PROVIDE DUPLEX RECEPTACLE AT CORD REEL BASE. FIELD COORDINATE EXACT LOCATION, CABLE LENGTH AND ADDITIONAL REQUIREMENTS WITH ARCHITECT/OWNER PRIOR TO ROUGH-IN. PROVIDE WITH QUICK RELEASE PLUG. RE 4/E6.02.
3. PROVIDE RETRACTABLE POWER CORD REEL WITH 120V 20A RECEPTACLE, FURNISHED WITH 120V 20A RECEPTACLE. PROVIDE DUPLEX RECEPTACLE AT CORD PROVIDE DUPLEX RECEPTACLE AT CORD REEL BASE. FIELD COORDINATE EXACT LOCATION, CABLE LENGTH AND ADDITIONAL REQUIREMENTS WITH ARCHITECT/OWNER PRIOR TO ROUGH-IN. PROVIDE WITH QUICK RELEASE PLUG. RE 4/E6.02.
4. RECEPTACLE FOR TURN OUT TIMER. COORDINATE MOUNTING HEIGHTS AND ALL REQUIREMENTS WITH OWNER PRIOR TO ROUGH IN.
5. POWER AND A/V OUTLETS FOR WALL MOUNTED TELEVISION. FIELD COORDINATE EXACT LOCATION WITH ARCHITECT/OWNER PRIOR TO ROUGH-IN. COORDINATE PURVIS SYSTEM WITH TECHNOLOGY DRAWINGS.
6. PROVIDE POWER CONNECTION TO BAY DOOR MOTOR CONTROLLER. FIELD COORDINATE EXACT LOCATION, CONTROL WIRING QUANTITIES AND ADDITIONAL REQUIREMENTS WITH DOOR INSTALLER PRIOR TO ROUGH-IN. ROUTE (1) 3/4" CONDUIT WITH CONTROL WIRE TO ASSOCIATED OPEN/CLOSE SWITCH.
7. PROVIDE OPEN/CLOSE CONTROL SWITCH FOR MOTORIZED FOLDING/ROLLING DOOR. FIELD COORDINATE EXACT LOCATION WITH ARCHITECT/OWNER PRIOR TO ROUGH-IN (FOLDING DOOR MANUFACTURER TO PROVIDE CONTROL PANEL).
8. PROVIDE OPEN/CLOSE MASTER CONTROL SWITCH. COORDINATE EXACT LOCATION WITH ARCHITECT AND DOOR INSTALLER PRIOR TO ROUGH-IN. SWITCH SHALL CONTROL ALL 4 FRONT FOLDING DOORS.
9. PROVIDE OPEN/CLOSE MASTER CONTROL SWITCH. COORDINATE EXACT LOCATION WITH ARCHITECT AND DOOR INSTALLER PRIOR TO ROUGH-IN. SWITCH SHALL CONTROL ALL 4 BACK ROLLING DOORS.
10. 120V JUNCTION BOX CONNECTION FOR IRRIGATION CONTROLLER. FIELD COORDINATE EXACT LOCATION, MOUNTING HEIGHT AND ADDITIONAL REQUIREMENTS WITH LANDSCAPE CONTRACTOR PRIOR TO ROUGH-IN.
11. PROVIDE 100A/3P/N/F/N1 SAFETY DISCONNECT RATED FOR 20 HP MINIMUM FOR CASCADE COMPRESSOR. FIELD COORDINATE EXACT LOCATION AND ADDITIONAL EQUIPMENT REQUIREMENTS WITH INSTALLER PRIOR PLACEMENT.
12. PROVIDE WEATHER PROOF BACK BOX FOR WALL MOUNTED CALL BUTTON. FIELD COORDINATE EXACT LOCATION AND ADDITIONAL REQUIREMENTS WITH TECHNOLOGY PRIOR TO ROUGH-IN. EXTEND (1) 1" CONDUIT WITH PULLSTRING FROM BACK BOX TO UP ABOVE CEILING.
13. PROVIDE 120V WEATHER PROOF JUNCTION BOX FOR CARD READER. FIELD COORDINATE EXACT LOCATION WITH ARCHITECT/ OWNER.
14. FIRE ALARM REMOTE ANNUNCIATOR. COORDINATE EXACT LOCATION WITH OWNER BEFORE ROUGH-IN.
15. GENERATOR REMOTE ANNUNCIATOR. COORDINATE EXACT LOCATION WITH OWNER BEFORE ROUGH-IN.
16. PROVIDE EMERGENCY PUSH BUTTON, BUTTON SHALL DISCONNECT ALL ELECTRICAL CIRCUITS SERVING ABOVE COUNTER RECEPTACLES, RANGE, MICROWAVE AND SHUT GAS DOWN SERVING RANGE. FIELD COORDINATE EXACT LOCATION WITH ARCHITECT/OWNER PRIOR TO ROUGH-IN.
17. 120V JUNCTION BOX CONNECTION FOR RANGE HOOD LIGHTS. FIELD COORDINATE EXACT LOCATION AND ADDITIONAL REQUIREMENTS WITH ARCHITECT/OWNER PRIOR TO ROUGH-IN. PROVIDE ADA COMPLIANT SWITCHES FOR HOOD AND HOOD LIGHT.
18. PROVIDE POWER FOR FIRE SUPPRESSION SYSTEM. SYSTEM IS TO BE TIED INTO FIRE ALARM CONTROL PANEL.
19. PROVIDE JUNCTION BOX FOR ALERTING SYSTEM DEVICE PROVIDED BY OTHERS. PROVIDE CONDUIT TO ABOVE ACCESSIBLE CEILING AREA. COORDINATE WITH ARCHITECT AND OWNER PRIOR TO ROUGH-IN.
20. VERIFY EXACT NEMA CONFIGURATION WITH EQUIPMENT MANUFACTURER PRIOR TO INSTALLATION.
21. EXTEND CIRCUIT TO INTEGRAL FAN -MOUNTED MOTOR RATED TOGGLE SWITCH. FAN TO BE INTERLOCKED WITH DEDICATED SWITCH/THERMOSTAT IN ASSOCIATED ROOM. COORDINATE WITH DIVISION 23.
22. PROVIDE CONNECTION TO INFRARED HEATER DISCONNECT SWITCH, PROVIDED BY DIVISION 23. COORDINATE EXACT LOCATION OF DISCONNECT SWITCH WITH MECHANICAL.
23. EXTEND APPLIANCE CIRCUIT THROUGH GFI CIRCUIT BREAKER.
24. GENERATOR DOCKING STATION. REFER TO ELECTRICAL ONE-LINE DIAGRAM FOR ADDITIONAL INFORMATION.
25. PROVIDE UNI-STRUT RACK FOR MOUNTING ELECTRICAL EQUIPMENT. RACK WIDTH AND DISTANCE BETWEEN CROSS MEMBER AS REQUIRED TO FIT EQUIPMENT.
26. COMBINATINO MOTOR STARTER/DISCONNECT SWITCH PROVIDED BY DIVISION 23, INSTALLED BY DIVISION 26.
27. FOLDING DOOR MANUFACTURER TO PROVIDE CONTROL PANEL. REFER TO MANUFACTURER SPECIFICATIONS FOR ALL NECESSARY RELAYS AND COMPONENTS FOR A COMPLETE WORKING SYSTEM.
28. MINI-SPLIT INDOOR EVAPORATOR UNIT SHALL RECEIVE POWER FROM ASSOCIATED OUTDOOR CONDENSING UNIT WITH FIELD SUPPLIED WIRING.
29. PROVIDE ROUGH-IN FOR EMERGENCY CALL-BOX AND EXTEND A 1" CONDUIT TO ABOVE ACCESSIBLE CEILING. COORDINATE ROUGH-IN SIZE AND LOCATION WITH OWNER/ARCHITECT AND TECHNOLOGY PRIOR TO ROUGH-IN.

1 E201 **LEVEL 1 POWER PLAN**
1/8" = 1'-0"

ELECTRICAL GENERAL NOTES

A. ELECTRICAL CONTRACTOR SHALL GROUP HOMERUNS WITH THREE HOTS (A,B, AND C PHASE), AND #10 NEUTRAL TO PROVIDE MULTI-WIRE BRANCH CIRCUITS. NO MORE THAN 1 MULTI-WIRE HOMERUNS PER CONDUIT. CONTRACTOR SHALL PROVIDE HANDLE TIES MANUFACTURED BY THE SWITCH GEAR SUPPLIER ON ALL MULTI-WIRE CIRCUITS TO MEET THE REQUIREMENTS OF ARTICLE 210.4(B) OF THE 2017 NEC. AT THE CONTRACTOR'S OPTION, TWO AND THREE POLE BREAKERS MAY BE USED.

B. CONTRACTOR SHALL VERIFY DEVICE LOCATIONS WITH ARCHITECT PRIOR TO ROUGH-IN. REFER TO ARCHITECTURAL CASEWORK AND MILLWORK ELEVATIONS.

C. ELECTRICAL CONTRACTOR SHALL PROVIDE CONDUIT, OUTLET BOXES, JUNCTION BOXES FOR ALL TECHNOLOGY DEVICE OUTLETS. REFER TO DIVISION 28 SPECIFICATIONS AND TECHNOLOGY DRAWINGS FOR ALL WORK REQUIRED.

D. HVAC AND PLUMBING EQUIPMENT MAY DIFFER FROM LOCATIONS AS SHOWN ON ELECTRICAL DRAWINGS. COORDINATE EXACT LOCATIONS WITH MECHANICAL AND PLUMBING CONTRACTOR.

ELECTRICAL GENERAL NOTES (CONTINUED)

E. ENGRAVE ALL COVER PLATES WITH PANEL NAME AND CIRCUIT NUMBER. PROVIDE SEPARATE PRICE FOR THIS WORK. CONTRACTOR SHALL ARRANGE PANEL BOARDS TO PROVIDE CLEARANCE PER NEC 110.26.

F. ALL SINGLE-PHASE RECEPTACLES RATED 150 VOLTS TO GROUND, OR LESS, 50 AMPERES OR LESS AND THREE-PHASE RECEPTACLES RATED 150 VOLTS TO GROUND OR LESS, 100A OR LESS, IN FOOD SERVICE AREAS, BATHROOMS, ROOFTOPS, OUTDOORS, INDOOR WET LOCATIONS, LOCKER ROOMS, OR CRAWL SPACES SHALL BE GFCI, IN ACCORDANCE WITH NEC 210.8(B).

G. ELECTRICAL CONTRACTOR TO COORDINATE WITH PURVIS INSTALLER FOR ALL REQUIREMENTS PRIOR TO ROUGH-IN.

H. ELECTRICAL CONTRACTOR SHALL PROVIDE CONTACTOR FOR SHUTOFF TO ELECTRIC/GAS OVEN. MUST BE TIED INTO PURVIS SYSTEM. MANUAL RESET FOR GAS AND ELECTRICAL SHUTOFFS BY ELECTRICAL CONTRACTOR.

I. GARAGE BAY EXHAUST FANS SHALL BE PROVIDED WITH A COMBINATION MOTOR STARTER/DISCONNECT SWITCH BY DIVISION 23, INSTALLED BY DIVISION 26.

TRUE NORTH / PROJECT NORTH

DBR
9601 McAllister Freeway, Suite 410
San Antonio, Texas 78216
210.546.0200 v 210.546.0201 f
TBPE Firm Registration No. 2234

DBR Project Number 196024.000

JC | BV | DA | WJ | JC

PROFESSIONAL SEAL

STATE OF TEXAS
M. JACQUELINE CHANG
124987
LICENSED
PROFESSIONAL ENGINEER
10/01/2020

martinez ARCHITECTS
Martinez Architect, LP
900 Rockmead, Suite 250
Houston, Texas 77339
281.346.7371

DESIGN TEAM

Architectural
Martinez Architects

Civil Engineer
Maverick Engineering

Structural
Matrix Structural engineers

MEP/FP
DBR

Landscape Architect
KDC Associates

FIRE STATION #11

CITY OF MIDLAND
6600 BRIARWOOD AVE
MIDLAND, TX 79707

PROJECT No: **MA 18017**
DATE: **01/30/2020**

No.	Date	Description
	01/30/2020	100% CD
4	02/26/2020	Addendum 04

LEVEL 1 POWER PLAN

E201

4.1791

SPD SCHEDULE

MARK	MANUFACTURER	MODEL	VOLTAGE	PER MODE/PHASE	PHASE	BREAKER SIZE	ACCUGUIDE CABLE SIZE
SPD1	ASCO (LIEBERT)	560120YP16ACCG10	208/120	80/160KA	3	60A/3P	5 #10, 1-1/2" C.

ELECTRICAL SERVICE SCOPE:

THE CONTRACTOR SHALL BE RESPONSIBLE FOR DELIVERY OF SERVICE TO THE NEW BLDG. COORDINATE ALL REQUIREMENTS AND COSTS AND LABOR W/ LOCAL UTILITY PRIOR TO BID. ALL COSTS ASSOCIATED W/ THE DELIVERY OF ELECTRICAL SERVICE SHALL BE INCLUDED AS A PART OF THIS CONTRACT. REFER TO SPECIFICATIONS FOR ADDITIONAL REQUIREMENTS.

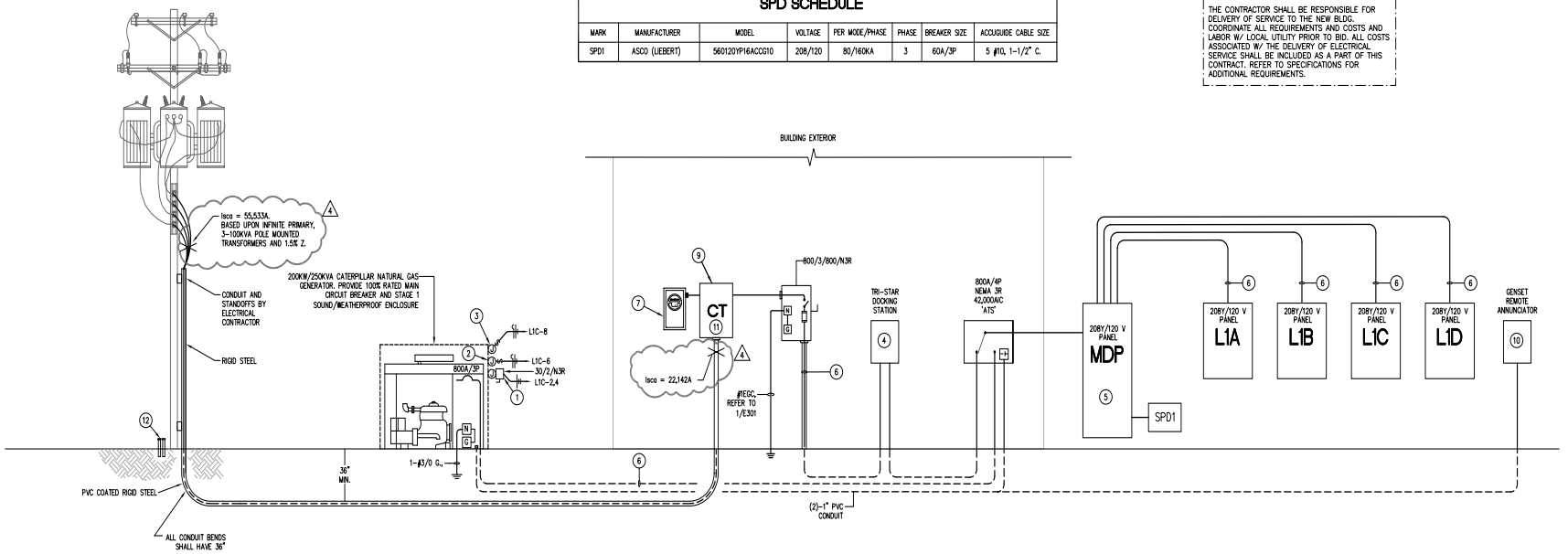

1 E401 ELECTRICAL ONE-LINE DIAGRAM

NOT TO SCALE

LOAD ANALYSIS - MIDLAND FIRE STATION #11

208 / 120, 3 -PHASE 4 -WIRE — Date: 2/26/2020

DESCRIPTION	12,025 S.F.		NEC	KVA
LIGHTING:				
INTERIOR =	12,025 S.F.	3 VA/S.F. X 125%	210.20(a)	45.1
EXTERIOR =	500 VA X 125%			0.6
POWER:				
RECEPTACLES =	11,099 S.F.	1 VA/S.F.	220.44	11.1
MISCELLANEOUS =	12,025 VA	1 VA/S.F.		12.0
ELEVATOR =	22,373 VA			22.4
HVAC:				
FANS =	12,384 VA			24.8
COOLING =	28,397 VA		220.60	0.0
HEATING=	38,300 VA		220.60	38.3
	Load	Quantity		
Cascade Equipment	31,000 VA X	1.0		31.0
Compressor	12,000 VA X	1.0		12.0
Overhead Door	1,200 VA X	3.0		3.6
Range	8,000 VA X	1.0		8.0
Hood	800 VA X	1.0		0.8
Washer	1,200 VA X	1.0		1.2
Dryer	4,000 VA X	1.0		4.0
Extractor/Washer	8,000 VA X	1.0		8.0
25% LARGEST MOTOR =	5,593 VA		430.24	5.6
PLUMBING:				
WATER HEATER =	12,000 VA			12.0
			TOTAL =	240.5
			TOTAL AMPS:	667.5
SQUARE FOOTAGE = 12,025			SERVICE SIZE:	800.0
			SPARE AMPACITY	132.5

SERVICE LATERAL AND FEEDER SCHEDULE (COPPER ONLY)

AMPERAGE	SETS	CONDUCTOR SIZE	CONDUIT (INCHES)
30A	1	4#10, 1#10 G.	3/4"C
40A	1	4#8, 1#10 G.	1"C
50A	1	4#8, 1#10 G.	1"C
60A	1	4#6, 1#10 G.	1"C
70A	1	4#4, 1#8 G.	1 1/4"C
80A	1	4#4, 1#8 G.	1 1/4"C
90A	1	4#3, 1#8 G.	1 1/4"C
100A	1	4#3, 1#8 G.	1 1/4"C
125A	1	4#1, 1#6 G.	1 1/2"C
150A	1	4#1/0, 1#6 G.	1 1/2"C
175A	1	4#2/0, 1#6 G.	2"C
200A	1	4#3/0, 1#6 G.	2"C
225A	1	4#4/0, 1#4 G.	2 1/2"C
250A	1	4#250KCML, 1#4 G.	2 1/2"C
300A	1	4#350KCML, 1#4 G.	3"C
350A	1	4#500KCML, 1#3 G.	3 1/2"C
400A	1	4#600KCML, 1#3 G.	4"C
450A	2	4#4/0, 1#2 G.	2 1/2"C
500A	2	4#250KCML, 1#2G.	2 1/2"C
600A	2	4#350KCML, 1#1G.	3"C
800A	2	4#600KCML, 1#1/0G.	4"C

1. ELECTRICAL CONTRACTOR SHALL PROVIDE THE NUMBER OF LUGS AND PROPER LUG SIZES TO ACCEPT CONDUCTOR SIZES SHOWN.
2. DO NOT PROVIDE GROUNDING CONDUCTOR IN SERVICE LATERAL FROM POWER COMPANY TRANSFORMER.
3. CONTRACTOR SHALL INCREASE FEEDERS IN SIZE TO COMPENSATE FOR VOLTAGE DROP. FEEDERS SHALL BE SIZED TO MAINTAIN A 2% OR LESS VOLTAGE DROP ON FEEDERS AND A 3% OR LESS VOLTAGE DROP ON BRANCH CIRCUITS.

ONE-LINE DIAGRAM GENERAL NOTES:

A. MANUFACTURER OF ELECTRICAL GEAR SHALL PROVIDE A COORDINATION STUDY FOR THE ENTIRE ELECTRICAL SYSTEM IN ORDER TO SET BREAKERS. REFER TO SPECIFICATIONS. MANUFACTURER SHALL ALSO PROVIDE A FAULT CURRENT/ARC FAULT STUDY FOR THE ENTIRE ELECTRICAL SYSTEM IN ORDER TO SELECT INTERRUPTING RATINGS OF ALL CIRCUIT BREAKERS, DISTRIBUTION PANELBOARDS, PANELBOARDS, ETC. A FULLY RATED SYSTEM SHALL BE USED.

B. CONTRACTOR SHALL PROVIDE AN ENGRAVED NAMEPLATE ON ALL NEW ELECTRICAL EQUIPMENT INDICATION EQUIPMENT VOLTAGE,AMPERAGE AND AVAILABLE SHORT CIRCUIT RATING PER 2018 NEC.

C. METERING EQUIPMENT ENCLOSURE PROVIDED BY ENCOR, INSTALLED BY ELECTRICAL CONTRACTOR PER ENCOR'S SPECIFICATIONS. METER INSTALLED BY ENCOR.

D. ALL CONDUCTORS SHALL BE COPPER.

E. CONTRACTOR SHALL INSTALL FEEDERS BASED ON THE OVERCURRENT DEVICE RATING UNLESS OTHERWISE NOTED. CONTRACTOR SHALL REFER TO THE FEEDER SCHEDULE TO OBTAIN AND INSTALL THE FEEDERS REQUIRED.

F. PRIOR TO INSTALLATION OF UNDERGROUND FEEDERS, THE ELECTRICAL CONTRACTOR SHALL SUBMIT AN UNDERGROUND ROUTING PLAN TO THE ENGINEER OF RECORD., INDICATING THE EXACT ROUTING PATH FOR ALL UNDERGROUND CONDUIT. INDICATE STUB-UP LOCATIONS, SIZE AND QUANTITY OF CONDUIT. ALL ELECTRICAL PANELS AND EQUIPMENT SHALL BE SHOWN ON THIS PLAN FOR REFERENCE OF CONDUIT TERMINATION.

ELECTRICAL KEYED NOTES:

1. 208V JUNCTION BOX CONNECTION TO GENERATOR'S JACKET HEATER. FIELD COORDINATE EXACT LOCATION AND ADDITIONAL MANUFACTURER'S REQUIREMENTS WITH GENERATOR INSTALLER PRIOR TO ROUGH-IN.
2. 120V JUNCTION BOX CONNECTION FOR GENERATOR'S ANTI-CONDENSATION HEATER, FIELD COORDINATE EXACT LOCATION AND ADDITIONAL MANUFACTURER'S REQUIREMENTS WITH GENERATOR INSTALLER PRIOR TO ROUGH-IN.
3. 120V JUNCTION BOX CONNECTION FOR BATTERY CHARGER. FIELD COORDINATE EXACT LOCATION AND ADDITIONAL MANUFACTURER'S REQUIREMENTS WITH GENERATOR INSTALLER PRIOR TO ROUGH-IN.
4. PROVIDE 800A TRYSTAR DOCKING STATION AND MANUAL TRANSFER SWITCH FOR TEMPORARY GENERATOR/LOAD BANK.
5. REFER TO SCHEDULE ON SHEET E502 FOR CIRCUIT BREAKER SIZES.
6. REFER TO FEEDER SCHEDULES ON THIS SHEET FOR WIRE AND CONDUIT SIZE AND QUANTITIES.
7. METER BOX FOR CT RATED METER PROVIDED BY ENCOR, INSTALLED BY ELECTRICAL CONTRACTOR PER ENCOR'S SERVICE STANDARDS.
8. NOT USED.
9. METERING POTENTIAL TRANSFORMER BOX PROVIDED BY ENCOR, INSTALLED BY ELECTRICAL CONTRACTOR PER ENCOR'S SERVICE STANDARDS.
10. COORDINATE EXACT LOCATION OF GENERATOR ANNUNCIATOR PANEL WITH ARCHITECT/OWNER.
11. COORDINATE WITH ENCOR FOR ALL UTILITY STANDARDS.
12. PROVIDE (2) 2" RIGID CONDUITS ON RISER POLE FOR TELECOMMUNICATION CABLING AND CABLE SERVICE. COORDINATE ADDITIONAL REQUIREMENTS WITH OWNER SELECTED PROVIDER. REFER TO MEP SITE PLAN FOR APPROXIMATE ROUTING.

DBR
9601 McAllister Freeway, Suite 410
San Antonio, Texas 78216
210.546.0200 v 210.546.0201 f
TBPE Firm Registration NO. 2234

DBR Project Number 196024.000

JC	BV	DA	WJ	JC

PROFESSIONAL SEAL

STATE OF TEXAS — M. JACQUELINE CHANG — 124987 — LICENSED PROFESSIONAL ENGINEER — 01/30/2020

martinez ARCHITECTS
Martinez Architect, LP
900 Rockmead, Suite 250
Houston, Texas 77339
281.346.7371

DESIGN TEAM

Architectural
Martinez Architects

Civil Engineer
Maverick Engineering

Structural
Matrix Structural Engineers

M/E/P/T
DBR

Landscape Architect
KDC Associates

FIRE STATION #11

CITY OF MIDLAND
6600 BRIARWOOD AVE
MIDLAND, TX 79707

PROJECT No: MA 18017
DATE: 01/30/2020

No.	Date	Descrptn
	01/30/2020	100% CD
4	02/26/2020	Addendum 04

ELECTRICAL ONE-LINE DIAGRAM

E401

4.1792

LIGHTING FIXTURE SCHEDULE

TAG	MANUFACTURER	MODEL	MOUNTING	LAMP	VOLTAGE	APPARENT POWER	DESCRIPTION
B1	PHILIPS - DAYBRITE	2FGG-38L-835-2-DS-UNV-DIM	RECESSED	3500K LED	UNIVERSAL	34 VA	2X2 VOLUMETRIC FIXTURE WITH 3800 LUMENS AND 3500K.
D1	LIGHTOLIER	4RN-C4L15835MZ10U-C4RSLCL	RECESSED	3500K LED	UNIVERSAL	16 VA	4" MEDIUM BEAM LENSED DOWNLIGHT WITH 1500 LUMENS AND 3500K.
D2	LIGHTOLIER	4RN-C4L15840MZ10U-C4RSLCL-C4RVPWH	RECESSED	4000K LED	UNIVERSAL	16 VA	SAME AS FIXTURE TYPE D1 EXCEPT WITH IP65 RATING AND 4000K.
D3	LIGHTOLIER	4RN-C4L30840MZ10U-C4RSLCL-C4RVPWH	RECESSED	4000K LED	UNIVERSAL	31 VA	SAME AS FIXTURE TYPE D2 EXCEPT WITH 3000 LUMENS.
D4	VERSALED LIGHTING	VP3-Q-S-10L-QT-40K	SURFACE	4000K LED	UNIVERSAL	16 VA	VAPOR PROOF JELLY JAR FIXTURE WITH 800 LUMENS AND 4000K.
F1	PHILIPS - DAYBRITE	FSS455L835-UNV-DIM	SURFACE	3500K LED	UNIVERSAL	45 VA	4' STRIP FIXTURE WITH 5500 LUMENS AND 3500K.
F2	APOLLO	VTOD1-4-F1-UNV-FDXX-ST-FR-840-SS-C-SZC	SURFACE	4000K LED	UNIVERSAL	235 VA	4' WASH BAY FIXTURE WITH 36,000 LUMENS AND 4000K.
H1	PHILIPS - DAYBRITE	FBX36L35-UNV-LFR	SURFACE	3500K LED	UNIVERSAL	255 VA	4' HIGH BAY FIXTURE WITH 36,000 LUMENS AND 3500K.
P1	LIGHTOLIER	C6RDL-15835W210UCDW-CACK10WH	PENDANT	3500K LED	UNIVERSAL	15 VA	6" DECORATIVE PENDANT WITH 1,500 LUMENS AND 3500K.
S1	B-K LIGHTING	TY2-LED-X51-NFL-DS7-MT	FLUSH IN-GRADE	4000K LED	UNIVERSAL	57 VA	4" FLUSH MOUNTED IN-GRADE FLAG POLE FIXTURE WITH 5,500 LUMENS AND 4,000K.
W1	PHILIPOS - GARDCO	101L-16L-700-NW-G1-3-UNV-DD-FI1-WH	WALL	4000K LED	UNIVERSAL	26 VA	EXTERIOR WALL SCONCE WITH 3,200 LUMENS AND 4000K.
W2	EDWARDS SIGNALING	105XBRMA120A-105BM-105BX	WALL	AMBER LED	120V	12 VA	APPARATUS BAY DOOR FLASHERS.
X1	SIGNIFY	CLXARW	UNIVERSAL	LED	UNIVERSAL	1 VA	UNIVERSAL EXIT SIGN WITH CHEVRONS AS INDICATED ON PLANS.

LIGHTING FIXTURE SCHEDULE GENERAL NOTES

A. IT SHALL BE THE RESPONSIBILITY OF THE CONTRACTOR TO CONFIRM THE COMPATIBILITY BETWEEN THE CEILING TYPE, AS DEFINED ON THE ARCHITECTURAL ROOM FINISH SCHEDULE, AND THE LIGHTING FIXTURE TRIM AS DEFINED ON THE LIGHTING FIXTURE SCHEDULE. NO CHANGES OR DEVIATIONS SHALL BE MADE FROM THE CONTRACT DOCUMENTS, HOWEVER, WITHOUT THE WRITTEN APPROVAL OF THE ENGINEER/ARCHITECT.

B. EQUIVALENT PRODUCTS BY THE FOLLOWING MANUFACTURER'S MAY BE ACCEPTABLE AS ALTERNATE SUBSTITUTIONS (ALTERNATE PRODUCTS SHALL HAVE SUFFICIENT DATA FOR REVIEW AND APPROVAL, INCLUDING POINT-BY-POINT ELECTRONIC CALCULATIONS): ACUITY, PHILIPS-DAYBRITE, PHILIPS-LIGHTOLIER, PHILIPS-GARDCO, LSI AND WILLIAMS.

C. ALL LIGHTING FIXTURE COLOR FINISHES/PATTERNS MUST BE SELECTED BY THE ARCHITECT FROM THE MANUFACTURER'S FULL RANGE. THE GENERAL CONTRACTOR IS TO CONFIRM ALL COLORS WITH THE ARCHITECT PRIOR TO ORDERING. ALL FIXTURE COLORS NOT CONFIRMED, SHALL BE CORRECTED AT THE GC'S COST.

D. CONFIRM ALL FIXTURE MOUNTING HEIGHTS WITH THE ARCHITECTURAL DETAILS AND ELEVATIONS PRIOR TO ROUGH-IN.

LIGHTING CONTROL DEVICE SCHEDULE

TAG	DESCRIPTION	MANUFACTURER	MODEL NUMBER	VOLTAGE	CONTROL FUNCTION
D	DIMMER WALL SWITCH	DOUGLAS LIGHTING	WRD-8701	LOW VOLTAGE	1-BUTTON ON/OFF WITH DIMMER
DS	CEILING/STRUCTURE MOUNTED PHOTO SENSOR	DOUGLAS LIGHTING	WOSSDD2-DPR-VW	LOW VOLTAGE	PHOTO SENSOR TO AUTOMATICALLY DIM LIGHT FIXTURES WITHIN DAY LIGHT ZONE ACCORDING TO AMOUNT OF DAYLIGHT PRESENT
F	FAN SPEED CONTROLLER			LOW VOLTAGE	
LV1	DIGITAL WALL SWITCH (1-BUTTON WITH DIMMER)	DOUGLAS LIGHTING	WSD-3501	LOW VOLTAGE	1-BUTTON ON/OFF WITH DIMMER, ZONES INDICATED ON DRAWING
OC	OCCUPANCY SENSOR WALL SWITCH	DOUGLAS LIGHTING	WOSSIU1-N-VW	LOW VOLTAGE	1-BUTTON ON/OFF WALL SWITCH SENSOR WITH AUTOMATIC ON TO 100%
OC1	CEILING/STRUCTURE MOUNTED OCCUPANCY SENSOR	DOUGLAS LIGHTING	WORSDU1-P-N	LOW VOLTAGE	AUTOMATICALLY TURN ON LIGHTS TO 100%, TURNS OFF LIGHTS AFTER 20 MINUTES OF INACTIVITY
OC2	CEILING/STRUCTURE MOUNTED OCCUPANCY SENSOR	DOUGLAS LIGHTING	WORSDD2-DPR-L	LOW VOLTAGE	AUTOMATICALLY TURN ON LIGHTS TO NOT MORE THAN 50%, TURNS OFF LIGHTS AFTER 20 MINUTES OF INACTIVITY
OC3	CEILING/STRUCTURE MOUNTED OCCUPANCY SENSOR (HIGH BAY)	DOUGLAS LIGHTING	WORBID2-DPR-L	LOW VOLTAGE	AUTOMATICALLY TURN ON LIGHTS TO 100%, TURNS OFF LIGHTS AFTER 20 MINUTES OF INACTIVITY
RC	ROOM CONTROLLER	DOUGLAS LIGHTING	WRC-3160	LINE VOLTAGE	ZONE INDICATED ON/OFF, ZONE INDICATED DIM UP/DOWN
T	SPRING WOUND TIMER	DOUGLAS LIGHTING		LINE VOLTAGE	LINE VOLTAGE TIMER SWITCH
VC	OCCUPANCY SENSOR WALL SWITCH	DOUGLAS LIGHTING	WOSSIU1-N-VW	LOW VOLTAGE	1-BUTTON ON/OFF WALL SWITCH SENSOR WITH AUTOMATIC OFF AFTER 20 MINUTES OF INACTIVITY

LIGHTING CONTROL DEVICE SCHEDULE GENERAL NOTES

A. REFER TO LIGHTING PLANS FOR ZONE CONTROL INFORMATION AND DEVICE LOCATIONS.

B. ALL DEVICE LOCATIONS SHALL BE COORDINATED WITH OWNER/ARCHITECT PRIOR TO ROUGH-IN.

C. PROVDIE ALL NECESSARY COMPONENTS FOR A FULLY FUNCTIONAL SYSTEM.

LIGHTING CONTROLS/COMMISSIONING PLAN

THE CONTRACTOR SHALL INCLUDE, AS PART OF THEIR SCOPE, THE REQUIREMENTS TO COMMISSION THE LIGHTING CONTROL SYSTEM, AS REQUIRED BELOW. THE LIGHTING CONTROL SYSTEM MAY BE STAND-ALONE, NETWORK, RELAY, CONTACTOR OPERATED, TIMER, PHOTOCELL, OR ANY COMBINATION OF THESE LISTED. FOR EACH OF THE FOLLOWING TASKS, RECORD THE DATE PERFORMED, PERSON(S) COMPLETING THE VERIFICATION, INTIAL SETTING/CONDITION, ACTIONS PERFORMED, AND FINAL SETTING CONDITION. SUBMIT DOCUMENTATION TO THE CITY HAVING JURISDICATION AT OR BEFORE SUBSTANTION COMPLETION. SUBMITTING AFTER SUBSTANTION COMPLETION WILL DELAY THE ISSUANCE OF A CERTIFICATE OF OCCUPANCY.

A. ENSURE ALL LIGHTING FIXTURES HAVE LAMPS THAT ARE FUNCTIONAL.

B. TEST ALL EXIT SIGNS, EMERGENCY LIGHTING FIXTURES, AND EMERGENCY TRANSFER DEVICES OR BATTERY BACKUPS THAT ARE INTEGRAL OR REMOTE.

C. VERIFY THAT ALL OCCUPANCY SENSORS HAVE BEEN INSTALLED AND ARE OPERATIONS.

D. TEST ALL WALL-SWITCH OCCUPANCY SENSORS.

E. TEST ALL DIGITAL/LOW VOLTAGE SWITCHES AND THEIR PERIPHERALS, WHERE INSTALLED, SUCH AS:
   a. OCCUPANCY SENSORS
   b. POWER PACKS
   c. DAYLIGHT SENSORS

F. VERIFY THE FOLLOWING FUNATIONALITY AND/OR INSTALLATION OF ALL CONTROL DEVICES:
   a. SENSORS HAVE BEEN LOCATED AND AIMED TO RELEVANT LOCATIONS OF OCCUPANCY, PER MANUFACTURERS RECOMMENDATION.
   b. VERIFY STATUS INDICATORS ON DEVICES ARE OPERATIONAL AND CORRECT.
   c. DEVICES CONTROL LIGHTING FIXTURES AS SPECIFIED ON THE DRAWINGS.
   d. ALL OCCUPANCY/VACANCY MODE TIME-OUTS ARE SET TO NO GREATER THAN 30 MINUTES.
   e. ALL CONTROL DEVICES ARE SET VACANCY MODE, OR NO MORE THAN 50% OF FIXTURES TURN ON AUTOMATICALLY UPON ENTERING A SPACE/ROOM.
   f. MOVEMENT IN ADJACENT SPACES OR CYCLING OF HVAC SYSTEMS DOES NOT FALSELY TRIGGER SENSORS (VACANCY MODE PREFERRED TO PREVENT THIS).

G. SHOULD ADDITIONAL INFORMATION REGARDING THE TESTING REQUIREMENTS BE NEEDED, REFERENCE IECC 2015 SECTION 408.3.

DBR
9601 McAllister Freeway, Suite 410
San Antonio, Texas 78216
210.546.0200 v 210.546.0201 f
TBPE Firm Registration No. 2234

DBR Project Number 196024.000

JC | BV | DA | WJ | JC

PROFESSIONAL SEAL

STATE OF TEXAS
M. JACQUELINE CHANG
124987
LICENSED
PROFESSIONAL ENGINEER
01/30/2020

martinez ARCHITECTS
Martinez Architect, LP
900 Rockmead, Suite 250
Houston, Texas 77339
281.346.7371

DESIGN TEAM

Architectural
Martinez Architects

Civil Engineer
Maverick Engineering

Structural
Matrix Structural engineers

M/E/P/T
DBR

Landscape Architect
KDC Associates

FIRE STATION #11
CITY OF MIDLAND
6600 BRIARWOOD AVE
MIDLAND, TX 79707

PROJECT No: **MA 18017**
DATE: **01/30/2020**

No.	Date	Description
	01/30/2020	100% CD
4	02/26/2020	Addendum 04

ELECTRICAL SCHEDULES

E501

4.1793

Panelboard MDP

42000 AIC Rating
X New
Existing

120/208 Wye Volt, 3 Phase, 4 Wire
1 Section
Type 1 -Nema Rating

Mains Type: MLO

0 A MCB
600 A BUS (Copper)
ISO. GRND. BUS

X Single
Double
Feed - Thru

Mounting
X Surface
Flush

Note	Load...	Type	Description	Wire	CB	CKT	CB	Wire	Description	Type	Load...	N...
	28882 VA	Other; L: R; EL:...	Panel L1A	4/0	225 A	1 2 3 4 5 6	50 A	8	Air Compressor: Utility 133	MT	0 VA	
	47830 VA	R; MT; M	Panel L1B	4/0	225 A	7 8 9 10 11 12	100 A	3	Cascade Machine: Shop 135	M	22336 VA	
	41496 VA	R; F; H; MT; M	Panel L1C	4/0	225 A	13 14 15 16 17 18	60 A	6	Extractor: Utility 133	MT	10800 VA	
	57165 VA	L; R; SP; C; H...	Panel L1D	4/0	225 A	19 20 21 22 23 24	35 A	8	Exhaust Fan EF-7	F	6305 VA	
	--	--	Space	--	--	25 26	--	--	Space	--	--	
	--	--	Space	--	--	27 28	--	--	Space	--	--	
	--	--	Space	--	--	29 30	--	--	Space	--	--	
	--	--	Space	--	--	31 32	--	--	Space	--	--	
	--	--	Space	--	--	33 34	--	--	Space	--	--	
	--	--	Space	--	--	35 36	--	--	Space	--	--	
	--	--	Space	--	--	37 38						
	--	--	Space	--	--	39 40	60 A	6	SPD1	SP	0 VA	
	--	--	Space	--	--	41 42						

N.E.C. (2017)	Load Type	Conn.	Fct.	Diversity	N.E.C.(2017)	Load Type	Conn.	Fct.	Diversity
220.44	(R)Receptacle	33260 VA	65.03%	21630 VA	210.20(a)	(L)Lighting	9557 VA	125.00%	11946 VA
220.56	(K)Kitchen					(EL)Ext. Ltg.	1074 VA	125.00%	1343 VA
220.60	(C)Cooling	30663 VA	100.00%	0 VA	620.14	(E)Elevators			
220.60	(H)Heating	40660 VA	100.00%	40660 VA		(WH)Wat. Htr.			
220.60	(F)Fans	9281 VA	100.00%	9281 VA	220.5	(MT)Lrg. Motor	50867 VA	105.31%	53567 VA
	(M)Misc.	59876 VA	100.00%	59876 VA		(SP)Sub Pnl.	8736 VA	100.00%	8736 VA

Total Connected Load: 243974 VA VA = 677 A
Total Load (Diversified): 207039 VA VA = 575 A

Location of Panel: ELEC. 112

Panelboard L1A

22000 AIC Rating
X New
Existing

120/208 Wye Volt, 3 Phase, 4 Wire
1 Section
Type 1 -Nema Rating

Mains Type: MLO

0 A MCB
225 A BUS (Copper)
ISO. GRND. BUS

X Single
Double
Feed - Thru

Mounting
X Surface
Flush

Note	Load...	Type	Description	Wire	CB	CKT	CB	Wire	Description	Type	Load...	N...
	720 VA	R	Receptacles: Exterior Perimeter	12	20 A	1 2	20 A	12	Lighting: Flag Pole	EL	228 VA	
	540 VA	R	Receptacles: Exterior Perimeter	12	20 A	3 4	20 A	12	Monument Sign	EL	600 VA	
	720 VA	R	Receptacles: Exterior Perimeter	12	20 A	5 6	20 A	12	Lighting: Exterior Egress	L; EL	254 VA	
	--	--	Spare	--	20 A	7 8	20 A	12	Lighting: Exterior Perimeter	EL	52 VA	
	--	--	Spare	--	20 A	9 10	20 A	12	Lighting: Apparatus Bay Flashers	L	96 VA	
	--	--	Spare	--	20 A	11 12	20 A	12	Lighting: Apparatus Bay	L	765 VA	
	1080 VA	R	Turnout Timer: Apparatus Bay	12	20 A	13 14	20 A	12	Lighting: Apparatus Bay	L	765 VA	
	1080 VA	R	Turnout Timers: Apparatus Bay	12	20 A	15 16	20 A	12	Lighting: Apparatus Bay	L	765 VA	
	540 VA	R	Receptacles: Apparatus Bay	12	20 A	17 18	20 A	12	Lighting: Apparatus Bay	L	799 VA	
	540 VA	R	Receptacles: Apparatus Bay	12	20 A	19 20	20 A	12	Lighting: Apparatus Bay	L	765 VA	
	360 VA	R	Receptacles: Apparatus Bay	12	20 A	21 22	20 A	12	Lighting: Entry and Hallway	L	577 VA	
	--	--	Spare	--	20 A	23 24	20 A	12	Lighting: Mezzanine	L	340 VA	
	1000 VA	M	Treadmill: Excercise 137	12	20 A	25 26	20 A	12	Lighting: Gear Room 134	L	1021 VA	
	1000 VA	M	Stair Climber: Excercise 137	12	20 A	27 28	20 A	12	Lighting: Electrical 112	L	1360 VA	
	180 VA	M	TV: Excercise 137	12	20 A	29 30	20 A	12	Lighting: Kitchen/Dinning/Day Rm	L	555 VA	
	180 VA	M	TV: Excercise 137	12	20 A	31 32	20 A	--	Spare	--	--	
	720 VA	R	Receptacles: Excercise 137	12	20 A	33 34	20 A	12	Washer: Utility 133	R	1200 VA	
	--	--	Spare	--	20 A	35 36	30 A	10	Dryer: Utility 133	M	4000 VA	
1	500 VA	M	FACP: Electrical 112	12	20 A	37 38						
	540 VA	R	Receptacles: Electrical 112	12	20 A	39 40	20 A	12	Receptacles: Utility 133	Oth...	720 VA	
2	540 VA	MT	Circulation Pump: Utility 133	12	20 A	41 42	20 A	12	Receptacles: Entry 101	R	720 VA	
	360 VA	M	Vestibule Call-Box	12	20 A	43 44	20 A	12	Computers: Office 102	R	1080 VA	
	--	--	Space	--	--	45 46	20 A	12	Printer: Apparatus Bay	R	180 VA	
	--	--	Spare	--	20 A	47 48	20 A	12	Zetron Power: Apparatus Bay	R	180 VA	1
	--	--	Spare	--	20 A	49 50	20 A	12	Receptacles: Shop 135	R	360 VA	
	--	--	Spare	--	20 A	51 52	20 A	12	Receptacles: Shop 135	R	360 VA	
	--	--	Spare	--	20 A	53 54	20 A	12	Receptacles: Fire/Riser 140	R	540 VA	

N.E.C. (2017)	Load Type	Conn.	Fct.	Diversity	N.E.C.(2017)	Load Type	Conn.	Fct.	Diversity
220.44	(R)Receptacle	12000 VA	91.67%	11000 VA	210.20(a)	(L)Lighting	7868 VA	125.00%	9835 VA
220.56	(K)Kitchen					(EL)Ext. Ltg.	1074 VA	125.00%	1343 VA
220.60	(C)Cooling			0 VA	620.14	(E)Elevators			
220.60	(H)Heating			0 VA		(WH)Wat. Htr.			
220.60	(F)Fans				220.5	(MT)Lrg. Motor	540 VA	116.67%	630 VA
	(M)Misc.	7400 VA	100.00%	7400 VA		(SP)Sub Pnl.			

Total Connected Load: 28882 VA VA = 80 A
Total Load (Diversified): 30208 VA VA = 84 A

Location of Panel: ELEC. 112

Panelboard L1B

22000 AIC Rating
X New
Existing

120/208 Wye Volt, 3 Phase, 4 Wire
1 Section
Type 1 -Nema Rating

Mains Type: MLO

0 A MCB
225 A BUS (Copper)
ISO. GRND. BUS

X Single
Double
Feed - Thru

Mounting
X Surface
Flush

Note	Load...	Type	Description	Wire	CB	CKT	CB	Wire	Description	Type	Load...	N...
	1080 VA	R	Receptacles: Dorms 1 & 2	12	20 A	1 2	20 A	12	Folding Bay Door Controller	M	500 VA	
	1080 VA	R	Receptacles: Dorms 3 & 4	12	20 A	3 4	20 A	12	Exhaust Fan EF-7 Controller	M	500 VA	
	1080 VA	R	Receptacles: Dorms 5 & 6	12	20 A	5 6	20 A	--	Spare	--	--	
	1080 VA	R	Receptacles: Dorms 7 & 8	12	20 A	7 8	20 A	12	Receptacles: Mezzanine	R	360 VA	
	480 VA	R	Receptacles/EF's: Dorm RR's	12	20 A	9 10	20 A	12	Receptacles: Utility 123	R	720 VA	
	720 VA	R	Receptacles/EF's: Dorm RR's	12	20 A	11 12	20 A	12	Washer: Utility 123	R	1200 VA	
	180 VA	R	Appliance Circuit #1	12	20 A	13 14	30 A	10	Dryer: Utility 123	M	4000 VA	
	360 VA	R	Appliance Circuit #2	12	20 A	15 16						
	360 VA	R	Receptacles: Kitchen 108	12	20 A	17 18	50 A	8	Electric Range	M	6000 VA	2
	360 VA	R	Receptacles: Kitchen Island	12	20 A	19 20						
	500 VA	M	Range Hood	12	20 A	21 22	20 A	12	Refrigerator: Pantry 1	R	1200 VA	2
	540 VA	M	Fire Suppression System	12	20 A	23 24	20 A	12	Freezer: Pantry 1	R	1200 VA	2
	540 VA	R	Receptacles: Day Room	12	20 A	25 26	20 A	12	Refrigerator: Pantry 2	R	1200 VA	2
	360 VA	R	TV: Day Room	12	20 A	27 28	20 A	12	Freezer: Pantry 2	R	1200 VA	2
	720 VA	R	Receptacles: Hallway 128	12	20 A	29 30	20 A	12	Refrigerator: Pantry 3	R	1200 VA	2
	2000 VA	M	IT Receptacle: IT 124	10	30 A	31 32	20 A	12	Freezer: Pantry 3	R	1200 VA	2
						33 34	24 A	12	Disposal	R	1200 VA	
	360 VA	R	IT Receptacle: IT 124	12	20 A	35 36	20 A	--	Spare	--	--	
	720 VA	R	Receptacles: IT 124	12	20 A	37 38	20 A	--	Spare	--	--	
2	1200 VA	M	Ice Machine: Utility 123	12	20 A	39 40	20 A	12	Cord Reel: Apparatus Bay	M	1500 VA	
	250 VA	MT	Circulation Pump: Utility 123	12	20 A	41 42	20 A	12	Cord Reel: Apparatus Bay	M	1500 VA	
	180 VA	R	Condensate Pump: IT 124	12	20 A	43 44	20 A	12	Cord Reel: Apparatus Bay	M	1500 VA	
	--	--	Spare	--	20 A	45 46	20 A	12	Cord Reel: Apparatus Bay	M	1500 VA	
	--	--	Spare	--	20 A	47 48	20 A	12	Cord Reel: Apparatus Bay	M	1500 VA	
	--	--	Spare	--	20 A	49 50	20 A	12	Cord Reel: Apparatus Bay	M	1500 VA	
	--	--	Spare	--	20 A	51 52	20 A	12	Cord Reel: Apparatus Bay	M	1500 VA	
	--	--	Spare	--	20 A	53 54	20 A	12	Cord Reel: Apparatus Bay	M	1500 VA	

N.E.C. (2017)	Load Type	Conn.	Fct.	Diversity	N.E.C.(2017)	Load Type	Conn.	Fct.	Diversity
220.44	(R)Receptacle	20340 VA	74.58%	15170 VA	210.20(a)	(L)Lighting			
220.56	(K)Kitchen					(EL)Ext. Ltg.			
220.60	(C)Cooling			0 VA	620.14	(E)Elevators			
220.60	(H)Heating			0 VA		(WH)Wat. Htr.			
220.60	(F)Fans				220.5	(MT)Lrg. Motor	250 VA	125.00%	313 VA
	(M)Misc.	27240 VA	100.00%	27240 VA		(SP)Sub Pnl.			

Total Connected Load: 47830 VA VA = 133 A
Total Load (Diversified): 42723 VA VA = 119 A

Location of Panel: ELEC. 112

Panelboard L1C

22000 AIC Rating
X New
Existing

120/208 Wye Volt, 3 Phase, 4 Wire
1 Section
Type 1 -Nema Rating

Mains Type: MLO

0 A MCB
225 A BUS (Copper)
ISO. GRND. BUS

X Single
Double
Feed - Thru

Mounting
X Surface
Flush

Note	Load...	Type	Description	Wire	CB	CKT	CB	Wire	Description	Type	Load...	N...
	700 VA	M	Security Gate/Card Reader	12	20 A	1 2	30 A	10	Generator Jacket Heater	H	4000 VA	
	--	--	Spare	--	20 A	3 4						
	696 VA	F	Exhaust Fan EF-2: Electrical 112	12	15 A	5 6	20 A	12	Generator Condensation Heater	M	1000 VA	
	120 VA	F	Exhaust Fan EF-4 & EF-6: Air...	12	20 A	7 8	20 A	12	Generator Battery Charger	M	1200 VA	
	360 VA	F	Exhaust Fan EF-3: Utility 123	12	20 A	9 10	20 A	--	Spare	--	--	
	60 VA	R	Exhaust Fan EF-1: Decon 132	12	15 A	11 12	20 A	--	Spare	--	--	
	80 VA	R	Exhaust Fan EF-3: Air Lock 136	12	20 A	13 14	20 A	--	Spare	--	--	
						15 16						
	3000 VA	MT	Folding Bay Door	12	15 A	17 18	15 A	12	Rolling Bay Door	MT	3000 VA	
						19 20						
	3000 VA	MT	Folding Bay Door	12	15 A	21 22 23 24 25 26	15 A	12	Rolling Bay Door	MT	3000 VA	
	3000 VA	MT	Folding Bay Door	12	15 A	27 28 29 30 31 32	15 A	12	Rolling Bay Door	MT	3000 VA	
	3000 VA	MT	Folding Bay Door	12	15 A	33 34 35 36 37 38	15 A	12	Rolling Bay Door	MT	3000 VA	
	900 VA	F	Garage Exhaust Fan GEF-2	12	15 A	39 40 41 42 43 44	25 A	10	Electric Unit Heater: EUH-1	H	3750 VA	
	900 VA	F	Garage Exhaust Fan GEF-1	12	15 A	45 46 47 48 49 50	25 A 20 A 20 A	10 --	Electric Unit Heater: EUH-2 Spare Spare	H -- --	3750 VA -- --	
	--	--	Spare	--	20 A	51 52	20 A	--	Spare	--	--	
	--	--	Spare	--	20 A	53 54	20 A	--	Spare	--	--	

N.E.C. (2017)	Load Type	Conn.	Fct.	Diversity	N.E.C.(2017)	Load Type	Conn.	Fct.	Diversity
220.44	(R)Receptacle	120 VA	100.00%	120 VA	210.20(a)	(L)Lighting			
220.56	(K)Kitchen					(EL)Ext. Ltg.			
220.60	(C)Cooling			0 VA	620.14	(E)Elevators			
220.60	(H)Heating	11500 VA	100.00%	11500 VA		(WH)Wat. Htr.			
220.60	(F)Fans	2976 VA	100.00%	2976 VA	220.5	(MT)Lrg. Motor	24000 VA	103.13%	24750 VA
	(M)Misc.	2900 VA	100.00%	2900 VA		(SP)Sub Pnl.			

Total Connected Load: 41496 VA VA = 115 A
Total Load (Diversified): 42246 VA VA = 117 A

Location of Panel: ELEC. 112

Panelboard L1D

22000 AIC Rating
X New
Existing

120/208 Wye Volt, 3 Phase, 4 Wire
1 Section
Type 1 -Nema Rating

Mains Type: MLO

0 A MCB
225 A BUS (Copper)
ISO. GRND. BUS

X Single
Double
Feed - Thru

Mounting
X Surface
Flush

Note	Load...	Type	Description	Wire	CB	CKT	CB	Wire	Description	Type	Load...	N...
	180 VA	C	VRV Branch Selector Box	12	15 A	1 2 3 4	60 A	6	ALT 1: Fuel Station Load Center	SP	8736 VA	
	720 VA	C	VRF CC's Units 1-8	12	20 A	5 6 7 8	50 A	8	Wash Bay Pressure Washer	MT	9114 VA	
	360 VA	H	Infrared Heater IRH-1	12	20 A	9 10						
	360 VA	H	Infrared Heater IRH-2	12	20 A	11 12	20 A	12	Wash Bay Water Softener	R	800 VA	
	360 VA	H	Infrared Heater IRH-3	12	20 A	13 14						
	360 VA	H	Infrared Heater IRH-4	12	20 A	15 16	20 A	12	Wash Bay Air Compressor	MT	3963 VA	
	360 VA	H	Infrared Heater IRH-5	12	20 A	17 18						
	360 VA	H	Infrared Heater IRH-6	12	20 A	19 20	20 A	12	Wash Bay Canopy Lighting	L	279 VA	
	--	--	Space	--	--	21 22	20 A	12	Wash Bay Lighting	L	1410 VA	
	1975 VA	C	Mini-Split DS/DSCU-1	12	15 A	23 24 25 26 27 28	30 A 20 A	10 12	Wash Bay Vaccuum Wash Bay Sump Pump	MT MT	2200 VA 0 VA	
	7700 VA	C	Condensing Unit VRF-CU-1	8	45 A	29 30 31 32 33 34	25 A	10	Condensing Unit ACCU-1	C	4377 VA	
	6000 VA	H	Fan/Coil: FCU-1	10	30 A	35 36 37 38 39 40	25 A	10	Condensing Unit ACCU-2	C	4377 VA	
	6000 VA	H	Fan/Coil: FCU-2	10	30 A	41 42 43 44 45 46	20 A 25 A	12 10	Condensing Unit ACCU-3 Condensing Unit ACCU-4	C C	2580 VA 4377 VA	
	3000 VA	H	Fan/Coil: FCU-3	10	25 A	47 48 49 50						
	6000 VA	H	Fan/Coil: FCU-4	10	30 A	51 52 53 54 55 56	25 A 20 A	10 --	Condensing Unit ACCU-5 Spare	C --	4377 VA --	
	6000 VA	H	Fan/Coil: FCU-5	10	30 A	57 58 59 60 61 62	20 A 20 A 20 A	-- -- --	Spare Spare Spare	-- -- --	-- -- --	
	--	--	Spare	--	20 A	63 64	20 A	--	Spare	--	--	
	--	--	Spare	--	20 A	65 66	20 A	--	Spare	--	--	

N.E.C. (2017)	Load Type	Conn.	Fct.	Diversity	N.E.C.(2017)	Load Type	Conn.	Fct.	Diversity
220.44	(R)Receptacle	800 VA	100.00%	800 VA	210.20(a)	(L)Lighting	1689 VA	125.00%	2111 VA
220.56	(K)Kitchen					(EL)Ext. Ltg.			
220.60	(C)Cooling	30663 VA	100.00%	30663 VA	620.14	(E)Elevators			
220.60	(H)Heating	29160 VA	100.00%	0 VA		(WH)Wat. Htr.			
220.60	(F)Fans				220.5	(MT)Lrg. Motor	15277 VA	114.91%	17556 VA
	(M)Misc.					(SP)Sub Pnl.	8736 VA	100.00%	8736 VA

Total Connected Load: 86325 VA VA = 240 A
Total Load (Diversified): 59866 VA VA = 166 A

Location of Panel: ELEC. 112

PANEL SCHEDULE NOTES

1. PROVIDE HANDLE TIE FOR FIRE ALARM CONTROL PANEL.
2. PROVIDE GFI CIRCUIT BREAKER FOR APPLIANCE CIRCUIT.

DBR
9601 McAllister Freeway, Suite 410
San Antonio, Texas 78216
210.546.0200 v 210.546.0201 f
TBPE Firm Registration No. 2234

DBR Project Number 196024.000

JC	BV	DA	WJ	JC

PROFESSIONAL SEAL

STATE OF TEXAS
M. JACQUELINE CHANG
124987
LICENSED
PROFESSIONAL ENGINEER
02/20/2020

martinez ARCHITECTS
Martinez Architect, LP
900 Rockmead, Suite 250
Houston, Texas 77339
281.346.7371

DESIGN TEAM

Architectural
Martinez Architects

Civil Engineer
Maverick Engineering

Structural
Matrix Structural engineers

MEP/FP
DBR

Landscape Architect
KDC Associates

Consultant 5 Discipline Type
Consultant 5 Name

FIRE STATION #11
CITY OF MIDLAND
6600 BRIARWOOD AVE
MIDLAND, TX 79707

PROJECT No: **MA 18017**
DATE: **16-JAN-2020**

No.	Date	Description
1	01/30/2020	100% CD
2	02/20/2020	Addendum 02

ELECTRICAL SCHEDULES

E502

4.1794

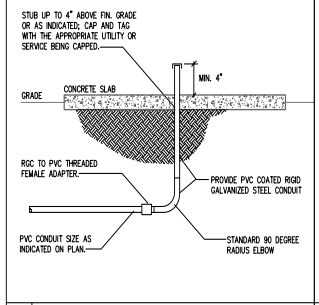

1 CONDUIT STUB UP AND CAP DETAIL
NOT TO SCALE

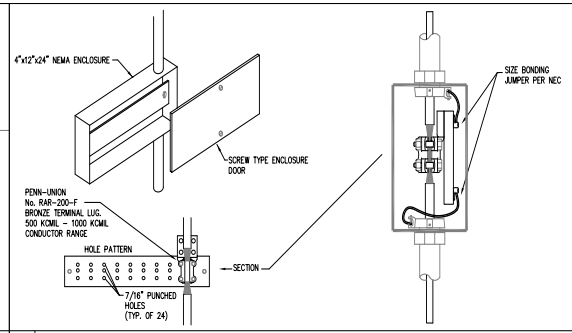

2 TYPICAL GROUNDING BUS DETAIL
NOT TO SCALE

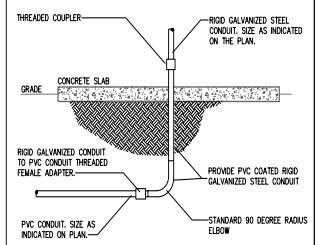

3 CONDUIT STUB UP DETAIL
NOT TO SCALE

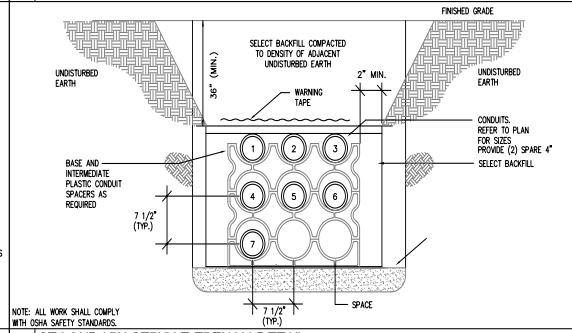

4 SECONDARY SERVICE TRENCH DETAIL
NOT TO SCALE

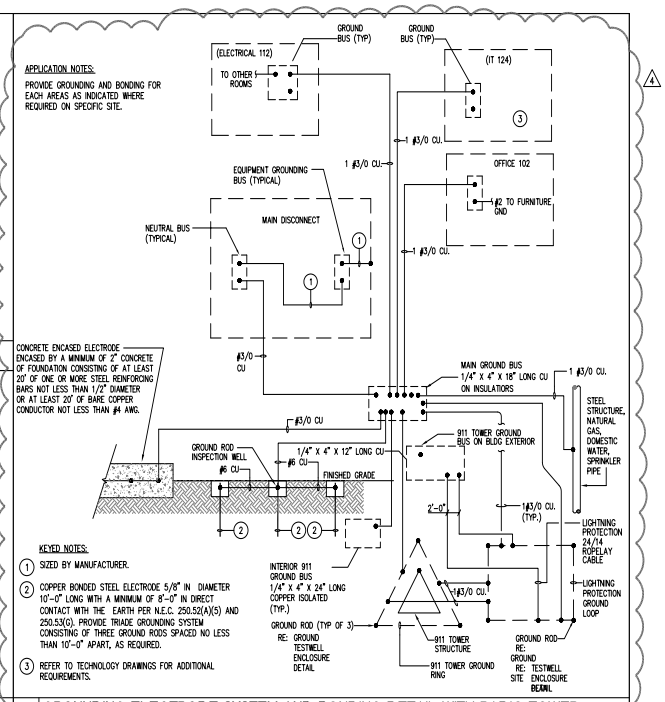

5 GROUNDING ELECTRODE SYSTEM AND BONDING DETAIL WITH RADIO TOWER
NOT TO SCALE

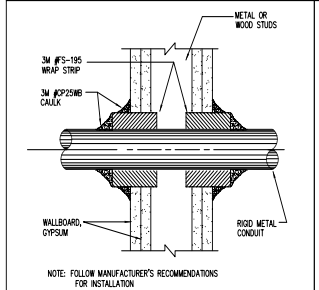

6 1 AND 2 HR. GYPSUM/WALLBOARD PIPE PENETRATION
NOT TO SCALE

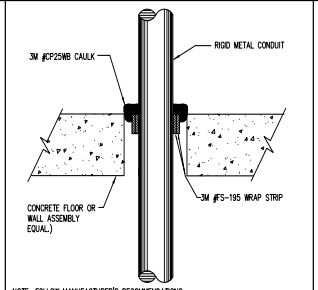

7 2, 3 AND 4 HR. PENETRATIONS FOR CONCRETE FLOOR AND WALL
NOT TO SCALE

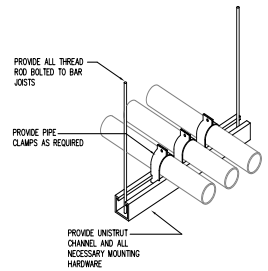

8 UNISTRUT CONDUIT DETAIL
NOT TO SCALE

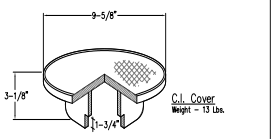

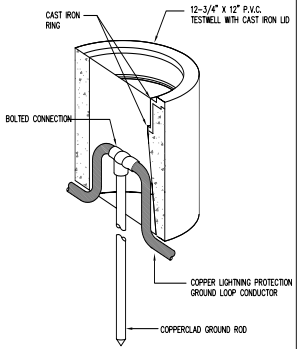

12 GROUND TESTWELL ENCLOSURE
NOT TO SCALE (FOR ALL GROUND RODS)

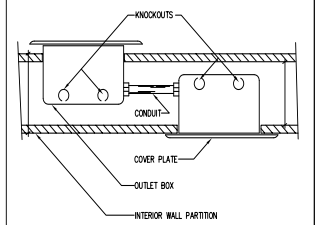

9 BACK-TO-BACK OUTLETS
NOT TO SCALE

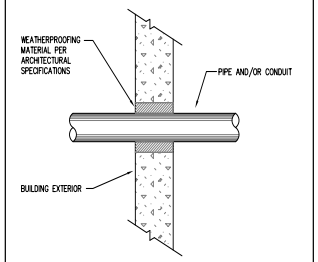

10 PIPE AND/OR CONDUIT PENETRATION
NOT TO SCALE

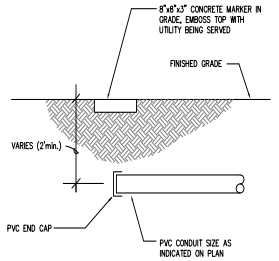

11 CAP AND STAKE DETAIL
NOT TO SCALE

DBR
9601 McAllister Freeway, Suite 410
San Antonio, Texas 78216
210.546.0200 v 210.546.0201 f
TBPE Firm Registration NO. 2234

DBR Project Number 196024.000

JC	BV	DA	WJ	JC

PROFESSIONAL SEAL

STATE OF TEXAS
M. JACQUELINE CHANG
124987
LICENSED
PROFESSIONAL ENGINEER
01/30/2020

martinez ARCHITECTS
Martinez Architect, LP
900 Rockmead, Suite 250
Houston, Texas 77339
281.346.7371

DESIGN TEAM

Architectural
Martinez Architects

Civil Engineer
Maverick Engineering

Structural
Matrix Structural Engineers

M/E/P/T
DBR

Landscape Architect
KDC Associates

FIRE STATION #11

CITY OF MIDLAND
6600 BRIARWOOD AVE
MIDLAND, TX 79707

PROJECT No: MA 18017
DATE: 01/30/2020

No.	Date	Descrption
	01/30/2020	100% CD
4	02/26/2020	Addendum 04

ELECTRICAL DETAILS

E601

4.1795

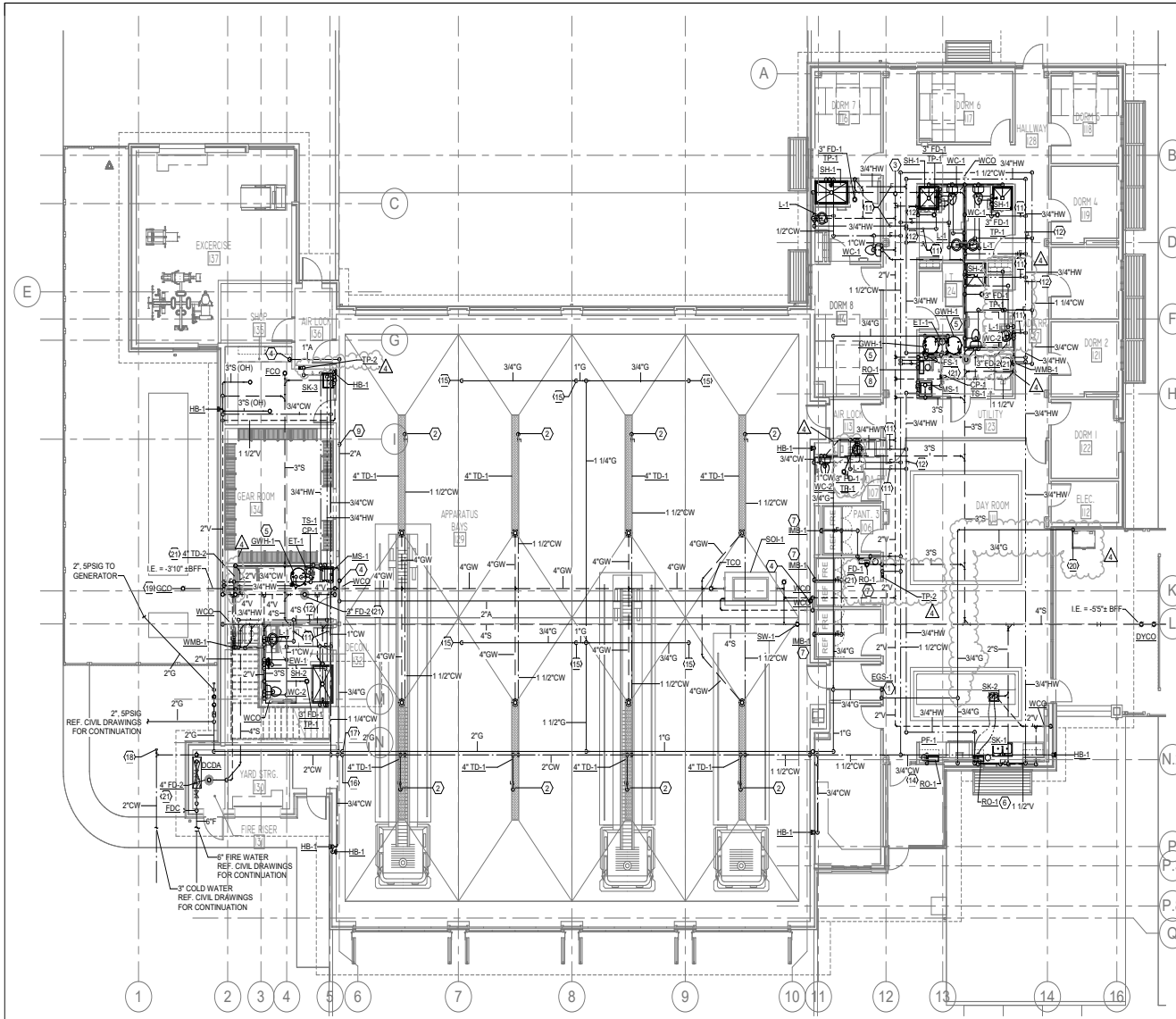

1 LEVEL 1 PLUMBING PLAN
P201 1/8" = 1'-0"

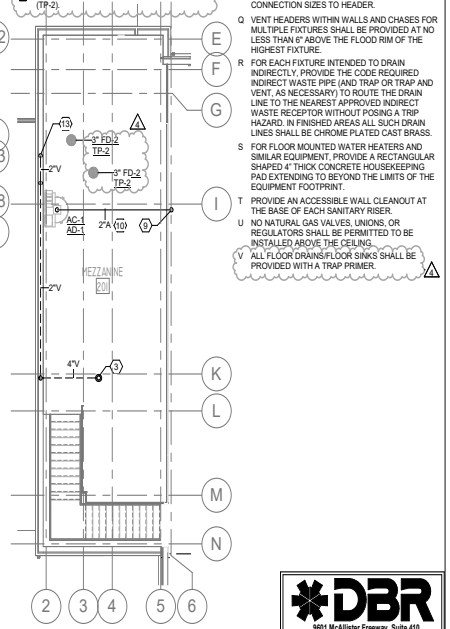

2 MEZZANINE PLUMBING PLAN
P201 1/8" = 1'-0"

PLUMBING KEYED NOTES

1. EMERGENCY GAS SHUT-OFF (EGS-1). COORDINATE WITH ELECTRICAL. RE: 9/P601.
2. 1-1/2" WATER FILL FROM OVER HEAD. VALVE AND CAP DROP FOR OWNER INSTALLED EQUIPMENT. VERIFY EXACT LOCATION AND HEIGHT WITH OWNER.
3. 3" VENT UP TO VTR.
4. 1" COMPRESSED AIR DROP. SECURE VERTICAL PIPE TO WALL VALVE AND CAP FOR OWNER INSTALLED EQUIPMENT. VERIFY EXACT LOCATION AND HEIGHT WITH OWNER.
5. 3" DIRECT VENT FROM GAS WATER HEATER (GWH-1). COORDINATE WITH MECHANICAL.
6. RO SYSTEM AND STORAGE TANK (RO-1). ROUTE FILTERED COLD WATER TO FIXTURES (SK-1 AND SK-2).
7. ROUTE FILTERED WATER FROM REVERSE OSMOSIS SYSTEM (RO-1) TO WALL BOXES (IMB-1) SERVING PANTRY REFRIGERATORS.
8. RO SYSTEM AND STORAGE TANK (RO-1). ROUTE FILTERED WATER TO ICE MACHINE.
9. 2" AIR DOWN FROM MEZZANINE.
10. ROUTE PIPE AS HIGH OVERHEAD AS POSSIBLE.
11. VALVE NORMALLY OPEN.
12. VALVE NORMALLY CLOSED.
13. VENT UP FROM BELOW.
14. RO SYSTEM AND STORAGE TANK (RO-1). ROUTE FILTERED WATER TO FIXTURE (PF-1).
15. 3/4" GAS TO INFRA-RED RADIANT HEATER. COORDINATE WITH MECHANICAL.
16. 2" COLD WATER UP; ROUTE AS HIGH AS POSSIBLE IN APPARATUS BAYS.
17. 2" GAS UP; ROUTE AS HIGH AS POSSIBLE IN APPARATUS BAYS.
18. 1-1/2" COLD WATER STUB OUT CAPPED FOR FUTURE. PROVIDE ACCESS BOX WITH VALVE. COORDINATE EXACT LOCATION WITH OWNER/ARCHITECT.
19. PROVIDE 4" SAND/OIL STUB UP TO GCO FOR CONNECTION TO WASTE LINE FROM WASH BAY (ALTERNATE #2).
20. ROUTE 3/4" GAS THROUGH WALL ABOVE PATIO CEILING AND DROP TO PATIO BBQ GRILL(S). SLEEVE AT PENETRATION. REF: 14/P601. ROUTE PIPE TIGHT TO WALL. PROVIDE VALVE AND CAP AT DROP.
21. CONNECT DRAIN TO ELECTRONIC TRAP PRIMER (TP-2).

GENERAL PLUMBING...

A. ALL WORK, METHODS AND INSTALLATIONS INVOLVED IN THE PLUMBING DESIGN SHALL BE IN ACCORDANCE WITH THE PREVAILING BUILDING CODES AND INSPECTION REGULATIONS AND ALL OTHER OFFICIALS HAVING JURISDICTION.

B. PRIOR TO CONSTRUCTION, THE CONTRACTOR IS RESPONSIBLE FOR OBTAINING A COPY OF THE OWNER'S MOST RECENT STANDARDS AND REQUIREMENTS FOR CONSTRUCTION. ALL WORK SHALL BE PERFORMED IN ACCORDANCE WITH SUCH REQUIREMENTS, UNLESS THE PREVAILING CODE OR THESE DOCUMENTS INDICATE A HIGHER STANDARD, WHICH SHALL GOVERN.

C. COORDINATE ROUTING OF PIPING IN CEILING SPACES WITH MECHANICAL AND ELECTRICAL EQUIPMENT, DUCTWORK AND CONDUIT. NOTIFY THE ARCHITECT/ENGINEER OF ANY CONFLICTS PRIOR TO INSTALLING AN ALTERNATE PIPING PLAN.

D. DO NOT ROUGH-IN FOR FIXTURES FROM THESE DRAWINGS. REFER TO LATEST ARCHITECTURAL DRAWINGS FOR DIMENSIONED LOCATIONS.

E. ALL PLUMBING FIXTURE AND DEVICE LOCATIONS AND MOUNTING HEIGHTS SHALL BE COORDINATED IN ADVANCE WITH CASEWORK, MILLWORK, ETC.

F. COORDINATE FIXTURE AND EQUIPMENT LOCATIONS AND CONNECTION REQUIREMENTS WITH LATEST ARCHITECTURAL DRAWINGS, SPECIFICATIONS, AND MANUFACTURER RECOMMENDATIONS PRIOR TO ANY ROUGH-INS.

G. PROVIDE CLEANOUTS, POINT OF USE WATER HEATERS, WATER FILTERS, ETC. IN ACCESSIBLE, BUT NOT IMMEDIATELY VISIBLE LOCATIONS. REFER TO AND COORDINATE WITH ARCHITECTURAL DRAWINGS FOR DIMENSIONS AND DETAILS OF SINK SKIRTS, ADA PANELS, AND MILLWORK.

H. ALL PIPING SHALL BE ROUTED CONCEALED FROM PUBLIC VIEW.

J. ENSURE THAT PIPING ROUTED IN CEILING SPACE IS AT AN ELEVATION ABOVE THE TOP OF WINDOW FRAME HEADS. ENSURE THAT PIPING ROUTED LOW INSIDE WALLS IS BELOW THE ELEVATION OF WINDOW SILLS. PROVIDE OFFSETS IN PIPING AS REQUIRED.

K. ALL VALVES, EQUIPMENT, AND OPERABLE APPURTENANCES SHALL BE LOCATED FREE FROM OBSTRUCTIONS FOR FULL OPERABILITY AND MAINTENANCE ACCESS.

L. ALL PIPING PROVIDED WITHIN RETURN AIR CEILING SPACES SHALL BE PLENUM RATED.

M. INSTALLATIONS WHICH DO NOT ADHERE TO THE REQUIREMENTS INDICATED WITHIN THE CONTRACT DOCUMENTS OR WHICH ARE INCORRECT DUE TO LACK OF FIELD COORDINATION, ETC. SHALL BE CORRECTED SOLELY AT THE CONTRACTOR'S EXPENSE, WITH NO EXCEPTIONS.

N. PROVIDE BALL VALVE SHUT-OFFS ON ALL DOMESTIC WATER BRANCH LINES WITHIN 24" OF THE CORRESPONDING MAIN.

P. ALL DOMESTIC WATER AND SANITARY VENT LINES SERVING FIXTURE GROUPS SHALL HAVE A FULL SIZE HEADER THAT RUNS THE LENGTH OF THE CHASE/WALL SPACE FOR CONNECTION TO ALL FIXTURES. REFER TO PLANS FOR HEADER SIZES, WHICH MAY BE INDICATED BY THE VERTICAL DROP DOWN OR RISE UP FROM THE CHASE. REFER TO PLUMBING FIXTURE SCHEDULE FOR INDIVIDUAL FIXTURE ROUGH-IN CONNECTION SIZES TO HEADER.

Q. VENT HEADERS WITHIN WALLS AND CHASES FOR MULTIPLE FIXTURES SHALL BE PROVIDED AT NO LESS THAN 6" ABOVE THE FLOOD RIM OF THE HIGHEST FIXTURE.

R. FOR EACH FIXTURE INTENDED TO DRAIN INDIRECTLY, PROVIDE THE CODE REQUIRED INDIRECT WASTE PIPE (AND TRAP OR TRAP AND VENT, AS NECESSARY) TO ROUTE THE DRAIN LINE TO THE NEAREST APPROVED INDIRECT WASTE RECEPTOR WITHOUT POSING A TRIP HAZARD. IN FINISHED AREAS ALL SUCH DRAIN LINES SHALL BE CHROME PLATED CAST BRASS.

S. FOR FLOOR MOUNTED WATER HEATERS AND SIMILAR EQUIPMENT, PROVIDE A RECTANGULAR SHAPED 4" THICK CONCRETE HOUSEKEEPING PAD EXTENDING TO BEYOND THE LIMITS OF THE EQUIPMENT FOOTPRINT.

T. PROVIDE AN ACCESSIBLE WALL CLEANOUT AT THE BASE OF EACH SANITARY RISER.

U. NO NATURAL GAS VALVES, UNIONS, OR REGULATORS SHALL BE PERMITTED TO BE INSTALLED ABOVE THE CEILING.

V. ALL FLOOR DRAINS/FLOOR SINKS SHALL BE PROVIDED WITH A TRAP PRIMER.

TRUE NORTH | PROJECT NORTH

DBR
9601 McAllister Freeway, Suite 410
San Antonio, Texas 78216
210.546.0200 v 210.546.0201 f
TBPE Firm Registration No. 2234

DBR Project Number 196024.000

JC | BV | DA | WJ | JC

PROFESSIONAL SEAL

STATE OF TEXAS
M. JACQUELINE CHANG
124987
LICENSED
PROFESSIONAL ENGINEER
01/30/2020

martinez ARCHITECTS
Martinez Architect, LP
900 Rockmead, Suite 250
Houston, Texas 77339
281.346.7371

DESIGN TEAM

Architectural
Martinez Architects

Civil Engineer
Maverick Engineering

Structural
Matrix Structural engineers

MEP/FP/T
DBR

Landscape Architect
KDC Associates

FIRE STATION #11

CITY OF MIDLAND
6600 BRIARWOOD AVE
MIDLAND, TX 79707

PROJECT No: MA 18017
DATE: 01/30/2020

No.	Date	Description
	01/30/2020	100% CD
4	02/26/2020	Addendum 04

LEVEL 1 & MEZZANINE PLUMBING PLAN

P201

4.1796

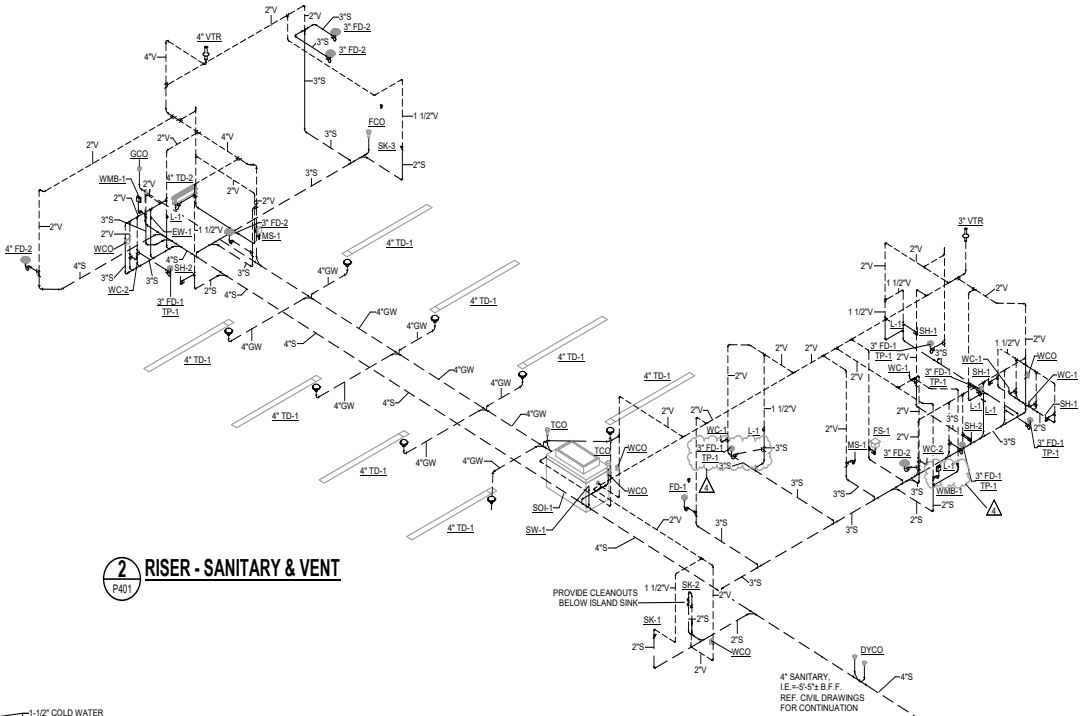

2 P401 RISER - SANITARY & VENT

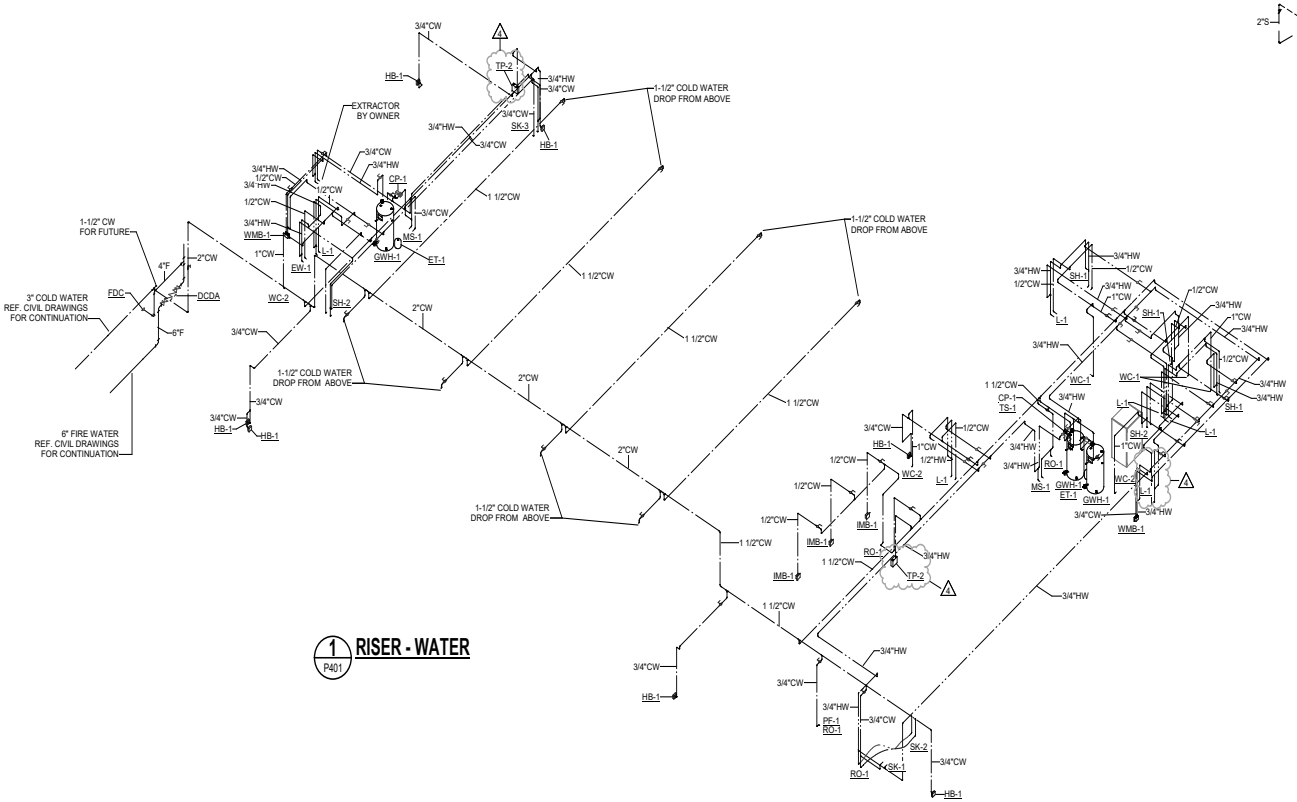

1 P401 RISER - WATER

DBR
9601 McAllister Freeway, Suite 410
San Antonio, Texas 78216
210.546.0200 v 210.546.0201 f
TBPE Firm Registration No. 2234

DBR Project Number 196024.000

JC	BV	DA	WJ	JC

PROFESSIONAL SEAL

STATE OF TEXAS
M. JACQUELINE CHANG
124987
LICENSED
PROFESSIONAL ENGINEER
02/26/2020

martinez ARCHITECTS
Martinez Architect, LP
900 Rockmead, Suite 250
Houston, Texas 77339
281.346.7371

DESIGN TEAM

Architectural
Martinez Architects

Civil Engineer
Maverick Engineering

Structural
Matrix Structural engineers

M/E/P/T
DBR

Landscape Architect
KDC Associates

FIRE STATION #11

CITY OF MIDLAND
6600 BRIARWOOD AVE
MIDLAND, TX 79707

PROJECT No: **MA 18017**
DATE: **01/30/2020**

No.	Date	Description
	01/30/2020	100% CD
4	02/26/2020	Addendum 04

PLUMBING RISER DIAGRAMS

P401

4.1797

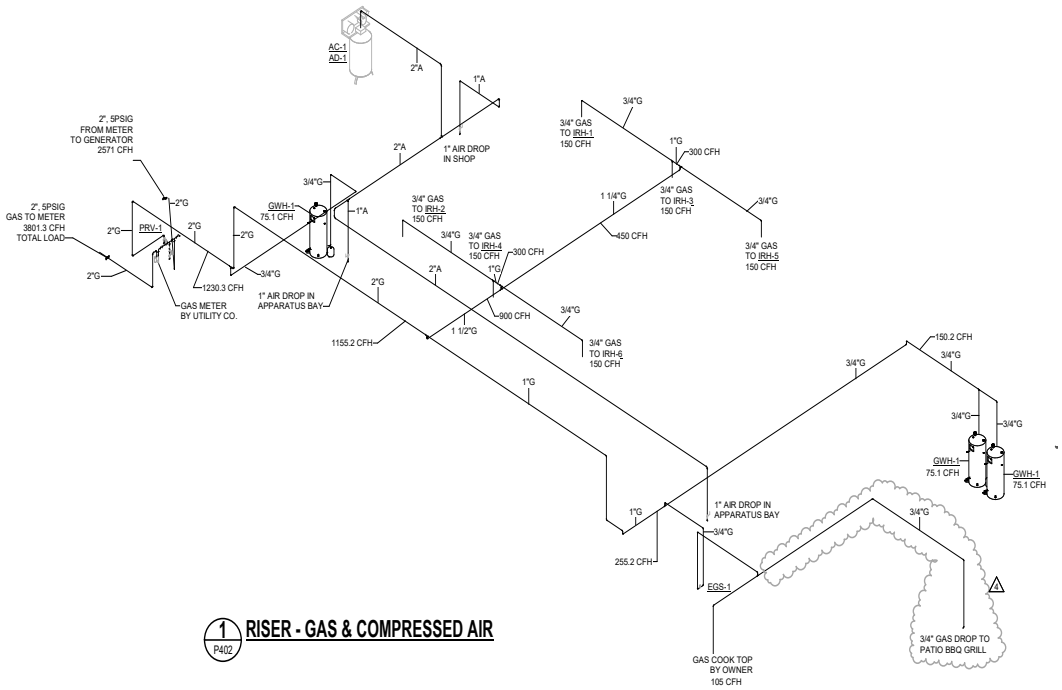

1 P402 **RISER - GAS & COMPRESSED AIR**

DBR
9601 McAllister Freeway, Suite 410
San Antonio, Texas 78216
210.546.0200 v 210.546.0201 f
TBPE Firm Registration No. 2234

DBR Project Number 196024.000

JC	BV	DA	WJ	JC

PROFESSIONAL SEAL

STATE OF TEXAS
M. JACQUELINE CHANG
124987
LICENSED
PROFESSIONAL ENGINEER
02/26/2020

martinez ARCHITECTS
Martinez Architect, LP
900 Rockmead, Suite 250
Houston, Texas 77339
281.346.7371

DESIGN TEAM

Architectural
Martinez Architects

Civil Engineer
Maverick Engineering

Structural
Matrix Structural engineers

M/E/P/T
DBR

Landscape Architect
KDC Associates

FIRE STATION #11

CITY OF MIDLAND
6600 BRIARWOOD AVE
MIDLAND, TX 79707

PROJECT No: **MA 18017**
DATE: **01/30/2020**

No.	Date	Description
	01/30/2020	100% CD
4	02/26/2020	Addendum 04

PLUMBING RISER DIAGRAMS

P402

4.1798

PLUMBING GENERAL NOTES

1. CONTRACTOR SHALL COMPLY WITH ALL LOCAL, STATE, AND FEDERAL CODES AND AUTHORITIES HAVING JURISDICTION AND SHALL MAKE ALL FINAL CONNECTIONS TO FIXTURES AND EQUIPMENT.
2. DO NOT SCALE PLUMBING DRAWINGS. REFER TO DIMENSIONED ARCHITECTURAL OR EQUIPMENT DRAWINGS FOR EXACT LOCATIONS OF FIXTURES OR EQUIPMENT WITH CONNECTIONS.
3. CONTRACTOR SHALL FIELD VERIFY EXACT LOCATIONS AND ELEVATIONS FOR EXISTING POINTS OF CONNECTION WITH ALL SANITARY, STORM DRAINAGE OR OTHER UTILITY PIPING PRIOR TO THE INSTALLATION OF ANY PIPING. THE CONTRACTOR SHALL BE RESPONSIBLE TO ALERT THE ARCHITECT OF GRADING PROBLEMS PRIOR TO COMMENCING WORK WHEN SUCH PROBLEMS EXIST.
4. ALL PIPE PASSING THROUGH FLOORS OR WALLS WHICH ARE FIRE RATED SHALL BE SUPPORTED AT PENETRATION AND SHALL BE SEALED WITH APPROVED FIRE STOP MATERIALS AS REQUIRED BY BUILDING CODES.
5. CONTRACTOR SHALL COORDINATE WITH STRUCTURAL CONDITIONS AT THE SITE AND PROVIDE PROPER ROUGH-IN CONNECTIONS AS REQUIRED WITHOUT DAMAGE TO STRUCTURE. WHERE MODIFICATIONS TO STRUCTURAL MEMBERS ARE REQUIRED THE CONTRACTOR SHALL RECEIVE WRITTEN APPROVAL FROM THE ARCHITECT AND STRUCTURAL ENGINEER PRIOR TO MODIFICATIONS.
6. CONTRACTOR SHALL BE RESPONSIBLE FOR FIELD COORDINATING ALL PLUMBING PIPING AND SLEEVE LOCATIONS WITH ALL OTHER TRADES PRIOR TO INSTALLATION OF ANY PIPING OR SUPPORTS.

FIRE PROTECTION GENERAL NOTES:

1. FIRE SPRINKLER CONTRACTOR TO FIELD VERIFY SPRINKLER HEAD LOCATIONS.
2. SPRINKLER SYSTEM SHALL BE DESIGNED AND INSTALLED BY A STATE LICENSED FIRE PROTECTION CONTRACTOR IN ACCORDANCE WITH ALL LOCAL, STATE, JURISDICTIONAL, GOVERNMENTAL AGENCIES, MIDLAND COUNTY FIRE CODE, AND NFPA 13 (LATEST ADDITION). SPRINKLER SYSTEM MUST ALSO BE APPROVED BY LANDLORD AND LANDLORD'S FIRE INSURANCE UNDERWRITER.
3. SHOP DRAWINGS AND CALCULATIONS SHALL BE SUBMITTED BY THE CONTRACTOR FOR OWNER, LANDLORD, LANDLORD'S FIRE INSURANCE UNDERWRITER, AND FIRE MARSHALL'S APPROVAL.
4. SPRINKLER SYSTEM SHALL CONTAIN NO VALVES DOWNSTREAM OF CONTROL STATION.
5. CONTRACTOR TO DESIGN SPRINKLER SYSTEM AS REQUIRED TO ACCOMMODATE FIXTURES, PARTITIONS, SOFFITS, FURR DOWNS, CEILING HEIGHTS, ETC.
6. FIRE SPRINKLER SYSTEM SHALL PROVIDE COMPLETE AUTOMATIC PROTECTION AND COVERAGE REQUIRED BY THE LOCAL, STATE, JURISDICTIONAL, GOVERNMENTAL AGENCIES, NFPA 13 (LATEST ADDITION), AND THE MIDLAND COUNTY FIRE CODE. THE WORK SHALL INCLUDE BUT NOT BE LIMITED TO VALVE SUPERVISORY SWITCHES, FLOW SWITCHES AND COORDINATION WITH THE LANDLORDS FIRE ALARM SYSTEM.
7. THE SCOPE OF WORK INCLUDES THE INSTALLATION OF SPRINKLER HEADS INCLUDING PIPE, FITTINGS, HANGERS, AND ACCESSORIES. CONTRACTOR SHALL COORDINATE WITH ARCHITECT THE NEW LOCATIONS OF THE SPRINKLER HEADS PRIOR TO INSTALLATION.
8. THE SPRINKLER SYSTEM SHALL BE FULLY CHARGED AND OPERATIONAL WHEN THE CONTRACTOR IS OFF THE SITE.
9. REFER TO LANDLORD'S CRITERIA FOR ADDITIONAL INFORMATION.
10. SPRINKLER HEADS SHALL BE CONCEALED QUICK RESPONSE WITH WHITE ESCUTCHEONS.

PLUMBING FIXTURES GENERAL NOTES

1. CONTRACTOR TO FIELD VERIFY ELEVATIONS AND DIMENSIONS OF FINISHED FLOORS AND WALLS. TRUE ALL DRAINS, ROUGH-INS AND CARRIERS IN ACCORDANCE WITH WITH PROPOSED ELEVATIONS AND FINISHED SURFACES.
2. MOUNTING HEIGHT ELEVATION OF ALL WALL HUNG OR COUNTER MOUNTED FIXTURES SHALL BE COORDINATED WITH THE ARCHITECT PRIOR TO INSTALLATION OF ROUGH-IN WORK.
3. FOR ALL FIXTURES AND EQUIPMENT WITH ASSOCIATED TRIM OR COMPONENT ACCESSORIES PROVIDED UNDER SEPARATE DIVISIONS AND REQUIRING PLUMBING CONNECTIONS; THIS CONTRACTOR SHALL FIELD COORDINATE EXACT REQUIREMENTS OF, MAKE PROVISIONS FOR, AND SUPPLY ALL MATERIALS AND LABOR FOR MAKING FINAL CONNECTIONS.
4. CONTRACTOR SHALL REFER TO SHOP DRAWINGS OF EQUIPMENT TO BE SUPPLIED FOR FINAL COORDINATION OF ALL ROUGH-IN OPENINGS BEFORE BEGINNING WORK.
5. ALL FIXTURE AND EQUIPMENT STUB-OUTS SHALL BE PROVIDED WITH A STOP VALVE. ALL FIXTURE STOPS SHALL BE SOLID BRASS, LOOSE KEY OPERATED, CHROME PLATED (WHERE EXPOSED), AND FITTED TIGHT TO CHROME PLATED BRASS WALL ESCUTCHEON PLATES.
6. ALL ROUGH IN OPENINGS SHALL BE FITTED WITH CHROME PLATED, HEAVY GAGE BRASS ESCUTCHEON PLATES FITTED TIGHT TO THE PIPE.
7. ALL EXPOSED BRASS SHALL BE CHROME PLATED.
8. PROVIDE DEEP SEAL P-TRAP FOR ALL DRAINS.
9. ALL HANDICAPPED ACCESSIBLE FIXTURES INDICATED WITH ♿ SHALL BE PROVIDED OF APPROVED TYPES AND WITH REQUIRED CONTROLS AND INSTALLED TO HEIGHTS AND CLEARANCES, AS PRESCRIBED BY AMERICAN WITH DISABILITIES ACT (ADA). FIXTURES SHALL COMPLY WITH ALL FEDERAL, STATE, AND LOCAL ADA CODE REQUIREMENTS. REFER TO ARCHITECTURAL DRAWINGS FOR ALL DIMENSIONED ADA MOUNTING HEIGHTS AND SPECIFIED CLEARANCES.

GAS LOAD BREAKDOWN

ITEM	BTU	CFH @ 1000 BTU/CF
WATER HEATERS-3 @ 75,100 Ea.	225,300	225.3
RANGE COOK TOP	105,000	105.0
INFRARED RADIANT HEATER (IRH-1)	150,000	150.0
INFRARED RADIANT HEATER (IRH-2)	150,000	150.0
INFRARED RADIANT HEATER (IRH-3)	150,000	150.0
INFRARED RADIANT HEATER (IRH-4)	150,000	150.0
INFRARED RADIANT HEATER (IRH-5)	150,000	150.0
INFRARED RADIANT HEATER (IRH-6)	150,000	150.0
TOTAL LOW PRESSURE LOAD	1,230,300	1,230.3
TOTAL DEVELOPED LENGTH = 250 FT.	SIZING BASED ON TABLE 402.4(3) OF THE IFGC 2015.	
EMERGENCY GENERATOR @ 5PSI FROM MANIFOLD AT METER	2,571,000	2,571.0
ALTERNATE #2 GAS LOAD FOR WASH BAY @ 5PSI FROM MANIFOLD AT METER	440,000	440.0
TOTAL SITE GAS LOAD	4,241,300	4,241.0

GAS METERING AND PRESSURE REGULATING EQUIPMENT SCHEDULE

EQUIPMENT ITEM	PLAN MARK	GAS QUANTITY C.F.H.	PRESSURE INLET	PRESSURE OUTLET	DISTANCE REGULATOR TO LAST OUTLET	LOCATION	REF: DWG.	SERVICE
GAS METER 1	* * *	3,801.3	5 PSIG	5 PSIG	* * *	SERVICE YARD	MEP101	EMERGENCY GENERATOR AND BUILDING
MAIN REGULATOR 1	PRV-1	1,230.3	5 PSIG	11"-14" W.C.	210 FT.	SERVICE YARD	P402	BUILDING
MAIN REGULATOR 2	PRV-2	440.0	5 PSIG	11"-14" W.C.	100 FT.	SERVICE YARD	P402	WASH BAY (ALTERNATE #2)

GENERAL NOTES - GAS PIPING AND REGULATORS

1 GAS REGULATORS SHALL BE EQUIPPED WITH SCREENED VENT OPENINGS ORIENTED TO PREVENT THE ENTRANCE OF WATER OR OTHER FOULING MATERIALS. WHEN LOCATED INSIDE THE BUILDING VENTS SHALL BE PIPED TO THE BUILDING EXTERIOR AND TERMINATED WITH A SCREENED OUTLET 90 ELL FITTING POINTED DOWNWARD. PROVIDE LINE SIZE PLUG OR BALL VALVE AND UNION ON INLET; AND TEE WITH TEST COCK DOWNSTREAM OF ALL REGULATOR ASSEMBLIES.

2 ALL GAS PIPE BELOW GRADE AND BELOW CONCRETE SLAB ABUTTING THE BUILDING BASE SLAB SHALL BE RUN IN A CONTINUOUS SLEEVE. SLEEVES SHALL BE OPEN AT EACH END. BURIED END WITH GOOSENECK A MINIMUM OF 5'-0" BEYOND THE EDGE OF THE CONCRETE SLAB, ABOVE GRADE END, BELOW THE POINT OF ENTRY TO THE BUILDING OR ADJACENT TO REGULATORS OR ISOLATING VALVES.

3 GAS SLEEVES SHALL BE SCHEDULE 40 PVC BELOW GRADE AND WELDED SCHEDULE 40 STEEL ABOVE GRADE.

4 SLEEVES VENTED ABOVE GRADE SHALL BE GOOSENECK ASSEMBLIES WITH SCREENED INLETS AND SHALL BE SECURED IN A VANDAL PROOF MANNER.

SUMP PUMP SCHEDULE (ALTERNATE #2)

MARK	SERVICE	GPM	TOTAL HEAD FT	MOTOR HP	ELECTRICAL VOLTS	PHASE	HERTZ	DISCHARGE SIZE	BASIS OF DESIGN
SP-1	WASH BAY SUMP PIT	50	15	1/2	115	1	60	2"	STANCOR MODEL SE-50 WITH STANCOR CONTROL PANEL AND ALARM.

PLUMBING FIXTURE SCHEDULE

PLAN MARK	MINIMUM ROUGH-IN SIZES WST&VENT	DRAIN	CW	HW	DESCRIPTION
WATER CLOSET WC-1	4" 2"	4"	1"	---	AMERICAN STANDARD No. 3451 WHITE V.C. ELONGATED SIPHON JET FLOOR MOUNT (1.28 GPF) BOWL WITH TOP SPUD, CENTOCO 500STSCC WHITE OPEN FRONT SEAT AND SLOAN ROYAL FLUSH VALVE No. 111-1.28. REFER TO ARCHITECTURAL DWGS. FOR MOUNTING HEIGHT.
WATER CLOSET WC-2 ♿	4" 2"	4"	1"	---	AMERICAN STANDARD No. 3461 WHITE V.C. ELONGATED SIPHON JET FLOOR MOUNT (1.28 GPF) BOWL WITH TOP SPUD, CENTOCO 500STSCC WHITE OPEN FRONT SEAT AND SLOAN ROYAL FLUSH VALVE No. 111-1.28. REFER TO ARCHITECTURAL DWGS. FOR MOUNTING HEIGHT. MOUNTING HEIGHT TO COMPLY WITH ADULT ADA REQUIREMENT.
LAVATORY L-1 ♿	2" 1-1/2"	2"	1/2"	1/2"	AMERICAN STANDARD "CADET EVERCLEAN" ROUND, SELF-RIMMING, DROP-IN BASIN No. 0427; WITH AMERICAN STANDARD "MONTERREY" FAUCET No. 7500.170.002 POLISHED CHROME. PROVIDE MCGUIRE No. LK-155A FIXED GRID DRAIN STRAINER, MCGUIRE CHROME PLATED CAST BRASS P-TRAP, TAILPIECE, STOPS AND SUPPLIES. PROVIDE TMV-1, TRUEBRO OR EQUAL INSULATION KIT.
SHOWER SH-1	2" 1-1/2"	2"	1/2"	1/2"	BRADLEY MODEL No. WS-1WCA INDIVIDUAL COVERALL WALL SHOWER, COMPLETELY PREASSEMBLED WALL SHOWER UNIT. PROVIDE 2" FD-1 FOR BUILT UP SHOWER BASE.
SHOWER SH-2 ♿	2" 1-1/2"	2"	1/2"	1/2"	BRADLEY MODEL No. WS-1WCA-ADA INDIVIDUAL COVERALL WALL SHOWER - ADA COMPLIANT, COMPLETELY PREASSEMBLED WALL SHOWER UNIT. PROVIDE 2" FD-1 FOR BUILT UP SHOWER BASE.
KITCHEN SINK 2-COMP SK-1	2" 1-1/2"	2"	1/2"	1/2"	ELKAY No. ELR432212; "LUSTERTONE" EQUAL DOUBLE BOWL DROP-IN SINK, 43"x22"x12-1/8", CHICAGO No 1102-HA8-317ABCP DECK MOUNTED 8" FIXED CENTERS FAUCET WITH 8" SWING HIGH ARCH SPOUT, 4" WRISTBLADE HANDLES AND SIDE SPRAY. PROVIDE TMV-1, STOPS, S.S. SUPPLIES, WYE-BRANCH TAILPIECE FOR RO-1 DRAIN. INSINKERATOR BADGER 5 1/2 HP GARBAGE DISPOSAL, AND CHROME PLATED CAST BRASS P-TRAP.
KITCHEN SINK 1-COMP SK-2 ♿	2" 1-1/2"	2"	1/2"	1/2"	ELKAY "LUSTERTONE" CLASSIC STAINLESS STEEL SINK, No. LRAD191865PD, 19"X18"X6-1/2". CHICAGO No 1102-HA8-317ABCP DECK MOUNTED 8" FIXED CENTERS FAUCET WITH 8" SWING HIGH ARCH SPOUT, 4" WRISTBLADE HANDLES AND SIDE SPRAY. PROVIDE TMV-1, STOPS, S.S. SUPPLIES, AND CHROME PLATED CAST BRASS P-TRAP, DEARBORN SAFETY SERIES INSULATION KIT WHERE PIPING IS EXPOSED.
SERVICE SINK SK-3	2" 1-1/2"	2"	1/2"	1/2"	ELKAY STAINLESS STEEL WALL HUNG SERVICE SINK, No. ESS23192, 23"X18-1/2"X12", ELKAY WALL MOUNT FAUCET WITH 8" HOLE SPREAD, GOOSENECK SPOUT, 4" LEVER HANDLES, No LK940GN05T4H. PROVIDE STOPS, S.S. SUPPLIES, AND CHROME PLATED CAST BRASS P-TRAP.
HOSE BIBB HB-1	--- ---	---	3/4"	---	WATTS HOSE BIBB/SILL COCK No. 5C8 SERIES, CAST BRASS, WALL MOUNT, TAMPER-PROOF VACUUM BREAKER WITH BREAK-AWAY SCREW, ADJUSTABLE PACKING NUT CARTRIDGE, NO KINK FAUCET WITH TEE HANDLE.
MOP SINK MS-1	3" 2"	3"	3/4"	3/4"	FIAT MODEL No. MSB 2424 MOP SERVICE BASIN. INCLUDE STAINLESS STEEL BUMPER GUARD AND FIAT WALL MOUNTED FAUCET No. 830-AA WITH TOP BRACE, VACUUM BREAKER, PAIL HOOK, AND STERN WILLIAMS No. T-35 BRACKET AND HOSE. PROVIDE STAINLESS STEEL SPLASH PANELS.
EMERGENCY EYE WASH EW-1 ♿	--- ---	---	---	1/2"	--- GUARDIAN EYE/FACE WASH No. G1750P-T; ORANGE ABS PLASTIC BOWL; TWO (2) FS-PLUS SPRAY HEADS WITH FLIPTOP DUST COVER AND FILTER; POWDER COATED CAST ALUMINUM FLAG HANDLE ACTIVATION; CHROME PLATED STAY-OPEN BALL VALVE WITH TEFLON SEAL. RE: 3/P602.
REVERSE OSMOSIS RO-1	--- ---	3/4"	1/2"	---	CULLIGAN MODEL No. CRO-100AC REVERSE OSMOSIS PRE-ASSEMBLED WALL MOUNT, 100 GPD SYSTEM TO INCLUDE CPORT 01004765 9 GALLON STORAGE TANK. INSTALL UNDER KITCHEN SINK AND POT FILLER CABINETS, AT ICE MACHINE(S) AND IN PANTRY AS INDICATED ON PLAN. ROUTE FILTERED WATER TO FIXTURES. RE: 13/P501
BACKFLOW PREVENTER DCDA	--- ---	---	---	6"	--- AMES FIRE & WATERWORKS LFC300 LEAD FREE DOUBLE CHECK DETECTOR INQUIRE WITH GOVERNING AUTHORITIES FOR LOCAL INSTALLATION REQUIREMENTS. (FIRE PROTECTION)
POT FILLER PF-1	--- ---	---	---	1/2"	--- CHICAGO MODEL No. 515-ABCP WALL MOUNTED SINGLE HOLE POT & KETTLE FILLER FAUCET.
ICE MAKER BOX IMB-1	--- ---	---	---	1/2"	--- PPP ICE MAKER BOX No. MM-500 MIMB. RE: 12/P601.
WASHING MACHINE BOX WMB-1	2" 2"	2"	3/4"	3/4"	PPP WASHING MACHINE BOX No. MM-500PLB. RE: 9/P601.
FLOOR SINK FS-1	SEE PLAN SEE PLAN	SEE PLAN	---	---	WATTS FLOOR SINK No. FS-740 SERIES; CAST IRON BODY, NO HUB OUTLET, PORCELAIN ENAMEL COATED CAST IRON 3/4 GRATE.
FLOOR DRAIN FD-1	SEE PLAN SEE PLAN	SEE PLAN	---	---	WATTS FLOOR DRAIN No. FD-200 SERIES, EPOXY COATED, CAST IRON BODY, NO HUB OUTLET, SQUARE 6"X6" NICKEL BRONZE STRAINER.
FLOOR DRAIN FD-2	SEE PLAN SEE PLAN	SEE PLAN	---	---	ZURN No. Z-510-S-G CAST IRON DRAIN WITH 9" DIA. DEEP FLANGE GRATE AND SECONDARY STRAINER. PROVIDE DEEP SEAL P-TRAP.
TRAP PRIMER TP-1	--- ---	---	---	1/2"	--- PROVIDE SLOAN No. VBF-72-A2 FLUSH VALVE VACUUM BREAKER TRAP REFILL SUPPLY. AFFIX TO WATER CLOSET NEAREST TO DRAIN SUPPLIED. ALL EXPOSED TUBING TO BE CHROME PLATED AND RUN AS SHORT AS POSSIBLE TO WALL. CONCEALED DRAIN TUBING SHALL BE 1/2" TYPE 'K' SOFT COPPER SLOPING UNIFORMLY TO DRAIN.
TRAP PRIMER TP-2	--- ---	---	---	1/2"	--- PPP PRODUCTS "PRIME TIME" ELECTRONIC TRAP PRIMER MODEL NO. PT-4 UP TO 12 TRAP PRIMER OUTLETS. PLUG ANY UNUSED OUTLETS. 4
TRENCH DRAIN TD-1 (APPARATUS BAYS)	4" ---	---	---	---	J.R. SMITH ZP TRENCH 12" WIDE 9960 SERIES POLYPROPYLENE TRENCH DRAIN SYSTEM WITH EXTRA HEAVY DUTY, DIN 19580 DUCTILE IRON GRATE.
TRENCH DRAIN TD-2 (LAUNDRY)	4" 2"	---	---	---	BLUCHER MODEL No. B674-14674-08 12" WIDE, 8" DEEP, STAINLESS STEEL TRENCH DRAIN WITH LINT SCREENS.
TRENCH DRAIN TD-3 (WASH BAY)	4" ---	---	---	---	WASH BAY TRENCH DRAINS WITH CATCH BASIN UNDER ALTERNATE #2 PROVIDED BY WASH BAY VENDOR.
EMERGENCY GAS SHUTOFF EGS-1	--- ---	---	---	---	LACS FIRE HALL CONTROL PANEL. RE: 11/P601.
THERMOSTATIC MIXING VALVE TMV-1	--- ---	---	3/4"	3/4"	POWERS LFE-480 SERIES ADJUSTABLE THERMOSTATIC, ASSE 1016, POINT OF USE MIXING VALVE WITH INLET CHECK STOPS TO LIMIT HOT WATER TEMPERATURE TO MAXIMUM 105° F. AT FAUCET OUTLET. SUPPLY CW TO
FLOOR CLEANOUT FCO	--- ---	---	---	---	J.R. SMITH No. 4020 SERIES FINISHED FLOOR CLEANOUT WITH "TWIS-TO-FLOOR" ADJUSTABLE ROUND NICKEL BRONZE TOP.
GRADE CLEANOUT GCO	--- ---	---	---	---	J.R. SMITH No. SQ-4 1388-97 DURO-COATED CAST IRON CLEANOUT WITH WATER TIGHT COUNTER-SUNK PLUG AND SCORIATED CAST IRON TOP WITH FRAME.
TRAFFIC CLEANOUT TCO	--- ---	---	---	---	J.R. SMITH No. SQ-4 1388-97 DURO-COATED CAST IRON CLEANOUT WITH WATER TIGHT COUNTER-SUNK PLUG AND SCORIATED CAST IRON TOP WITH FRAME. PROVIDE TRAFFIC RATED BOX.
DOUBLE YARD CLEANOUT DYCO	--- ---	---	---	---	J.R. SMITH No. SQ-4 1388-97 DURO-COATED CAST IRON CLEANOUT WITH WATER TIGHT COUNTER-SUNK PLUG AND SCORIATED TOP WITH FRAME. INSTALL IN 13"X18" CONCRETE PAD. RE: 7/P602.
WALL CLEAN-OUT WCO	--- ---	---	---	---	ZURN ZN-1443-BP WALL CLEANOUT, DURA-COATED CAST IRON BODY, GAS AND WATERTIGHT ABS TAPERED THREAD PLUG, AND NICKEL BRONZE SECURED SQUARE, SMOOTH WALL ACCESS COVER AND FRAME. RE: 4/P601

WATER HEATER SCHEDULE

PLAN MARK	MINIMUM ROUGH-IN SIZES WASTE	VENT	DRAIN	CW	HW	DESCRIPTION
GAS WATER HEATER GWH-1	---	---	---	1 1/4"	1 1/4"	A.O. SMITH "PROLINE" No. FCG-100, 98 GALLON STORAGE ASME TANK, 75,100 BTUH INPUT, 81 GPH RECOVERY @ 90° TEMP. RISE, INCLUDES FIXED AUTOMATIC GAS SHUTOFF DEVICE AND PUSH BUTTON SPARK IGNITION.
EXPANSION TANK ET-1	---	---	---	3/4"	---	AMTROL THERM-X-TROL MODEL ST-5-C, ASME THERMAL EXPANSION ABSORBERS, MAXIMUM WORKING PRESSURE 150 PSIG, TOTAL VOLUME 2.1 GALLONS.
CIRCULATION PUMP CP-1	---	---	---	---	3/4"	GRUNDFOS No. UP43-75F ALL BRONZE FLANGED RECIRCULATION PUMP, WIRED FOR 120/60/1 POWER WITH 1/6 HP MOTOR AND FITTED WITH REMOTE HEAT SENSING AQUASTAT CONTROLLER WITH TS-1 SHUT-OFF TIMER. RE: 6/P602
TIME SWITCH TS-1	---	---	---	---	---	INTERMATIC DIGITAL 24 HOUR TIME SWITCH WITH BATTERY BACK-UP. INSTALL ON WALL ADJACENT TO CIRCULATION PUMP. COORDINATE POWER REQUIREMENTS WITH ELECTRICAL CONTRACTOR. RE: 7 & 8/P601

AIR COMPRESSOR FIXTURE SCHEDULE

PLAN MARK	MINIMUM ROUGH-IN SIZES WASTE	VENT	DRAIN	CW	HW	DESCRIPTION
AIR COMPRESSOR AC-1	---	---	---	---	---	INGERSOLL RAND No. 2475N7.5-P 80 GALLON VERTICAL RECEIVER, TWO STAGE AIR COMPRESSOR. 7.5 HP, 208V, 3Ø AND 24.3 CFM AT 175 PSI MAXIMUM PRESSURE. PROVIDE WITH INGERSOLL RAND MOTOR STARTER KIT. COORDINATE POWER REQUIREMENTS WITH ELECTRICAL CONTRACTOR.
AIR DRYER AD-1	---	---	---	---	---	INGERSOLL RAND No. D72IN AIR DRYER (0.37 KW) CAPABLE OF 42 CFM AT 100 PSI. COORDINATE 120V/1PH POWER WITH ELECTRICAL CONTRACTOR.

SAND OIL SEPARATOR SCHEDULE

CALCULATIONS

SOI-1: 11 TRENCH DRAINS x 8 DFU x 0.25 USAGE FACTOR x 3 GPM/DFU = 66.0 GPM

TOTAL FLOWRATE = 66.0 GPM

PLAN MARK	MAKE & MODEL NO.	DESCRIPTION
SOI-1 SAND/OIL SEPARATOR	PARK EQUIPMENT COMPANY SOCMP-750-75 WITH GAS TIGHT COVERS	750 US GAL LIQUID CAPACITY; 375 GAL OIL CAPACITY; 9,900 LBS EMPTY WEIGHT; 7'-10" LONG x 4'-4" WIDE x 6'-0" DEEP; INLET FL1= 4'-5"; OUTLET FL2= 4'-2"; 75 GPM FLOW RATE
SW-1 SAMPLING WELL	PARK EQUIPMENT COMPANY SWG-156 WITH GAS TIGHT COVERS	PRECAST CONCRETE SAMPLING WELL WITH HEAVY DUTY CAST IRON FRAME AND COVER. PIPE SIZE IS 4".

SHOCK ARRESTER SCHEDULE

P.D.I. SYMBOL	FIXTURE UNITS	SIZE
A	1-11	1/2" NPT
B	12-32	3/4" NPT
C	33-60	1" NPT
D	61-113	1 1/4" NPT
E	114-154	1 1/2" NPT
F	155-330	2" NPT

SHOCK ARRESTORS SHALL HAVE LIFETIME WARRANTY AND SHALL BE CERTIFIED BY THE MANUFACTURER TO BE SUITABLE FOR INSTALLATION WITHOUT REQUIREMENT FOR ACCESS DOORS.

DBR
9601 McAllister Freeway, Suite 410
San Antonio, Texas 78216
210.546.0200 v 210.546.0201 f
TBPE Firm Registration NO. 2234

DBR Project Number 196024.000

JC	BV	DA	WJ	JC

PROFESSIONAL SEAL

STATE OF TEXAS
M. JACQUELINE CHANG
124987
LICENSED
PROFESSIONAL ENGINEER
01/30/2020

martinez ARCHITECTS
Martinez Architect, LP
900 Rockmead, Suite 250
Houston, Texas 77339
281.346.7371

DESIGN TEAM

Architectural
Martinez Architects

Civil Engineer
Maverick Engineering

Structural
Matrix Structural Engineers

M/E/P/T
DBR

Landscape Architect
KDC Associates

FIRE STATION #11

CITY OF MIDLAND
6600 BRIARWOOD AVE
MIDLAND, TX 79707

PROJECT No: MA 18017
DATE: 01/30/2020

No.	Date	Description
	01/30/2020	100% CD
4	02/26/2020	Addendum 04

PLUMBING SCHEDULES

P501

4.1799

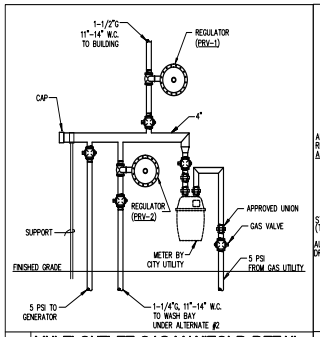

1 MULTI OUTLET GAS MANIFOLD DETAIL
NOT TO SCALE

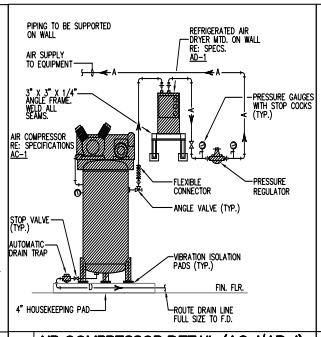

2 AIR COMPRESSOR DETAIL (AC-1/AD-1)
NOT TO SCALE

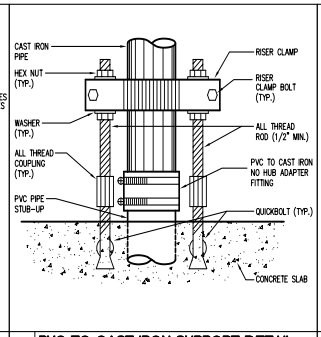

3 PVC TO CAST IRON SUPPORT DETAIL
NOT TO SCALE

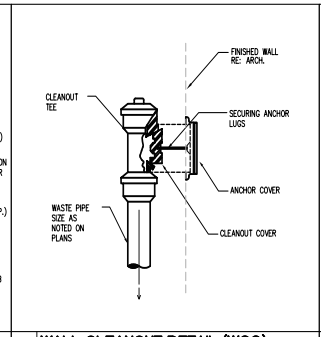

4 WALL CLEANOUT DETAIL (WCO)
NOT TO SCALE

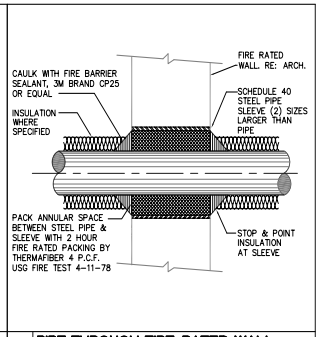

5 PIPE THROUGH FIRE-RATED WALL
NOT TO SCALE

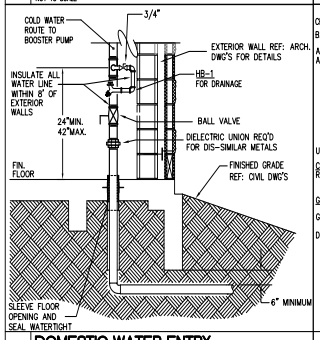

6 DOMESTIC WATER ENTRY
NOT TO SCALE

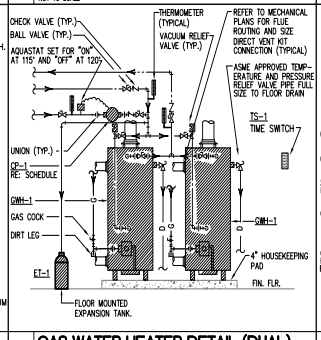

7 GAS WATER HEATER DETAIL (DUAL)
NOT TO SCALE

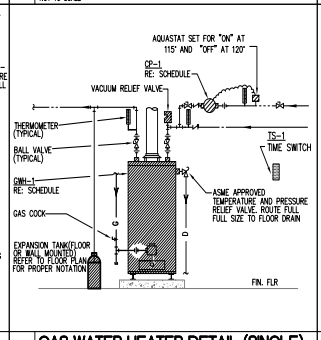

8 GAS WATER HEATER DETAIL (SINGLE)
NOT TO SCALE

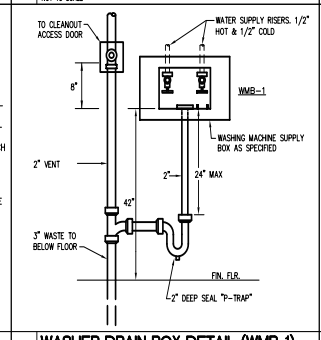

9 WASHER DRAIN BOX DETAIL (WMB-1)
NOT TO SCALE

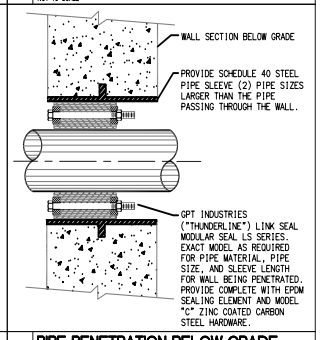

10 PIPE PENETRATION BELOW GRADE
NOT TO SCALE

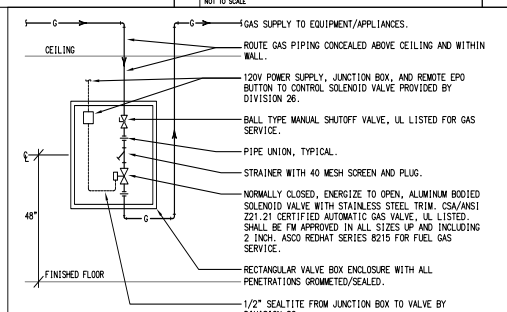

11 EMERGENCY GAS SHUT-OFF DETAIL (EGS-1)
NOT TO SCALE

GENERAL NOTES:

1. REFER TO PLAN DRAWINGS FOR PIPE SIZES.
2. VALVES SHALL BE LINE SIZED.
3. COORDINATE ROUGH-INS AND INSTALLATION IN FIELD AMONGST THE TRADES.
4. PIPING AND APPURTENANCES SHALL BE SECURELY SUPPORTED WITHIN VALVE BOX.
5. DETAIL DEPICTS A "DOWN-FEED" INSTALLATION TO THE CONTROL VALVE. OTHER PIPE ROUTING ARRANGEMENTS SHALL BE SIMILARLY CONFIGURED.
6. VALVE BOX SHALL BE: FULLY RECESSED TYPE UNLESS NOTED OTHERWISE ON DRAWINGS; CONSTRUCTED OF 16 GAUGE SATIN FINISH STAINLESS STEEL OR ENAMELED FINISHED STEEL/PRIME COATED GALVANNEALED STEEL (PROVIDED IN OR PAINTED FINAL COLOR AS SELECTED BY ARCHITECT/OWNER); COMPLETE WITH CONCEALED CONTINUOUS PIANO HINGE AND WITH SCREWDRIVER LATCH OR CYLINDER KEYED LOCK AS SELECTED BY ARCHITECT/OWNER. PROVIDE IN DIMENSIONS AS SUITED FOR PIPE/VALVE SIZES AND TO ENSURE MAINTENANCE ACCESS - TYPICALLY 18"W X 30"H X 6" D, COORDINATE IN FIELD. MANUFACTURED BY LACS, ELMDOR, ACUDOR, OR MIFAB.

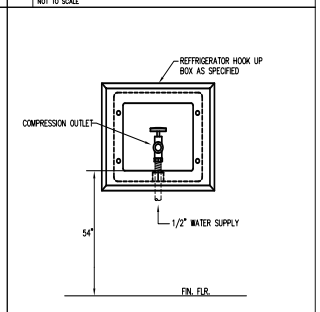

12 WALL BOX DETAIL (IMB-1)
NOT TO SCALE

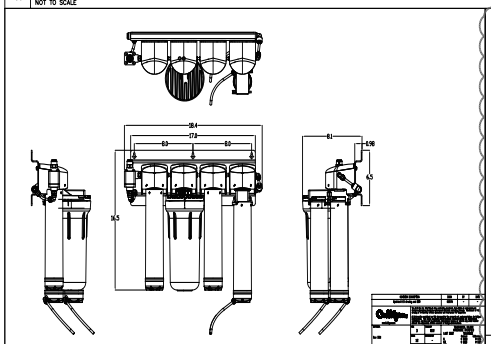

13 REVERSE OSMOSIS DETAIL (RO-1)
NOT TO SCALE

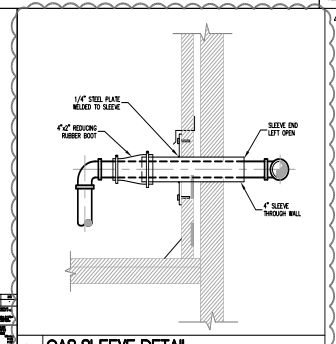

14 GAS SLEEVE DETAIL
NOT TO SCALE

PROFESSIONAL SEAL

STATE OF TEXAS
M. JACQUELINE CHANG
124987
LICENSED
PROFESSIONAL ENGINEER
01/30/2020

martinez ARCHITECTS

Martinez Architect, LP
900 Rockmead, Suite 250
Houston, Texas 77339
281.346.7371

DESIGN TEAM

Architectural
Martinez Architects

Civil Engineer
Maverick Engineering

Structural
Matrix Structural Engineers

M/E/P/T
DBR

Landscape Architect
KDC Associates

FIRE STATION #11

CITY OF MIDLAND
6600 BRIARWOOD AVE
MIDLAND, TX 79707

PROJECT No: MA 18017
DATE: 01/30/2020

No.	Date	Descrption
	01/30/2020	100% CD
4	02/26/2020	Addendum 04

PLUMBING DETAILS

P601

DBR
9601 McAllister Freeway, Suite 410
San Antonio, Texas 78216
210.546.0200 v 210.546.0201 f
TBPE Firm Registration NO. 2234

DBR Project Number 196024.000

JC	BV	DA	WJ	JC

4.1800

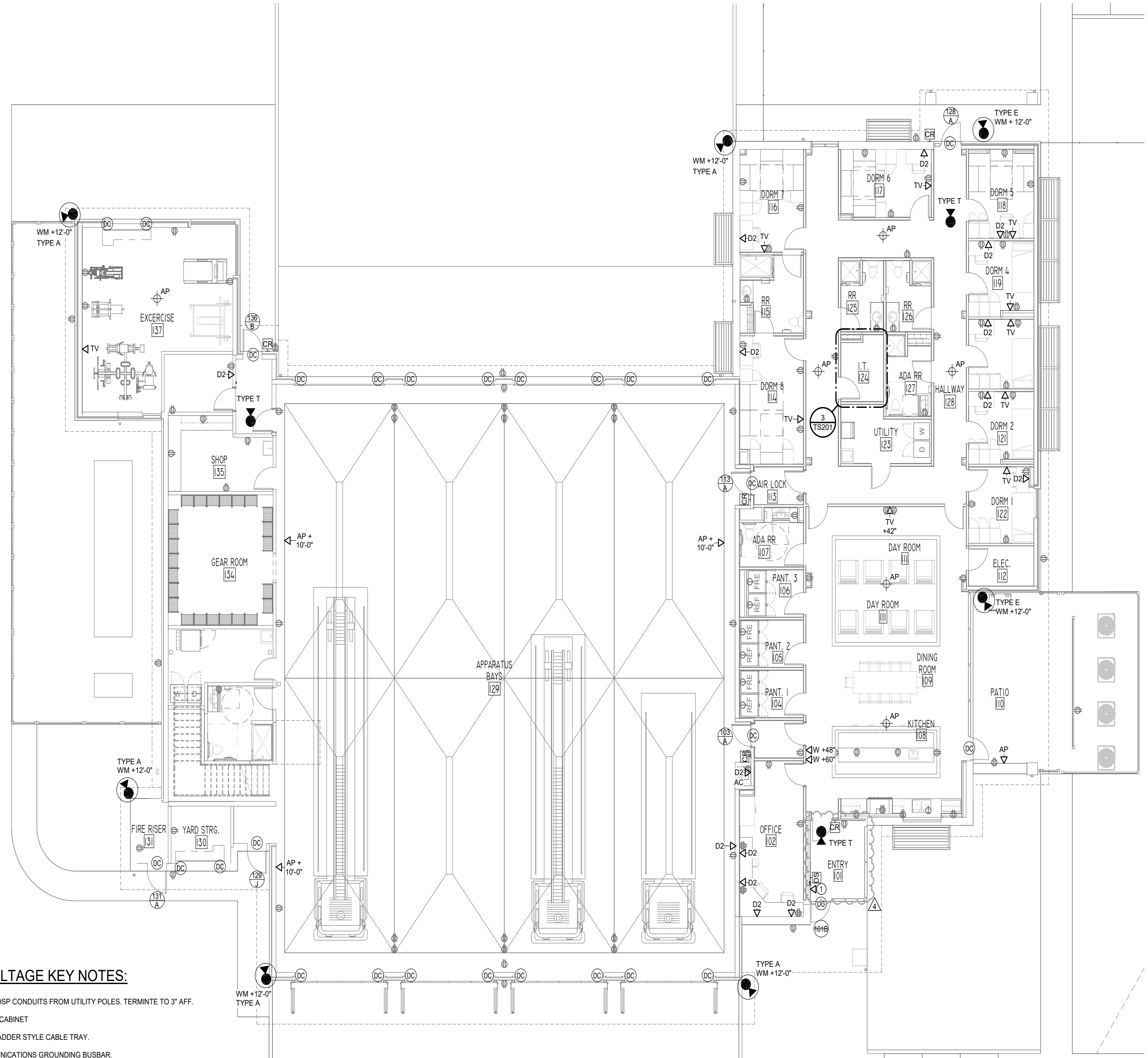

1 LEVEL 1 LOW VOLTAGE PLAN
TS201 1/8" = 1'-0"

LOW VOLTAGE KEY NOTES:

1. FOUR (3) 4" OSP CONDUITS FROM UTILITY POLES. TERMINTE TO 3" AFF.
2. EQUIPMENT CABINET
3. 12"W x 4"D LADDER STYLE CABLE TRAY.
4. TELECOMMUNICATIONS GROUNDING BUSBAR.
5. THREE (3) 4" SLEEVE UP TO LEVEL 1 ACCESSIBLE CEILING PLENUM.

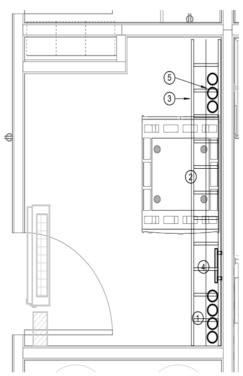

3 MDF LAYOUT
TS201 1/2" = 1'-0"

LOW VOLTAGE GENERAL NOTES

A. REFERENCE NOTES AND LEGENDS AND SPECIFICATION FOR MATERIALS AND METHODS.

B. REFERENCE SHEET TX.X FOR NOTES AND SYMBOL LEGENDS

C. REFERENCE SHEET TS5XX SERIES FOR DETAILS.

LOW VOLTAGE KEYED NOTES

1. INDICATES THE LOCATION OF A 911 CALL BOX PART # IS-SS-2RA. CONTRACTOR PROVIDED AND INSTALL ONE (1) CATEGORY 6 CABLE TO THIS LOCATION. POINT PRIOR TO INSTALLATION. 911 BOX AND PHONE TO BE PROVIDED AND INSTALLED BY OTHERS.

TRUE NORTH N PROJECT NORTH N

DBR
9601 McAllister Freeway, Suite 410
San Antonio, Texas 78216
210.546.0200 v 210.546.0201 f
TBPE Firm Registration No. 2234

DBR Project Number 196023.000

JC	BV	CL	WJ	JC

PROFESSIONAL SEAL

Bicsi Weifang Wang BICSI ID # 165482 02/26/2020

martinez ARCHITECTS
Martinez Architect, LP
900 Rockmead, Suite 250
Houston, Texas 77339
281.346.7371

DESIGN TEAM

Architectural
Martinez Architects

Civil Engineer
Maverick Engineering

Structural
Matrix Structural engineers

M/E/P/T
DBR

Landscape Architect
KDC Associates

Consultant 5 Discipline Type
Consultant 5 Name

FIRE STATION #11
CITY OF MIDLAND
6600 BRIARWOOD AVE
MIDLAND, TX 79707

PROJECT No: MA 18017
DATE: 01/30/2020

No.	Date	Description
	01/30/2020	100% CD
4	02/26/2020	Addendum 04

LEVEL 1 LOW VOLTAGE PLAN

TS201

4.1801

FUEL SYSTEM NOTES – MIDLAND FIRE STATION 11
(ATTACHMENT TO ADDENDUM #4)

1. Dispenser Brand - Bennett Commercial Electronic Dispenser, Single Hose units, Painted doors, Pulse output is required. Unlead dispenser 20 GPM, Diesel dispenser 60 GPM Quantity per product - shown on plans. Or equal.

2. Submersible Pumps - Unlead - 3/4 HP
Diesel - 2 HP
Both with control boxes
Leak Detectors - Yes
Red Jacket or Franklin Fueling

3. Clock Gauge only - Morrison Bros. or OPW.

4. All required tank hardware - Morrison Bros. or OPW

5. Dispenser Sumps - Bravo Systems Aboveground Sump, Galvanealed Steel

6. Hanging Hardware - 3/4" or 1" pressure activated auto nozzle, swivel, break-a-way, whip hose, hardwall pump hose min. 17'.

7. Fuel Piping - Single wall steel pipe - all aboveground.

8. Above-Ground Storage Tanks - Double Wall UL142, openings as required, ladder on one end of each tank, primary and secondary emergency vents required.

9. Remote Fills - Morrison Bros. 515 series, steel construction. Morrison Bros. or OPW

10. Stage 1 is required on Unleaded.

11. Follow regulatory requirements for decals. Federal, State & Local requirements apply.

12. Island Forms - See Plans.

13. 1500 Gallon DEF System - Tecalemit All In One insulated Package or equal. Tie to Fuel Management System.

"General Decision Number: TX20200261 01/03/2020

Superseded General Decision Number: TX20190261

State: Texas

Construction Type: Building

County: Midland County in Texas.

BUILDING CONSTRUCTION PROJECTS (does not include single family homes or apartments up to and including 4 stories).

Note: Under Executive Order (EO) 13658, an hourly minimum wage of $10.80 for calendar year 2020 applies to all contracts subject to the Davis-Bacon Act for which the contract is awarded (and any solicitation was issued) on or after January 1, 2015. If this contract is covered by the EO, the contractor must pay all workers in any classification listed on this wage determination at least $10.80 per hour (or the applicable wage rate listed on this wage determination, if it is higher) for all hours spent performing on the contract in calendar year 2020. If this contract is covered by the EO and a classification considered necessary for performance of work on the contract does not appear on this wage determination, the contractor must pay workers in that classification at least the wage rate determined through the conformance process set forth in 29 CFR 5.5(a)(1)(ii) (or the EO minimum wage rate, if it is higher than the conformed wage rate). The EO minimum wage rate will be adjusted annually. Please note that this EO applies to the above-mentioned types of contracts entered into by the federal government that are subject to the Davis-Bacon Act itself, but it does not apply to contracts subject only to the Davis-Bacon Related Acts, including those set forth at 29 CFR 5.1(a)(2)-(60). Additional information on contractor requirements and worker protections under the EO is available at www.dol.gov/whd/govcontracts.

Modification Number	Publication Date
0	01/03/2020

BOIL0074-003 01/01/2017

	Rates	Fringes
BOILERMAKER	$ 28.00	22.35

ENGI0178-005 06/01/2014

	Rates	Fringes
POWER EQUIPMENT OPERATOR		
(1) Tower Crane	$ 29.00	10.60
(2) Cranes with Pile Driving or Caisson Attachment and Hydraulic Crane 60 tons and above	$ 28.75	10.60
(3) Hydraulic cranes 59 Tons and under	$ 27.50	10.60

* IRON0084-011 06/01/2019

	Rates	Fringes
IRONWORKER, ORNAMENTAL	$ 24.42	7.12

---

* PLUM0404-001 09/01/2019

	Rates	Fringes
PLUMBER	$ 25.55	8.56

SUTX2014-037 07/21/2014

	Rates	Fringes
BRICKLAYER	$ 20.00	0.00
CARPENTER	$ 13.82	0.00
CEMENT MASON/CONCRETE FINISHER	$ 13.76	0.00
ELECTRICIAN	$ 23.18	6.31
INSULATOR - MECHANICAL (Duct, Pipe & Mechanical System Insulation)	$ 19.77	7.13
IRONWORKER, REINFORCING	$ 12.27	0.00
IRONWORKER, STRUCTURAL	$ 22.16	5.26
LABORER: Common or General	$ 11.80	0.00
LABORER: Mason Tender - Brick	$ 11.38	0.00
LABORER: Mason Tender - Cement/Concrete	$ 10.58	0.00
LABORER: Pipelayer	$ 12.49	2.13
LABORER: Roof Tearoff	$ 11.28	0.00
OPERATOR: Backhoe/Excavator/Trackhoe	$ 14.25	0.00
OPERATOR: Bobcat/Skid Steer/Skid Loader	$ 13.93	0.00
OPERATOR: Bulldozer	$ 18.29	1.31
OPERATOR: Drill	$ 16.22	0.34
OPERATOR: Forklift	$ 14.83	0.00
OPERATOR: Grader/Blade	$ 13.37	0.00
OPERATOR: Loader	$ 13.55	0.94
OPERATOR: Mechanic	$ 17.52	3.33
OPERATOR: Paver (Asphalt, Aggregate, and Concrete)	$ 16.03	0.00
OPERATOR: Roller	$ 12.70	0.00

PAINTER (Brush, Roller, and Spray).....$ 15.00 0.73

PIPEFITTER.....$ 25.80 8.55

ROOFER.....$ 14.75 0.00

SHEET METAL WORKER (HVAC Duct Installation Only).....$ 22.73 7.52

SHEET METAL WORKER, Excludes HVAC Duct Installation.....$ 19.50 0.00

TILE FINISHER.....$ 11.22 0.00

TILE SETTER.....$ 14.74 0.00

TRUCK DRIVER: Dump Truck.....$ 12.39 1.18

TRUCK DRIVER: Flatbed Truck.....$ 19.65 8.57

TRUCK DRIVER: Semi-Trailer Truck.....$ 12.50 0.00

TRUCK DRIVER: Water Truck.....$ 12.00 4.11

WELDERS - Receive rate prescribed for craft performing operation to which welding is incidental.

==========

Note: Executive Order (EO) 13706, Establishing Paid Sick Leave for Federal Contractors applies to all contracts subject to the Davis-Bacon Act for which the contract is awarded (and any solicitation was issued) on or after January 1, 2017. If this contract is covered by the EO, the contractor must provide employees with 1 hour of paid sick leave for every 30 hours they work, up to 56 hours of paid sick leave each year. Employees must be permitted to use paid sick leave for their own illness, injury or other health-related needs, including preventive care; to assist a family member (or person who is like family to the employee) who is ill, injured, or has other health-related needs, including preventive care; or for reasons resulting from, or to assist a family member (or person who is like family to the employee) who is a victim of, domestic violence, sexual assault, or stalking. Additional information on contractor requirements and worker protections under the EO is available at www.dol.gov/whd/govcontracts.

Unlisted classifications needed for work not included within the scope of the classifications listed may be added after award only as provided in the labor standards contract clauses (29CFR 5.5 (a) (1) (ii)).

The body of each wage determination lists the classification and wage rates that have been found to be prevailing for the cited type(s) of construction in the area covered by the wage determination. The classifications are listed in alphabetical order of ""identifiers"" that indicate whether the particular rate is a union rate (current union negotiated rate for local),

a survey rate (weighted average rate) or a union average rate (weighted union average rate).

Union Rate Identifiers

A four letter classification abbreviation identifier enclosed in dotted lines beginning with characters other than ""SU"" or ""UAVG"" denotes that the union classification and rate were prevailing for that classification in the survey. Example: PLUM0198-005 07/01/2014. PLUM is an abbreviation identifier of the union which prevailed in the survey for this classification, which in this example would be Plumbers. 0198 indicates the local union number or district council number where applicable, i.e., Plumbers Local 0198. The next number, 005 in the example, is an internal number used in processing the wage determination. 07/01/2014 is the effective date of the most current negotiated rate, which in this example is July 1, 2014.

Union prevailing wage rates are updated to reflect all rate changes in the collective bargaining agreement (CBA) governing this classification and rate.

Survey Rate Identifiers

Classifications listed under the ""SU"" identifier indicate that no one rate prevailed for this classification in the survey and the published rate is derived by computing a weighted average rate based on all the rates reported in the survey for that classification. As this weighted average rate includes all rates reported in the survey, it may include both union and non-union rates. Example: SULA2012-007 5/13/2014. SU indicates the rates are survey rates based on a weighted average calculation of rates and are not majority rates. LA indicates the State of Louisiana. 2012 is the year of survey on which these classifications and rates are based. The next number, 007 in the example, is an internal number used in producing the wage determination. 5/13/2014 indicates the survey completion date for the classifications and rates under that identifier.

Survey wage rates are not updated and remain in effect until a new survey is conducted.

Union Average Rate Identifiers

Classification(s) listed under the UAVG identifier indicate that no single majority rate prevailed for those classifications; however, 100% of the data reported for the classifications was union data. EXAMPLE: UAVG-OH-0010 08/29/2014. UAVG indicates that the rate is a weighted union average rate. OH indicates the state. The next number, 0010 in the example, is an internal number used in producing the wage determination. 08/29/2014 indicates the survey completion date for the classifications and rates under that identifier.

A UAVG rate will be updated once a year, usually in January of each year, to reflect a weighted average of the current negotiated/CBA rate of the union locals from which the rate is based.

WAGE DETERMINATION APPEALS PROCESS

1.) Has there been an initial decision in the matter? This can be:

* an existing published wage determination
* a survey underlying a wage determination
* a Wage and Hour Division letter setting forth a position on a wage determination matter
* a conformance (additional classification and rate) ruling

On survey related matters, initial contact, including requests for summaries of surveys, should be with the Wage and Hour Regional Office for the area in which the survey was conducted because those Regional Offices have responsibility for the Davis-Bacon survey program. If the response from this initial contact is not satisfactory, then the process described in 2.) and 3.) should be followed.

With regard to any other matter not yet ripe for the formal process described here, initial contact should be with the Branch of Construction Wage Determinations. Write to:

Branch of Construction Wage Determinations
Wage and Hour Division
U.S. Department of Labor
200 Constitution Avenue, N.W.
Washington, DC 20210

2.) If the answer to the question in 1.) is yes, then an interested party (those affected by the action) can request review and reconsideration from the Wage and Hour Administrator (See 29 CFR Part 1.8 and 29 CFR Part 7). Write to:

Wage and Hour Administrator
U.S. Department of Labor
200 Constitution Avenue, N.W.
Washington, DC 20210

The request should be accompanied by a full statement of the interested party's position and by any information (wage payment data, project description, area practice material, etc.) that the requestor considers relevant to the issue.

3.) If the decision of the Administrator is not favorable, an interested party may appeal directly to the Administrative Review Board (formerly the Wage Appeals Board). Write to:

Administrative Review Board
U.S. Department of Labor
200 Constitution Avenue, N.W.
Washington, DC 20210

4.) All decisions by the Administrative Review Board are final.

===

END OF GENERAL DECISION
"

FIRE STATION 5 - CONSTRUCTION STAGING

Per the City of Midland's direction, the parcel indicated as "Staging Site" on the aerial map below is available for use by the contractor during the construction of Station 5, under the following conditions:

- No trees shall be removed or damaged.

- The area will be returned to park status with the replacement of damaged sod (with sod, not seeding).

- Contractors shall utilize the "I" Street bridge to return down Scharbauer Drive, and shall not cut back through the neighborhood on the south.

- Staging shall be moved to the job site as soon a possible during construction and the parkland returned to its park state.

SERVICE | QUALITY | INTEGRITY | SUSTAINABILITY

9601 McAllister Freeway
Suite 410
San Antonio, TX 78216
v 210.546.0200

Addendum

DATE
February 27, 2020

ADDENDUM NO.
05

PROJECT 196023.000| Midland Fire Station #5

The work described herein shall be added to the scope of work defined by the contract documents or it shall modify the scope of work defined by the contract documents as described. This work shall become a part of the contract documents by addendum.

DRAWINGS

Item 01 **Sheet P201 – Level 1 Plumbing Plan**

A. Added General Note W: "Dry pipe sprinkler system is required for the parking canopy. Dry pipe system compressor shall be located in riser room; provide 120V power as required."

END OF ADDENDUM

City Council Agenda

Approved for Agenda:

City Manager's Office

MEETING DATE: 4/28/2020

TO: City Council / City Manager

FROM: Morris Williams, Assistant City Manager

SUBJECT: Consider a resolution to deny the Distribution Cost Recovery Factor (DCRF) application proposed by Oncor.

Purpose:

To deny the Distribution Cost Recovery Factor (DCRF) application proposed by Oncor.

Recommended City Council Action

☒ Approve ☐ Deny ☐ Directional / Informational

Fiscal Impact:

No fiscal impact to the City of Midland at this time.

Discussion:

The City is an electric utility customer of Oncor Electric Delivery Company LLC ("Oncor" or "Company"). The Oncor Cities Steering Committee ("OCSC") is a coalition of similarly situated cities served by Oncor that have joined together to efficiently and cost effectively review and respond to electric issues affecting rates charged in Oncor's service area in matters before the Public Utility Commission ("PUC" or "Commission") and the courts.

On April 3, 2020, Oncor filed an Application to Amend its Distribution Cost Recovery Factor ("DCRF") with each of the cities retaining original jurisdiction and with the Commission in Docket No. 50734. In the filing, the Company sought to increase distribution rates by $75.9 million annually (an approximately $0.88 increase to the average residential customer's bill).

The resolution authorizes the City to join with OCSC to evaluate the filing, determine whether the filing complies with law, and if lawful, to determine what further strategy, including settlement, to pursue.

1. This section authorizes the city to participate with OCSC as a party in the Company's DCRF filing in PUC Docket No. 50734.

2. This section authorizes the hiring of Lloyd Gosselink and consultants to review the filing, negotiate with the Company, and make recommendations to the City regarding reasonable rates. It also authorizes OCSC to direct any necessary administrative proceedings or court litigation associated with an appeal of this application filed with the Commission.

3. This paragraph finds that the Company's application is unreasonable and should be denied.

4. This section states that the Company's current rates shall not be changed.

5. The Company will reimburse OCSC for its reasonable rate case expenses. Legal counsel and consultants approved by OCSC will submit monthly invoices that will be forwarded to Oncor for reimbursement.

6. This section merely recites that the resolution was passed at a meeting that was open to the public and that the consideration of the Resolution was properly noticed.

7. This section provides Oncor and counsel for OCSC will be notified of the City's action by sending a copy of the approved and signed resolution to counsel.

ONCOR CITIES THAT HAVE CEDED ORIGINAL JURISDICTION

Abbott
Alma
Alvarado
Alvord
Angus
Anna
Annetta North
Annetta South
Annona
Appleby
Argyle
Athens
Aurora
Bangs
Barry
Bartlett
Bellevue
Blanket
Blooming Grove
Boyd
Brownsboro
Buckholts
Buffalo
Burke
Bynum
Caddo Mills
Cameron
Campbell
Caney City
Canton
Carbon
Centerville
Chico
Chireno
Clarksville
Cockrell Hill
Collinsville
Comanche
Como
Cool
Corinth
Corsicana
Crandall
Crockett
Crowley
Cumby
Cushing
Dawson
Dean
Dorchester
Dublin
Ector
Edgecliff Village
Edgewood
Edom
Elgin
Elkhart
Emhouse
Enchanted Oaks
Eureka
Eustace
Everman
Forney
Frost
Garrett
Gholson
Godley
Golinda
Goodlow
Gorman
Grandfalls
Grandview
Granger
Grapeland
Gun Barrel City
Gunter
Hebron
Hewitt
Hickory Creek
Hideaway
Holland
Honey Grove
Hubbard
Hudson
Huntington
Hutto
Italy
Itasca
Jewett
Jolly
Josephine
Joshua
Justin
Kaufman
Keene
Kemp
Kerens
Knollwood
Krum
Ladonia
Lake Bridgeport
Lake Dallas
Lakeside City
Latexo
Lavon
Leona
Leroy
Lindsay
Lipan
Lorena
Lovelady
Lowry Crossing
Lucas
Mabank
Malakoff
Malone
Marquez
McGregor
Melissa
Mertens
Milano
Mildred
Milford
Millsap
Mobile City
Moody
Morgan's Point Resort
Mount Calm
Murchison
Mustang
Nacogdoches
Navarro

ONCOR CITIES THAT HAVE CEDED ORIGINAL JURISDICTION

Nevada
New Chapel Hill
New Fairview
Newark
Neylandville
Northlake
Oak Grove
Oak Leaf
Oak Valley
Oakwood
Oglesby
Ovilla
Payne Springs
Pecan Gap
Pecan Hill
Penelope
Pflugerville
Pleasant Valley
Ponder
Post Oak Bend
Powell
Poynor
Princeton
Pyote
Quinlan
Ranger
Reno - Lamar County
Reno - Parker County
Retreat
Rhome
Rice
Richland
Rockdale
Rogers
Rosser
Roxton
Royse City
Runaway Bay
Sadler
Savoy
Shady Shores
Southmayd
Springtown
St. Paul
Streetman
Taylor
Terrell
Thorndale
Thorntonville
Thrall
Tira
Tool
Trinidad
Valley View
Van Alstyne
Venus
Weir
Wells
West
Westbrook
Wickett
Wills Point
Windom
Wolfe City
Yantis
Zavalla

Lloyd Gosselink
ATTORNEYS AT LAW

816 Congress Avenue, Suite 1900
Austin, Texas 78701
Telephone: (512) 322-5800
Facsimile: (512) 472-0532

www.lglawfirm.com

Mr. Brocato's Direct Line: (512) 322-5857
Email: tbrocato@lglawfirm.com

M E M O R A N D U M

TO: Steering Committee of Cities Served by Oncor ("OCSC")

FROM: Thomas Brocato
Patrick Dinnin

DATE: April 7, 2020

RE: Oncor – Distribution Cost Recovery Factor ("DCRF") filing

CONFIDENTIAL/ATTORNEY-CLIENT COMMUNICATION
CITY ACTION REQUIRED NO LATER THAN JUNE 2, 2020

On April 3, 2020, Oncor Electric Delivery Company LLC ("Oncor" or "Company") filed an Application for Approval to Amend its Distribution Cost Recovery Factor ("DCRF") in Public Utility Commission of Texas ("Commission") Docket No. 50734. In the filing, the Company is seeking an increase in distribution revenues of $75,889,531. This equals an approximately $0.88 increase to the average residential customer's bill. This is Oncor's third DCRF filing under a law adopted in 2011 allowing electric utilities to file limited issue, limited review cases.

OCSC has engaged the services of a consultant, Mr. Karl Nalepa, to review the Company's filing. Mr. Nalepa will review the filing and identify adjustments that should be made to the Company's request. We are recommending that cities retaining original jurisdiction deny the requested relief.

The Commission's rules allow cities 60 days to act on this application. That deadline is June 2, 2020. **Accordingly, we request that each city retaining original jurisdiction schedule the draft resolution attached to this memorandum for consideration at their next council meeting.**

If you have any concerns or question please do not hesitate to contact me at (512) 322-5857, tbrocato@lglawfirm.com or Patrick Dinnin at 512-322-5848, pdinnin@lglawfirm.com. We appreciate your continued support.

RESOLUTION NO. _____

RESOLUTION OF THE CITY OF MIDLAND, TEXAS, FINDING THAT THE APPLICATION OF ONCOR ELECTRIC DELIVERY COMPANY, LLC ("ONCOR") FOR APPROVAL TO AMEND ITS DISTRIBUTION COST RECOVERY FACTOR TO INCREASE DISTRIBUTION RATES WITHIN THE CITY SHOULD BE DENIED; AUTHORIZING PARTICIPATION WITH ONCOR CITIES STEERING COMMITTEE; AUTHORIZING THE HIRING OF LEGAL COUNSEL AND CONSULTING SERVICES; FINDING THAT THE CITY'S REASONABLE RATE CASE EXPENSES SHALL BE REIMBURSED BY ONCOR; FINDING THAT THE MEETING AT WHICH THIS RESOLUTION IS PASSED IS OPEN TO THE PUBLIC AS REQUIRED BY LAW; AND AUTHORIZING AND DIRECTING THE CITY SECRETARY TO SEND COPIES OF THIS RESOLUTION TO ONCOR AND LEGAL COUNSEL

WHEREAS, the City of Midland, Texas (the "City") is an electric utility customer of Oncor Electric Delivery Company LLC ("Oncor") and a regulatory authority with an interest in the rates and charges of Oncor; and

WHEREAS, the Oncor Cities Steering Committee ("OCSC") is a coalition of similarly situated cities served by Oncor that have joined together to efficiently and cost effectively review and respond to electric issues affecting rates charged in Oncor's service area in matters before the Public Utility Commission (the "Commission') and the courts; and

WHEREAS, on or about April 3, 2020, Oncor filed with the Commission an Application to Amend its Distribution Cost Recovery Factor ("DCRF"), Commission Docket No. 50734, seeking to increase distribution rates by $75.9 million annually (an approximately $0.88 increase to the average residential customer's bill); and

WHEREAS, the City will cooperate with OCSC in coordinating their review of Oncor's DCRF filing with designated attorneys and consultants, prepare a common response, negotiate with Oncor, and direct any necessary litigation, to resolve issues in Oncor's filing; and

WHEREAS, all electric utility customers residing in the City will be impacted by this ratemaking proceeding if it is granted; and

WHEREAS, working with the OCSC to review the rates charged by Oncor allows members to accomplish more collectively than each city could do acting alone; and

WHEREAS, OCSC's members and attorneys recommend that members deny Oncor's DCRF;

NOW, THEREFORE, BE IT RESOLVED BY THE CITY COUNCIL OF THE CITY OF MIDLAND, TEXAS:

SECTION ONE. That the City is authorized to participate with OCSC in Commission Docket No. 50734.

SECTION TWO. That, subject to the right to terminate employment at any time, the City hereby authorizes the hiring of the law firm of Lloyd Gosselink Rochelle & Townsend, P.C. and consultants to negotiate with Oncor, make recommendations to the City regarding reasonable rates, and to direct any necessary administrative proceedings or court litigation associated with an appeal of Oncor's DCRF application.

SECTION THREE. That the rates proposed by Oncor to be recovered through its DCRF charged to customers located within the City limits are hereby found to be unreasonable and shall be denied.

SECTION FOUR. That Oncor shall continue to charge its existing rates to customers within the City.

SECTION FIVE. That the City's reasonable rate case expenses shall be reimbursed in full by Oncor within 30 days of the adoption of this Resolution.

SECTION SIX. That it is hereby officially found and determined that the meeting at which this Resolution is passed is open to the public as required by law and that the public notice of the time, place, and purpose of said meeting was given as required.

SECTION SEVEN. That the City Secretary is hereby authorized and directed to send copies of this Resolution to Tab Urbantke, Attorney for Oncor, at Hunton Andrews Kurth LLP, 1445 Ross Avenue, Suite 3700, Dallas, Texas 75202, and to Thomas Brocato, General

Counsel to OCSC, at Lloyd Gosselink Rochelle & Townsend, P.C., P.O. Box 1725, Austin, TX 78767-1725, or tbrocato@lglawfirm.com.

On motion of Council member _____, seconded by Council member _____, the above and foregoing resolution was adopted by the City Council of the City of Midland at a regular meeting on the _____ day of _____, A.D., 2020, by the following vote:

Council members voting "AYE":

Council members voting "NAY":

_____
Patrick N. Payton, Mayor

ATTEST:

_____
Amy M. Turner, City Secretary

RECOMMENDED AND APPROVED:

_____
Courtney Sharp, City Manager

APPROVED AS TO CONTENT
AND COMPLETENESS:

_____
Morris Williams, Assistant City Manager

APPROVED ONLY AS TO FORM:

_____
John Ohnemiller, City Attorney

City Council Agenda

Approved for Agenda:
CSharp
City Manager's Office

MEETING DATE: 4/28/2020

TO: City Council / City Manager

FROM: Justine Ruff, Director of Airports

SUBJECT: Consider a resolution authorizing the Mayor, City Manager and City Attorney to execute the Coronavirus Aid, Relief and Economic Security (CARES) Act Grant from the Federal Aviation Administration (FAA) upon receipt.

Purpose:

Consider a resolution authorizing the Mayor, City Manager and City Attorney to execute the Coronavirus Aid, Relief and Economic Security (CARES) Act Grant from the Federal Aviation Administration (FAA) upon receipt.

Recommended City Council Action

☒ Approve ☐ Deny ☐ Directional / Informational

Fiscal Impact:

Estimated Grant Proceeds: $22,935,854

Discussion:

In anticipation of the receipt of the Coronavirus Aid, Relief, and Economic Security (CARES) Act estimated amount of $22.935,854, the Department of Airports is requesting City Council's approval to allow the Mayor, City Manager and the City Attorney to execute this grant agreement upon receipt. These grant proceeds will fund operating costs at MAF for the foreseeable future.

The CARES Act signed into law by the President on March 27, 2020, includes $10 billion in funds to be awarded as economic relief to eligible US Airports affected by the prevention of, preparation for, and response to the COVID-19 pandemic.

The CARES Act provides funds to increase the Federal share to 100 percent for Airport Improvement Program (AIP) and grants already planned for Fiscal Year 2020. MAF has approximately $4.9 million in FY 2020 projects planned, so the FAA will now be paying the 10% match on this project (approximately $490,000).

Additionally, the CARES Act provides new funds distributed by various formulas for all airports that are part of the national airport system, this includes Midland International Air & Space Port and Midland Airpark. These funds can be used for any purpose for which airport revenues may lawfully be used. The funds are generally available for expenditures allowed by the FAA's Policy and Procedures Concerning the Use of Airport Revenue (Revenue-Use Policy).

RESOLUTION NO. _____

RESOLUTION AUTHORIZING THE MAYOR, CITY MANAGER, AND CITY ATTORNEY TO ACCEPT AND EXECUTE THE CORONAVIRUS AID, RELIEF, AND ECONOMIC SECURITY (CARES) ACT GRANT FOR THE DEPARTMENT OF AIRPORTS IN THE AMOUNT OF $22,935,854.00

WHEREAS, the Federal Aviation Administration ("*FAA*") has offered the Department of Airports a grant in the amount of $22,935,854.00 through the Coronavirus Aid Relief, and Economic Security (CARES) Act for the purpose of providing economic relief to eligible United States airports affected by the prevention/preparation for and response to the COVID-19 pandemic; and

WHEREAS, the grant funds shall be used to fund the operating costs at Midland International Air and Space Port and Midland Airpark; and

WHEREAS, the City Council finds it to be in the public interest to accept said grant;

NOW, THEREFORE, BE IT RESOLVED BY THE CITY COUNCIL OF THE CITY OF MIDLAND, TEXAS:

THAT the Mayor, City Manager, and City Attorney are hereby authorized to execute the Coronavirus Aid, Relief, and Economic Security (CARES) Act Grant, which shall be on file in the office of the City Secretary and referenced by the date and number of this Resolution, thereby accepting the estimated amount of $22,935,854.00 in funding.

On motion of Council member _____, seconded by Council member _____, the above and foregoing resolution was adopted by the City Council of the City of Midland at a regular meeting on the _____ day of _____, A.D., 2020, by the following vote:

Council members voting "AYE":

Council members voting "NAY"

_____
Patrick N. Payton, Mayor

ATTEST:

_____
Amy M. Turner, City Secretary

RECOMMENDED AND APPROVED:

_____
Courtney Sharp, City Manager

_____
Jennifer Fung, Interim Director of Finance

APPROVED AS TO CONTENT
AND COMPLETENESS:

_____
Justine Ruff, Director of Airports

APPROVED ONLY AS TO FORM:

_____
John Ohnemiller, City Attorney

City Council Agenda

Approved for Agenda:
CSharp
City Manager's Office

MEETING DATE: 4/28/2020

TO: City Council / City Manager

FROM: Justine Ruff, Director of Airports

SUBJECT: Consider a resolution authorizing the termination of the existence of the Midland Spaceport Development Corporation.

Purpose:

Consider a resolution authorizing the termination of the existence of the Midland Spaceport Development Corporation.

Recommended City Council Action

☒ Approve ☐ Deny ☐ Directional / Informational

Fiscal Impact:

None

Discussion:

The Midland Spaceport Development Corporation (MSDC) was incorporated on October 16, 2013 to allow the Corporation to apply for any grants available for spaceports in the State of Texas. The Corporation received a State Grant in April 2014 for $2,000,000 to provide funding for a Rocket Engine Test Stand Facility, Altitude Chamber Complex and Access Roadway to the Spaceport Facility. Currently, there are no grant funds available, and the audit costs of the MSDC are prohibitive to continuing the corporation. This resolution will terminate the existence of the Midland Spaceport Development Corporation. The current members of the MSDC may continue their interest in the Spaceport by participating on the Midland Spaceport Committee, a sub committee of the Midland Airport Advisory Board.

RESOLUTION NO. _____

RESOLUTION AUTHORIZING THE TERMINATION OF THE EXISTENCE OF THE MIDLAND SPACEPORT DEVELOPMENT CORPORATION (THE "CORPORATION"); AUTHORIZING AND DIRECTING THE MAYOR AND THE CITY SECRETARY TO EXECUTE A CERTIFICATE OF TERMINATION ON BEHALF OF THE CITY OF MIDLAND, TEXAS, IN ACCORDANCE WITH SECTION 501.403 OF THE TEXAS LOCAL GOVERNMENT CODE; AUTHORIZING THE CITY SECRETARY TO DELIVER FOUR ORIGINALS OF THE CORPORATION'S CERTIFICATE OF TERMINATION TO THE TEXAS SECRETARY OF STATE FOR FILING; AUTHORIZING AND DIRECTING THE CITY COMPTROLLER TO PAY A FILING FEE TO THE TEXAS SECRETARY OF STATE; AUTHORIZING AND DIRECTING THE CITY MANAGER OR THE CITY MANAGER'S DESIGNEE TO SIGN ALL DOCUMENTS AND TAKE ALL ACTIONS NECESSARY OR APPROPRIATE TO EFFECT THE TRANSFER OF ALL FUNDS AND PROPERTY OWNED BY THE CORPORATION UPON TERMINATION OF THE CORPORATION TO THE AUTHORIZING UNITS; AND AUTHORIZING AND DIRECTING THE CITY COMPTROLLER TO TRANSFER SAID FUNDS TO THE CITY OF MIDLAND, TEXAS, AND MIDLAND COUNTY

WHEREAS, Section 501.401 of the Texas Local Government Code provides that a corporation's authorizing unit may terminate the existence of a corporation by a written resolution of the authorizing unit's governing body; and

WHEREAS, the City of Midland, Texas, and Midland County are the authorizing units for the Corporation, as evidenced by the resolutions attached hereto as Exhibit A and incorporated herein for all purposes; and

WHEREAS, Section 501.406 of the Texas Local Government Code provides that upon termination of the Corporation, the title to all funds and property owned by the Corporation is transferred to the Corporation's authorizing units, the City of Midland, Texas, and Midland County; and

WHEREAS, funds or property owned by the Corporation, if any, are held in trust by the City of Midland, Texas, for the Corporation; and

WHEREAS, the City Council finds it to be in the public interest to terminate the

Corporation's existence;

NOW, THEREFORE, BE IT RESOLVED BY THE CITY COUNCIL OF THE CITY OF MIDLAND, TEXAS:

SECTION ONE. That the recitals stated above are hereby adopted and incorporated herein for all purposes.

SECTION TWO. That the Corporation's existence shall be terminated.

SECTION THREE. That the Mayor and the City Secretary are authorized and directed to execute a certificate of termination on behalf of the City of Midland, Texas, in accordance with Section 501.403 of the Texas Local Government Code.

SECTION FOUR. That the City Comptroller is hereby authorized and directed to pay to the Texas Secretary of State a fee of $25.00 and any other required fee associated with the filing of the Corporation's certificate of termination with the Texas Secretary of State.

SECTION FIVE. That the City Secretary is hereby authorized and directed to deliver four (4) originals of the Corporation's executed certificate of termination to the Texas Secretary of State for filing and to send notices of termination of the Corporation to any appropriate entity as necessary.

SECTION SIX. That the City Manager, or the City Manager's designee, is hereby authorized and directed to sign all documents and take all actions necessary or appropriate to effect the transfer to the City of Midland, Texas, of all funds and property owned by the Corporation upon the termination of the Corporation and to accept said funds and property on behalf of the City of Midland, Texas.

SECTION SEVEN. That the City Comptroller is hereby authorized and directed to transfer to the City of Midland General Fund (001) all funds and proceeds owned by the Corporation upon the termination of the Corporation.

SECTION EIGHT. That (i) City Manager or the City Manager's designee is hereby authorized and directed to sign all documents and take all actions necessary or appropriate

to effect the transfer to Midland County of all funds and property owed to Midland County upon the termination of the Corporation's existence, and (ii) the City Comptroller is hereby authorized and directed to pay Midland County all funds and proceeds owed to Midland County from the City of Midland General Fund (001).

On motion of Council member _____, seconded by Council member _____, the above and foregoing resolution was adopted by the City Council of the City of Midland at a regular meeting on the _____ day of _____, A.D., 2020, by the following vote:

Council members voting "AYE":

Council members voting "NAY":

_____
Patrick N. Payton, Mayor

ATTEST:

_____
Amy M. Turner, City Secretary

RECOMMENDED AND APPROVED:

_____
Courtney Sharp, City Manager

APPROVED ONLY AS TO FORM:

_____
John Ohnemiller, City Attorney

RESOLUTION

BE IT RESOLVED, That Midland County in accordance with Texas Local Government Code, Title 12, Subtitle C1, Chapter 507, is to create, in cooperation with the City of Midland, a spaceport development corporation for the purposes of development of a project required or suitable for the promotion of a spaceport, related area transportation facilities and related roads, streets, and water and sewer facilities and other related improvements that enhance the spaceport or another item specified by subdivision of Chapter 507.002.

BE IT Resolved that Midland County, in conjunction with the City of Midland, or otherwise, create the corporation in accordance with this Section 507. Further, it is resolved that the County Judge, or his designee, be authorized to negotiate and complete the necessary instruments to effect this formation as soon as practicable.

Randy Prude
Commissioner Precinct 4

Luis Sanchez
Commissioner Precinct 3

Robert R. Donnelly
Commissioner Precinct 2

Jimmy Smith
Commissioner Precinct 1

Michael R. Bradford
Midland County Judge

Exhibit A

RESOLUTION NO. 2013-325

RESOLUTION OF THE CITY OF MIDLAND, TEXAS ESTABLISHING A SPACEPORT DEVELOPMENT CORPORATION AS AUTHORIZED BY CHAPTER 507 OF THE TEXAS LOCAL GOVERNMENT CODE; THE SPACEPORT DEVELOPMENT CORPORATION IS CREATED IN COORDINATION WITH AND IN CONJUNCTION WITH MIDLAND COUNTY, TEXAS; THE SPACEPORT DEVELOPMENT CORPORATION SHALL BE KNOWN AS THE MIDLAND SPACEPORT DEVELOPMENT CORPORATION AND SHALL BE GOVERNED BY CHAPTER 507 OF THE TEXAS LOCAL GOVERNMENT CODE; THE SPACEPORT DEVELOPMENT CORPORATION SHALL BE GOVERNED BY A BOARD OF SEVEN DIRECTORS AND FOUR OF THE DIRECTORS SHALL BE MIDLAND CITY COUNCIL MEMBERS AND THREE OF THE DIRECTORS SHALL BE APPOINTED BY MIDLAND COUNTY, TEXAS; AND APPOINTING FOUR (4) MEMBERS TO THE BOARD OF DIRECTORS

WHEREAS, the City Council finds it to be in the public interest to create a Spaceport Development Corporation, as authorized by Chapter 507 of the Texas Local Government Code;

NOW, THEREFORE, BE IT RESOLVED BY THE CITY COUNCIL OF THE CITY OF MIDLAND, TEXAS:

SECTION ONE. That the Midland City Council in coordination with Midland County, Texas hereby creates a Spaceport Development Corporation as authorized by Chapter 507 of the Texas Local Government Code.

SECTION TWO. That the Spaceport Development Corporation shall be known as the Midland Spaceport Development Corporation.

SECTION THREE. That the Midland Spaceport Development Corporation shall be governed by Chapter 507 of the Texas Local Government Code.

SECTION FOUR. That the Midland Spaceport Development Corporation shall be governed by a board of seven directors. Four of the directors shall be appointed by the Midland City Council and shall be members of the City Council at the time of their appointment. The other three members of the Board of Directors shall be appointed by Midland County, Texas. The term for each director shall be two years and that term shall expire on June 1st of each odd-numbered year.

SECTION FIVE. That the Board of Directors shall elect a presiding officer from among its members. The Board of Directors may provide for the election of other officers.

SECTION SIX. That the Board of Directors of the Midland Spaceport Development Corporation shall meet at least once every three months and at the call of the presiding officer or a majority of the directors.

SECTION SEVEN. That the Midland Spaceport Development Corporation shall be subject to the Texas Open Meetings Act.

SECTION EIGHT. That the Midland City Secretary shall post the agenda of the Midland Spaceport Development Corporation at the Midland City Hall and the Midland County Courthouse and keep the minutes of the Midland Spaceport Development Corporation.

SECTION NINE. That the Midland City Council hereby appoints Jeff Sparks, Jerry Morales, John Love and Michael Trost to the Board of Directors of the Midland Spaceport Development Corporation.

On motion of Council member Dufford, seconded by Council member Love, the above and foregoing resolution was adopted by the City Council of the City of Midland at a regular meeting on the 24th day of September, A.D., 2013, by the following vote:

Council members voting "AYE": Love, Morales, Trost, Perry, Dufford, James, Sparks

Council members voting "NAY": None

W. Wesley Perry, Mayor

ATTEST:

Amy M. Turner, City Secretary

RECOMMENDED AND APPROVED:

Courtney Sharp, City Manager

APPROVED AS TO FORM:

Keith Stretcher, City Attorney

L:\Resolutions\Airport\2013\Spaceport Development Corporation.wpd

City Council Agenda

Approved for Agenda:
CSharp
City Manager's Office

MEETING DATE: 4/28/2020

TO: City Council / City Manager

FROM: Seth Herman,

SUBJECT: Consider a resolution approving the purchase of two-TruNarc drug detection and identification systems at a total cost of $51,506 from sole source provider Thermo Scientific Portable Analytical Instruments Inc., the funds for which are to be derived from the FY2019 HIDTA Grant

---

Purpose:

Consider a resolution approving the purchase of two-TruNarc drug detection and identification systems at a total cost of $51,506 from sole source provider Thermo Scientific Portable Analytical Instruments Inc., the funds for which are to be derived from the FY2019 HIDTA Grant

Recommended City Council Action

☒ Approve ☐ Deny ☐ Directional / Informational

Fiscal Impact:

Total cost of $51,056 derived from FY2019 HIDTA Grant Project (700224-005).

Discussion:

Due to the proliferation of the deadly narcotic Fentanyl and concern for the incursion of the more lethal Carfentanil throughout the Permian Basin, the health and safety of our law enforcement personnel has taken a decidedly challenging turn beyond traditional threats. In order to guard against exposure to these lethal substance and more efficiently identify illicit narcotics, the TruNarc system allows for the detection and identification of unknown materials using the latest spectroscopy elemental isotope analysis.

RESOLUTION NO. _____

RESOLUTION AUTHORIZING THE SOLE-SOURCE PURCHASE OF TWO (2) TRUNARC DRUG DETECTION AND IDENTIFICATION SYSTEMS FOR THE POLICE DEPARTMENT FROM THERMO SCIENTIFIC PORTABLE ANALYTICAL INSTRUMENTS, INC., FOR A TOTAL COST OF $51,506.00

WHEREAS, the City of Midland's Police Department is combating the incursion of fentanyl and carfentanil throughout the Permian Basin, which requires the safe and efficient identification of said narcotics; and

WHEREAS, Thermo Scientific Portable Analytical Instruments, Inc., is the sole-source provider of the TruNarc Drug Detection and Identification System that uses spectroscopy elemental isotope analysis technology for the detection of fentanyl and carfentanil; and

WHEREAS, Thermo Scientific Portable Analytical Instruments, Inc., has agreed to provide the City with two (2) TruNarc Drug Detection and Identification Systems at a total cost of $51,506.00; and

WHEREAS, the TruNarc Drug Detection and Identification System is only available from Thermo Scientific Portable Analytical Instruments, Inc.; and

WHEREAS, the City Council finds the price proposed for said narcotic detection systems to be fair and reasonable; and

WHEREAS, the City Council finds it to be in the public interest to authorize the purchase of said narcotic detection systems from Thermo Scientific Portable Analytical Instruments, Inc.;

NOW, THEREFORE, BE IT RESOLVED BY THE CITY COUNCIL OF THE CITY OF MIDLAND, TEXAS:

SECTION ONE. That the City Manager is hereby authorized and directed to purchase two (2) TruNarc Drug Detection and Identification Systems from Thermo Scientific Portable Analytical Instruments, Inc., for the Police Department for a total cost of

$51,506.00.

SECTION TWO. That the City Comptroller is hereby authorized and directed to pay Thermo Scientific Portable Analytical Instruments, Inc., $51,506.00 from funds available in the FY2019 HIDTA Grant Project upon proper receipt of invoices or statements approved by the City Manager.

On motion of Council member _____, seconded by Council member _____, the above and foregoing resolution was adopted by the City Council of the City of Midland at a regular meeting on the _____ day of _____, A.D., 2020, by the following vote:

Council members voting "AYE":

Council members voting "NAY":

_____
Patrick N. Payton, Mayor

ATTEST:

_____
Amy M. Turner, City Secretary

RECOMMENDED AND APPROVED:

_____
Courtney Sharp, City Manager

APPROVED AS TO CONTENT
AND COMPLETENESS:

_____
Regina Stephenson, General Services Director

APPROVED ONLY AS TO FORM:

_____
John Ohnemiller, City Attorney

Sales Quotation

Quote Number	Created Date	Exp. Delivery Terms	Page
00205598	03/09/2020	ARO	1 / 7
Contact:	**Phone**	**Payment Term**	**Valid To**
Scott Fitzpatrick	(979) 777-2874	Net 30	10/14/2020
Inco Terms		**Shipping Method**	
FOB Origin - Tewksbury		Fed Ex 2nd Day	

Thermo Scientific Portable Analytical Instruments Inc.
2 Radcliff Rd
Tewksbury, Massachusetts 01876
United States

Submitted To:

Stacy Garrison
West Texas HIDTA
660 S Mesa Hills Suite 1060
El Paso, Texas 79912
United States

Phone:
Email: stacy.l.garrison@usdoj.gov

THANK YOU FOR YOUR INTEREST IN THERMO SCIENTIFIC INSTRUMENTATION

To Place an Order:
Contact: Scott Fitzpatrick
Phone: (979) 693-0050
Fax:
Email: scott.fitzpatrick@thermofisher.com
Additional instructions, terms & conditions on last page

Pos.	Product Code	Product Name	Sales Price	Quantity	Total Price
1.00	800-01041-01	TruNarc, Unlimited, Warranty - 1 Yr, Train-12	USD 25,200.00	2.00	USD 50,400.00
		TruNarc Unlimited Model with 1 year of warranty. Includes factory repair, loaner units when available and 24/7 technical support. Companion PC TruNarc admin software, unlimited access to TruNarc eLearning course and free basic software updates to core narcotics library are provided for the life of the instrument. Includes TruNarc on-site instructor led training for up to 12 students within the Continental United States (CONUS) - expires 9 months after date of purchase.			
2.00	810-01462-01	TruNarc Solution Kit (Type H) - 100, English	USD 553.00	2.00	USD 1,106.00
		TruNarc Solution Kit (Type H) for identification of Heroin and other special narcotics. Kit includes 100 Test Sticks and 100 Solution Vials with Ethanol. Note that because of the Ethanol, this product ships as a Hazardous Goods shipment. The shelf life for Type H-sticks is approximately one year from shipment.			
				Total:	USD 51,506.00

Excludes Taxes and Import Fees

Fully Insured 2nd Day Federal Express delivery in U.S., Canada, and Puerto Rico

When applicable, commodities, technology, or software to be provided in furtherance of this order shall be exported from the United States in accordance with applicable U.S export laws or regulations. Diversion contrary to US law prohibited. Unless otherwise agreed to in writing, Thermo Scientific Portable Analytical Instruments Inc. terms and conditions shall apply and take precedence.

Important Note: Please issue POs to Thermo Scientific Portable Analytical Instruments Inc

Federal Tax ID No.: 01-0650031

CAGE CODE: 392A9

DUNS #: 11-289-3131

Bank of America ABA# for Wire Payments: 026 009 593

Bank of America ABA# for ACH Payments: 111 000 012

Beneficiary Account Number: 4426843850

When applicable, commodities, technology, or software to be provided in furtherance of this order shall be exported from the United States in accordance with applicable U.S export laws or regulations. Diversion contrary to US law prohibited. Unless otherwise agreed to in writing, Thermo Scientific Portable Analytical Instruments Inc. terms and conditions shall apply and take precedence.

Acceptance of Purchase

Quote: SF-00205598

By signing below, you (i) warrant that you are an authorized representative of your company, (ii) agree that the Thermo Scientific Portable Analytical Instruments Inc. Terms and Conditions of Sale attached hereto (the "Terms and Conditions") shall supersede any preprinted terms and conditions, in their entirety, contained in any purchase order that your company issues and (iii) the Terms and Conditions shall exclusively govern the transaction(s) contemplated hereby

Signature of authorized company representative	Date	Phone#
Print Name	Title	Email
Model #	Amount + S&H	Purchase Order Number

E-mail to: pai.sales.ops@thermofisher.com **Fax to: 1-877-680-2568**

Order Processing Address:
scott.fitzpatrick@thermofisher.com
Thermo Scientific Portable Analytical Instruments Inc
2 Radcliff Road
Tewksbury, MA 01876

Remit check Payment To:
Thermo Scientific Portable Analytical Instruments Inc
PO Box 415918
Boston, MA 02241-415918

Payment Details

Method of Payment

- ☐ Net 30 (Attach Credit Application & Credit References)
- ☐ Credit Card
- ☐ Check
- ☐ Wire Transfer

Sales Tax Application

- ☐ Yes Apply Sales Tax
- ☐ No

- If no, you must provide a copy of your tax exemption certificate along with your purchase order.

****Please contact your customer service representative with your credit card information. (Do not send any credit card info via email or fax.)****

Address Verification

Please make corrections if necessary below:

Bill to:
660 S Mesa Hills Suite 1060
El Paso, Texas 79912
United States

Ship to:
660 S Mesa Hills Suite 1060
El Paso, Texas 79912
United States

Additional Options / Accessories

Please use the space below to note any additional options and/or accessories you wish to add from the attached sheets that are not included in the above quotation.

_____

_____

_____

_____

When applicable, commodities, technology, or software to be provided in furtherance of this order shall be exported from the United States in accordance with applicable U.S export laws or regulations. Diversion contrary to US law prohibited. Unless otherwise agreed to in writing, Thermo Scientific Portable Analytical Instruments Inc. terms and conditions shall apply and take precedence.

THERMO SCIENTIFIC PORTABLE ANALYTICAL INSTRUMENTS INC – TERMS AND CONDITIONS OF SALE

Last revised November 2019

UNLESS OTHERWISE EXPRESSLY AGREED IN WRITING, ALL SALES ARE SUBJECT TO THE FOLLOWING TERMS AND CONDITIONS:

1. GENERAL. Thermo Scientific Portable Analytical Instruments Inc ("Seller") hereby offers for sale to the buyer named on the face hereof ("Buyer") the products listed on the face hereof (the "Products") on the express condition that Buyer agrees to accept and be bound by the terms and conditions set forth herein. Any provisions contained in any document issued by Buyer are expressly rejected and if the terms and conditions in this agreement (the "Agreement") differ from the terms of Buyer's offer, this document shall be construed as a counter offer and shall not be effective as an acceptance of Buyer's document. Buyer's receipt of Products or Seller's commencement of the services provided hereunder will constitute Buyer's acceptance of this Agreement. This is the complete and exclusive statement of the contract between Seller and Buyer with respect to Buyer's purchase of the Products. No waiver, consent, modification, amendment or change of the terms contained herein shall be binding unless in writing and signed by Seller and Buyer. Seller's failure to object to terms contained in any subsequent communication from Buyer will not be a waiver or modification of the terms set forth herein. All orders are subject to acceptance in writing by an authorized representative of Seller.

2. PRICE. All prices published by Seller or quoted by Seller's representatives may be changed at any time without notice. All prices quoted by Seller or Seller's representatives are valid for thirty (30) days, unless otherwise stated in writing. All prices for the Products will be as specified by Seller or, if no price has been specified or quoted, will be Seller's price in effect at the time of shipment. All prices are subject to adjustment on account of specifications, quantities, raw materials, cost of production, shipment arrangements or other terms or conditions, which are not part of Seller's original price quotation.

3. TAXES AND OTHER CHARGES. Prices for the Products exclude all sales, value added and other taxes and duties imposed with respect to the sale, delivery, or use of any Products covered hereby, all of which taxes and duties must be paid by Buyer. If Buyer claims any exemption, Buyer must provide a valid, signed certificate or letter of exemption for each respective jurisdiction. Buyer shall be solely responsible for obtaining any and all necessary licenses, registrations, certificates, permits, approvals or other authorizations required by federal, state or local statute, law or regulation pertaining to the use or possession of the products contemplated herein that include radioactive isotopes, or x-ray tubes if any.

Buyer shall pay Seller such surcharges, or other fees, in respect of the sale of Products hereunder as Seller deems necessary and appropriate (in Seller's sole, good-faith, reasonable discretion) to account for changes in the cost to product, develop, market, or sell the Products to Buyer hereunder (whether as the result of the imposition of tariffs or otherwise). All such surcharges must be paid by Buyer in accordance with the payment terms set forth herein. Buyer agrees that such surcharges, or other fees, or any termination thereof, shall take effect immediately upon written notice thereof by Seller to Buyer. In the event that Seller's quote and/or order acknowledgement set forth surcharges, those documents shall be considered adequate written notice to Buyer that said surcharges are Buyer's responsibility. Any such surcharges shall not constitute an increase in the Price(s) of any Products or Services sold under this Agreement

4. TERMS OF PAYMENT. Seller may invoice Buyer upon shipment for the price and all other charges payable by Buyer in accordance with the terms on the face hereof. If no payment terms are stated on the face hereof, payment shall be net thirty (30) days from the date of invoice. If Buyer fails to pay any amounts when due, Buyer shall pay Seller interest thereon at a periodic rate of one and one-half percent (1.5%) per month (or, if lower, the highest rate permitted by law), together with all costs and expenses (including without limitation reasonable attorneys' fees and disbursements and court costs) incurred by Seller in collecting such overdue amounts or otherwise enforcing Seller's rights hereunder. Seller reserves the right to require from Buyer full or partial payment in advance, or other security that is satisfactory to Seller, at any time that Seller believes in good faith that Buyer's financial condition does not justify the terms of payment specified. All payments shall be made in U.S. Dollars.

5. DELIVERY CANCELLATION OR CHANGES BY BUYER. The Products will be shipped to the destination specified by Buyer, F.O.B. shipping point. Seller will have the right, at its election, to make partial shipments of the Products and to invoice each shipment separately. Seller reserves the right to stop delivery of Products in transit and to withhold shipments in whole or in part if Buyer fails to make any payment to Seller when due or otherwise fails to perform its obligations hereunder. All shipping dates are approximate only, and Seller will not be liable for any loss or damage resulting from any delay in delivery or failure to deliver which is due to any cause beyond Seller's reasonable control. In the event of a delay due to any cause beyond Seller's reasonable control, Seller reserves the right to terminate the order or to reschedule the shipment within a reasonable period of time, and Buyer will not be entitled to refuse delivery or otherwise be relieved of any obligations as the result of such delay. Products as to which delivery is delayed due to any cause within Buyer's control may be placed in storage by Seller at Buyer's risk and expense and for Buyer's account. Orders in process may be canceled only with Seller's written consent and upon payment of Seller's cancellation charges. Orders in process may not be changed except with Seller's written consent and upon agreement by the parties as an appropriate adjustment in the purchase price therefor. Credit will not be allowed for Products returned without prior written consent of seller.

6. RETURN OF PRODUCTS/RESTOCKING CHARGE. Buyer must obtain permission from Seller prior to returning Products. The request must be received within ten (10) days of receipt of the Products. Older items, service parts, and discontinued items cannot be returned for credit. In order to obtain a RMA number, Buyer must contact Seller's customer support. Seller, in its discretion, may impose a twenty (20%) percent restocking charge of the price paid for any item authorized for return for credit

7. TITLE AND RISK OF LOSS. Notwithstanding the trade terms indicated above and subject to Seller's right to stop delivery of Products in transit, title to and risk of loss of the Products will pass to Buyer upon delivery of possession of the Products by Seller to the carrier irrespective of which Party's carrier is used for the transport or the manner of payment ascribed to the transport; provided, however, that title to any software incorporated within or forming a part of the Products shall at all times remain with Seller or the licensor(s) thereof, as the case may be.

8. WARRANTY. Seller warrants that the Products will operate or perform substantially in conformance with Seller's published specifications and be free from defects in material and workmanship, when subjected to normal, proper and intended usage by properly trained personnel, for the period of time set forth in the product documentation, published specifications or package inserts. If a period of time is not specified in Seller's product documentation, published specifications or package inserts, the warranty period shall be one (1) year from the date of shipment to Buyer for equipment and ninety (90) days for all other products (the "Warranty Period"). During the Warranty Period, Seller agrees, in its sole discretion, to repair or replace, Products and/or provide additional parts or services as reasonably necessary to cause the same to perform in substantial conformance with said published specifications; provided that Buyer shall (a) promptly notify Seller in writing upon the discovery of any defect, which notice shall include the product model and serial number (if applicable) and details of the warranty claim; and (b) after Seller's review, Seller will provide Buyer with service data and /or a Return Material Authorization ("RMA), which may include biohazard decontamination procedures and other product-specific handling instructions, then, if applicable, Buyer may return the defective Products to Seller with all costs prepaid by Buyer. Replacement parts may be new or refurbished, at the election of Seller. All replaced parts shall become

the property of Seller. Shipment to Buyer of repaired or replacement Products shall be made in accordance with the Delivery provisions of the Seller's Terms and Conditions of Sale. Consumables are expressly excluded from this warranty. If Seller elects to repair defective device instruments, Seller may, in its sole discretion, provide a replacement loaner instrument to Buyer as necessary for use while the instruments are being repaired. Notwithstanding the foregoing, Products supplied by Seller that are obtained by Seller from an original manufacturer or third party supplier are not warranted by Seller, but Seller agrees to assign to Buyer any warranty rights in such Product that Seller may have from the original manufacturer or third party supplier, to the extent such assignment is allowed by such original manufacturer or third party supplier. In no event shall Seller have any obligation to make repairs, replacements or corrections required, in whole or in part, as the result of (i) normal wear and tear, (ii) accident, disaster or event of force majeure, (iii) misuse, fault or negligence of or by Buyer, (iv) use of the Products in a manner for which they were not designed, (v) causes external to the Products such as, but not limited to, power failure or electrical power surges, (vi) improper storage and handling of the Products or (vii) use of the Products in combination with equipment or software not supplied by Seller. If Seller determines that Products for which Buyer has requested warranty services are not covered by the warranty hereunder, Buyer shall pay or reimburse Seller for all costs of investigating and responding to such request at Seller's then prevailing time and materials rates. If Seller provides repair services or replacement parts that are not covered by this Warranty shall pay Seller therefor at Seller's then prevailing time and materials rates.

ANY INSTALLATION, MAINTENANCE, REPAIR, SERVICE, RELOCATION OR ALTERATION TO OR OF, OR OTHER TAMPERING WITH, THE PRODUCTS PERFORMED BY ANY PERSON OR ENTITY OTHER THAN SELLER WITHOUT SELLER'S PRIOR WRITTEN APPROVAL, OR ANY USE OF REPLACEMENT PARTS NOT SUPPLIED BY SELLER, SHALL IMMEDIATELY VOID AND CANCEL ALL WARRANTIES WITH RESPECT TO THE AFFECTED PRODUCTS. THE OBLIGATIONS CREATED BY THIS WARRANTY STATEMENT TO REPAIR OR REPLACE A DEFECTIVE PRODUCT SHALL BE THE SOLE REMEDY OF BUYER IN THE EVENT OF A DEFECTIVE PRODUCT. EXCEPT AS EXPRESSLY PROVIDED IN THIS WARRANTY STATEMENT, SELLER DISCLAIMS ALL OTHER WARRANTIES, WHETHER EXPRESS OR IMPLIED, ORAL OR WRITTEN, WITH RESPECT TO THE PRODUCTS, INCLUDING WITHOUT LIMITATION ALL IMPLIED WARRANTIES OF MERCHANTABILITY OR FITNESS FOR ANY PARTICULAR PURPOSE. SELLER DOES NOT WARRANT THAT THE PRODUCTS ARE ERROR-FREE OR WILL ACCOMPLISH ANY PARTICULAR RESULT.

9. INDEMNIFICATION

9.1. By Seller. Seller agrees to indemnify, defend and save Buyer, its officer, directors, and employees from and against any and all damages, liabilities, actions, causes of action, suits, claims, demands, losses, costs and expenses (including without limitation reasonable attorney's fees) ("Indemnified Items") for (i) injury to or death of persons or damage to property to the extent caused by the negligence or willful misconduct of Seller, its employees, agents or representatives or contractors in connection with the performance of services at Buyer's premises under this Agreement and (ii) claims that a Product infringes any valid United States patent, copyright or trade secret; provided, however, Seller shall have no liability under this Section to the extent any such Indemnified Items are caused by either (i) the negligence or willful misconduct of Buyer, its employees, agents or representatives or contractors, (ii) by any third party, (iii) use of a Product in combination with equipment or software not supplied by Seller where the Product would not itself be infringing, (iv) compliance with Buyer's designs, specifications or instructions, (v) use of the Product in an application or environment for which it was not designed or (vi) modifications of the Product by anyone other than Seller without Seller's prior written approval. Buyer shall provide Seller prompt written notice of any third party claim covered by Seller's indemnification obligations hereunder. Seller shall have the right to assume exclusive control of the defense of such claim or, at the option of the Seller, to settle the same. Buyer agrees to cooperate reasonably with Seller in connection with the performance by Seller of its obligations in this Section.

Notwithstanding the above, Seller's infringement related indemnification obligations shall be extinguished and relieved if Seller, at its discretion and at its own expense (a) procures for Buyer the right, at no additional expense to Buyer, to continue using the Product; (b) replaces or modifies the Product so that it becomes non-infringing, provided the modification or replacement does not adversely affect the specifications of the Product; or (c) in the event(a) and (b) are not practical, refund to Buyer the amortized amounts paid by Buyer with respect thereto, based on a five (5) year amortization schedule. THE FOREGOING INDEMNIFICATION PROVISION STATES SELLER'S ENTIRE LIABILITY TO BUYER FOR THE CLAIMS DESCRIBED HEREIN.

9.2. By Buyer. Buyer shall indemnify, defend with competent and experienced counsel and hold harmless Seller, its parent, subsidiaries, affiliates and divisions, and their respective officers, directors, shareholders and employees, from and against any and all damages, liabilities, actions, causes of action, suits, claims, demands, losses, costs and expenses (including without limitation reasonable attorneys' fees and disbursements and court costs) to the extent arising from or in connection with (i) the negligence or willful misconduct of Buyer, its agents, employees, representatives or contractors; (ii) use of a Product in combination with equipment or software not supplied by Seller where the Product itself would not be infringing; (iii) Seller's compliance with designs, specifications or instructions supplied to Seller by Buyer; (iv) use of a Product in an application or environment for which it was not designed; or (v) modifications of a Product by anyone other than Seller without Seller's prior written approval

10. SOFTWARE. With respect to any software products incorporated in or forming a part of the Products hereunder, Seller and Buyer intend and agree that such software products are being licensed and not sold, and that the words "purchase", "sell" or similar or derivative words are understood and agreed to mean "license", and that the word "Buyer" or similar or derivative words are understood and agreed to mean "licensee". Notwithstanding anything to the contrary contained herein, Seller or its licensor, as the case may be, retains all rights and interest in software products provided hereunder. Seller hereby grants to Buyer a royalty-free, non-exclusive, nontransferable license, without power to sublicense, to use software provided hereunder solely for Buyer's own internal business purposes on the hardware products provided hereunder and to use the related documentation solely for Buyer's own internal business purposes. This license terminates when Buyer's lawful possession of the hardware products provided hereunder ceases, unless earlier terminated as provided herein. Buyer agrees to hold in confidence and not to sell, transfer, license, loan or otherwise make available in any form to third parties the software products and related documentation provided hereunder. Buyer may not disassemble, decompile or reverse engineer, copy, modify, enhance or otherwise change or supplement the software products provided hereunder without Seller's prior written consent. Seller will be entitled to terminate this license if Buyer fails to comply with any term or condition herein. Buyer agrees, upon termination of this license, immediately to return to Seller all software products and related documentation provided hereunder and all copies and portions thereof

11. LIMITATION OF LIABILITY. NOTWITHSTANDING ANYTHING TO THE CONTRARY CONTAINED HEREIN, THE LIABILITY OF SELLER UNDER THESE TERMS AND CONDITIONS (WHETHER BY REASON OF BREACH OF CONTRACT, TORT, INDEMNIFICATION, OR OTHERWISE, BUT EXCLUDING LIABILITY OF SELLER FOR BREACH OF WARRANTY (THE SOLE REMEDY FOR WHICH SHALL BE AS PROVIDED UNDER SECTION 8 ABOVE)) SHALL NOT EXCEED AN AMOUNT EQUAL TO THE LESSER OF (A) THE TOTAL PURCHASE PRICE THERETOFORE PAID BY BUYER TO SELLER WITH RESPECT TO THE PRODUCT(S) GIVING RISE TO SUCH LIABILITY OR (B)

ONE MILLION DOLLARS ($1,000,000). NOTWITHSTANDING ANYTHING TO THE CONTRARY CONTAINED HEREIN, IN NO EVENT SHALL SELLER BE LIABLE FOR ANY INDIRECT, SPECIAL, CONSEQUENTIAL OR INCIDENTAL DAMAGES (INCLUDING WITHOUT LIMITATION DAMAGES FOR LOSS OF USE OF FACILITIES OR EQUIPMENT, LOSS OF REVENUE, LOSS OF DATA, LOSS OF PROFITS OR LOSS OF GOODWILL), REGARDLESS OF WHETHER SELLER (a) HAS BEEN INFORMED OF THE POSSIBILITY OF SUCH DAMAGES OR (b) IS NEGLIGENT

12. EXPORT RESTRICTIONS. Buyer acknowledges that each Product and any related software and technology, including technical information supplied by Seller or contained in documents (collectively "Items"), is subject to export controls of the U.S. government. The export controls may include, but are not limited to, those of the Export Administration Regulations of the U.S. Department of Commerce (the "EAR"), which may restrict or require licenses for the export of Items from the United States and their re-export from other countries. Buyer shall comply with the EAR and all other applicable laws, regulations, laws, treaties, and agreements relating to the export, re-export, and import of any Item. Buyer shall not, without first obtaining the required license to do so from the appropriate U.S. government agency; (i) export or re-export any Item, or (ii) export, re-export, distribute or supply any Item to any restricted or embargoed country or to a person or entity whose privilege to participate in exports has been denied or restricted by the U.S. government. Buyer shall, if requested by Seller, provide information on the end user and end use of any Item exported by the Buyer or to be exported by the Buyer. Buyer shall cooperate fully with Seller in any official or unofficial audit or inspection related to applicable export or import control laws or regulations, and shall indemnify and hold Seller harmless from, or in connection with, any violation of this Section by Buyer or its employees, consultants, or agents

13. HAZARDOUS MATERIALS. Some Products may require special packaging, labeling, marking and handling. Carriers may add additional freight charges for the handling or transporting of these materials. The consolidating of such material with other Products may be prohibited. Additional freight charges will be billed per Seller's shipping terms. Be sure to advise Seller of shipping instructions for these hazardous materials to reduce your freight costs

14. MISCELLANEOUS. (a) Buyer may not delegate any duties nor assign any rights or claims hereunder without Seller's prior written consent, and any such attempted delegation or assignment shall be void. (b) The rights and obligations of the parties hereunder shall be governed by and construed in accordance with the laws of the State of Seller's manufacturing location, without reference to its choice of law provisions. Each party hereby irrevocably consents to the exclusive jurisdiction of the state and federal courts located in the county and state of Seller's manufacturing location, in any action arising out of or relating to this Agreement. (c) Both parties waive any right they may have under applicable law or otherwise to a right to a trial by jury. Any action arising under this Agreement must be brought within one (1) year from the date that the cause of action arose. (d) The application to this Agreement of the U.N. Convention on Contracts for the International Sale of Goods is hereby expressly excluded. (e) In the event that any one or more provisions contained herein shall be held by a court of competent jurisdiction to be invalid, illegal or unenforceable in any respect, the validity, legality and enforceability of the remaining provisions contained herein shall remain in full force and effect, unless the revision materially changes the bargain. (f) Seller's failure to enforce, or Seller's waiver of a breach of, any provision contained herein shall not constitute a waiver of any other breach or of such provision. (g) Unless otherwise expressly stated on the Product or in the documentation accompanying the Product, the Product is intended for non-clinical, non-diagnostic, non-therapeutic use only and is not to be used for any other purpose, including without limitation, unauthorized commercial uses, in vitro diagnostic uses, ex vivo or in vivo therapeutic uses, or any type of consumption by or application to humans or animals. (h) Buyer agrees that all pricing, discounts and technical information that Seller provides to Buyer are the confidential and proprietary information of Seller. Buyer agrees to (1) keep such information confidential and not disclose such information to any third party, and (2) use such information solely for Buyer's internal purposes and in connection with the Products supplied hereunder. Nothing herein shall restrict the use of information available to the general public. (i) Any notice or communication required or permitted hereunder shall be in writing and shall be deemed received when personally delivered or three (3) business days after being sent by certified mail, postage prepaid, to a party at the address specified herein or at such other address as either party may from time to time designate to the other (j) Seller hereby rejects and disclaims any rights of Buyer contained, or obligations imposed upon Seller, in any document provided, referenced or otherwise submitted by Buyer, in each case, that Seller has not expressly included in these [terms and conditions] or a writing manually executed by Seller (including, without limitation, any rights of Buyer in respect of designs, specifications, source code or intellectual property, owned, created, developed or licensed, by Seller; any rights to items or services not specifically identified in Seller's quotation; any audit rights or financial offset rights of Buyer; any penalties or liquidated damages imposed upon Seller; any obligation by Seller to comply with Health Insurance Portability and Accountability Act of 1996 (as amended), Current Good Manufacturing Practice regulations (as amended), the requirements, as amended, of the Customs-Trade Partnership Against Terrorism or any code of conduct, quality program, information security program, background or drug screening program or other guidelines, programs or policies, in each case, promulgated or required by Buyer; any obligation that Seller comply with any law that, under law, would not otherwise apply to Seller in respect of the transaction(s) contemplated hereby; any right of Buyer to withhold all, or any portion, of the purchase price of any products or services provided hereunder for any period of time; any right of Buyer, itself or through any third party, to remediate any defects in, replace or re-perform, any products or services provided hereunder at Seller's cost or expense; any obligation of Seller to waive, or require its insurers to waive, any rights of subrogation; any obligation of Seller that would impair, restrict or prohibit Seller's ability to freely conduct any business with any person or in any geography or market; any early-payment, or other, discount; any obligation of Seller to maintain a supply of spares, or otherwise make any services available, for any particular period of time; any representation, warranty or other obligation of Seller to provide pricing comparable to, or more favorable than, the pricing that Seller provides to others; any restriction of, or prohibition on, Seller's ability to modify, change or discontinue any of its products, processes or services; or any waiver by Seller of any right to enforce any of the terms hereof).

15. SOFTWARE-AS-A-SERVICE TRANSACTIONS. IF YOU ARE PURCHASING ANY PRODUCTS PROVIDED BY SELLER HEREUNDER AND DESCRIBED IN THE RELEVANT QUOTATION OR PURCHASE ORDER AS A SUBSCRIPTION TO ANY THERMO FISHER SOFTWARE-AS-A-SERVICE OFFERING (ANY SUCH PRODUCT, HEREINAFTER, A "SUBSCRIPTION"),THEN IN RESPECT OF SUCH SUBSCRIPTION(S) ONLY

(a) The following terms and conditions of this Agreement shall not apply: Sections 6-7, 9.1, and 13.

(b) The following terms and conditions of this Agreement shall be modified as set forth below:

(i) Section 5 shall be replaced in its entirety with the following:

5. CANCELLATION OR CHANGES BY BUYER. Seller reserves the right to suspend or terminate the Buyer's Subscription(s), in whole or in part, if Buyer fails to make any payment to Seller when due, otherwise fails to perform its obligations hereunder, or fails to comply with the Seller's Terms of Use agreement agreed to by Buyer and governing Buyer's use of the Subscription(s), as in effect from time to time (the "Terms of Use"). Seller will not be liable for any loss or damage resulting from any delay in activation of the Subscription(s) or failure to activate the Subscription(s) which is due to any cause beyond Seller's reasonable control. In the event of a delay due to any cause beyond Seller's reasonable control, Seller reserves the right to terminate the order or to reschedule the activation of the Subscription(s) within a reasonable period of time, and Buyer will not be entitled to refuse payment or otherwise be relieved of any obligations as the result of such delay. Orders in process may be canceled only with Seller's written consent and up

payment of Seller's cancellation charges. Orders in process may not be changed except with Seller's written consent and upon agreement by the parties as an appropriate adjustment in the purchase price therefor.

(ii) Section 8 shall be replaced in its entirety with the following:

8. WARRANTY. BUYER AGREES AND ACKNOWLEDGES THAT THE SUBSCRIPTIONS ARE SOLD "AS-IS", WITH NO WARRANTIES EXPRESSED OR IMPLIED. SELLER DISCLAIMS ALL EXPRESS OR IMPLIED WARRANTIES, ORAL OR WRITTEN, WITH RESPECT TO THE SUBSCRIPTIONS, INCLUDING WITHOUT LIMITATION ALL IMPLIED WARRANTIES OF MERCHANTABILITY OR FITNESS FOR ANY PARTICULAR PURPOSE.

(iii) Section 10 shall be replaced in its entirety with the following:

10. SOFTWARE. This Agreement shall not be construed to grant to Buyer any patent license, know-how license or any other rights except as specifically provided herein. Buyer agrees and acknowledges that, by virtue of its purchase of the Subscriptions hereunder, it does not acquire any intellectual property rights (whether by license, assignment, or otherwise) of Seller, including without limitation any rights to the Subscriptions or related software or hardware systems (except for the limited right to use the Subscription subject to the terms and conditions set forth herein). Buyer shall not reverse engineer or copy the design, algorithms, or code, or any components thereof, of any information related to the Subscriptions for any purpose.

(iv) In Section 11, the language "ONE MILLION DOLLARS ($1,000,000)" shall be replaced with "TEN THOUSAND DOLLARS ($10,000)".

(c) The following additional terms and conditions shall apply

TERMS OF USE. Buyer hereby acknowledges and agrees that it shall comply with all terms and conditions of the Terms of Use, and that Buyer's use of the Subscription in violation of any such terms and/or conditions shall entitle Seller, without prejudice to any other remedies that may be available to Seller at law or in equity, to terminate Buyer's use of the Subscription(s) effective immediately. Buyer further agrees and acknowledges that it shall not be entitled to any refund of any portion of the purchase price paid in respect of Subscription(s) cancelled by Seller pursuant to Seller's rights under this Section and/or the Terms of Use. Buyer's rights to use these Subscription will begin upon Seller's transmission to Buyer of Subscription link and end 12 months from this date unless otherwise terminated by Seller. In the event of any conflict between this Agreement and the Terms of Use, the Terms of Use shall control.

ThermoFisher
SCIENTIFIC
The world leader
in serving science

April 5, 2020

To Whom It May Concern:

ThermoFisher Scientific is sole source for the Thermo Scientific Gemini, TruNarc, FirstDefender RMX/RM and TruDefender FTX for the State of Texas. This includes any and all upgrades or trade in offers. These product lines were previously sold under the Ahura Scientific brand name.

We do not have any resellers that can respond to any solicitations. Any bid responses or Request For Quotations that submitted that are non-ThermoFisher Scientific will not be honored as none have any agreements that state otherwise.

If you have any further questions, please do not hesitate to contact me at 979.777.2874. Thank you and stay safe.

Sincerely,

Scott Fitzpatrick
Safety and Security Specialist
Cell: 979.777.2874

Thermo Scientific (formerly Ahura Scientific)
Portable Analytical Instruments
www.thermo.com/ahura
scott.fitzpatrick@thermo.com

City Council Agenda

Approved for Agenda:
rwpatrick
City Manager's Office

MEETING DATE: 4/28/2020

TO: City Council / City Manager

FROM: Carl Craigo,

SUBJECT: Consider a motion authorizing the execution of a Surface Use Agreement with HEP Fin-Tex/Trust River, L.P., regarding City-owned property described as Lot 2A, Block 11, Midland International Airport Industrial Park Addition, Lots 3B, 4B, 4C, and 5B, Block 11, Midland International Airport Industrial Park Addition 6, and Lots 11A and 12A, Block 10, Midland International Airport Industrial Park Addition 7, City and County of Midland, Texas.

Purpose:

Consider a motion authorizing the execution of a Surface Use Agreement with HEP Fin-Tex/Trust River, L.P., regarding City-owned property described as Lot 2A, Block 11, Midland International Airport Industrial Park Addition, Lots 3B, 4B, 4C, and 5B, Block 11, Midland International Airport Industrial Park Addition 6, and Lots 11A and 12A, Block 10, Midland International Airport Industrial Park Addition 7, City and County of Midland, Texas.

Recommended City Council Action

☒ Approve ☐ Deny ☐ Directional / Informational

Fiscal Impact:

Annual Fee Collected Fee FAA regulated and other Parcels: $15,936

Discussion:

This SUA allows HEP FIN-TEX/TRUST River, L.P. drill or maintain new/existing monitoring wells, recovery wells, air sparge wells, and other remediation wells and install and/or maintain a dual-phase extraction system. The purposes of the systems is to track a spill of gasoline and diesel from Operator's pipeline that occurred in September 2009, treating affected groundwater, recovering hydrocarbons.

EXECUTION VERSION

SURFACE USE AGREEMENT

THIS SURFACE USE AGREEMENT (this "Agreement") is made and entered into this ____ day of _____, 2020, by and between the **CITY OF MIDLAND, TEXAS**, a home rule municipal corporation, whose address is 300 N. Loraine, Midland, Texas 79701 ("City"), and **HEP FIN-TEX/TRUST RIVER, L.P.**, a Texas limited partnership, whose address is 2828 N. Harwood, Suite 1300, Dallas, Texas 75201 ("Operator").

WHEREAS, City owns the surface of property located outside the corporate limits of the City of Midland, Texas, being Lot 2A, Block 11, Midland International Airport Industrial Park Addition to the City of Midland, and Lots 3B, 4B, 4C, and 5B, Block 11, Midland International Airport Industrial Park Addition 6 to the City of Midland, and Lots 11A and 12A, Block 10, Midland International Airport Industrial Park Addition 7 to the City of Midland, Midland County, Texas, and being more particularly depicted in **Exhibit A** attached hereto and incorporated herein for all purposes (hereafter referred to as the "Surface Premises"); and

WHEREAS, City and Operator desire to enter into an agreement for the purpose of Operator drilling and/or maintaining monitoring wells, recovery wells, air sparge wells, and other remediation wells (hereafter collectively referred to as the "Wells") and to install and/or maintain a dual-phase extraction system, in-well integrated remediation systems, air sparge system, air compressors, a lockable storage shed and other associated equipment, sensors, structures and facilities (hereafter collectively referred to as the "Associated Facilities") for the purposes of tracking a spill of gasoline and diesel fuel from Operator's pipeline that occurred in September, 2009 (the "Spill"), treating affected groundwater, recovering hydrocarbons and/or affected groundwater from the subsurface, and housing certain Associated Facilities, and to further have the right of ingress and egress at certain points for such purpose; and

WHEREAS, Operator's Wells and treatment and recovery efforts related to the Spill have been in place since 2010 pursuant to a prior agreement with City.

NOW, THEREFORE, in consideration of the premises and the covenants set forth below, City and Operator agree as follows:

1. GRANT OF RIGHT TO USE SURFACE PREMISES:

(a) City hereby grants to Operator the non-exclusive right to install, operate, repair, maintain, replace, and remove those certain Wells and Associated Facilities enumerated, described and located as specifically set forth in **Exhibit B** attached hereto and incorporated herein for all purposes upon the Surface Premises for the purposes of tracking the Spill, treating affected groundwater, recovering spilled hydrocarbons and/or affected groundwater from the surface and/or subsurface of the Surface Premises, closing and removing the Wells and Associated Facilities at the conclusion of the remediation, and restoring the Surface Premises, all subject to and in accordance with the terms of this Agreement, and the locations of the existing recovery and monitoring wells and dual-phase extraction system are depicted on the attached **Exhibit B**, and the number, type and location of Wells and Associated Facilities designated for

placement following the execution of this Agreement are also depicted on **Exhibit B** (collectively, the "Remediation Plans"). Notwithstanding anything to the contrary contained in this Agreement, this Agreement is not a waiver for, nor does it grant permission for any activities or the installation of any Wells or Associated Facilities not specifically included in the Remediation Plans; provided, however, that in the event the Texas Commission on Environmental Quality ("TCEQ") and/or Operator determines that additional and/or different Wells and/or Associated Facilities are necessary on the Surface Premises in connection with Operator's remediation of the Spill, Operator shall provide revised Remediation Plans in writing to the City Manager of City, and such revised Remediation Plans shall be subject to the approval of the City Manager. The granting of approval for any such revised Remediation Plans shall be in the sole discretion of the City Manager, provided that such approval shall not be unreasonably withheld, conditioned or delayed, further subject to any required approval of the City Council of the City of Midland, Texas or other applicable governmental approval which may be required.

(b) This Agreement constitutes the entire agreement between City and Operator concerning the subject matter hereof and supersedes all previous oral and written agreements relating to the subject matter of this Agreement, including, but not limited to, that certain right-of-way agreement dated February 23, 2010, as amended, between City and Operator (the "Right-of-Way Agreement"). Any rights previously granted under the Right-of-Way Agreement are hereby revoked and terminated in their entirety. The termination of the Right-of-Way Agreement and revocation of the rights contained therein shall survive the term of this Agreement in all respects.

(c) Operator shall have ingress to and egress from any non-paved portions of the Surface Premises only in the locations shown on **Exhibit B**. The foregoing shall not limit Operator's rights to use any paved public road located on the Surface Premises. Operator shall not construct any new road upon the Surface Premises. City expressly reserves the full right to grant other licenses, easements and/or rights-of-way in, upon and across the Surface Premises. City expressly reserves the right to use and to grant to third parties the right to use the Surface Premises and the subsurface below and airspace above the Surface Premises for any purpose. Without limiting the foregoing, (i) Operator shall not interfere with any activities of City deemed by City to be for legitimate public purposes on the Surface Premises, and (ii) City expressly reserves the right to install in or on the Surface Premises any streets or alleys and all ancillary public uses usual and customary in connection with streets and alleys, expressly including but not limited to, drainage facilities and structures and public utilities. Any and all utilities and appurtenances shall include, without limitation, pipelines, conduits, and pole lines, which may be installed on, above or below ground by City. Any installation or activity permitted by this subsection shall not displace, unreasonably interfere with or damage the Wells or Associated Facilities. City shall be responsible for repairing any damage to the Wells or Associated Facilities occurring as a direct result of the use of the Surface Premises, subsurface or airspace by City.

(d) Operator agrees that it shall access the Wells and Associated Facilities in a manner consistent with reasonable entrance and exit and security procedures designated by City.

(e) Without limiting the provisions of subparagraph (a) above, Operator agrees that it shall not be entitled to use any more of the surface of the Surface Premises than is

reasonably necessary and that all surface installations shall be kept to a reasonable minimum consistent with industry-standard operating practices. Additionally, Operator hereby acknowledges and agrees that notwithstanding any implied right of use under the laws of the State of Texas that might otherwise apply relating to exploitation of the mineral estate under the Surface Premises, all operations conducted in connection with remediation of the Spill will be conducted in compliance with the terms of this Agreement.

2. TERM AND TERMINATION:

(a) This Agreement shall be for a term of fifteen (15) years (the "Initial Term"), commencing on the date of this Agreement (the "Commencement Date") unless terminated earlier as provided hereafter. This Agreement shall renew at the end of the Initial Term for one (1) additional term of five (5) years (the "Extended Term") upon the written request of Operator to the City Manager of City received not more than one (1) year and not less than ninety (90) days prior to the expiration of the Initial Term, unless terminated earlier upon the written request of Operator received by the City Manager of City on or before thirty (30) days prior to the expiration of the Initial Term.

(b) City may terminate this Agreement if Operator fails to pay, when due, any amount owing under this Agreement and that failure continues for sixty (60) days after Operator's receipt of notice of such failure to pay. City may also terminate this Agreement if Operator commits any material breach or material default in performance of any obligation, prohibition, restriction, or covenant contained in this Agreement, and the breach or default continues for a period of thirty (30) days after City delivers notice to Operator reasonably detailing the breach or default.

(c) Notwithstanding anything to the contrary contained in this Agreement, it is specifically provided that as an express condition of this Agreement, and not as a mere covenant, if the Surface Premises cease to be used by Operator for the purposes enumerated herein for any period of six (6) months or longer, then and in that event, this Agreement shall terminate at City's option, as evidenced by City's written notice to Operator of such termination.

3. FINANCIAL CONSIDERATIONS:

As compensation for the surface use and operations during the term of this Agreement, Operator shall pay to City an annual fee which shall be payable each year on or before the anniversary of the Commencement Date of this Agreement (the "Annual Fee"). Operator's failure to make the Annual Fee payment within thirty (30) days after the Annual Fee is due shall constitute a late payment and Operator shall pay City interest thereon in the amount of (i) eighteen percent (18%) per annum from the date the Annual Fee is due, or (ii) the maximum amount of interest allowable by law, whichever is less. The parties agree that the Annual Fee is based on separating the Surface Premises into two parcels known as the "FAA Regulated Parcel" and the "Other City Parcels", each as more particularly described on **Exhibit C** attached hereto and incorporated herein by reference, and equals the sum of: (x) for the FAA Regulated Parcel, the appraised fair market rental value of the Surface Premises on a per square foot basis multiplied by a minimum of 100 square feet of the Surface Premises occupied by each of the Wells and Associated Facilities existing and contemplated to be placed on the FAA Regulated Parcel as of

the date of such calculation; plus (y) for the Other City Parcels, Five Hundred and no/100 Dollars ($500.00) for each of the Wells and Associated Facilities existing and contemplated to be placed on the Other City Parcels on or about the Commencement Date of this Agreement. Every five (5) years during the term of this Agreement the portion of the Annual Fee attributable to the FAA Regulated Parcel described in the immediately preceding clause (x) shall be recalculated in accordance with such clause (x) using an appraisal of the fair market rental value of the applicable portions of the Surface Premises which is dated within thirty (30) days of the date of such recalculation. In the event City requests that such appraisals be conducted on or before certain dates during such five-year periods, Operator agrees to abide by such requests. Such appraisals shall be at the sole cost and expense of Operator; provided, however, that in the event City does not agree with the findings of any such appraisal, City may, at its own cost and expense, obtain its own such appraisal from a third-party appraiser and City may elect to use the appraised value as determined by either such appraisal in connection with the calculation in the preceding clause (x). The Annual Fee due annually for the first five (5) years after the Commencement Date of this Agreement is as set forth on **Exhibit C** attached hereto and incorporated herein by reference. Notwithstanding anything to the contrary contained herein, the parties agree that the Annual Fee shall be adjusted accordingly if additional Wells and/or Associated Facilities are placed on or removed from other portions of the FAA Regulated Parcel or the Other City Parcels under the terms of this Agreement.

At the end of the Initial Term of this Agreement, for any Extended Term consented to by the City Manager, the rate for the portion of the Annual Fee attributable to the Other City Parcels shall be renegotiated, with any increase not to exceed twenty-five percent (25%) of the Initial Term's rate attributable to the Other City Parcels. Subject to the foregoing, the rate for the portion of the Annual Fee attributable to the Other City Parcels for any such Extended Term shall be determined by City if the parties are unable to agree on such rate for any Extended Term.

The payments shall be made to City at the office of the City of Midland Right-of-Way Manager, P.O. Box 1152, Midland, Texas 79702.

The payments required as part of this Agreement shall be exclusive of and in addition to all general municipal taxes of whatever nature, including but not limited to ad valorem taxes and special taxes and assessments for public improvements.

4. NOTICE BETWEEN CITY AND OPERATOR:

(a) Prior to commencing the drilling of any Well and/or the construction of any Associated Facility under the terms of this Agreement on the Surface Premises, Operator shall notify City in writing of the specific activity that is to be conducted and the approximate date and location of such activity, such notice to be given no later than ten (10) days prior to the commencement of such drilling and/or construction, except in an emergency situation in which case Operator will provide written notice as soon as reasonably practicable.

(b) Operator shall provide to City within ten (10) days after such filing is made or such document is prepared, as applicable, unless a different time period is specified herein, copies of any documents filed or submitted to the Railroad Commission of Texas, the TCEQ, the Federal

Aviation Administration or any other governmental or regulatory agency or authority (excluding, for clarification, City) regarding the Surface Premises, the Wells, the Associated Facilities, the Remediation Plans and/or any activities of Operator related to this Agreement.

(c) All communications by City to Operator shall be directed to:

Name: Lori Coupland, Director of Compliance and EHS
Address: 2828 N. Harwood, Suite 1300
Dallas, Texas 75201
Phone: 214-954-6662
Email: Lori.Coupland@hollyenergy.com

With a copy to:

Name: General Counsel, HEP FIN-TEX/Trust River L.P.
Address: 2828 N. Harwood, Suite 1300
Dallas, Texas 75201

(d) Except as otherwise provided in this Agreement, all communications by Operator to City shall be directed to:

Name: John Simmons, Right-of-Way Manager
Address: P.O. Box 1152
Midland, Texas 79702
Phone: 432-685-7200
Email: jsimmons@midlandtexas.gov

In addition, all communications by Operator to City involving the FAA Regulated Parcel shall also be directed to:

Name: Justine Ruff, Director of Airports
Address: P.O. Box 60305
Midland, Texas 79711
Phone: 432-560-2200 ext. 3001
Email: jruff@midlandtexas.gov

5. WELLS AND ASSOCIATED FACILITIES:

(a) All drill sites shall be at such locations, of such maximum sizes and in accordance with such specifications, in each case as are included in the Remediation Plans. All casing, pipe and other materials used by Operator in the Wells shall be of a type and quality meeting Railroad Commission of Texas and/or TCEQ, as applicable, standards.

(b) The locations and specifications for any and all Associated Facilities shall be included in the Remediation Plans. All materials used by Operator in the Associated Facilities shall be of a type and quality meeting Railroad Commission of Texas and/or TCEQ, as applicable,

standards. Operator shall at all times maintain all Associated Facilities located on the Surface Premises in good repair and condition, in a properly painted condition through use of paint color(s) approved by City, and kept free of rust, stains, weeds and trash.

(c) No trash, junk or other materials shall be burned or buried on the Surface Premises or any other portion of City's lands, but shall be removed therefrom. Permanent internal combustion engines on pumping units (artificial lift equipment) are expressly prohibited from use on the Surface Premises. Operator shall install an electric motor to operate any pumping unit placed by Operator on the Surface Premises to operate any Well.

6. ELECTRIC LINES:

(a) All electric lines used or installed by Operator on the Surface Premises shall be at such locations and in accordance with such specifications, in each case as are included in the Remediation Plans. In the event Operator desires to construct or install any electric line which is not included in the Remediation Plans, Operator must obtain the prior written consent of the City Manager of City for such electric line, including, without limitation, as to the location and specifications therefor, which consent shall be in the sole discretion of the City Manager of City. Once any electric line route has been determined, Operator shall doze or grub and pile all obstructive vegetation along the route. All obstructive vegetation shall then be removed from the Surface Premises.

(b) If Operator constructs any electric line on the Surface Premises, Operator agrees that before abandonment or removal of any such electric line or upon the termination of this Agreement, whichever occurs first, it will offer the same to City, without compensation. If City elects to accept such electric line, said electric line shall be and become the property of City, its successors and assigns, and Operator shall surrender and assign or shall cause all such appropriate parties to surrender and assign to City, its successors and assigns, said electric line by such instruments in form and substance reasonably required by City. If City elects not to accept such electric line, then Operator shall, at its sole cost and expense, remove such electric line. An electric line shall be deemed to be abandoned for purposes of this Agreement if it has not been used to deliver electricity for a period of six (6) months. If Operator fails to remove any electric line that City has not elected to accept within ninety (90) days of the first to occur of abandonment of such electric line or upon the termination of this Agreement, City may do so at the sole expense of Operator.

(c) Unless otherwise agreed to in writing by City, electric lines may only be installed hereunder for the purpose of providing electricity to Operator's permitted facilities and equipment located on the Surface Premises.

7. STORAGE OF MACHINERY AND EQUIPMENT:

Operator shall not use any part of the Surface Premises to store any machinery, rigs, equipment, pipe or other property of Operator, except as may be necessary for operation of the Wells and Associated Facilities.

8. TRASH:

Operator will keep the Surface Premises free of trash and debris at all times. Under no circumstances will Operator be allowed to bury any trash or other debris on or under the Surface Premises. City shall have the right to expel and permanently ban from the Surface Premises any person observed disposing of trash on the Surface Premises. Upon the completion of any operation, all ribbons, flags, stakes and similar items shall be promptly removed from the Surface Premises.

9. HUNTING, FISHING AND ALCOHOL PROHIBITED:

No agent, employee, representative, contractor or subcontractor of Operator or any other person allowed to enter the Surface Premises by Operator shall be permitted to hunt, fish, trap, camp, picnic, ride motorcycles or four-wheelers or otherwise conduct any social gathering on the Surface Premises, nor shall any such persons be permitted to bring firearms, archery equipment, dogs, alcoholic beverages or illegal drugs on the Surface Premises at any time. Violations of this provision shall cause the violator to be regarded as a trespasser and subject to prosecution under trespass laws of the State of Texas. City shall have the right to expel and permanently ban from the Surface Premises any person observed on the Surface Premises in violation of this provision.

10. CONDUCT OF OPERATIONS:

Notwithstanding anything herein to the contrary, Operator and City acknowledge and agree that:

(a) Operator shall comply in all its operations with all applicable ordinances, laws, rules and regulations of each governmental, municipal and/or regulatory authority having jurisdiction over such operations; and

(b) without limiting (a) immediately above, as to any portion of the Surface Premises located in or near any airport, Operator shall comply in all its operations with all applicable Federal Aviation Administration and Transportation Security Administration rules and regulations and shall secure in advance all necessary approvals, permits and consents, and shall in addition comply with all reasonable directions of the City of Midland Director of Aviation relating to the public safety and welfare, and the safety of aviation related activities, including without limitation directives, rules, ordinances and regulations relating to operations, equipment height, location and safety markings.

11. SPEED LIMIT:

Except as to roads upon which a speed limit has been posted by the applicable governmental authorities, a speed limit of 25 miles per hour on the Surface Premises will be observed by Operator and its agents, employees, representatives, contractors and subcontractors. At the request of City, Operator shall place speed limit signs reasonably approved by City for non-public right-of-way usage at entrances onto the Surface Premises. City shall have the right to expel and permanently ban from the Surface Premises any person liable of exceeding such speed limit.

12. REMOVAL OF PROPERTY:

(a) Except as otherwise provided herein, Operator shall have the right at any time during the Initial Term or the Extended Term of this Agreement as to any portion of the Surface Premises, to remove all Wells and Associated Facilities and other equipment placed by Operator on any such portion of the Surface Premises then belonging to Operator and not taken over by City under some other provision of this Agreement, and Operator shall, at its sole cost and expense, restore such portion of the Surface Premises to its original condition as nearly as reasonably practicable. Operator agrees to plant the disturbed area with the type and quantity of grass or other reasonable landscaping designated by City. If Operator fails to take such restoration actions, City may do so at the sole expense of Operator. Without limiting the foregoing, said work shall meet minimum requirements under all applicable local, state or federal laws, rules or regulations, and shall be subject to the approval of the City Manager of City, which approval shall not be unreasonably withheld. Removal of Wells, Associated Facilities, and other equipment upon expiration or termination of this Agreement is governed by the subsections below.

(b) Upon expiration or termination of this Agreement, (i) at City's option, Operator shall either: (A) properly close and plug the Wells, and remove all Associated Facilities and other equipment placed by Operator on the Surface Premises and not taken over by City under some other provision of this Agreement, or (B) remove the Wells (including, without limitation, drawing and removing all casing if feasible) and all Associated Facilities and other equipment placed by Operator on the Surface Premises and not taken over by City under some other provision of this Agreement, and (ii) Operator shall, at its sole cost and expense, restore the Surface Premises to its original condition as nearly as reasonably practicable. Operator agrees to plant the disturbed area with the type and quantity of grass or other reasonable landscaping designated by City. If Operator fails to take such restoration actions, City may do so at the sole expense of Operator. Without limiting the foregoing, said work shall meet minimum requirements under all applicable local, state or federal laws, rules or regulations, and shall be subject to the approval of the City Manager of City, which approval shall not be unreasonably withheld.

(c) The work set forth in subsection (b) above shall be completed within ninety (90) days after the effective date of expiration or termination of this Agreement, except when timely completion of the work is delayed by Force Majeure (as defined herein). If Operator fails to complete the work within said 90-day period, (i) City may remove or plug, at City's option, all Wells at the sole expense of Operator, and (ii) such remaining Associated Facilities and other equipment shall, at the election of City, either become owned by City or City may have such Associated Facilities and other equipment removed at the sole expense of Operator; provided, however, Operator shall not be relieved of its liability to remove or plug, as determined by City, all Wells.

(d) The terms, provisions and requirements of this Paragraph 12 shall survive the termination or expiration of this Agreement.

13. INDEMNIFICATION AND ENVIRONMENTAL PROTECTION:

TO THE FULLEST EXTENT PERMITTED BY APPLICABLE LAW, OPERATOR, ITS SUCCESSORS AND ASSIGNS, AGREE TO INDEMNIFY, PROTECT, DEFEND AND HOLD HARMLESS CITY AND CITY'S REPRESENTATIVES, AGENTS, ATTORNEYS, EMPLOYEES, SUCCESSORS AND ASSIGNS (COLLECTIVELY, "INDEMNITEES") FOR, FROM AND AGAINST ANY AND ALL CLAIMS, LOSSES, DAMAGES, LIABILITIES, LIENS, FINES, PENALTIES, CAUSES OF ACTION, SUITS, CHARGES, JUDGMENTS, ADMINISTRATIVE ORDERS, REMEDIATION REQUIREMENTS, ENFORCEMENT ACTIONS OF ANY KIND, PERSONAL INJURIES, PROPERTY DAMAGE, AND ALL COSTS AND EXPENSES INCURRED IN CONNECTION THEREWITH (INCLUDING, BUT NOT LIMITED TO, REASONABLE ATTORNEYS' FEES AND EXPENSES, INCLUDING, WITHOUT LIMITATION, ALL REASONABLE ATTORNEYS' FEES AND EXPENSES INCURRED IN ENFORCING THIS INDEMNITY) OF ANY NATURE, KIND OR DESCRIPTION OF ANY PERSON OR ENTITY, DIRECTLY OR INDIRECTLY ARISING OUT OF, CAUSED BY OR RESULTING FROM (IN WHOLE OR IN PART) THIS AGREEMENT, OPERATOR'S USE OF OR ACTIVITIES ON THE SURFACE PREMISES, OR ANY ACT OR OMISSION OF OPERATOR, ANY CONTRACTOR, SUBCONTRACTOR, ANYONE DIRECTLY OR INDIRECTLY EMPLOYED BY THEM IN CONJUNCTION WITH THIS AGREEMENT, OR ANYONE THAT THEY CONTROL OR EXERCISE CONTROL OVER (COLLECTIVELY, "LIABILITIES"), EXCEPT TO THE EXTENT THAT SUCH LIABILITIES ARISE FROM OR ARE ATTRIBUTED, IN WHOLE, TO THE NEGLIGENCE OF ANY INDEMNITEE. OPERATOR SHALL PROMPTLY ADVISE CITY OF ANY ACTION, ADMINISTRATIVE OR LEGAL PROCEEDING OR INVESTIGATION TO WHICH THIS INDEMNIFICATION MAY APPLY, AND OF WHICH OPERATOR HAS RECEIVED NOTICE, AND OPERATOR, AT OPERATOR'S EXPENSE, SHALL ASSUME ON BEHALF OF CITY (AND THE OTHER INDEMNITEES) AND CONDUCT WITH DUE DILIGENCE AND IN GOOD FAITH THE DEFENSE THEREOF WITH COUNSEL REASONABLY SATISFACTORY TO CITY; PROVIDED, HOWEVER, THAT ANY INDEMNITEE SHALL HAVE THE RIGHT, AT ITS OPTION, TO BE REPRESENTED THEREIN BY COUNSEL OF ITS OWN SELECTION AND AT ITS OWN EXPENSE. IN THE EVENT OF FAILURE BY OPERATOR TO ASSUME THE DEFENSE OF CITY IN ACCORDANCE WITH THIS INDEMNIFICATION, CITY, AT ITS OPTION, AND WITHOUT RELIEVING OPERATOR OF ITS OBLIGATION HEREUNDER, MAY ASSUME SUCH DEFENSE, AFTER WRITTEN NOTICE THEREOF TO OPERATOR AND OPERATOR'S FAILURE TO RESPOND THERETO WITHIN TEN (10) BUSINESS DAYS AFTER RECEIPT OF SUCH NOTICE (SAID TEN (10) BUSINESS DAY PERIOD SHALL NOT APPLY IN ANY CASE WHERE IMMEDIATE ANSWERS, RESPONSES, OR OTHER AFFIRMATIVE ACTION IS REQUIRED TO PRESERVE THE RIGHTS OF CITY) BUT ALL REASONABLE COSTS AND EXPENSES SO INCURRED BY CITY IN THAT EVENT SHALL BE REIMBURSED BY OPERATOR TO CITY, TOGETHER WITH INTEREST ON THE SAME FROM THE DATE ANY SUCH EXPENSE WAS PAID BY CITY UNTIL REIMBURSED BY OPERATOR, AT THE RATE OF INTEREST PROVIDED TO BE PAID ON JUDGMENTS, BY THE LAWS OF THE STATE OF TEXAS.

WITHOUT LIMITING THE ABOVE PARAGRAPH, OPERATOR, ITS SUCCESSORS AND ASSIGNS, SHALL INDEMNIFY, PROTECT, DEFEND AND HOLD INDEMNITEES HARMLESS FROM AND AGAINST ALL CLAIMS, LOSSES, DAMAGES, LIABILITIES, LIENS, FINES, PENALTIES, CAUSES OF ACTION, SUITS, CHARGES, JUDGMENTS, ADMINISTRATIVE ORDERS, REMEDIATION REQUIREMENTS, ENFORCEMENT ACTIONS OF ANY KIND, PERSONAL INJURIES, PROPERTY DAMAGE, AND ALL COSTS AND EXPENSES INCURRED IN CONNECTION THEREWITH (INCLUDING, BUT NOT LIMITED TO, REASONABLE ATTORNEYS' FEES AND EXPENSES, INCLUDING, WITHOUT LIMITATION, ALL REASONABLE ATTORNEYS' FEES AND EXPENSES INCURRED IN ENFORCING THIS INDEMNITY) OF ANY NATURE, KIND OR DESCRIPTION OF ANY PERSON OR ENTITY, DIRECTLY OR INDIRECTLY ARISING OUT OF, CAUSED BY OR RESULTING FROM (IN WHOLE OR IN PART) (i) FAILURE OF OPERATOR, ANY CONTRACTOR, SUBCONTRACTOR, ANYONE DIRECTLY OR INDIRECTLY EMPLOYED BY THEM, OR ANYONE THAT THEY CONTROL OR EXERCISE CONTROL OVER (COLLECTIVELY, THE "INDEMNIFYING PARTIES"), TO COMPLY WITH ALL APPLICABLE LOCAL, FEDERAL AND/OR STATE ENVIRONMENTAL LAWS, INCLUDING BUT NOT LIMITED TO THE RESOURCE CONSERVATION AND RECOVERY ACT (RCRA) AND THE COMPREHENSIVE ENVIRONMENTAL RESPONSE, COMPENSATION, AND LIABILITY ACT (CERCLA) (AS THEY MAY BE REAUTHORIZED AND/OR AMENDED) AND ALL OTHER LOCAL, FEDERAL AND STATE LAWS, IN CONNECTION WITH OR RELATED TO ANY INDEMNIFYING PARTY'S OPERATIONS OR ACTIVITIES ON THE SURFACE PREMISES, OR (ii) ANY INDEMNIFYING PARTY'S HANDLING, STORING, RELEASING OR TRANSPORTING OR DISPOSING OF ALL SUBSTANCES, INCLUDING BUT NOT LIMITED TO HAZARDOUS SUBSTANCES AND HAZARDOUS WASTES, ON OR FROM THE SURFACE PREMISES.

IT IS THE INTENTION OF THE PARTIES HERETO THAT THE PROVISIONS OF THIS INDEMNIFICATION SHALL APPLY TO AND PROTECT EACH INDEMNITEE FROM THE CONSEQUENCES OF STRICT LIABILITY IMPOSED OR THREATENED TO BE IMPOSED ON SUCH INDEMNITEE IN CONNECTION WITH ANY OF THE FOREGOING, AS WELL AS FROM THE CONSEQUENCES OF THE NEGLIGENCE (BUT NOT GROSS NEGLIGENCE OR WILLFUL MISCONDUCT) OF ANY INDEMNITEE, WHETHER OR NOT THAT NEGLIGENCE IS A CONTRIBUTING OR CONCURRING CAUSE OF ANY LIABILITY INDEMNIFIED AGAINST IN THIS PARAGRAPH 13.

THE TERMS, PROVISIONS, REQUIREMENTS AND OBLIGATIONS OF THIS PARAGRAPH 13 SHALL SURVIVE TERMINATION OR EXPIRATION OF THIS AGREEMENT, AND SHALL NOT BE LIMITED BY OR TO DAMAGES, COMPENSATION OR BENEFITS PAYABLE UNDER INSURANCE POLICIES, WORKER'S COMPENSATION ACTS, DISABILITY BENEFIT ACTS OR OTHER EMPLOYEES' BENEFIT ACTS.

14. INSURANCE:

At all times during the term of this Agreement and for two (2) years after the termination or expiration of this Agreement, Operator shall maintain insurance meeting the following minimum requirements:

Comprehensive General Liability (including Contractual liability):

-Personal Injury:	$1,000,000.00 per person $1,000,000.00 per occurrence
-Property Damage:	$100,000.00 per occurrence
Business Automobile Liability:	$1,000,000.00 combined single limit - Personal Injury and Property Damage
Workers' Compensation:	Statutory limits
Employers' Liability:	$1,000,000.00 per accident or occurrence
Umbrella Liability:	$10,000,000.00 each occurrence $10,000,000.00 aggregate

The Commercial General Liability shall be on a per project aggregate, including completed operations, and shall be on a claims-occurred basis.

The Workers' Compensation coverage provided by Operator shall inure to the benefit of employees injured during the course and scope of their employment by Operator pursuant to this Agreement.

The Business Automobile Liability insurance provided by Operator shall cover any auto for bodily injury and property damage, including owned vehicles, hired and non-owner vehicles, and employee non-ownership, and the amount of such policy shall be a minimum of $1,000,000.00 covering any vehicle used for the execution of the work that is the subject of this Agreement.

All insurance required pursuant to this Agreement, except for Workers' Compensation Insurance, shall name City as an additional insured to the extent of the liabilities assumed by Operator. All insurance required pursuant to this Agreement, including Workers' Compensation Insurance, shall provide for a waiver of subrogation as to City.

The parties agree that, prior to the execution of this Agreement, Operator shall provide one or more certificates of insurance showing that the requirements of this article have been met, and specifically containing, without limitations, the following endorsement or comparable endorsement approved by the City Manager:

> ***"The City of Midland is included as an additional insured on all policies to the extent of the liabilities assumed by Operator, except***

for Workers' Compensation. Operator and Insurer hereby waive all rights of subrogation with respect to claims against the City of Midland, its agents, employees and officers, on all policies of insurance."

City shall be provided written notice by Operator's insurance provider not later than thirty (30) days prior to any reduction or termination of such coverage. City shall not be required to provide any insurance whatsoever pursuant to this Agreement.

Operator shall contractually require all contractors, subcontractors, and sub-subcontractors that work on any portion of the work that is the subject of this Agreement to obtain insurance coverage that meets or exceeds the minimum amounts specified herein. All contractors, subcontractors, and sub-subcontractors shall obtain insurance policies that provide blanket waivers of subrogation in favor of City and policies that name City as an additional insured to the extent of the liabilities assumed (except workers' compensation). Operator certifies that the certificates of insurance to be provided as required herein shall comply with the requirements of Chapter 1811 of the Texas Insurance Code. Operator shall not use an unapproved certificate of insurance or insert inappropriate language on a certificate. Compliance with state law is the sole responsibility of Operator. Except for the Umbrella Liability policy which shall be maintained by Operator and evidenced as described above, Operator may elect at any time to self-insure for all or a portion of the risk identified in this Section 14.

15. WAIVER; GOVERNMENTAL IMMUNITY:

No waiver of any of the provisions of this Agreement shall be deemed or constitute a waiver of any other provision of this Agreement, nor shall such waiver constitute a continuing waiver unless otherwise expressly provided. Likewise, the failure of City to enforce any provision of this Agreement shall not be deemed nor shall constitute a waiver of the right of City to enforce such provision.

By executing this Agreement, City is not waiving its right of governmental immunity. City is retaining its immunity from suit. City is not granting consent to be sued by legislative resolution or action. **THERE IS NO WAIVER OF GOVERNMENTAL IMMUNITY.**

16. ENFORCEMENT:

Except as otherwise specifically provided for herein, in the event Operator fails to take the actions required under this Agreement, City may notify Operator and Operator shall have thirty (30) days to remedy such failure. If Operator fails to remedy such failure and City conducts the required action on behalf of Operator, Operator agrees to pay all reasonable costs incurred by City related to such required action within thirty (30) days of receipt of an invoice for such action. Any amount not paid within said thirty (30) day period shall bear interest at a rate of eighteen (18) percent per annum or the highest interest rate allowed by law, whichever is less, from its due date until paid.

17. ATTORNEY'S FEES:

SHOULD CITY BE REQUIRED TO RESORT TO EMPLOYMENT OF ATTORNEYS TO ENFORCE THIS AGREEMENT, OR ANY OF ITS RIGHTS UNDER THIS AGREEMENT, CITY SHALL BE ENTITLED TO REIMBURSEMENT FROM OPERATOR FOR CITY'S ATTORNEYS' FEES. OPERATOR SHALL REIMBURSE CITY FOR CITY'S ATTORNEYS' FEES INCURRED IN CONNECTION WITH THE PREPARATION AND NEGOTIATION OF THIS AGREEMENT, SUCH FEES IN CONNECTION WITH THE PREPARATION AND NEGOTIATION OF THIS AGREEMENT NOT TO EXCEED $10,000.

BY EXECUTING THIS AGREEMENT, OPERATOR AGREES TO WAIVE AND DOES HEREBY KNOWINGLY, CONCLUSIVELY, VOLUNTARILY AND INTENTIONALLY WAIVE ANY CLAIM IT HAS OR MAY HAVE IN THE FUTURE AGAINST CITY, REGARDING THE AWARD OF ATTORNEY'S FEES, WHICH ARE IN ANY WAY RELATED TO THIS AGREEMENT, OR THE CONSTRUCTION, INTERPRETATION, VALIDITY OR BREACH OF THIS AGREEMENT. WITHOUT LIMITING THE FOREGOING, OPERATOR SPECIFICALLY AGREES THAT IF OPERATOR BRINGS OR COMMENCES ANY LEGAL ACTION OR PROCEEDING RELATED TO THIS AGREEMENT OR TO THE CONSTRUCTION, INTERPRETATION, VALIDITY OR BREACH OF THIS AGREEMENT, INCLUDING BUT NOT LIMITED TO ANY ACTION PURSUANT TO THE PROVISIONS OF THE TEXAS UNIFORM DECLARATORY JUDGMENTS ACT (TEXAS CIVIL PRACTICE AND REMEDIES CODE SECTION 37.001, ET SEQ., AS AMENDED), OR CHAPTER 271 OF THE TEXAS LOCAL GOVERNMENT CODE, OPERATOR AGREES TO ABANDON, WAIVE AND RELINQUISH ANY AND ALL RIGHTS TO THE RECOVERY OF ATTORNEY'S FEES TO WHICH OPERATOR MIGHT OTHERWISE BE ENTITLED.

OPERATOR AGREES THAT THIS IS THE VOLUNTARY AND INTENTIONAL RELINQUISHMENT AND ABANDONMENT OF A PRESENTLY EXISTING KNOWN RIGHT. OPERATOR ACKNOWLEDGES THAT IT UNDERSTANDS ALL TERMS AND CONDITIONS OF THIS AGREEMENT. OPERATOR FURTHER ACKNOWLEDGES AND AGREES THAT THERE WAS AND IS NO DISPARITY OF BARGAINING POWER BETWEEN CITY AND OPERATOR. THIS SECTION SHALL NOT BE CONSTRUED OR INTERPRETED AS A WAIVER OF GOVERNMENTAL IMMUNITY.

OPERATOR AND CITY ARE RELYING ON THEIR OWN JUDGMENT. EACH PARTY HAD THE OPPORTUNITY TO DISCUSS THIS AGREEMENT WITH LEGAL COUNSEL PRIOR TO ITS EXECUTION.

18. <u>RELEASE</u>:

NOTWITHSTANDING ANY OTHER PROVISIONS OF THIS AGREEMENT, OPERATOR HEREBY RELEASES, ACQUITS, RELINQUISHES AND FOREVER DISCHARGES CITY AND CITY'S EMPLOYEES AND OFFICERS, FROM ANY AND ALL DEMANDS, CLAIMS, DAMAGES, OR CAUSES OF ACTION OF ANY KIND WHATSOEVER WHICH OPERATOR HAS OR MIGHT HAVE IN THE FUTURE,

INCLUDING BUT NOT LIMITED TO BREACH OF CONTRACT, QUANTUM MERUIT, CLAIMS UNDER THE DUE PROCESS AND TAKINGS CLAUSES OF THE TEXAS AND UNITED STATES CONSTITUTIONS, TORT CLAIMS, OR CITY'S NEGLIGENCE.

19. NOTICE OF ALLEGED BREACH; STATUTORY PREREQUISITES:

Without limiting the provisions of Paragraph 18 of this Agreement, as a condition precedent to filing suit for alleged damages incurred by an alleged breach of an express or implied provision of this Agreement, Operator or Operator's legal representative, shall give the City Manager, or any other reasonable official of City, notice in writing (consisting of one original and seven copies of notice attached to a copy of this Agreement) of such damages, duly verified, within one hundred twenty (120) days after the same has been sustained. The discovery rule does not apply to the giving of this notice. The notice shall include when, where and how the damages occurred, the apparent extent thereof, the amount of damages sustained, the amount for which Operator will settle, the physical and mailing addresses of Operator at the time and date the claim was presented and the physical and mailing addresses of Operator for the six months immediately preceding the occurrence of such damages, and the names and addresses of the witnesses upon whom Operator relies to establish its claim; and a failure to so notify the City Manager or other reasonable City official within the time and manner provided herein shall exonerate, excuse and except City from any liability whatsoever. City is under no obligation to provide notice to Operator that Operator's notice is insufficient. City reserves the right to request reasonable additional information regarding the claim. Said additional information shall be supplied within thirty (30) days after receipt of notice.

The statutory prerequisites outlined herein constitute jurisdictional requirements pursuant to Section 271.154 of the Texas Local Government Code and Section 311.034 of the Texas Government Code. Notwithstanding any other provision, Operator's failure to comply with the requirements herein shall perpetually bar Operator's claim for damages under Chapter 271 of the Texas Local Government Code, and Section 311.034 of the Texas Government Code, regardless if City has actual or constructive notice or knowledge of said claim or alleged damages. Operator agrees that the requirements of this entire Agreement are reasonable.

20. WAIVER OF GOVERNMENTAL IMMUNITY; CHAPTER 271, TEX. LOC. GOV'T CODE:

The parties hereto agree that this Agreement does not constitute a "Contract" for providing goods and/or services to City as set forth in Subchapter I of Chapter 271 of the Texas Local Government Code, and City does not waive, to the maximum extent allowed by law, any constitutional, statutory or common law right to sovereign immunity or governmental immunity from liability or suit. City expressly does not consent to be sued or be liable. To the maximum extent allowed by law, nothing in this Agreement constitutes a waiver of City's governmental immunity and the parties hereto expressly agree that this Agreement shall not constitute, nor be interpreted as a waiver of City's governmental immunity under Subchapter I of Chapter 271 of the Texas Local Government Code, nor shall it constitute nor be interpreted as a waiver of City's governmental immunity for the benefit of any third party lacking privity to this Agreement.

This Agreement does not obligate Operator to use the Surface Premises to construct, repair, operate, replace, or maintain equipment, structures, improvements, and/or facilities associated with Operator's activities described herein, rather, it merely prohibits Operator from using the Surface Premises for any other purpose. This Agreement restricts the use of the Surface Premises to a specific purpose but does not require the use of property for a specific purpose. Operator is not providing a service to City. Any such provision shall be deemed to be a covenant against noncomplying use, not a covenant to use. Operator's use of the Surface Premises in compliance with a restriction shall not constitute a service, and such complying use shall not operate to waive City's governmental immunity.

21. THIRD-PARTY BENEFICIARY:

Except as provided in Paragraph 13 with respect to Indemnitees, this Agreement is intended solely for the use and benefit of the parties hereto and shall not constitute or be construed as a contract for the benefit of any third party.

22. SUCCESSORS AND ASSIGNS:

The provisions of this Agreement shall inure to the benefit of and be binding upon City and Operator, their respective heirs, successors, representatives and permitted assigns. Operator shall not have the right to assign any of its rights or obligations under this Agreement without the prior written consent of City, which consent shall be in the sole discretion of City. Any permitted assignee shall expressly assume all of Operator's covenants, responsibilities and obligations under this Agreement in writing. Without limiting the foregoing, no permitted assignment of Operator's interests in this Agreement shall be effective until Operator has notified City of the assignment and identified the assignee's name, address and contact information. Upon assignment hereof in whole or in part by Operator, Operator shall remain fully liable for any breach of any obligation hereunder accruing prior to such assignment. City shall be furnished a true and correct copy of any permitted assignment within thirty (30) days after the execution thereof. This Agreement may only be amended by written instrument executed by City and Operator.

23. COVENANTS RUNNING WITH THE LAND:

The covenants and obligations of the parties under this Agreement shall be binding upon and shall run with the land and burden the Surface Premises.

24. COUNTERPART EXECUTION:

This Agreement may be executed in several counterparts, and any such agreement shall be deemed an original for all intents and purposes.

25. GOVERNING LAW AND VENUE:

This Agreement shall be governed by the laws of the State of Texas. All performance and payment made pursuant to this Agreement shall be deemed to have occurred in Midland County, Texas. Exclusive venue for any claims, suits or any other action arising from or connected in any way to this Agreement or the performance of this Agreement shall be in Midland County, Texas.

The obligations and undertakings of each of the parties to this Agreement shall be deemed to have occurred in Midland County, Texas.

26. NO RELEASE OF LIABILITY:

Notwithstanding anything to the contrary contained in this Agreement, the termination or expiration of this Agreement shall not relieve Operator of any liability, duty or obligation under this Agreement, nor shall it preclude City from asserting any right to specific performance, damages or any other rights or remedies to which City may be entitled. Upon termination or expiration of this Agreement for any reason, Operator shall execute and deliver a recordable release of this Agreement to City in form and substance satisfactory to City.

27. TEXAS HISTORICAL COMMISSION SURVEY:

Operator agrees that it shall comply with Chapter 191 of the Texas Natural Resources Code. Without limiting the foregoing, by executing this Agreement, Operator represents that it will contact the Texas Historical Commission (the "Commission") for the purpose of determining whether the Commission will request that an archaeological survey be completed before Operator commences any operations on the Surface Premises not previously commenced under a prior agreement between Operator and City, as contemplated herein. Operator agrees that it shall complete or cause to be completed an archaeological survey before commencing any operations on the Surface Premises not previously commenced under a prior agreement between Operator and City if the Commission so requests and deliver the same to City. Notwithstanding any provision contained herein, in the event that any site, object, artifact, or other feature of archaeological, scientific, educational, cultural, or historical interest is encountered during the operations authorized by this Agreement, Operator will immediately notify City and the Commission so that adequate measures may be undertaken to protect or recover such discoveries or findings, as deemed appropriate by City or the Commission.

28. CONSIDERATION:

The terms of this Agreement are supported by good and valuable consideration, the receipt and sufficiency of which is hereby acknowledged by the parties.

29. FORCE MAJEURE:

Except for any and all obligations to pay compensation when due and owing, neither Operator nor City shall be liable for any delay or failure in the keeping or performance of its obligations under this Agreement during the time and to the extent that any such failure arises by reason of Force Majeure. "Force Majeure" means any of the following causes to the extent such cause was neither foreseen nor reasonably foreseeable and is beyond the reasonable control of the party affected thereby: acts of war or the public enemy, whether war be declared or not, including terrorism; public disorder, epidemics, insurrection, rebellion, sabotage, riots or violent demonstrations; earthquakes, hurricanes, tornadoes, hail storms, torrents, floods, unusually severe weather or other natural calamities, disasters or acts of God; fire or explosion; strikes, lockouts or other industrial action by workers or employees of Operator; acts of the government of the United

States, the individual states, county or local governments and regulatory agencies, or acts of any foreign country. Upon the occurrence of an event of Force Majeure the party affected thereby shall promptly give written notice (setting forth full particulars) to the other party and shall resume the keeping and performance of the respective obligation within twenty (20) days after the cause of Force Majeure has come to an end. During the existence of a Force Majeure event each party shall bear its own costs resulting therefrom.

30. COMPLIANCE:

Operator agrees that it shall comply with Texas Government Code Section 2252.908, as amended, to the extent that this statute applies to this Agreement. Operator agrees that it shall comply with Texas Local Government Code Section 176.006, as amended, to the extent that this statute applies to this Agreement.

31. MEMORANDUM OF SURFACE USE AGREEMENT:

City and Operator have executed a Memorandum of Surface Use Agreement in the form attached hereto as **Exhibit D**, dated of even date herewith, for recording in the records of the County in which the Surface Premises are situated, to give record notice of this Surface Use Agreement. This Surface Use Agreement shall not be recorded except with the prior written consent of City.

[Remainder of page intentionally left blank; signature pages follow.]

EXECUTED by each party hereto to be effective for all purposes as of the date first set forth above.

CITY:

CITY OF MIDLAND, TEXAS

By: _____

Printed Name: _____

Date: _____

ATTEST:

_____
Amy M. Turner, City Secretary

[Signature Page Follows]

OPERATOR:

HEP FIN-TEX/TRUST RIVER, L.P.

By: _____
Mark Cunningham
Senior Vice President

STATE OF TEXAS §
§
COUNTY OF DALLAS §

BEFORE ME, the undersigned authority, on this day personally appeared Mark Cunningham, Senior Vice President of HEP Fin-Tex/Trust River, L.P., known to me to be the person and official whose name is subscribed to the foregoing instrument, and acknowledged to me that he executed the same as the act and deed of said entity, for the purposes and consideration therein expressed, and in the capacity therein stated.

GIVEN UNDER MY HAND AND SEAL OF OFFICE this the 16 day of August, 2020.

_____
Notary Public – State of Texas

BERNICE BLUDAU
Notary ID - 452259-1
My Commission Expires
July 16, 2022

EXHIBIT A

Attached to that certain Surface Use Agreement
between the City of Midland, Texas, as "City"
and
HEP Fin-Tex/Trust River, L.P., as "Operator"

Surface Premises

(see attached)

TRC

505 East Huntland Drive
Suite #250
Austin, TX 78752
Phone: 512.329.6080

PROJECT:
HOLLY ENERGY PARTNERS FIN-TEX PIPELINE
MIDLAND, TEXAS

TITLE:
SURFACE PREMISES

DRAWN BY:	MHORN
CHECKED BY:	JWARD
APPROVED BY:	EGILBERT
DATE:	JANUARY 2020
PROJ. NO.:	393718
FILE:	393718_ExA.mxd

EXHIBIT A

EXHIBIT B

Attached to that certain Surface Use Agreement
between the City of Midland, Texas, as "City"
and
HEP Fin-Tex/Trust River, L.P., as "Operator"

Remediation Plans

(see attached)

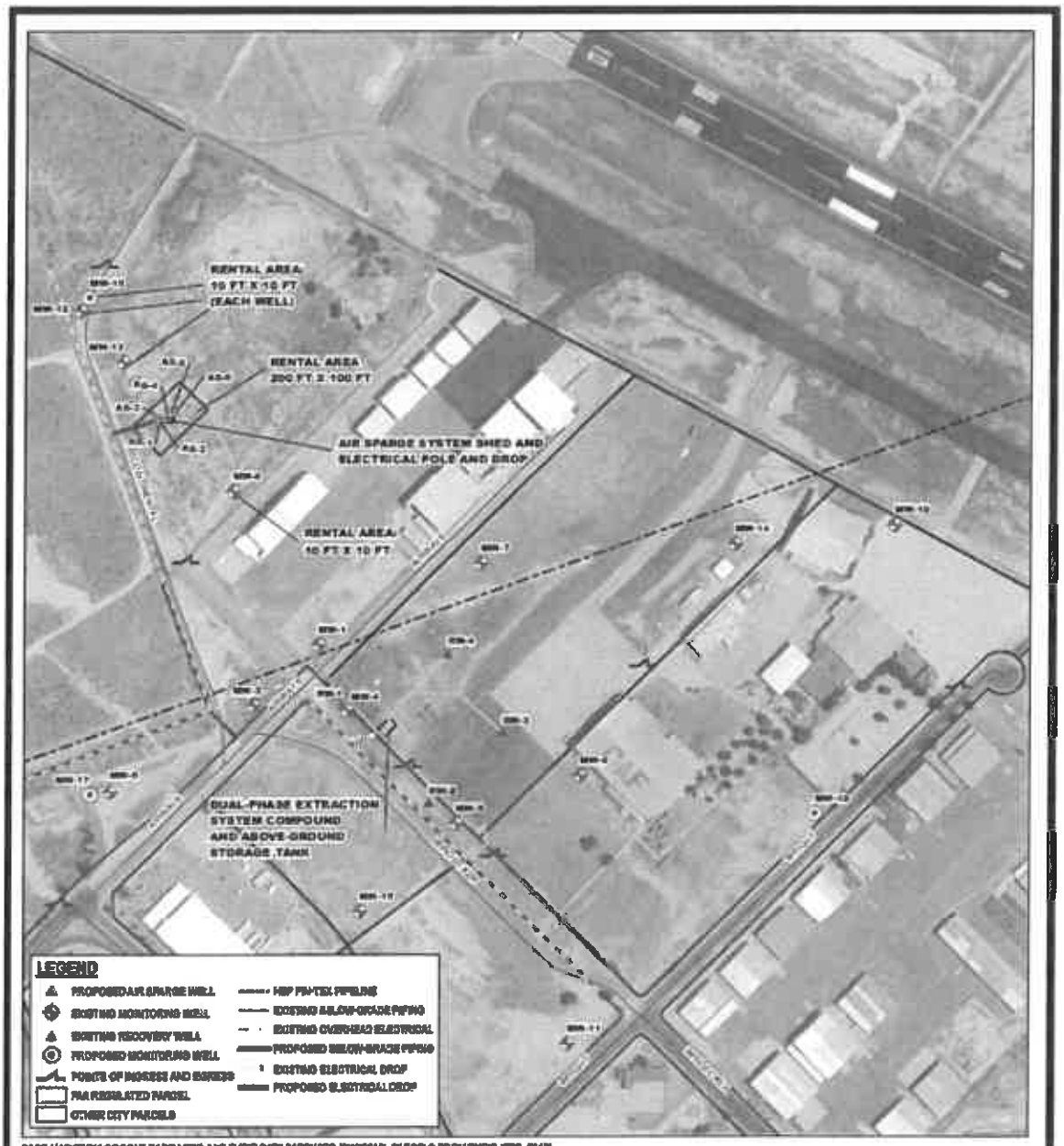
RENTAL AREA
10 FT X 10 FT
(EACH WELL)
RENTAL AREA
200 FT X 100 FT
AIR SPARGE SYSTEM SHED AND
ELECTRICAL POLE AND DROP
RENTAL AREA
10 FT X 10 FT
DUAL-PHASE EXTRACTION
SYSTEM COMPOUND
AND ABOVE-GROUND
STORAGE TANK
LEGEND
PROPOSED AIR SPARGE WELL
EXISTING MONITORING WELL
EXISTING RECOVERY WELL
PROPOSED MONITORING WELL
POINTS OF INGRESS AND EGRESS
FIN RESULATED PARCEL
OTHER CITY PARCELS
HEP FIN-TEX PIPELINE
EXISTING BELOW-GRADE PIPING
EXISTING OVERHEAD ELECTRICAL
PROPOSED BELOW-GRADE PIPING
EXISTING ELECTRICAL DROP
PROPOSED ELECTRICAL DROP
BASE MAP FROM GOOGLE EARTH PRO AND THEIR DATA PARTNERS (©2020 DigitalGlobe, Inc.)
N
1" = 400'
1:4,800
0
200
400
FEET
TRC
505 East Huntland Drive
Suite #250
Austin, TX 78752
Phone: 512.329.6080
PROJECT
HOLLY ENERGY PARTNERS FIN-TEX PIPELINE
MIDLAND, TEXAS
TITLE
REMEDIATION PLANS
DRAWN BY: MHORN
CHECKED BY: JWARD
APPROVED BY: BOLBERT
DATE: JANUARY 2020
PROJ. NO.: 363718
FILE: 363718_Exb.mxd
EXHIBIT B

EXHIBIT C

Attached to that certain Surface Use Agreement
between the City of Midland, Texas, as "City"
and
HEP Fin-Tex/Trust River, L.P., as "Operator"

Annual Fee

(see attached)

ANNUAL FEE

Item	Basis for Annual Fee	Proposed Annual Fee
"FAA REGULATED PARCEL" - Lot 4C, Block 11, Midland International Airport Industrial Park Addition 6 to the City of Midland		
Existing		
Monitor wells MW-8, MW-12, MW-13	$0.34 per sq ft* 100 sq ft per well** $34 per well	$102
Contemplated		
Air Sparge Wells, Air Sparge System Shed, Electrical Drop/Pole, and Air Sparge Hose (aboveground)	$0.34 per sq ft* 20,000 sq ft (200 ft by 100 ft)	$6,800
1 Monitor Well (MW-16)	$0.34 per sq ft* 100 sq ft per well** $34 per well	$34
Total Proposed Annual Fee – FAA Parcel		**$6,936**
"OTHER PARCELS" - Lot 2A, Block 11, Midland International Airport Industrial Park Addition to the City of Midland; Lots 3B, 4B, and 5B, Block 11, Midland International Airport Industrial Park Addition 6 to the City of Midland; and Lots 11A and 12A, Block 10, Midland International Airport Industrial Park Addition 7 to the City of Midland		
Existing		
Monitor wells MW-1, MW-3, MW-4, MW-5, MW-6, MW-7, MW-9, MW-10, MW-11, MW-14, MW-15	$500 per well	$5,500
Dual-phase extraction wells RW-1, RW-2, RW-3, RW-4	$500 per well	$2,000
Dual-phase extraction system compound, including above-ground storage tank	$500 per tank and system	$500
Contemplated		
2 Monitor Wells (MW-17 and MW-18)	$500 per well	$1,000
Total Proposed Annual Fee – Other Parcels		**$9,000**
TOTAL PROPOSED ANNUAL FEE – FAA REGULATED PARCEL AND OTHER PARCELS		**$15,936**

Notes

*FAA Parcel annual fee rate of $0.34 per square foot is based on Fair Market Rental Value in February 1, 2018, John C. Waggoner & Associates Appraisal Report.

**Actual well pad/vault area is only 1 to 4 square feet per well.

EXHIBIT D
Attached to that certain Surface Use Agreement
between the City of Midland, Texas, as "City"
and
HEP Fin-Tex/Trust River, L.P., as "Operator"

MEMORANDUM OF SURFACE USE AGREEMENT

STATE OF TEXAS §
§
COUNTY OF MIDLAND §

This Memorandum of Surface Use Agreement (this "Memorandum") is made and entered into by and between the **CITY OF MIDLAND, TEXAS**, whose address is 300 N. Loraine, Midland, Texas 79701, Attention: Right of Way Manager (herein "City"), and **HEP FIN-TEX/TRUST RIVER, L.P.**, a Texas limited partnership, whose address is 2828 N. Harwood, Suite 1300, Dallas, Texas 75201 (herein "Operator"), covering the surface estate of **Lot 2A, Block 11, Midland International Airport Industrial Park Addition to the City of Midland, and Lots 3B, 4B, 4C, and 5B, Block 11, Midland International Airport Industrial Park Addition 6 to the City of Midland, and Lots 11A and 12A, Block 10, Midland International Airport Industrial Park Addition 7 to the City of Midland, Midland County, Texas, and being more particularly depicted in Exhibit A attached hereto and incorporated herein for all purposes** (herein the "Surface Premises").

WITNESSETH:

City and Operator have entered into that certain Surface Use Agreement dated effective as of _____ __, 20__ (the "Surface Use Agreement") which provides the terms under which Operator may drill and/or maintain monitoring wells, recovery wells, air sparge wells, and other remediation wells (hereafter collectively referred to as the "Wells") and install and/or maintain a dual-phase extraction system, in-well integrated remediation systems, air sparge system, air compressors, a lockable storage shed and other associated equipment, sensors, structures and facilities (hereafter collectively referred to as the "Associated Facilities") for the purposes of tracking a spill of gasoline and diesel fuel from Operator's pipeline that occurred in September, 2009 (the "Spill"), treating affected groundwater, recovering hydrocarbons and/or affected groundwater from the subsurface, and housing certain Associated Facilities, and having the right of ingress and egress at certain points for such purpose.

City and Operator are executing this Memorandum for the purpose of placing the same of record in the above-referenced County, and in order to constitute constructive notice to all third parties dealing with City and/or Operator of the existence of the Surface Use Agreement and of the rights and obligations contained therein. City and Operator give notice that the Surface Use Agreement may be amended or supplemented from time to time in the future and any inquiry as to the contents thereof should also include an inquiry as to the contents of any and all such

amendments and supplements. In the event of any conflict between the terms of this Memorandum and the Surface Use Agreement, the terms of the Surface Use Agreement shall control.

The Surface Use Agreement constitutes the entire agreement between City and Operator concerning the subject matter thereof, superseding all negotiations, prior discussions and prior agreements and understandings related to the subject matter thereof, including, but not limited to, that certain right-of-way agreement dated February 23, 2010, as amended, between City and Operator (the "Right-of-Way Agreement").

This Memorandum shall be binding upon both parties signing a counterpart of this Memorandum, whether or not both parties sign the same counterpart hereof. To facilitate recordation, one or more executed counterparts of this Memorandum may be assembled into one document for recording purposes and a single counterpart containing additional signature and acknowledgment pages from the other counterparts may be executed and recorded.

IN WITNESS WHEREOF, this Memorandum is executed as of the dates of the acknowledgments of the respective parties, but effective as of _____ __, 20__.

CITY:

CITY OF MIDLAND, TEXAS

By:_____
Courtney Sharp, City Manager

ACKNOWLEDGMENT

STATE OF TEXAS §
§
COUNTY OF MIDLAND §

This instrument was acknowledged before me this ___ day of _____, 20__, by _____, _____ of the City of Midland, Texas, a home rule municipal corporation, on behalf of said entity.

_____
Notary Public – State of Texas

OPERATOR:

HEP FIN-TEX/TRUST RIVER, L.P.

By: _____
Mark Cunningham
Senior Vice President

STATE OF TEXAS §
§
COUNTY OF DALLAS §

BEFORE ME, the undersigned authority, on this day personally appeared Mark Cunningham, Senior Vice President of HEP Fin-Tex/Trust River, L.P., known to me to be the person and official whose name is subscribed to the foregoing instrument, and acknowledged to me that he executed the same as the act and deed of said entity, for the purposes and consideration therein expressed, and in the capacity therein stated.

GIVEN UNDER MY HAND AND SEAL OF OFFICE this the _____ day of _____, 2020.

_____
Notary Public – State of Texas

EXHIBIT A

Attached to that certain Memorandum of Surface Use Agreement
between the City of Midland, Texas, as "City"
and
HEP Fin-Tex/Trust River, L.P., as "Operator"

Surface Premises

(see attached)

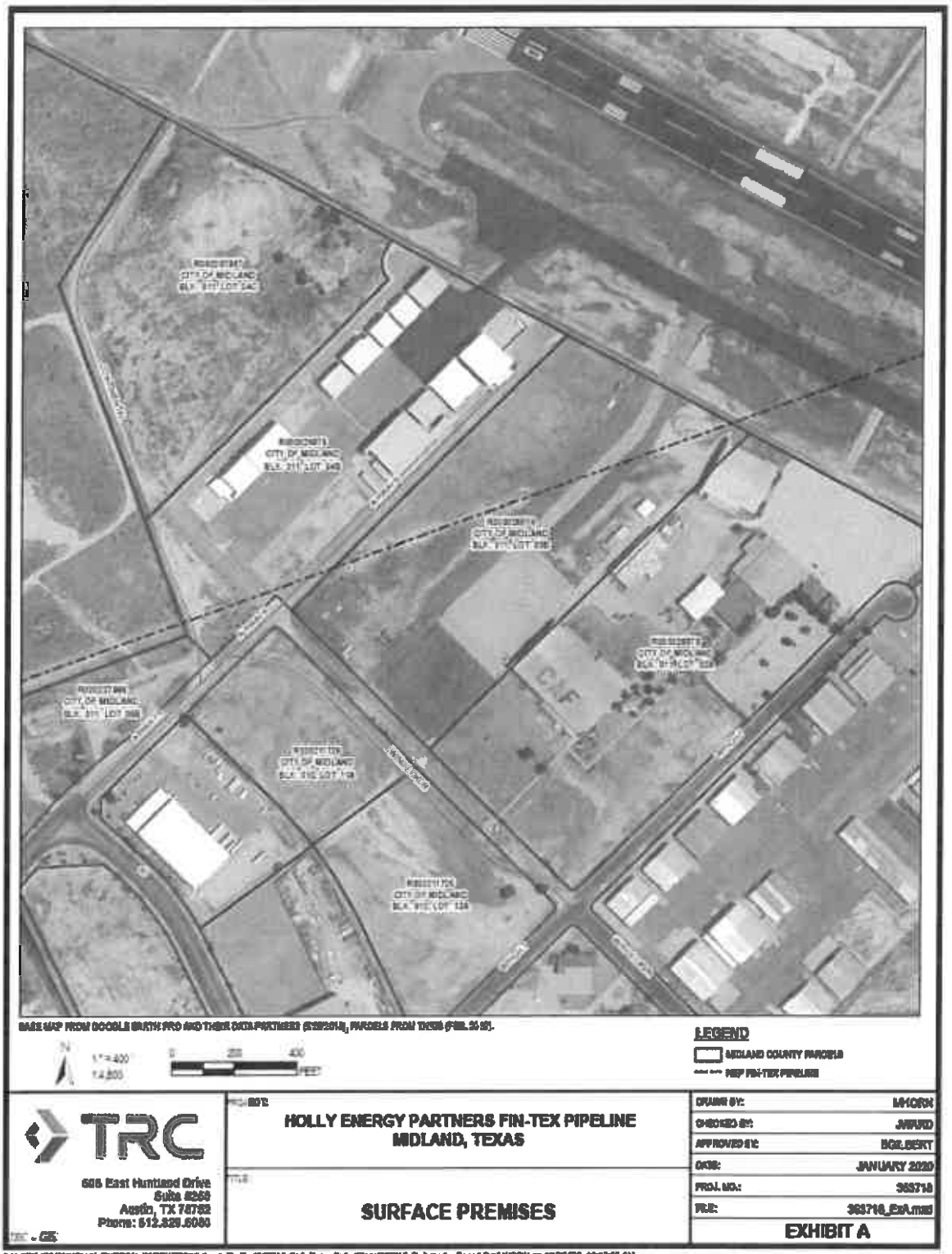
LEGEND
MIDLAND COUNTY PARCELS
HEP FIN-TEX PIPELINE
0
200
400
FEET
TRC
505 East Huntland Drive
Suite 8250
Austin, TX 78752
Phone: 512.329.6080
HOLLY ENERGY PARTNERS FIN-TEX PIPELINE
MIDLAND, TEXAS
SURFACE PREMISES
DRAWN BY:
MHORN
CHECKED BY:
JWARD
APPROVED BY:
BGILBERT
DATE:
JANUARY 2020
PROJ. NO.:
363718
FILE:
363718_Exh.mxd
EXHIBIT A

MEMORANDUM OF SURFACE USE AGREEMENT

STATE OF TEXAS §
§
COUNTY OF MIDLAND §

This Memorandum of Surface Use Agreement (this "Memorandum") is made and entered into by and between the **CITY OF MIDLAND, TEXAS**, whose address is 300 N. Loraine, Midland, Texas 79701, Attention: Right of Way Manager (herein "City"), and **HEP FIN-TEX/TRUST RIVER, L.P.**, a Texas limited partnership, whose address is 2828 N. Harwood, Suite 1300, Dallas, Texas 75201 (herein "Operator"), covering the surface estate of **Lot 2A, Block 11, Midland International Airport Industrial Park Addition to the City of Midland, and Lots 3B, 4B, 4C, and 5B, Block 11, Midland International Airport Industrial Park Addition 6 to the City of Midland, and Lots 11A and 12A, Block 10, Midland International Airport Industrial Park Addition 7 to the City of Midland, Midland County, Texas, and being more particularly depicted in Exhibit A attached hereto and incorporated herein for all purposes** (herein the "Surface Premises").

WITNESSETH:

City and Operator have entered into that certain Surface Use Agreement dated effective as of _____ __, 20__ (the "Surface Use Agreement") which provides the terms under which Operator may drill and/or maintain monitoring wells, recovery wells, air sparge wells, and other remediation wells (hereafter collectively referred to as the "Wells") and install and/or maintain a dual-phase extraction system, in-well integrated remediation systems, air sparge system, air compressors, a lockable storage shed and other associated equipment, sensors, structures and facilities (hereafter collectively referred to as the "Associated Facilities") for the purposes of tracking a spill of gasoline and diesel fuel from Operator's pipeline that occurred in September, 2009 (the "Spill"), treating affected groundwater, recovering hydrocarbons and/or affected groundwater from the subsurface, and housing certain Associated Facilities, and having the right of ingress and egress at certain points for such purpose.

City and Operator are executing this Memorandum for the purpose of placing the same of record in the above-referenced County, and in order to constitute constructive notice to all third parties dealing with City and/or Operator of the existence of the Surface Use Agreement and of the rights and obligations contained therein. City and Operator give notice that the Surface Use Agreement may be amended or supplemented from time to time in the future and any inquiry as to the contents thereof should also include an inquiry as to the contents of any and all such amendments and supplements. In the event of any conflict between the terms of this Memorandum and the Surface Use Agreement, the terms of the Surface Use Agreement shall control.

The Surface Use Agreement constitutes the entire agreement between City and Operator concerning the subject matter thereof, superseding all negotiations, prior discussions and prior agreements and understandings related to the subject matter thereof, including, but not limited to, that certain right-of-way agreement dated February 23, 2010, as amended, between City and Operator (the "Right-of-Way Agreement").

This Memorandum shall be binding upon both parties signing a counterpart of this Memorandum, whether or not both parties sign the same counterpart hereof. To facilitate recordation, one or more executed counterparts of this Memorandum may be assembled into one document for recording purposes and a single counterpart containing additional signature and acknowledgment pages from the other counterparts may be executed and recorded.

IN WITNESS WHEREOF, this Memorandum is executed as of the dates of the acknowledgments of the respective parties, but effective as of _____ __, 20__.

CITY:

CITY OF MIDLAND, TEXAS

By:_____
Courtney Sharp, City Manager

ACKNOWLEDGMENT

STATE OF TEXAS §
§
COUNTY OF MIDLAND §

This instrument was acknowledged before me this ___ day of _____, 2020, by Courtney Sharp, City Manager of the City of Midland, Texas, a home rule municipal corporation, on behalf of said entity.

_____
Notary Public – State of Texas

OPERATOR:

HEP FIN-TEX/TRUST RIVER, L.P.

By: _____
Mark Cunningham
Senior Vice President

STATE OF TEXAS §
§
COUNTY OF DALLAS §

BEFORE ME, the undersigned authority, on this day personally appeared Mark Cunningham, Senior Vice President of HEP Fin-Tex/Trust River, L.P., known to me to be the person and official whose name is subscribed to the foregoing instrument, and acknowledged to me that he executed the same as the act and deed of said entity, for the purposes and consideration therein expressed, and in the capacity therein stated.

GIVEN UNDER MY HAND AND SEAL OF OFFICE this the 16 day of April, 2020.

_____
Notary Public – State of Texas

NOTARY PUBLIC STATE OF TEXAS
BERNICE BLUDAU
Notary ID - 452259-1
My Commission Expires
July 16, 2022

EXHIBIT A

Attached to that certain Memorandum of Surface Use Agreement
between the City of Midland, Texas, as "City"
and
HEP Fin-Tex/Trust River, L.P., as "Operator"

Surface Premises

(see attached)

BASE MAP FROM GOOGLE EARTH PRO AND THEIR DATA PARTNERS (5/29/2018), PARCELS FROM TNRIS (FEB. 2019).

N

1 " = 400 '
1:4,800

0 200 400
FEET

LEGEND

MIDLAND COUNTY PARCELS
HEP FIN-TEX PIPELINE

TRC

505 East Huntland Drive
Suite #250
Austin, TX 78752
Phone: 512.329.6080

TRC - GIS

PROJECT:
HOLLY ENERGY PARTNERS FIN-TEX PIPELINE
MIDLAND, TEXAS

TITLE:
SURFACE PREMISES

DRAWN BY:	MHORN
CHECKED BY:	JWARD
APPROVED BY:	BGILBERT
DATE:	JANUARY 2020
PROJ. NO.:	363718
FILE:	363718_ExA.mxd

EXHIBIT A

S:\1-PROJECTS\HOLLY_ENERGY_PARTNERS\Midland_Fin-Tex\363718_Ph1_RemediationPlans\363718_ExA.mxd – Saved By: MHORN on 1/27/2020, 10:18:00 AM

City Council Agenda

Approved for Agenda:

City Manager's Office

MEETING DATE: April 28, 2020

TO: City Council / City Manager

FROM: Elizabeth Shaughnessy, Senior Planner

SUBJECT: Consider an ordinance on second reading on a request by the YMCA of Midland for a vacation of a 0.2825-acre portion of alley right-of-way, located adjacent to Lot 2, Block 19, Elmwood Addition, Section 3, and Lots 1 through 12, Block 6, S. W. Estes Addition, City and County of Midland, Texas. (Generally located on the north side of W. Kansas Avenue, approximately 481-feet east of N. Big Spring Street. Council District 2)

Purpose:

The applicant, YMCA of Midland, is requesting to vacate a 0.2825-acre portion of alley right-of-way, located adjacent to Lot 2, Block 19, Elmwood Addition, Section 3, and Lots 1 through 12, Block 6, S. W. Estes Addition, City and County of Midland, Texas, for future expansion.

Recommended Planning and Zoning Commission Action:

☒ Approve ☐ Deny ☐ Direction/Informational

Fiscal Impact:

The 2020 appraised value of the right-of-way is $2.00 per square feet, for a total value of $24,608.00 for the 0.2825 – acre portion of alley right-of-way, located adjacent to Lot 2, Block 19, Elmwood Addition, Section 3, and Lots 1 through 12, Block 6, S. W. Estes Addition.

Discussion:

The applicant, YMCA of Midland, is requesting to vacate a 0.2825-acre portion of alley right-of-way, located adjacent to Lot 2, Blocks 19, Elmwood Addition, Section 3, and Lots 1 through 12, Block 6, S. W. Estes Addition, City and County of Midland, Texas, for future expansion.

The Midland Central's Appraisal District's appraisal of the land is $2.00 per square feet, for a total value of $24,608.00 for the 0.496 - acre portion of alley right-of-way, located adjacent to Blocks 19 and 6, Elmwood Addition, Section 3.

The applicant will need to retain a nonexclusive utility easement for all affected utilities until each existing easement user abandons its use of the easement and replat the property prior to the alley right-of-way being vacated.

This request has been circulated and reviewed by all pertinent City departments and franchise utility companies. Their comments, conditions, and requests are as follows:

Code Compliance: (Approved)

No Oil or Gas wells identified within 500 ft. permitted well radius or in the 135 ft. non-permitted well radius of location on plat.

Code Administration: (Approved)

No objections.

Engineering: (Approved)

No objections to vacation. Applicant shall be responsible for relocating any utilities, if existing, or providing easements as needed.

Fire: (Approved)

No objections.

Transportation: (Denied)

No issue with concept of vacating, but as proposed, this creates a dead end alley to the north which will be an issue if the YMCA ever sells those lots. Alley should be vacated all the way to Cuthbert. If adjacent property owner on west side is not agreeable, then dedicate new ROW to turn remaining north alley to the east to access Whitaker.

Applicant shall be responsible for relocating any utilities, if existing, or providing easements as needed.

Midland Central Appraisal District:

The estimated value of the property vacation requested is $2.00 per square feet or $24,608.00 for tax year 2020.

AT&T: (Approved with conditions)

AT&T does have facilities in this area and it would be at the cost of the customer to relocate the facilities before any vacation of an alley could be done. However, is ok to

vacate is a utility easement is in place and as long as there isn't a time limit on it and we have to move after a certain time.

Atmos: (Approved)

Atmos Energy has no objection to the above referenced change to the alley right of way between Big Spring and Main Street north of Kansas Ave. We have no gas lines or facilities located within this section of right of way.

Grande: (Approved with Conditions)

Grande Communications does have both Aerial Coax facilities in the Right-Of-Way Segment known as Vacate V-20-0027. Costs to relocate our facilities can be provided upon request. However, is ok to vacate is a utility easement is in place and as long as Grande was allowed easy access for maintenance purposes. We would be opposed to being locked out or having to ask for permission to do repair and maintenance of our existing plant.

Oncor: (Approved with Conditions)

I had one of my people look at this today. He advised me we have an overhead line in the alley. I will drive by and look at it myself this afternoon, but after speaking with him, we will not be able to vacate the alley way without an easement for our facilities.

Suddenlink: (Approved with Conditions)

We have multiple coax plant in this area, we will need to do a cost estimate to see what it'll cost to relocate & who will pay for it, we are not vacating anything unless someone pays to relocate. However, should be ok, as long as the vacate request is put on hold until such a time as to work out payment details.

Planning:

Pertinent City departments and franchise utility companies have reviewed this vacation request and have approved it with the condition that a utility easement is retained until each existing easement user abandons its use of the easement.

This request was approved at the April 14, 2020 City Council meeting with the amendment that the vacation fee be waived.

Therefore, staff recommends approval for the vacation of the 0.2825-acre portion of alley right-of-way, located adjacent to Lot 2, Block 19, Elmwood Addition, Section 3, and Lots 1 through 12, Block 6, S. W. Estes Addition, City and County of Midland, Texas, subject to conditions A through C.

Conditions:

A. **That the City retains a nonexclusive utility easement until each existing easement user abandons its use of the easement; and**

B. **That the city of Midland has received from the property owner the sum of $24,608.00**

C. **That a replat of the subject property is approved by the City of Midland and filed and recorded with the County Clerk of Midland County.**

Letters of Objection:

As of April 8, 2020, staff has not received any letters of objection to this request.

Attachments:

Application
Maps
Metes and Bounds (Exhibit A)
Vacation Exhibit
Responses from Franchise Utility Companies and Midland Central Appraisal District

ORDINANCE NO. _____

AN ORDINANCE VACATING AND ABANDONING A 0.2825-ACRE PORTION OF ALLEY RIGHT-OF-WAY LOCATED ADJACENT TO LOT 2, BLOCK 19, ELMWOOD ADDITION, SECTION 3, AND LOTS 1 THROUGH 12, BLOCK 6, S. W. ESTES ADDITION, CITY AND COUNTY OF MIDLAND, TEXAS (GENERALLY LOCATED ON THE NORTH SIDE OF WEST KANSAS AVENUE, APPROXIMATELY 481 FEET EAST OF NORTH BIG SPRING STREET); ADOPTING THE APPRAISAL BY THE CITY MANAGER OF $24,608.00; AND ORDERING RECORDATION BY THE CITY SECRETARY

WHEREAS, it has been determined by the Midland City Council that a 0.2825-acre portion of alley right-of-way located adjacent to Lot 2, Block 19, Elmwood Addition, Section 3, and Lots 1 through 12, Block 6, S. W. Estes Addition, City and County of Midland, Texas, as described in Exhibits "A" and "B" attached hereto and made a part hereof for all legal purposes (the "Property"), is no longer needed for public use; and

WHEREAS, Section 272.001 of the Texas Local Government Code provides that a political subdivision may not convey, sell, or exchange its interest in land without observing notice and bid requirements, unless the conveyance is to one or more abutting property owners; and

WHEREAS, an application for vacating the Property has been received by the City from the abutting property owner; and

WHEREAS, the City Manager has appraised the value of the City's property interest in the Property at $24,608.00, as shown in Exhibit "C" attached hereto and incorporated herein by reference; and

WHEREAS, the Council finds it to be in the public interest to abandon and vacate the Property;

NOW, THEREFORE, BE IT ORDAINED BY THE CITY COUNCIL OF THE CITY OF MIDLAND, TEXAS:

SECTION ONE. That the Property is hereby vacated and abandoned for all public

purposes. Provided, however, that the City is hereby abandoning only the public interest in the Property, and this ordinance in no way affects any private easement or access easement which abutting property owners may have in the Property.

SECTION TWO. That this ordinance shall not be effective until a replat of the Property is approved by the City of Midland and filed and recorded with the County Clerk of Midland County, Texas.

SECTION THREE. That the fee of $24,608.00 is hereby waived; provided, however, that the abutting property owner shall spend a minimum of $24,608.00 to provide child care services.

SECTION FOUR. That the City herein retains a nonexclusive utility easement across, through, over, under, on and along the Property until all entities that were using the Property for utility purposes as of the date of approval of this ordinance have abandoned their uses of the Property.

SECTION FIVE. That the City Secretary is hereby authorized and directed to file a certified copy of this ordinance with the County Clerk of Midland County, Texas, for purposes of recording in the Official Records of Midland County, Texas.

The above and foregoing ordinance was duly proposed, read in full and adopted on first reading, the _____ day of _____, A.D., 2020; and passed to second reading on motion of Council member _____, seconded by Council member _____, by the following vote:

Council members voting "AYE":

Council members voting "NAY":

The above and foregoing ordinance was read in full and finally adopted by the following vote upon motion of Council member _____, seconded by Council member _____, on the _____ day of _____, A.D., 2020, at a regular

meeting of the City Council:

Council members voting "AYE":

Council members voting "NAY":

PASSED AND APPROVED THIS _____ day of _____, A.D., 2020.

_____
Patrick N. Payton, Mayor

ATTEST:

_____
Amy M. Turner, City Secretary

APPROVED AS TO CONTENT
AND COMPLETENESS:

_____
Robert Patrick, Assistant City Manager

_____
Charles Harrington, Director of Development Services

APPROVED ONLY AS TO FORM:

_____
John Ohnemiller, City Attorney

EXHIBIT 'A'

METES AND BOUNDS

BEING a 0.2825 acre tract of land situated in Section 26, Block 39, Township 1 South, T & P RR Co. Survey, Miguel Gil Survey, Abstract No. 438, Midland County, Texas, said tract being a part of a 10 foot Alley as dedicated by S.W. Estes Addition, an addition to the City of Midland, Texas, as recorded in Volume 40, Page 93, Deed Records, Midland County, Texas (D.R.M.C.T.), said tract also being part of a 10 foot Alley as dedicated by Elmwood Addition, Section 3, an addition to the City of Midland, Texas, as recorded in Cabinet D, Page 41, Plat Records, Midland County, Texas (P.R.M.C.T), said 0.2825 acre tract being more particularly described as follows:

BEGINNING at the southwest corner of said 10 foot Alley (Elmwood Addition) and the southeast corner of Lot 2, Block 19 of said Elmwood Addition, said corner being on the north right-of-way line of Kansas Avenue, from which a found 5/8-inch iron rod bears South 66 degrees 32 minutes 06 seconds East, a distance of 0.20 feet, said corner being locatable by NAD83 Grid Coordinate N= 10,697,179.47, E= 1,756,122.58;

THENCE North 14 degrees 20 minutes 44 seconds West, departing said north right-of-way line and along the east line of said Lot 2, a distance of 611.36 feet to the northeast corner of said Lot 2 and the southeast corner of Lot 1, Block 19 of said Elmwood Addition, from which a found 1/2-inch iron rod bears South 75 degrees 40 minutes 57 seconds West, a distance of 0.22 feet;

THENCE North 75 degrees 40 minutes 57 seconds East, departing the east line of said Lot 2, a distance of 10.00 feet to a point for corner on the east line of said 10 foot Alley (Elmwood Addition) and the west line of said 10 foot Alley (S.W. Estes Addition);

THENCE North 14 degrees 20 minutes 44 seconds West, along said common Alley line, a distance of 2.49 feet to a point for corner;

THENCE North 75 degrees 40 minutes 57 seconds East, departing said common Alley line, a distance of 10.00 feet to a point for corner on the east line of said 10 foot Alley (S.W. Estes Addition) and the northwest corner Lot 12, Block 6 of said S.W. Estes Addition, from which a found 5/8-inch iron rod with a cap stamped “WEST CO.” bears North 14 degrees 20 minutes 44 seconds West, a distance of 415.00 feet;

THENCE South 14 degrees 20 minutes 44 seconds East, along the east line of said 10 foot Alley (S.W. Estes Addition) and the west line of Lots 1-12 of said S.W. Estes Addition, a distance of 619.01 feet to a found 2-inch iron pipe for the southeast corner of said 10 foot Alley (S.W. Estes Addition) and the southwest corner of said Lot 1 of said S.W. Estes Addition, said corner being on the north right-of-way line of Kansas Avenue;

THENCE North 89 degrees 49 minutes 18 seconds West, along said north right-of-way line, a distance of 20.66 feet to the POINT OF BEGINNING and containing 12,304 square feet or 0.2825 acres of land, more or less.

NOTE: The basis of bearing for this survey is the Texas State Plane Coordinate System, Central Zone, (NAD 83) based upon GPS measurements. Distances and areas are surface values. A Grid factor of 0.999899 was used for this project.

B006170.001

A plat of even date accompanies this metes and bounds description.

DUNAWAY
550 Bailey Avenue • Suite 400 • Fort Worth, Texas 76107
Tel: 817.335.1121
FIRM REGISTRATION 10096100

STATE OF TEXAS
REGISTERED
HAL MOLLENKOPF
5439
PROFESSIONAL
LAND SURVEYOR

04-06-2020

VACATION EXHIBIT
0.2825 ACRES or 12,304 SQ. FT.

10 FOOT WIDTH ALLEY,ELMWOOD ADDITION,
SECTION 3,
CABINET D, PAGE 41, P.R.M.C.T.
AND
10 FOOT WIDTH ALLEY, S.W. ESTES ADDITION,
VOLUME 40, PAGE 93, D.R.M.C.T.
ABSTRACT NO. 438, CITY OF MIDLAND,
MIDLAND COUNTY, TX

PLOTTED BY: James Gardella ON: Monday, April 06, 2020 AT: 2:05 PM FILEPATH: G:\Production4000\006100\6170\001\Survey\Drawings\B006170.001 - YMCA VACATION.dwg

EXHIBIT 'B'

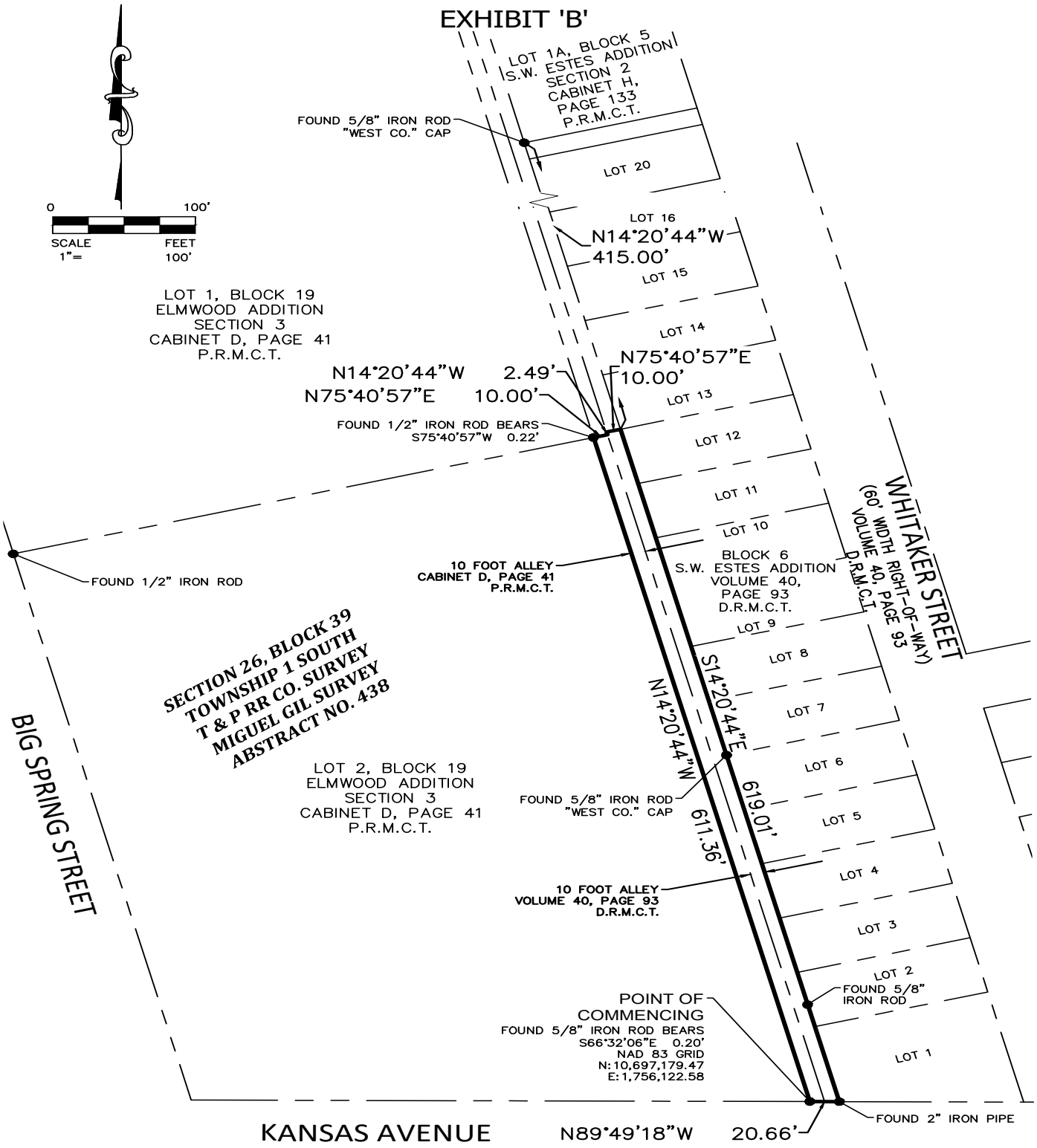

NOTE: The basis of bearing for this survey is the Texas State Plane Coordinate System, Central Zone, (NAD 83) based upon GPS measurements. Distances and areas are surface values. A Grid factor of 0.999899 was used for this project.

B006170.001

A metes and bounds description of even date accompanies this plat.

DUNAWAY
550 Bailey Avenue • Suite 400 • Fort Worth, Texas 76107
Tel: 817.335.1121
FIRM REGISTRATION 10096100

STATE OF TEXAS
REGISTERED
HAL MOULENKOPF
5439
PROFESSIONAL
LAND SURVEYOR

04-06-2020

VACATION EXHIBIT
0.2825 ACRES or 12,304 SQ. FT.

10 FOOT WIDTH ALLEY,ELMWOOD ADDITION,
SECTION 3,
CABINET D, PAGE 41, P.R.M.C.T.
AND
10 FOOT WIDTH ALLEY, S.W. ESTES ADDITION,
VOLUME 40, PAGE 93, D.R.M.C.T.
ABSTRACT NO. 438, CITY OF MIDLAND,
MIDLAND COUNTY, TX

PLOTTED BY: James Gardella ON: Monday, April 06, 2020 AT: 2:10 PM FILEPATH: G:\Production4000\006100\6170\001\Survey\Drawings\B006170.001 - YMCA VACATION.dwg

MIDLAND
Feel the Energy!

Office of the City Manager

April 3, 2020

Midland City Council
City of Midland, Texas

RE: Request for vacation of a 0.2825-acre portion of alley right-of-way located adjacent to Lot 2, Block 19, Elmwood Addition, Section 3, and Lots 1 through 12, Block 6, S. W. Estes Addition, City and County of Midland, Texas

Dear Members of the City Council:

The above-referenced property has been appraised in accordance with Chapter 272 of the Texas Local Government Code. The fair market value of the property is $24,608.00. The property can be vacated and recorded in the Midland County Clerk's office when the City of Midland has received this amount from the adjoining property owner(s).

Very truly yours,

Courtney Sharp
City Manager

EXHIBIT "C"

EXHIBIT 'A'

METES AND BOUNDS

BEING a 0.2825 acre tract of land situated in Section 26, Block 39, Township 1 South, T & P RR Co. Survey, Miguel Gil Survey, Abstract No. 438, Midland County, Texas, said tract being a part of a 10 foot Alley as dedicated by S.W. Estes Addition, an addition to the City of Midland, Texas, as recorded in Volume 40, Page 93, Deed Records, Midland County, Texas (D.R.M.C.T.), said tract also being part of a 10 foot Alley as dedicated by Elmwood Addition, Section 3, an addition to the City of Midland, Texas, as recorded in Cabinet D, Page 41, Plat Records, Midland County, Texas (P.R.M.C.T), said 0.2825 acre tract being more particularly described as follows:

BEGINNING at the southwest corner of said 10 foot Alley (Elmwood Addition) and the southeast corner of Lot 2, Block 19 of said Elmwood Addition, said corner being on the north right-of-way line of Kansas Avenue, from which a found 5/8-inch iron rod bears South 66 degrees 32 minutes 06 seconds East, a distance of 0.20 feet, said corner being locatable by NAD83 Grid Coordinate N= 10,697,179.47, E= 1,756,122.58;

THENCE North 14 degrees 20 minutes 44 seconds West, departing said north right-of-way line and along the east line of said Lot 2, a distance of 611.36 feet to the northeast corner of said Lot 2 and the southeast corner of Lot 1, Block 19 of said Elmwood Addition, from which a found 1/2-inch iron rod bears South 75 degrees 40 minutes 57 seconds West, a distance of 0.22 feet;

THENCE North 75 degrees 40 minutes 57 seconds East, departing the east line of said Lot 2, a distance of 10.00 feet to a point for corner on the east line of said 10 foot Alley (Elmwood Addition) and the west line of said 10 foot Alley (S.W. Estes Addition);

THENCE North 14 degrees 20 minutes 44 seconds West, along said common Alley line, a distance of 2.49 feet to a point for corner;

THENCE North 75 degrees 40 minutes 57 seconds East, departing said common Alley line, a distance of 10.00 feet to a point for corner on the east line of said 10 foot Alley (S.W. Estes Addition) and the northwest corner Lot 12, Block 6 of said S.W. Estes Addition, from which a found 5/8-inch iron rod with a cap stamped “WEST CO.” bears North 14 degrees 20 minutes 44 seconds West, a distance of 415.00 feet;

THENCE South 14 degrees 20 minutes 44 seconds East, along the east line of said 10 foot Alley (S.W. Estes Addition) and the west line of Lots 1-12 of said S.W. Estes Addition, a distance of 619.01 feet to a found 2-inch iron pipe for the southeast corner of said 10 foot Alley (S.W. Estes Addition) and the southwest corner of said Lot 1 of said S.W. Estes Addition, said corner being on the north right-of-way line of Kansas Avenue;

THENCE North 89 degrees 49 minutes 18 seconds West, along said north right-of-way line, a distance of 20.66 feet to the POINT OF BEGINNING and containing 12,304 square feet or 0.2825 acres of land, more or less.

NOTE: The basis of bearing for this survey is the Texas State Plane Coordinate System, Central Zone, (NAD 83) based upon GPS measurements. Distances and areas are surface values. A Grid factor of 0.999899 was used for this project.

B006170.001

A plat of even date accompanies this metes and bounds description.

DUNAWAY
550 Bailey Avenue • Suite 400 • Fort Worth, Texas 76107
Tel: 817.335.1121
FIRM REGISTRATION 10098100

STATE OF TEXAS
REGISTERED
HAL MOLLENKOPF
5439
PROFESSIONAL
LAND SURVEYOR

04-06-2020

VACATION EXHIBIT
0.2825 ACRES or 12,304 SQ. FT.

10 FOOT WIDTH ALLEY,ELMWOOD ADDITION,
SECTION 3,
CABINET D, PAGE 41, P.R.M.C.T.
AND
10 FOOT WIDTH ALLEY, S.W. ESTES ADDITION,
VOLUME 40, PAGE 93, D.R.M.C.T.
ABSTRACT NO. 438, CITY OF MIDLAND,
MIDLAND COUNTY, TX

PLOTTED BY: James Cardella ON: Monday, April 06, 2020 AT: 2:05 PM FILEPATH: G:\Production4000\006100\6170\001\Survey\Drawings\B006170.001 - YMCA VACATION.dwg

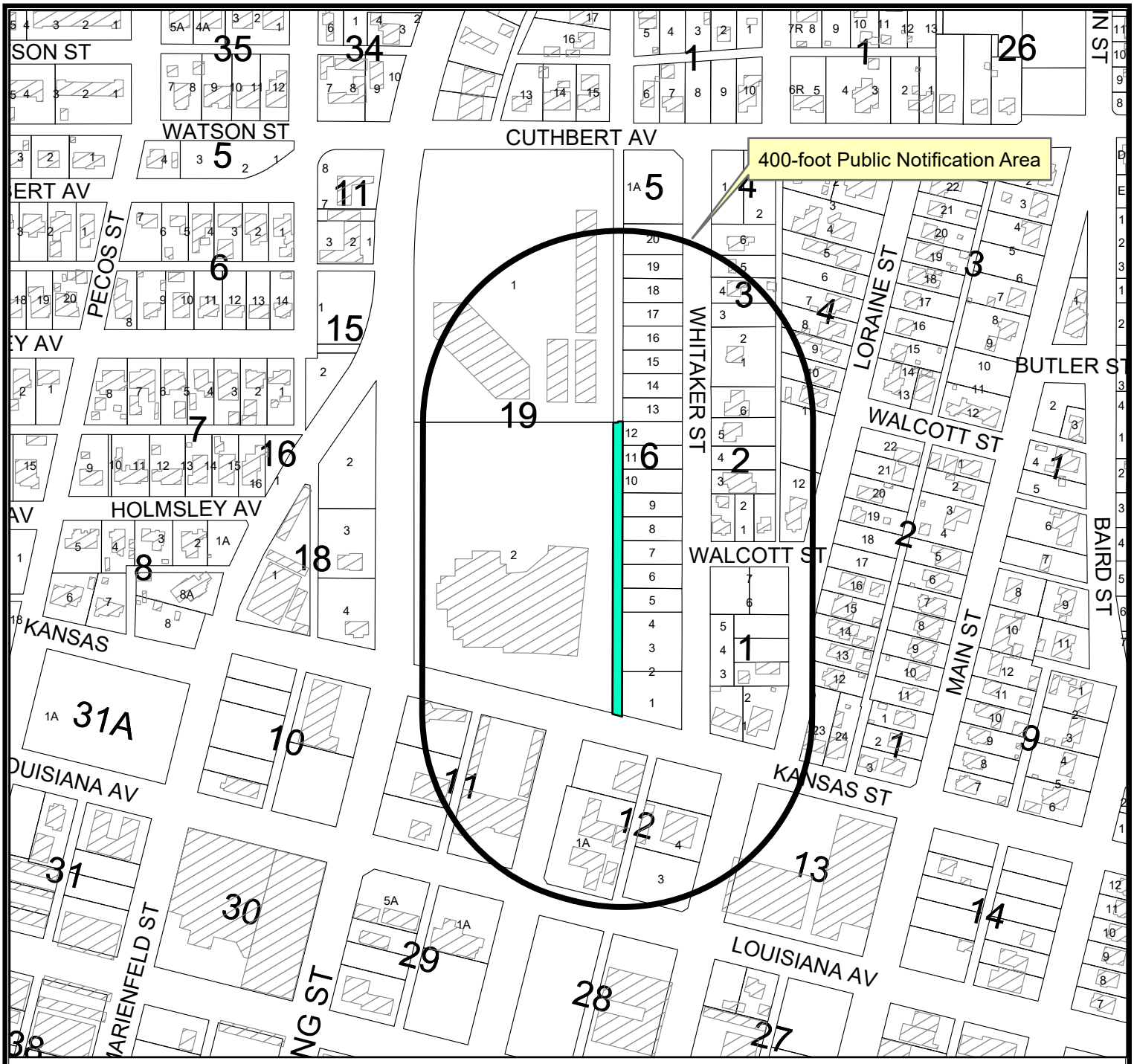

LOCATION MAP

V-20-0027 **Scale: 1" = 300'**

Consider a request for a vacation of a 0.2825-acre portion of alley right-of-way, located adjacent to Lot 2, Block 19, Elmwood Addition, Section 3, and Lots 1 through 12, Block 6, S. W. Estes Addition, City and County of Midland, Texas.

Generally located on the north side of W. Kansas Avenue, approximately 481-feet east of N. Big Spring Street. (Council District 2)

LEGEND

- CITY LIMITS
- PARCEL
- PRIVATE BLDGS

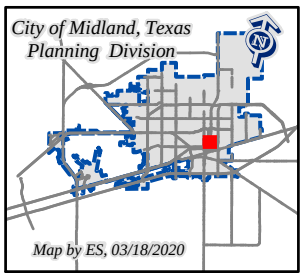

MIDLAND
Planning Division

Vacate Right-of-Way/Public Utility Easement/Land/Street Application

Project Number: V-20-0027

Case Number: _____

Applicant *(if acting as Agent, see affidavit on page 2)* Printed Name: YMCA of Midland		Phone (432) 682-2551 Email: Cthomas@midlandymca.org	
Address 300. N. Big Spring St	City Midland	State Tx	Zip 79701

Application is hereby made to the City Council to vacate the following:

- ☒ Right-of-Way
- ☐ Public Utility Easement
- ☐ Land
- ☐ Street

Description of Address: YMCA - Community recreation & Youth Services Elmwood 3rd Addition Lot 2 Block 19 & SW Estates Addition Lot 1-12 Block 16

Reason for Request: Future Expansion

Reasons, in applicant's opinion, why the requested vacation will not adversely affect the public welfare or will contribute to it in a positive way: We own both property on either side of Alleyway

Submittal and Fees

Items to be submitted with this application form:

- Application Fee – Payable to the 'City of Midland'
- Sealed metes and bounds description of the property to be vacated (included on the map) and total square feet of vacation. Include ownership, legal and deed information for adjacent property owners
- Digital Copies of Survey (PDF/JPEG)

Utility Company Approval

Clearance is needed from the following utility companies:

- City of Midland
- AT&T
- Atmos Energy
- Suddenlink Cable TV Co.
- Oncor Electric
- Grande Communications

The City will route the request to these companies, but it is the applicant's responsibility to ensure clearance has been obtained to resolve any issues that may arise.

RECEIVED
MAR 13 2020
EM

Policies

1. If the vacation request involves only a portion of a section right-of-way, such that approval would not affect the public's ability to travel along said right-of-way, then the request will be scheduled for consideration by the City Council. No public hearing will be needed.

2. If the vacation request involves an entire section of right-of-way, such that approval would cause the public to lose all rights to use it, then the following procedures apply:

   a. Nearby land owners who have a reasonable expectation to use said right-of-way, as determined by the Transportation Division, must first agree to the proposed vacation. It is the applicant's responsibility to obtain a letter of concurrence signed by the affected landowners.

   b. If all letters are received indicating that the affected landowners agree to the request, then a public hearing before the City Council will be scheduled. The Transportation Division will mail public notice of the hearing to landowners within 400 feet of the affected right-of-way.

   c. If a request is approved, the right-of-way shall be divided into two equal parts, with each half becoming the property of the respective abutting owner. If the applicant desires to own the entire width, he or she must negotiate with the opposite landowner.

Signatures Christine R. Bearden		
Applicant (signature): Christine R Bearden		Date: 3-13-2020
Affected Property Owners:		
Signature:	Print:	Date:
Signature:	Print:	Date
Signature:	Print:	Date
Signature:	Print:	Date

The Vacation of right-of-way/public utility easement/land/street shall be considered officially received in the Planning office only when it has been submitted in full compliance with the provisions of Section 212 of the Texas Local Government Code and the Zoning Code of Ordinances of the City of Midland and when such required items for the application are also received.

All materials, including exhibits, submitted in support of an application, or displayed during a public hearing, shall remain the property of the City of Midland.

FOR OFFICE USE ONLY

☑ 1 FOLDED Copy of Survey ☐ Survey in Digital Format (PDF/JPEG)

☑ Application Fee

Check # 40126

Received By: EM	Date:

RECEIVED
MAR 13 2020

****Application will not be considered for scheduling until reviewed by a planner.****

EXHIBIT 'B'

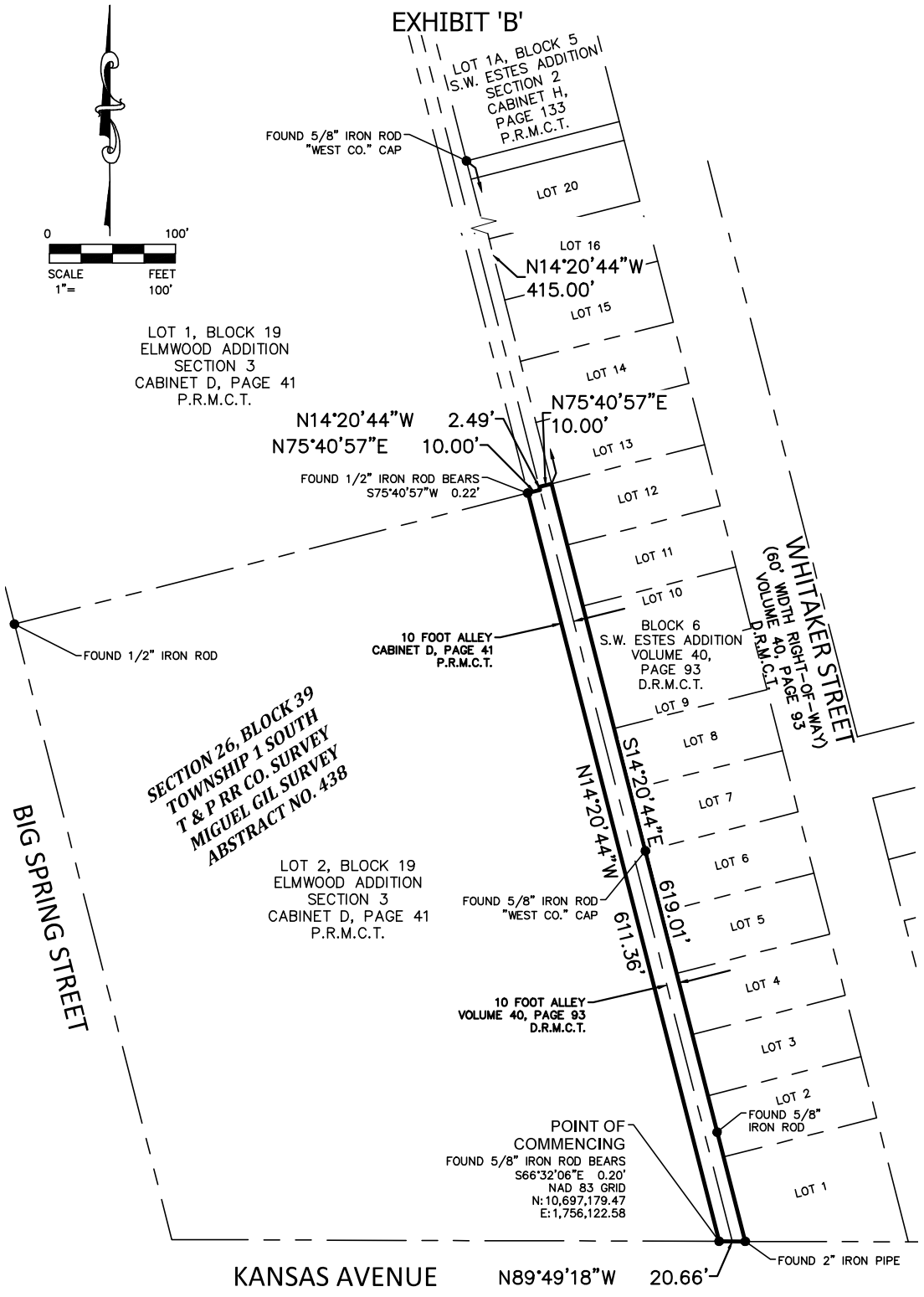

NOTE: The basis of bearing for this survey is the Texas State Plane Coordinate System, Central Zone, (NAD 83) based upon GPS measurements. Distances and areas are surface values. A Grid factor of 0.999899 was used for this project.

B006170.001

A metes and bounds description of even date accompanies this plat.

DUNAWAY
550 Bailey Avenue • Suite 400 • Fort Worth, Texas 76107
Tel: 817.335.1121
FIRM REGISTRATION 10098100

STATE OF TEXAS
REGISTERED
HAL MOLENKOPF
5439
PROFESSIONAL
LAND SURVEYOR

04-06-2020

VACATION EXHIBIT
0.2825 ACRES or 12,304 SQ. FT.

10 FOOT WIDTH ALLEY,ELMWOOD ADDITION,
SECTION 3,
CABINET D, PAGE 41, P.R.M.C.T.
AND
10 FOOT WIDTH ALLEY, S.W. ESTES ADDITION,
VOLUME 40, PAGE 93, D.R.M.C.T.
ABSTRACT NO. 438, CITY OF MIDLAND,
MIDLAND COUNTY, TX

PLOTTED BY: James Cardella ON: Monday, April 06, 2020 AT: 2:10 PM FILEPATH: G:\Production4000\006100\6170\001\Survey\Drawings\B006170.001 - YMCA VACATION.dwg

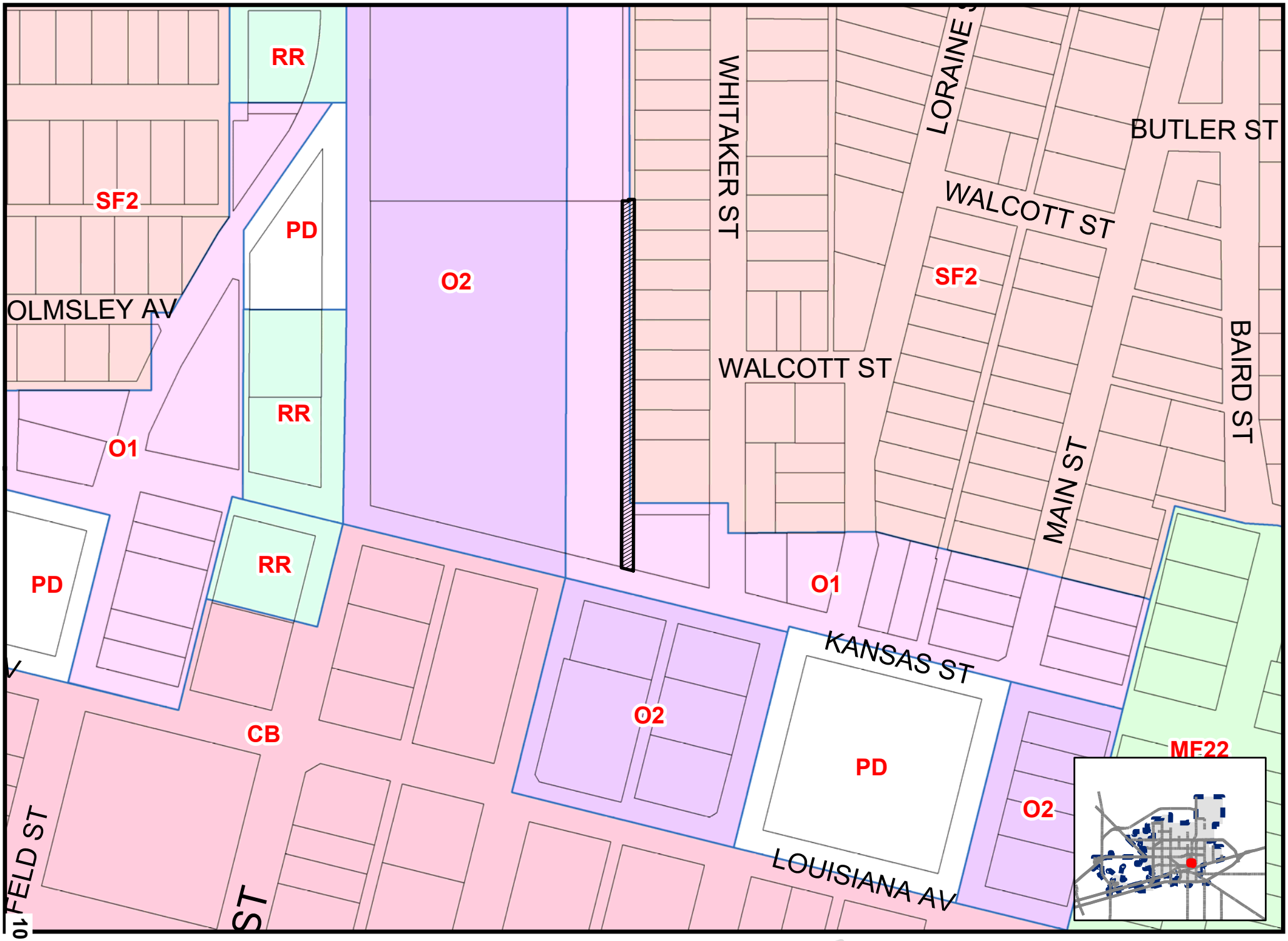

10.16

Map By ES, 3/18/2020

V-20-0027

Scale: 1" = 200'

ZONING MAP

Elizabeth Shaughnessy

From: Luis Montez <luis.montez@AlticeTechServicesUSA.com>
Sent: Wednesday, April 1, 2020 2:06 PM
To: Elizabeth Shaughnessy
Subject: RE: External E-mail - RE: Vacation Request - The YMCA of Midland

Should be ok, as long as the vacate request is put on hold until such a time as to work out payment details.

From: Elizabeth Shaughnessy <eshaughnessy@midlandtexas.gov>
Sent: Wednesday, April 1, 2020 1:56 PM
To: Luis Montez <luis.montez@AlticeTechServicesUSA.com>
Subject: FW: External E-mail - RE: Vacation Request - The YMCA of Midland

[External Email]

Caution: This email originated outside of Altice USA. Please do not click links or attachments unless you recognize the sender and know the content is safe.

Good Afternoon,

I was checking in to see if you got my last email and to know if you are ok with the easement?

Thank you!

Elizabeth

From: Elizabeth Shaughnessy
Sent: Friday, March 27, 2020 2:58 PM
To: Luis Montez <luis.montez@AlticeTechServicesUSA.com>
Subject: RE: External E-mail - RE: Vacation Request - The YMCA of Midland

What that does is, that it will not allow them to build over that portion of land (in this case alley) and you have all rights to enter and conduct business as usual until they come to an agreement with you to remove/relocate the cable plant.

From: Luis Montez <luis.montez@AlticeTechServicesUSA.com>
Sent: Friday, March 27, 2020 2:55 PM
To: Elizabeth Shaughnessy <eshaughnessy@midlandtexas.gov>
Subject: RE: External E-mail - RE: Vacation Request - The YMCA of Midland

I'm not exactly sure how that nonexclusive utility easement would work? Our cable plant is all overhead & we would have to relocate all the plant to be able to continue to service our existing customers.

From: Elizabeth Shaughnessy <eshaughnessy@midlandtexas.gov>
Sent: Friday, March 27, 2020 1:51 PM

To: Luis Montez <luis.montez@AlticeTechServicesUSA.com>
Subject: External E-mail - RE: Vacation Request - The YMCA of Midland

[External Email]

Caution: This email originated outside of Altice USA. Please do not click links or attachments unless you recognize the sender and know the content is safe.

Hi Luis,

Will you be in favor to move forward with the vacation if the City retains a nonexclusive utility easement until each existing easement user abandons its use of the easement?

Thank you!

Elizabeth Shaughnessy

From: Luis Montez <luis.montez@AlticeTechServicesUSA.com>
Sent: Wednesday, March 25, 2020 6:51 PM
To: Elizabeth Shaughnessy <eshaughnessy@midlandtexas.gov>
Cc: Cristina Burns <coburns@midlandtexas.gov>
Subject: RE: Vacation Request - The YMCA of Midland

We have multiple coax plant in this area, we will need to do a cost estimate to see what it'll cost to relocate & who will pay for it, we are not vacating anything unless someone pays to relocate.

From: Elizabeth Shaughnessy <eshaughnessy@midlandtexas.gov>
Sent: Wednesday, March 25, 2020 11:15 AM
To: Luis Montez <luis.montez@AlticeTechServicesUSA.com>
Cc: Cristina Burns <coburns@midlandtexas.gov>
Subject: RE: Vacation Request - The YMCA of Midland

[External Email]
Good Morning,

I was just checking in to see if you had any questions regarding the vacation for YMCA of Midland.
It is schedule to go to City Council on April 14, therefore, we would appreciate your comments as soon as possible.

Thank you!

Best Regard,
Elizabeth Shaughnessy

From: Elizabeth Shaughnessy
Sent: Wednesday, March 18, 2020 5:05 PM
To: Luis Montez <luis.montez@suddenlink.com>
Cc: Cesar.Padilla@atmosenergy.com
Subject: Vacation Request - The YMCA of Midland

Mr. Montez,

The YMCA of Midland has requested to vacate the above described Right of Way (see attachments: Exhibit A and B). Please advise this office if your company has utilities within this right-of-way. We would appreciate any comments you may have concerning this requested vacation returned to us within 5-7 days. You may reach me at (432) 685-7407 if you have any questions.

Please let me know if you have any questions regarding vacations!

Respectfully,

Elizabeth Shaughnessy
Senior Planner|Development Services
O. 432-685-7400
E. eshaughnessy@midlandtexas.gov

300 N. Loraine | P.O. Box 1152 | Midland, TX 79702

ATTENTION ELECTED OFFICIALS:
A "Reply to All" of this e-mail could lead to violations of the Texas Open Meetings Act. Please reply only to the sender.

Caution: This email originated outside of Altice USA. Please do not click links or attachments unless you recognize the sender and know the content is safe.

The information transmitted in this email and any of its attachments is intended only for the person or entity to which it is addressed and may contain information concerning Altice USA and/or its affiliates and subsidiaries that is proprietary, privileged, confidential and/or subject to copyright. Any review, retransmission, dissemination or other use of, or taking of any action in reliance upon, this information by persons or entities other than the intended recipient(s) is prohibited and may be unlawful. If you received this in error, please contact the sender immediately and delete and destroy the communication and all of the attachments you have received and all copies thereof.

CAUTION: This email originated from outside your organization — exercise caution when opening attachments or clicking links, especially from unknown senders.

CAUTION: This email originated from outside your organization — exercise caution when opening attachments or clicking links, especially from unknown senders.

CAUTION: This email originated from outside your organization — exercise caution when opening attachments or clicking links, especially from unknown senders.

Elizabeth Shaughnessy

From: drambo@midcad.org
Sent: Thursday, March 26, 2020 10:21 AM
To: Elizabeth Shaughnessy
Subject: Re: Vacation Request - The YMCA of Midland

Elizabeth...the vacation request for the 12,304 sf if valued at $ 24,608 or $ 2.00 per square foot.

Dennis Rambo
Assistant Chief Appraiser
Midland Central Appraisal District
432 699 4991 ext 3030
432 689 7185 fax

From:	Elizabeth Shaughnessy <eshaughnessy@midlandtexas.gov>
To:	Dennis Rambo <drambo@midcad.org>
Cc:	Cristina Burns <coburns@midlandtexas.gov>
Date:	03/18/2020 05:04 PM
Subject:	Vacation Request - The YMCA of Midland

Mr. Rambo,
The YMCA of Midland has requested to vacate the above described Right of Way (see attachments: Exhibit A and B). Please advise this office if your company has utilities within this right-of-way. We would appreciate any comments you may have concerning this requested vacation returned to us within 5-7 days. You may reach me at (432) 685-7407 if you have any questions.
Please let me know if you have any questions regarding vacations!
Respectfully,

Elizabeth Shaughnessy
Senior Planner|Development Services
O. 432-685-7400
E. eshaughnessy@midlandtexas.gov

300 N. Loraine | P.O. Box 1152 | Midland, TX 79702

ATTENTION ELECTED OFFICIALS:
A "Reply to All" of this e-mail could lead to violations of the Texas Open Meetings Act. Please reply only to the sender.

[attachment "V-20-0027, Metes and Bounds (Exhibit A).pdf" deleted by Dennis Rambo/MCAD] [attachment "V-20-0027, Plat (Exhibit B).pdf" deleted by Dennis Rambo/MCAD] [attachment "V-20-0027, MCAD.pdf" deleted by Dennis Rambo/MCAD]

CAUTION: This email originated from outside your organization — exercise caution when opening attachments or clicking links, especially from unknown senders.

Elizabeth Shaughnessy

From: Elizabeth Shaughnessy
Sent: Friday, March 27, 2020 4:08 PM
To: UNDERWOOD, JERRY D
Subject: RE: Vacation request - YMCA of Midland

There will not be a time limit. Thank you.

From: UNDERWOOD, JERRY D <ju1659@att.com>
Sent: Friday, March 27, 2020 4:06 PM
To: Elizabeth Shaughnessy <eshaughnessy@midlandtexas.gov>
Subject: RE: Vacation request - YMCA of Midland

I will agree to that as long as there isn't a time limit on it and we have to move after a certain time.

Thanks,
Jerry

From: Elizabeth Shaughnessy <eshaughnessy@midlandtexas.gov>
Sent: Friday, March 27, 2020 2:51 PM
To: UNDERWOOD, JERRY D <ju1659@att.com>
Subject: RE: Vacation request - YMCA of Midland

What that does is, that it will not allow them to build over that portion of land (in this case alley) and you have all rights to enter and conduct business as usual until they come to an agreement with you to remove facilities.

From: UNDERWOOD, JERRY D <ju1659@att.com>
Sent: Friday, March 27, 2020 1:54 PM
To: Elizabeth Shaughnessy <eshaughnessy@midlandtexas.gov>
Subject: RE: Vacation request - YMCA of Midland

I'm not sure what that means.

From: Elizabeth Shaughnessy <eshaughnessy@midlandtexas.gov>
Sent: Friday, March 27, 2020 1:53 PM
To: UNDERWOOD, JERRY D <ju1659@att.com>
Subject: RE: Vacation request - YMCA of Midland

Hi Jerry,

Will you be in favor to move forward with the vacation if the City retains a nonexclusive utility easement until each existing easement user abandons its use of the easement?

Thank you!

Elizabeth Shaughnessy

From: UNDERWOOD, JERRY D <ju1659@att.com>
Sent: Thursday, March 19, 2020 7:13 AM
To: Elizabeth Shaughnessy <eshaughnessy@midlandtexas.gov>
Cc: Cristina Burns <coburns@midlandtexas.gov>
Subject: RE: Vacation request - YMCA of Midland

AT&T does have facilities in this area and it would be at the cost of the customer to relocate the facilities before any vacation of an alley could be done.

Thanks,
Jerry

From: Elizabeth Shaughnessy <eshaughnessy@midlandtexas.gov>
Sent: Wednesday, March 18, 2020 5:05 PM
To: UNDERWOOD, JERRY D <ju1659@att.com>
Cc: Cristina Burns <coburns@midlandtexas.gov>
Subject: Vacation request - YMCA of Midland

Mr. Underwood,

The YMCA of Midland has requested to vacate the above described Right of Way (see attachments: Exhibit A and B). Please advise this office if your company has utilities within this right-of-way. We would appreciate any comments you may have concerning this requested vacation returned to us within 5-7 days. You may reach me at (432) 685-7407 if you have any questions.

Please let me know if you have any questions regarding vacations!

Respectfully,

Elizabeth Shaughnessy
Senior Planner|Development Services
O. 432-685-7400
E. eshaughnessy@midlandtexas.gov

MIDLAND
Feel the Energy!

300 N. Loraine | P.O. Box 1152 | Midland, TX 79702

ATTENTION ELECTED OFFICIALS:
A "Reply to All" of this e-mail could lead to violations of the Texas Open Meetings Act. Please reply only to the sender.

CAUTION: This email originated from outside your organization — exercise caution when opening attachments or clicking links, especially from unknown senders.

CAUTION: This email originated from outside your organization — exercise caution when opening attachments or clicking links, especially from unknown senders.

CAUTION: This email originated from outside your organization — exercise caution when opening attachments or clicking links, especially from unknown senders.

ATMOS energy

ATMOS ENERGY

West Texas Division
P.O. Box 1111,
Midland, Texas 79702

City of Midland
Elizabeth Shaughnessy
300 N. Loraine
Midland, Texas 79701

March 22, 2020

Re: Case Name: YMCA Alley Vacation
Case Number: V-20-0027

Mrs. Shaughnessy,

Atmos Energy has no objection to the above referenced changes to the alley right of way between Big Spring Street and Main Street north of Kansas Ave. We have no gas lines or facilities located within this section of right of way.
Please let me know if you have any further questions.

Sincerely,

Mark Lieb

Mark Lieb
Project Specialist
Atmos Energy/Permian Basin
432-617-3447 office
mark.lieb@atmosenergy.com

Elizabeth Shaughnessy

From: William Bentley <william.bentley@mygrande.com>
Sent: Monday, March 30, 2020 6:05 AM
To: Elizabeth Shaughnessy
Cc: Kelley Carson; Vicki Byler
Subject: Re: Vacation Request - The YMCA of Midland

Elizabeth,
I would as long as Grande was allowed easy access for maintenance purposes. We would be opposed to being locked out or having to ask for permission to do repair and maintenance of our existing plant.
Thanks,
Bill

On Fri, Mar 27, 2020 at 1:52 PM Elizabeth Shaughnessy <eshaughnessy@midlandtexas.gov> wrote:

> Hi William,
>
> Will you be in favor to move forward with the vacation if the City retains a nonexclusive utility easement until each existing easement user abandons its use of the easement?
>
> Thank you!
>
> Elizabeth Shaughnessy
>
> ---
>
> **From:** William Bentley <william.bentley@mygrande.com>
> **Sent:** Thursday, March 19, 2020 7:58 AM
> **To:** Elizabeth Shaughnessy <eshaughnessy@midlandtexas.gov>
> **Cc:** Cristina Burns <coburns@midlandtexas.gov>; Kelley Carson <kelley.carson@mygrande.com>; Vicki Byler <vicki.byler@mygrande.com>
> **Subject:** Re: Vacation Request - The YMCA of Midland
>
> Elizabeth, See the attached letter.
>
> Thanks,
>
> Bill

On Wed, Mar 18, 2020 at 5:03 PM Elizabeth Shaughnessy <eshaughnessy@midlandtexas.gov> wrote:

Mr. Bentley,

The YMCA of Midland has requested to vacate the above described Right of Way (see attachments: Exhibit A and B). Please advise this office if your company has utilities within this right-of-way. We would appreciate any comments you may have concerning this requested vacation returned to us within 5-7 days. You may reach me at (432) 685-7407 if you have any questions.

Please let me know if you have any questions regarding vacations!

Respectfully,

Elizabeth Shaughnessy

Senior Planner|Development Services

O. 432-685-7400

E. eshaughnessy@midlandtexas.gov

300 N. Loraine | P.O. Box 1152 | Midland, TX 79702

ATTENTION ELECTED OFFICIALS:

A "Reply to All" of this e-mail could lead to violations of the Texas Open Meetings Act. Please reply only to the sender.

--

William (Bill) Bentley

Construction Coordinator

Midland/Odessa

432.272.3086 Office

432.653.9369 Cell

william.bentley@mygrande.com

CAUTION: This email originated from outside your organization — exercise caution when opening attachments or clicking links, especially from unknown senders.

--

William (Bill) Bentley

Construction Coordinator

Midland/Odessa

432.272.3086 Office

432.653.9369 Cell

william.bentley@mygrande.com

2401 E IH 20 Odessa Tx 79766

CAUTION: This email originated from outside your organization — exercise caution when opening attachments or clicking links, especially from unknown senders.

Grande Construction Office
Midland-Odessa
2401 East Interstate Highway 20
Odessa Texas 79766

March 19th, 2020

Elizabeth Shaughnessy,

Senior Planner

City of Midland

Planning Division

Re: V-20-0027, YMCA Alley Vacation

Dear Elizabeth,

Grande Communications does have both Aerial Coax facilities in the Right-of-Way Segment known as Vacate V-20-0027. Costs to relocate our facilities can be provided upon request.
Please let me know if I can be of further assistance.

Sincerely

Bill Bentley

William (Bill) Bentley
Construction Coordinator
Midland/Odessa
432.272.3086 Office
432.653.9369 Cell
william.bentley@mygrande.com

GRANDE COMMUNICATIONS

Elizabeth Shaughnessy

From: Henderson, Jeffrey <Jeffrey.Henderson@oncor.com>
Sent: Wednesday, April 1, 2020 2:21 PM
To: Elizabeth Shaughnessy; Pino, Mariana; Matai, Sarah
Cc: Cristina Burns
Subject: RE: Vacation Request - The YMCA of MIdland

I had one of my people look at this today. He advised me we have an overhead line in the alley. I will drive by and look at it myself this afternoon but after speaking with him we will not be able to vacate the alley way without an easement for our facilities.
I will let you know more soon.
Thanks.
Jeff

Jeffrey R. Henderson
PMDS Supervisor-NCM
Oncor Electric Delivery
Midland Service Center
2401 W. Industrial Ave.
Midland, TX 79701
Ofc: 432-756-4113
jeffrey.henderson@oncor.com

Oncor.com

From: Elizabeth Shaughnessy [mailto:eshaughnessy@midlandtexas.gov]
Sent: Wednesday, April 01, 2020 1:59 PM
To: Henderson, Jeffrey; Pino, Mariana; Matai, Sarah
Cc: Cristina Burns
Subject: RE: Vacation Request - The YMCA of MIdland

Good Afternoon,

I was just checking in to know the status on your approval for this vacation. Also wanted to let you know that they will be leaving a utility easement until all utilities have been removed or relocated.

Please let me know if you have any questions.

Thank you!

Elizabeth Shaughnessy

From: Henderson, Jeffrey <Jeffrey.Henderson@oncor.com>
Sent: Friday, March 27, 2020 4:11 PM
To: Elizabeth Shaughnessy <eshaughnessy@midlandtexas.gov>; Pino, Mariana <Mariana.Pino@oncor.com>; Matai, Sarah <Sarah.Matai@oncor.com>
Cc: Cristina Burns <coburns@midlandtexas.gov>
Subject: RE: Vacation Request - The YMCA of MIdland

I will go look at it tomorrow. Sorry for the delay. I am the only one at this time doing vacate requests at this time. Just so you know, Sarah is no longer working at Oncor. She can be removed from any further correspondences.
Thanks.
Jeff

Jeffrey R. Henderson
PMDS Supervisor-NCM
Oncor/WTX Major Design
Midland Service Center
2401 W. Industrial Ave.
Midland, TX 79701
Ofc: 432-756-4113

jeffrey.henderson@oncor.com

From: Elizabeth Shaughnessy [mailto:eshaughnessy@midlandtexas.gov]
Sent: Friday, March 27, 2020 3:49 PM
To: Henderson, Jeffrey <Jeffrey.Henderson@oncor.com>; Pino, Mariana <Mariana.Pino@oncor.com>; Matai, Sarah <Sarah.Matai@oncor.com>
Cc: Cristina Burns <coburns@midlandtexas.gov>
Subject: RE: Vacation Request - The YMCA of MIdland

Good Afternoon,

I was just checking in to see if you had any questions regarding the vacation for YMCA of Midland.
It is schedule to go to City Council on April 14, therefore, we would appreciate your comments as soon as possible.

Please let me know if you have any questions.

Thank you!

Best,

Elizabeth Shaughnessy

From: Elizabeth Shaughnessy
Sent: Wednesday, March 25, 2020 11:13 AM
To: 'Henderson, Jeffrey' <Jeffrey.Henderson@oncor.com>; 'Pino, Mariana' <Mariana.Pino@oncor.com>; 'sarah.matai@oncor.com' <sarah.matai@oncor.com>
Cc: Cristina Burns <coburns@midlandtexas.gov>
Subject: RE: Vacation Request - The YMCA of MIdland

Good Morning,

I was just checking in to see if you had any questions regarding the vacation for YMCA of Midland.
It is schedule to go to City Council on April 14, therefore, we would appreciate your comments as soon as possible.

Thank you!

Best Regard,
Elizabeth Shaughnessy

From: Elizabeth Shaughnessy
Sent: Wednesday, March 18, 2020 5:05 PM
To: Henderson, Jeffrey <Jeffrey.Henderson@oncor.com>; Pino, Mariana <Mariana.Pino@oncor.com>; sarah.matai@oncor.com
Cc: Cristina Burns <coburns@midlandtexas.gov>
Subject: Vacation Request - The YMCA of MIdland

Mr. Henderson, Ms. Matia and Ms. Pino,

The YMCA of Midland has requested to vacate the above described Right of Way (see attachments: Exhibit A and B). Please advise this office if your company has utilities within this right-of-way. We would appreciate any comments you may have concerning this requested vacation returned to us within 5-7 days. You may reach me at (432) 685-7407 if you have any questions.

Please let me know if you have any questions regarding vacations!

Respectfully,

Elizabeth Shaughnessy
Senior Planner|Development Services
O. 432-685-7400
E. eshaughnessy@midlandtexas.gov

MIDLAND
Feel the Energy!

300 N. Loraine | P.O. Box 1152 | Midland, TX 79702

ATTENTION ELECTED OFFICIALS:
A "Reply to All" of this e-mail could lead to violations of the Texas Open Meetings Act. Please reply only to the sender.

WARNING: This email message did not originate from Oncor and is from an external organization. DO NOT CLICK links or attachments unless you recognize the sender and are certain the content is safe.

Confidentiality Notice: This email message, including any attachments, contains or may contain confidential information intended only for the addressee. If you are not an intended recipient of this message, be advised that any reading, dissemination, forwarding, printing, copying or other use of this message or its attachments is strictly prohibited. If you have received this message in error, please notify the sender immediately by reply message and delete this email message and any attachments from your system.

CAUTION: This email originated from outside your organization — exercise caution when opening attachments or clicking links, especially from unknown senders.

WARNING: This email message did not originate from Oncor and is from an external organization. DO NOT CLICK links or attachments unless you recognize the sender and are certain the content is safe.

Confidentiality Notice: This email message, including any attachments, contains or may contain confidential information intended only for the addressee. If you are not an intended recipient of this message, be advised that any reading, dissemination, forwarding, printing, copying or other use of this message or its attachments is strictly prohibited. If you have received this message in error, please notify the sender immediately by reply message and delete this email message and any attachments from your system.

CAUTION: This email originated from outside your organization — exercise caution when opening attachments or clicking links, especially from unknown senders.

10.35

10.37

City Council Agenda

Approved for Agenda:

City Manager's Office

MEETING DATE: **April 28, 2020**

TO: **CITY COUNCIL**

FROM: **Eric Myers, Planner**

SUBJECT: **Consider an ordinance on second reading on a request by Midland (King) DTP, LLC, for a zone change from LI, Light Industrial District to C, Commercial District on Lots 3 and 4, Block 2, Overstreet Addition, Section 2, City and County of Midland, Texas. (Generally located on the southwest corner of the intersection of Garden City Highway and King Street. Council District 2)**

Purpose:

The applicant, Midland (King) DTP, LLC, is requesting a Zone Change from LI, Light Industrial District to C, Commercial District on Lots 3 and 4, Block 2, Overstreet Addition, Section 2, City and County of Midland, Texas, to build a retail store.

Recommended City Council Action

☒ Approve ☐ Deny ☐ Directional / Informational

Fiscal Impact:

This proposal does not have a significant financial impact to the city.

Surrounding Zoning and Land Use:

The properties to the north, east, south, and west are zoned LI, Light Industrial District, and are the locations of industrial buildings.

Discussion:

The property is located at 2410 Garden City Highway and is currently vacant. The applicant is proposing to build a 9,000 square foot retail store.

Per the previous zoning ordinance, retail would have been permitted in the existing zoning district, but the zoning ordinance adopted on July 1, 2019, does not allow retail use in the LI, Light Industrial District.

This proposed zone change has been circulated to and reviewed by respective City departments and their comments, conditions, and requirements are as follows:

Fire: (Approved)

No objections

Building: (Approved)

No issues. All future structures must adhere to the 2018 International Building Codes, the 2015 International Energy Code, the 2017 NEC requirements, the 2015 International Fire Codes, local city ordinances, zoning requirements, established setbacks, and floodplain requirements if necessary.

Engineering: (Approved)

No objection to zone change.
Site drainage, utilities, driveway access, and traffic circulation may be adjusted during construction drawing review as necessary to receive building permit approval from Engineering and Traffic Operations.

Code: (Approved)

No Oil or Gas wells identified within 500 ft. permitted well radius or in the 135 ft. non-permitted well radius of location on plat.

Transportation: (Approved)

Site drainage, utilities, driveway access, and traffic circulation may be adjusted during construction drawing review as necessary to receive building permit approval from Engineering and Traffic Operations.

No objection to zone change.

Planning:

Per the Future Land Use Map, this location is designated as a special study area. Although this area is primarily used for industrial purposes, Garden City Highway is a major corridor where retail uses would be appropriate.

The Planning and Zoning Commission recommended approval of this request at the March 16, 2020 meeting.

This request was approved at the April 14, 2020 City Council meeting.

Staff recommends **approval** of the zone change from LI, Light Industrial District to C, Commercial District.

Conditions:

A. That the use and development of this property shall conform to the regulations of the C, Commercial District.

Letters of Objection:

Staff has not received any letters of objection as of April 8, 2020.

Attachments:

Application
Site Plan
Maps

ORDINANCE NO. _____

AN ORDINANCE AMENDING THE ZONING DISTRICT MAP OF THE CITY OF MIDLAND TO REZONE LOTS 3 AND 4, BLOCK 2, OVERSTREET ADDITION, SECTION 2, CITY AND COUNTY OF MIDLAND, TEXAS, FROM LI, LIGHT INDUSTRIAL DISTRICT TO C, COMMERCIAL DISTRICT (GENERALLY LOCATED AT THE SOUTHWEST CORNER OF THE INTERSECTION OF GARDEN CITY HIGHWAY AND KING STREET); CONTAINING A CUMULATIVE CLAUSE; CONTAINING A SAVINGS AND SEVERABILITY CLAUSE; PROVIDING FOR A MAXIMUM PENALTY OR FINE OF TWO THOUSAND DOLLARS ($2,000.00); AND ORDERING PUBLICATION

WHEREAS, the City Planning and Zoning Commission and the Governing Body of the City of Midland, in compliance with the City Charter, the City Code, and State law, have given the requisite notices by United States mail, publication and otherwise; and after a full and fair hearing to all of the property owners generally and particularly to those interested persons situated in the affected area and in the vicinity thereof, the Governing Body finds that the public health, safety and general welfare will be best served by rezoning Lots 3 and 4, Block 2, Overstreet Addition, Section 2, City and County of Midland, Texas (the "Property") to C, Commercial District, as set out hereinafter;

NOW, THEREFORE, BE IT ORDAINED BY THE CITY COUNCIL OF THE CITY OF MIDLAND, TEXAS:

SECTION ONE. That the Zoning District Map of the City of Midland, Texas, is hereby amended to rezone the Property from LI, Light Industrial District to C, Commercial District.

SECTION TWO. That the definitions given in the zoning regulations contained in the City Code of the City of Midland, Texas, shall be applicable to such of those terms as are used herein.

SECTION THREE. The provisions of this ordinance are to be cumulative of all other ordinances or parts of ordinances governing or regulating the same subject matter as that covered herein; provided, however, that all prior ordinances or parts of ordinances

inconsistent with or in conflict with any of the provisions of this ordinance are hereby expressly repealed to the extent of any such inconsistency or conflict.

SECTION FOUR. If any section, subsection, sentence, clause or phrase of this ordinance is, for any reason, held to be unconstitutional or invalid, such holding shall not affect the validity of the remaining portions of this ordinance. The Council of the City of Midland hereby declares that it would have passed this ordinance and each section, subsection, sentence, clause, or phrase hereof irrespective of the fact that any one or more sections, subsections, sentences, clauses, or phrases be declared unconstitutional or invalid.

SECTION FIVE. The penalty for violation of this ordinance shall be in accordance with the general penalty provisions contained in Section 1-3-1 of the City Code of Midland, Texas, which provides for a fine not exceeding two thousand dollars ($2,000.00).

SECTION SIX. The City Secretary is hereby authorized and directed to publish the descriptive caption of this ordinance in the manner and for the length of time prescribed by the law as an alternative method of publication.

The above and foregoing ordinance was duly proposed, read in full and adopted on first reading, the _____ day of _____, A.D., 2020; and passed to second reading on motion of Council member _____, seconded by Council member _____, by the following vote:

Council members voting "AYE":

Council members voting "NAY":

The above and foregoing ordinance was read in full and finally adopted by the following vote upon motion of Council member _____, seconded by Council member _____, on the _____ day of _____, A.D., 2020, at a regular meeting of the City Council:

Council members voting "AYE":

Council members voting "NAY":

PASSED AND APPROVED THIS _____ day of _____, A.D., 2020.

_____
Patrick N. Payton, Mayor

ATTEST:

_____
Amy M. Turner, City Secretary

APPROVED AS TO CONTENT
AND COMPLETENESS:

_____
Robert Patrick, Assistant City Manager

_____
Charles Harrington, Director of Development Services

APPROVED ONLY AS TO FORM:

_____
John Ohnemiller, City Attorney

MIDLAND
Planning Division

Zone Change/Planned District Amendment/Site Plan Approval

Project Number: Z-20-0171

Case Number:

Applicant *(if acting as Agent, see affidavit on page 2)*		Phone (615) 370-0670
Printed Name: Midland (King) DTP, LLC		Email gglaser@gbtrealty.com
Address 9010 Overlook Blvd	City Brentwood	State TN / Zip 30727

Property Owner		Phone (432) 978-754
Printed Name: Alfredo Chavez		Email
Address 900 W. Florida Ave.	City Midland	State TX / Zip 79701

Representative *(if different from Applicant or Property Owner)*		Phone (615) 519-8208
Firm: GBT Realty Corporation		
Printed Name: Bob Gage		Email bgage@gbtrealty.com
Address 9010 Overlook Blvd	City Brentwood	State TN / Zip 37027

Street Address: 2410 Garden City Highway

Legal Description

Lot: 003 & 004 Block: 002 Subdivision: Overstreet Sec 2, City of Midland

Current Zoning: LI Light Industrial

Proposed Zone: C- Commercial
(List by tracts if more than one district is requested)

Reason for Zone Change Request: Build a retail store

Present Use of Property: Vacant

Proposed Use of Property: Construct a 9,000 square foot retail store with parking and utilities on the 1.05 acre tract

How would this zone change affect the public health, safety and welfare?
The retail development would benifit the public and community. Neighboring busineses are supply and rental facilities

Describe how conditions affecting the property have changed since present zoning designation: This area of town is just north of Highway 20. It would benifit the community to have more retail developments and less industrial facilities.

Submittal and Fees

Items to be submitted with this application form:

- Application Fee – Payable to the 'City of Midland'
- Dimensioned Site Plan
- Digital Copies of Site Plan (PDF/JPEG)

Signature *(by property owner only – authorized agent must sign affidavit below)*	
Applicant (signature):	Date: 2-10-2020
Applicant (printed): Greg Glaser, Development Manager	
Property Owner (signature):	Date: 2-8-2020
Property Owner (printed) : Alfredo Chavez	

The Zone Change/Planned District Amendment/Site Plan Approval shall be considered officially received in the Planning office only when it has been submitted in full compliance with the provisions of Section 212 of the Texas Local Government Code and the Zoning Code of Ordinances of the City of Midland and when such required items for the application are also received.

All materials, including exhibits, submitted in support of an application, or displayed during a public hearing, shall remain the property of the City of Midland.

If an agent is authorized by the property owner to file and execute the application on behalf of the property owner, the agent must complete the affidavit below.

STATE OF ~~TEXAS~~ Tennessee
COUNTY OF ~~MIDLAND~~ Davidson

Before me, the undersigned authority, on this day personally appeared GREG GLASER who, being by me duly sworn, upon oath says: That (s)he is authorized by Alfredo Chavez, the owner of the above described property, to fully represent him/her in this application and that (s)he had the legal right, power and authority to sign said owner's name hereto as his/her attorney in fact.

Authorized Agent (*signature*)

JULIA FRANKS LOYD NOTARY PUBLIC STATE OF TENNESSEE COUNTY OF DAVIDSON

Subscribed and sworn to before me, this 10th day of February, 2020, to certify which witness my hand and seal of office.

NOTARY PUBLIC, ~~MIDLAND~~ Davidson COUNTY, ~~TEXAS~~ Tennessee

FOR OFFICE USE ONLY

☑ Property Owner Authorization	☐ Dimensioned Site Plan
☑ Application Fee	☑ Plans in Digital Format (PDF/JPEG)
Check # 023218	
Received By:	Date: RECEIVED FEB 19 2020

BY: .....

****Application will not be considered for scheduling until reviewed by a planner.****

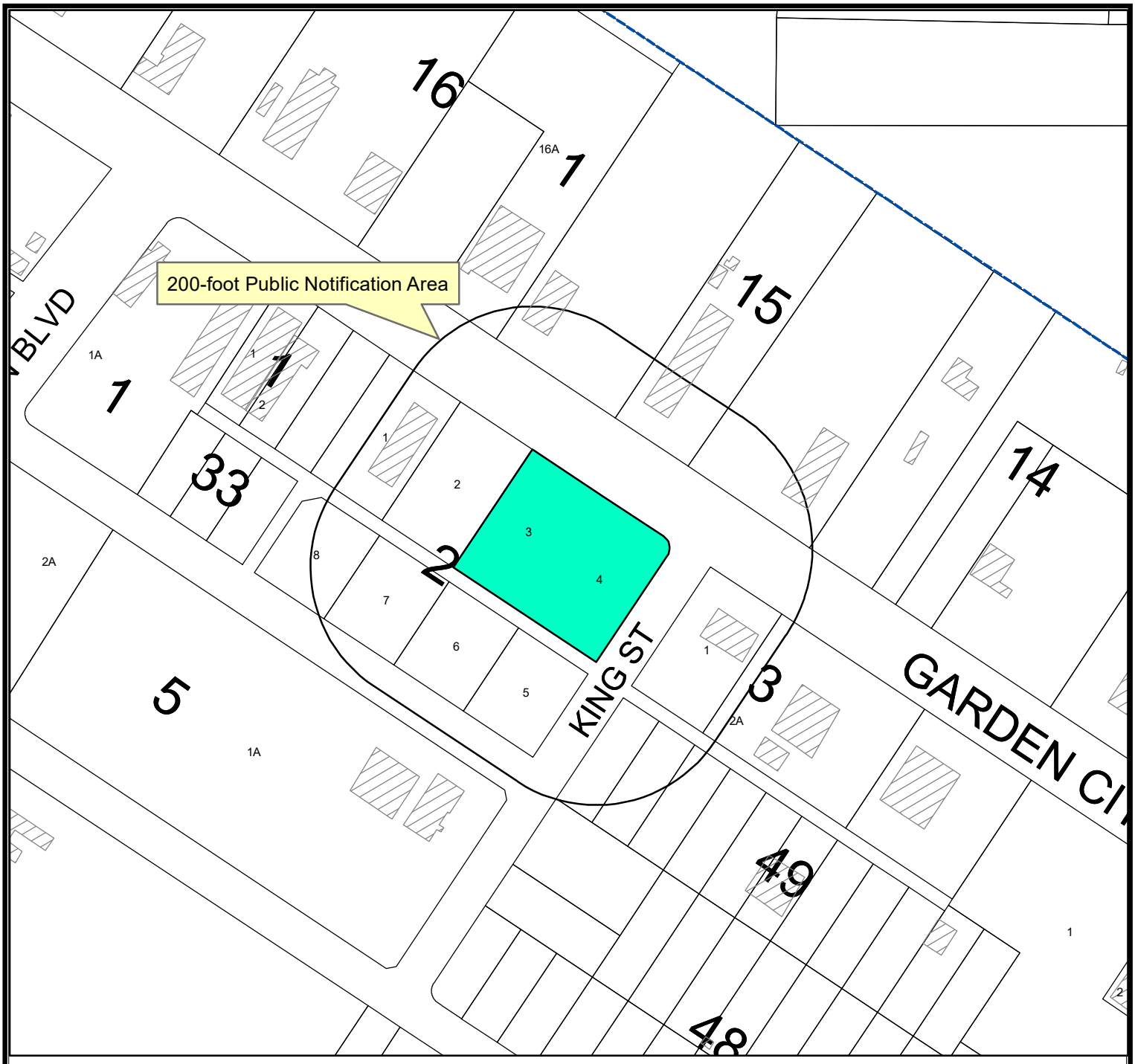

LOCATION MAP

Z-20-0171 **Scale: 1" = 200'**

Consider a request by Midland (King) DTP, LLC, for a zone change from LI, Light Industrial District to C, Commercial District on Lots 3 & 4, Block 2, Overstreet Addition, Section 2, City and County of Midland, Texas. Generally located on the southwest corner of the intersection of Garden City Highway and King Street. (Council District 2)

LEGEND

- CITY LIMITS
- PARCEL
- PRIVATE BLDGS

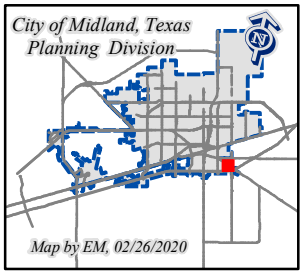

©THE CITY OF MIDLAND - 2020
THIS DATA IS NOT A SUBSTITUTION FOR A SURVEY PRODUCT, NOR IS IT DESIGNED TO BE USED AS A PRIMARY TOOL IN PERMITTING OR OTHER DECISIONS BASED SOLELY ON THE INFORMATION CONTAINED HEREIN.
THE CITY OF MIDLAND SHALL NOT BE RESPONSIBLE FOR ANY DECISIONS BASED UPON THE USE OF THIS DATA.

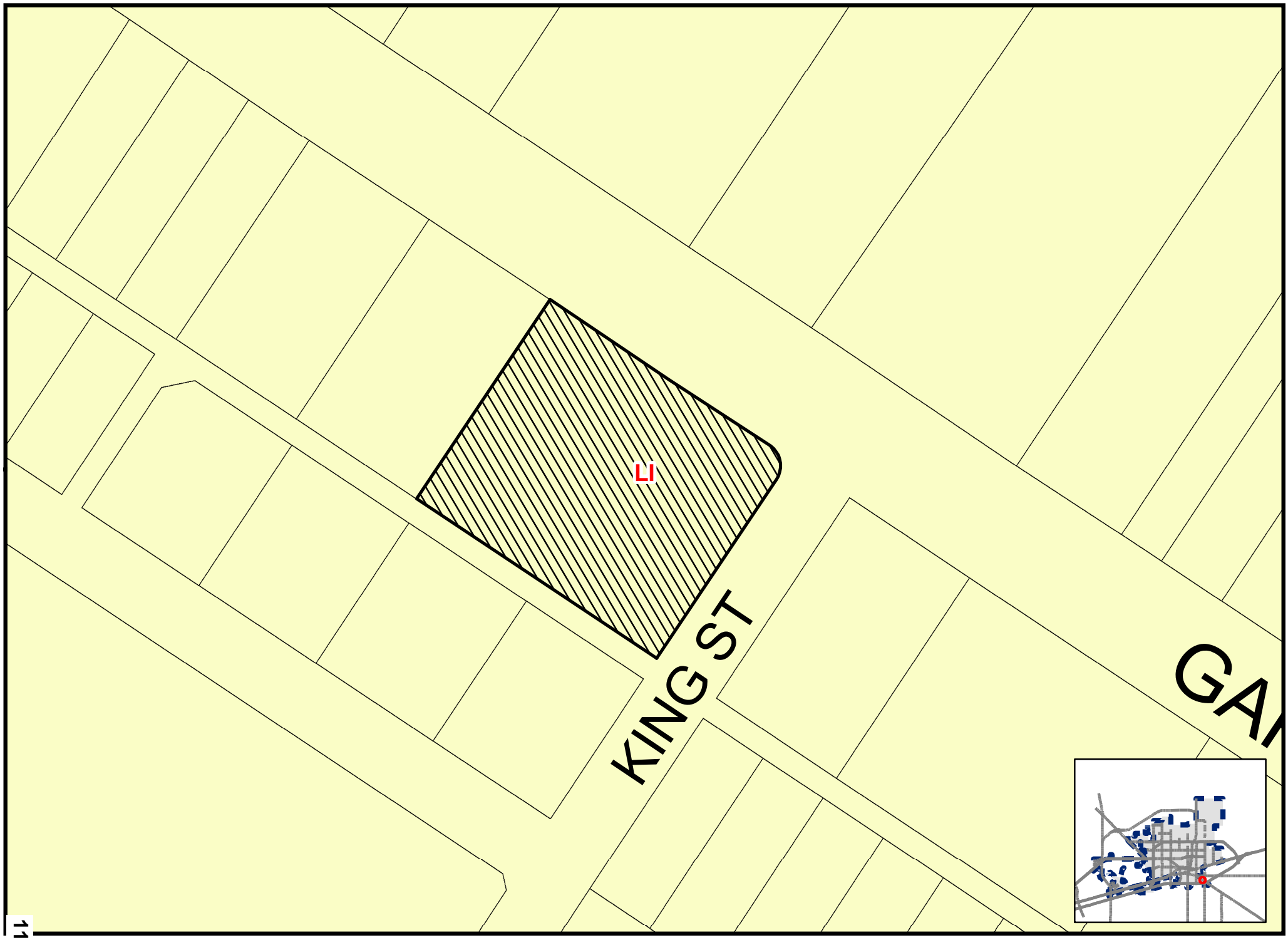

11.10

ap By EM, 2/26/2020

Z-20-0171

Scale: 1" = 100'

ZONING MAP

© **THE CITY OF MIDLAND - 2020:** THIS DATA IS NOT A SUBSTITUTION FOR A SURVEY PRODUCT, NOR IS IT DESIGNED TO BE USED AS A PRIMARY TOOL IN PERMITTING OR OTHER DECISIONS BASED SOLELY ON THE INFORMATION CONTAINED HEREIN.THE CITY OF MIDLAND SHALL NOT BE RESPONSIBLE FOR ANY DECISIONS BASED UPON THE USE OF THIS DATA.

PRELIMINARY SITE PLAN

MIDLAND, TEXAS (140)
Garden City Highway (TX-158) & King Street

PROTOTYPE:	A	DEVELOPER		DESIGNER		DATE
BLDG/SALES SF:	9,026 / 7,263	Company:	GBT Realty Corp.	Company:	GBT Realty Corp.	01-28-20
ACREAGE:	1.05	Name:	Austin Rogers	Name:	Jacob Carter	
PARKING SPACES:	31	Phone #:	(615) 370-0670	Phone #:	(615) 370-0670	

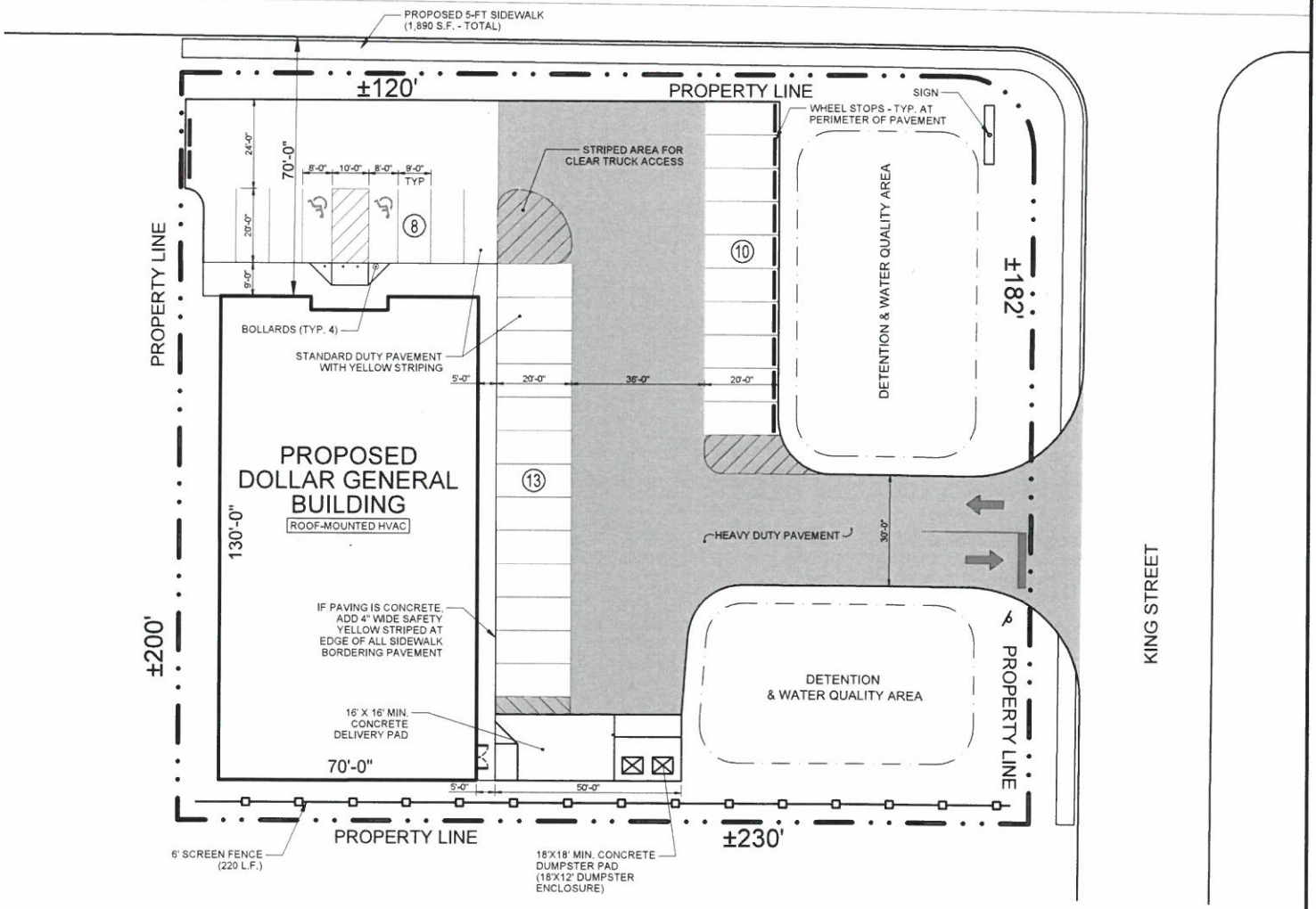

NOTE:
DIMENSIONS SHOWN ALONG PROPERTY, RIGHT-OF-WAY, AND/OR LEASE LINES ARE PRELIMINARY AND SHOWN FOR INFORMATIONAL PURPOSES ONLY

NOTE:
PARKING REQUIRED BY CODE:
1 SPACE / 300 G.F.A. = 31 SPACES

RE-PLATTING REQUIRED

NORTH

SCALE = NTS

11.12

11.13

11.14

11.15

City Council Agenda

Approved for Agenda:
rwpatrick
City Manager's Office

MEETING DATE: **April 28, 2020**

TO: **City Council/ City Manager**

FROM: **Elizabeth Shaughnessy, Senior Planner**

SUBJECT: **Hold a public hearing and consider an ordinance on a request by Cork & Pig Tavern – Ally Village, LLC, for a Specific Use Designation with Term for the Sale of all Alcoholic Beverages, for on premises consumption in a restaurant, on a 5,460 square foot portion of Lot 2, Block 1, Corporate Plaza, Section 21, City and County of Midland, Texas. (Generally located on the south side of Spring Park Drive, approximately 685-feet east of N. Big Spring Street. Council District 2)**

Purpose:

The applicant is requesting a Specific Use Designation with Term for the sale of all alcoholic beverages for on-premises consumption in a restaurant at 200 Spring Park Drive, Suite 200, Midland, Texas 79705.

Recommended City Council Action:

☒ Approve ☐ Deny ☐ Direction/Informational

Fiscal Impact:

This proposal does not have a significant financial impact to the City.

Current Zoning:

RR, Regional Retail District.

Surrounding Zoning and Land Use:

The property is located at 200 Spring Park Drive, Suite 200 in a RR, Regional Retail District. The property to the north is zoned RR, Regional Retail District, and the location of

Ally Outdoor and Ally Cafe. The property to the east is zoned PD, Planning District for a Transitional District. This property is regulated by Ordnance No. 6728 and is the location of offices. The properties to the south are zoned SF-2, Single-Family Dwelling District, and the location of residences. The properties to the west are zoned RR, Regional Retail District, and the location of Midland Self Storage and SoftSuds.

Discussion:

The property is located in a RR, Regional Retail District, which permits the sale of alcoholic beverages, for on-premises consumption in a restaurant with the approval of a Specific Use Designation with term. The applicant is proposing a restaurant Cork & Pig Tavern in the shopping center. Cork & Pig Tavern will be located in building "B", and will have a total square footage of 5,460, of which 3,900 square feet will be dedicated to the alcohol serviceable area.

The proposed site plan provides adequate access and internal circulation. A total of 229 shared parking spaces for all three (3) proposed buildings, of which 8 will be accessible spaces. The Restaurant will have a total occupancy of 89 people; therefore, 15 parking spaces will be required.

The restaurant will have the following hours of operation and alcohol service:

Monday through Thursday: 11:00 a.m. to 10:00 p.m.
Friday through Saturday: 11:00 a.m. to 11:00 p.m.
Sunday: 11:00 a.m. to 9:00 p.m.

Per Midland City Code, Section 5-4-4, Prohibited Places of Business:

The sale of any alcoholic beverage is hereby prohibited by any person, where the place of business of any such dealer is within 300 feet of any church, public school, public school ground, athletic stadium used by any public school or public hospital, the measurements to be along the property lines of the street fronts and from front door to front door and in a direct line across intersections where they occur.

There are no schools or churches within 300 feet of the property.

This request has been circulated to and reviewed by respective City departments for internal review and their comments, conditions, and requirements are as follows:

Engineering: (Approved)

No objection.

Fire: (Approved)

No comments.

Transportation: (Approved)

No objection.

Code Administration: (Approved)

The SUD for Cork and Pig is acceptable. The property must adhere to the current maximum occupant load of 89 patrons. Occupancy loads must be posted in accordance with section 1004.3 of the 2015 International Fire Code.

Planning:

The request is in compliance with the *Tall City Tomorrow Comprehensive Plan, Chapter 6-Character Plan Goal 4, which is to* "Encourage the development of places where Midland residents can gather and socialize to build connections." (Tall City Tomorrow page 137) This request will aid in promoting investment in an established area with existing capital assets. This development will make full use of existing infrastructure, while also respecting the character of the surrounding neighborhood. This Development will comply with Future Land Use map, which calls for Regional Commercial (CR), which recommends areas that improve economic performance and opportunities for social interaction, by locating diverse and complementary uses in close proximity.

This request was recommended for approval at the April 6, 2020 Planning and Zoning Commission Meeting.

This request meets all requirements; therefore, staff recommends approval of a Specific Use Designation with Term for the sale of all alcoholic beverages, for on-premises consumption, in a restaurant, subject to Conditions A thought G.

Conditions:

A. **That the alcoholic serviceable area of the restaurant shall be limited to approximately 3,900 square feet as shown in Exhibit "A", which is attached hereto and incorporated herein for all purposes.**

B. **That the occupancy of the establishment shall not exceed the maximum occupancy determined by the Building Code and Fire Code.**

C. **That the establishment shall meet all requirements of the Fire Department and Code Administration.**

D. **That the sale and on-premises consumption of alcoholic beverages shall conform to applicable state and local laws.**

E. **That the days and hours of alcoholic beverages sales and consumption shall be limited to:**

Monday through Thursday: 11:00 a.m. to 10:00 p.m.
Friday through Saturday: 11:00 a.m. to 11:00 p.m.
Sunday: 11:00 a.m. to 9:00 p.m.

F. **That the applicant shall obtain a Certificate of Occupancy prior to the commencement of the sale of alcoholic beverages for on premises consumption to ensure that the conditions of this permit are satisfied.**

G. **That in accordance with Section 9.07.E.3 of the Zoning Ordinance, the restaurant shall be in operation within 120 days from the final adoption date of this ordinance.**

Letters of Objection:

As of April 22, 2020, staff has not received any letters of objections.

Attachments:

Floor Plans (Exhibit A)
Application
Maps

ORDINANCE NO. _____

AN ORDINANCE AMENDING THE ZONING DISTRICT MAP OF THE CITY OF MIDLAND TO GRANT A SPECIFIC USE DESIGNATION WITH TERM FOR A 5,460-SQUARE FOOT PORTION OF LOT 2, BLOCK 1, CORPORATE PLAZA, SECTION 21, CITY AND COUNTY OF MIDLAND, TEXAS (GENERALLY LOCATED ON THE SOUTH SIDE OF SPRING PARK DRIVE, APPROXIMATELY 685 FEET EAST OF NORTH BIG SPRING STREET), WHICH IS PRESENTLY ZONED RR, REGIONAL RETAIL DISTRICT, ALLOWING SAID PROPERTY TO BE USED FOR THE SALE OF ALL ALCOHOLIC BEVERAGES IN A RESTAURANT FOR ON-PREMISES CONSUMPTION; MAKING SAID DESIGNATION SUBJECT TO CERTAIN CONDITIONS AND RESTRICTIONS CONTAINED HEREIN; CONTAINING A CUMULATIVE CLAUSE; CONTAINING A SAVINGS AND SEVERABILITY CLAUSE; PROVIDING FOR A MAXIMUM PENALTY OR FINE OF TWO THOUSAND DOLLARS ($2,000.00); AND ORDERING PUBLICATION

WHEREAS, the City Planning and Zoning Commission and the Governing Body of the City of Midland, Texas, in compliance with the City Charter, the City Code, and State law, have given the requisite notices by United States mail, publication and otherwise; and after holding due hearings affording a full and fair hearing to all of the property owners generally, and particularly to those interested persons situated in the affected area and in the vicinity thereof, the Governing Body of the City of Midland finds that the public convenience will be best served by granting a Specific Use Designation With Term for a 5,460-square foot portion of Lot 2, Block 1, Corporate Plaza, Section 21, City and County of Midland, Texas (the "Property") as set out hereinafter;

NOW, THEREFORE, BE IT ORDAINED BY THE CITY COUNCIL OF THE CITY OF MIDLAND, TEXAS:

SECTION ONE. That the Zoning District Map of the City of Midland, Texas, is hereby amended to grant the Property a Specific Use Designation With Term for the sale of all alcoholic beverages for on-premises consumption in a restaurant (the "Establishment"), together with the uses permitted in the present RR, Regional Retail District.

SECTION TWO. That the Property shall be subject to the following conditions and

restrictions:

A. That the serviceable area of the Establishment shall be limited to approximately 3,900 contiguous square feet as shown in Exhibit "A", which is attached hereto and incorporated herein for all purposes.

B. That the occupancy of the Establishment shall not exceed the maximum occupancy determined by the Building Code and Fire Code.

C. That the sale and on-premises consumption of alcoholic beverages shall conform to all applicable state and local laws.

D. That the days and hours of alcoholic beverage sales and consumption shall be limited to the following:

Monday through Thursday from 11:00 a.m. to 10:00 p.m.;
Friday and Saturday from 11:00 a.m. to 11:00 p.m.; and
Sunday from 11:00 a.m. to 9:00 p.m.

E. That the Establishment shall meet the requirements of the Fire Department and the Code Administration Division.

F. That the applicant shall obtain a Certificate of Occupancy for the Establishment prior to the commencement of the sale of alcoholic beverages for on-premises consumption to ensure that the conditions of this Specific Use Designation With Term are satisfied.

G. That in accordance with Section 11-1-9.07.E.3 of the City Code, the Establishment shall be in operation within 120 days from the final adoption date of this ordinance.

SECTION THREE. The provisions of this ordinance are to be cumulative of all other ordinances or parts of ordinances governing or regulating the same subject matter as that covered herein; provided, however, that all prior ordinances or parts of ordinances, inconsistent with or in conflict with any of the provisions of this ordinance are hereby expressly repealed to the extent of any such inconsistency or conflict.

SECTION FOUR. If any section, subsection, sentence, clause or phrase of this ordinance is, for any reason, held to be unconstitutional or invalid, such holding shall not affect the validity of the remaining portions of this ordinance. The Council of the City of Midland hereby declares that it would have passed this ordinance and each section, subsection, sentence, clause, or phrase hereof irrespective of the fact that any one or more sections, subsections, sentences, clauses, or phrases be declared unconstitutional or invalid.

SECTION FIVE. The penalty for violation of this ordinance shall be in accordance with the general penalty provisions contained in Section 1-3-1 of the City Code of Midland, Texas, which provides for a fine not exceeding two thousand dollars ($2,000.00).

SECTION SIX. The City Secretary is hereby authorized and directed to publish the descriptive caption of this ordinance in the manner and for the length of time prescribed by the law as an alternative method of publication.

The above and foregoing ordinance was duly proposed, read in full and adopted on first reading, the _____ day of _____, A.D., 2020; and passed to second reading on motion of Council member _____, seconded by Council member _____, by the following vote:

Council members voting "AYE":

Council members voting "NAY":

The above and foregoing ordinance was read in full and finally adopted by the following vote upon motion of Council member _____, seconded by Council member _____, on the _____ day of _____, A.D., 2020, at a regular meeting of the City Council:

Council members voting "AYE":

Council members voting "NAY":

PASSED AND APPROVED THIS _____ day of _____, A.D., 2020.

_____
Patrick N. Payton, Mayor

ATTEST:

_____
Amy M. Turner, City Secretary

APPROVED AS TO CONTENT
AND COMPLETENESS:

_____
Robert Patrick, Assistant City Manager

_____
Charles Harrington, Director of Development Services

APPROVED ONLY AS TO FORM:

_____
John Ohnemiller, City Attorney

Exhibit A

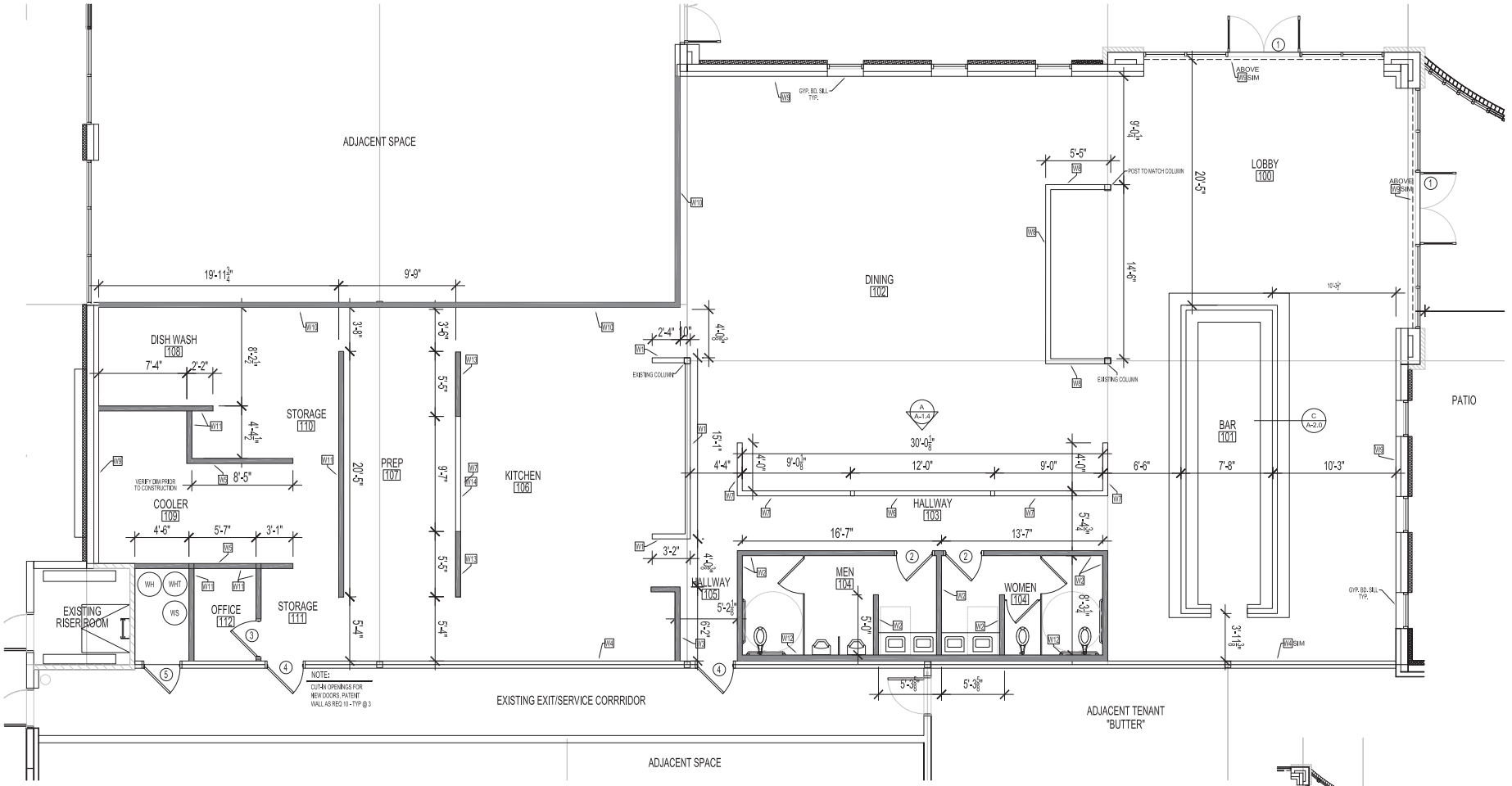

A FLOOR PLAN
A-1.0 SCALE: 1/4" = 1'-0"

HARDWARE SCHEDULE	
SET	DESCRIPTION
A	SOLID CORE WOOD DOOR - STAIN GRADE BIRCH KNOCK DOWN ALUMINUM FRAME 1½ PAIR McKINNEY HINGES #TA274 - 4½" x 4½" OVERHEAD MOUNTED CLOSER PUSH PLATE - ROCKWOOD 71A SATIN CHROME FINISH PULL HANDLE - ROCKWOOD BF150 SATIN CHROME FINISH 3 SILENCERS - 'IVES' #20 ROCKWOOD FLOOR MOUNTED DOOR STOP #440 2 KICK PLATES - 'IVES' #8400B4-15X32D MOUNT ON EACH SIDE OF DOOR
B	SOLID CORE WOOD DOOR - STAIN GRADE BIRCH KNOCK DOWN ALUMINUM FRAME ARROW LEVER TYPE DOOR HARDWARE 1½ PAIR McKINNEY HINGES #TA274 - 4½" x 4½" MORTISED PRIVACY SET 3 SILENCERS - 'IVES' #20 ROCKWOOD FLOOR MOUNTED DOOR STOP #440
C	HOLLOW METAL DOOR HOLLOW METAL FRAME ARROW EXIT DOOR HARDWARE - PUSH SIDE 1½ PAIR McKINNEY HINGES 4½" x 4½" W/ NON-REMOVEABLE PINS OVERHEAD MOUNTED CLOSER-180° NATIONAL GUARD THRESHOLD #425 KICK DOWN HOLD OPEN DEVICE 3 SILENCERS -'IVES' #20 KEYED ACCESS FROM OUTSIDE ONLY 2 KICK PLATES - 'IVES' #8400B4-15X32D MOUNT ON EACH SIDE OF DOOR

DOOR SCHEDULE					
SYMBOL	SIZE	TYPE	FRAME	HDWR.	LOCATION
	EXISTING PAIR	GLASS DOOR	ALUMINUM	EXISTING	ENTRY
②	3'-0" X 7'-0"	SOLID CORE WOOD	KD ALUMINUM	A	RESTROOM, WH CLOSET
③	3'-0" X 7'-0"	SOLID CORE WOOD	KD ALUMINUM	B	OFFICE
④	3'-0" X 7'-0"	HOLLOW METAL	HM	C	CORRIDOR
⑤	3'-0" X 7'-0"	HOLLOW METAL	HM	B	UTILITY

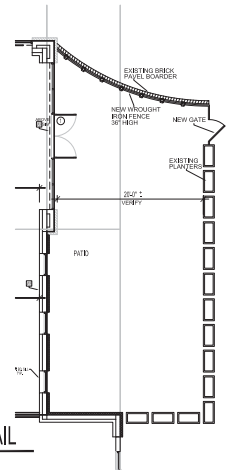

B PATIO DETAIL
A-1.0 SCALE: 1/8" = 1'-0"

FRANK RICHARDSON, AIA
ARCHITECT
10000 WATERSTONE WAY
MCKINNEY, TEXAS 75072
214-864-2504

CORK AND PIG
ALLY VILLIAGE
200 SPRING PARK DRIVE SUITE 200
MIDLAND, TEXAS
LOT 002, BLOCK 001
CORPORATE PLAZA

No.		Date
1	FINAL PLANS	12/17/19

Sheet 6 of 52

A-1.0

12.9

Exhibit A

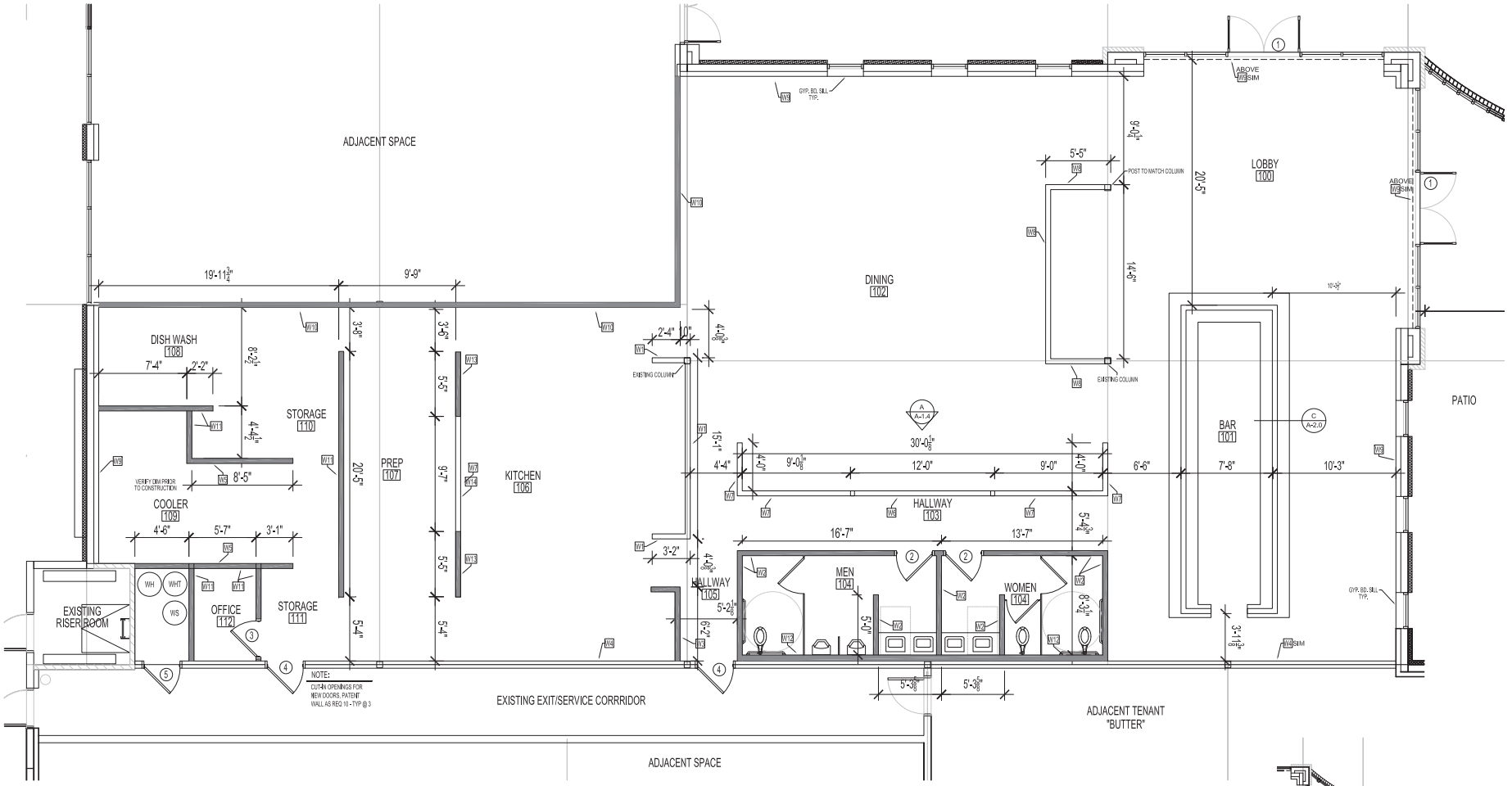

A FLOOR PLAN
A-1.0 SCALE: 1/4" = 1'-0"

HARDWARE SCHEDULE	
SET	DESCRIPTION
A	SOLID CORE WOOD DOOR - STAIN GRADE BIRCH KNOCK DOWN ALUMINUM FRAME 1½ PAIR McKINNEY HINGES #TA274 - 4½" x 4½" OVERHEAD MOUNTED CLOSER PUSH PLATE - ROCKWOOD 71A SATIN CHROME FINISH PULL HANDLE - ROCKWOOD BF150 SATIN CHROME FINISH 3 SILENCERS - 'IVES' #20 ROCKWOOD FLOOR MOUNTED DOOR STOP #440 2 KICK PLATES - 'IVES' #8400B4-15X32D MOUNT ON EACH SIDE OF DOOR
B	SOLID CORE WOOD DOOR - STAIN GRADE BIRCH KNOCK DOWN ALUMINUM FRAME ARROW LEVER TYPE DOOR HARDWARE 1½ PAIR McKINNEY HINGES #TA274 - 4½" x 4½" MORTISED PRIVACY SET 3 SILENCERS - 'IVES' #20 ROCKWOOD FLOOR MOUNTED DOOR STOP #440
C	HOLLOW METAL DOOR HOLLOW METAL FRAME ARROW EXIT DOOR HARDWARE - PUSH SIDE 1½ PAIR McKINNEY HINGES 4½" x 4½" W/ NON-REMOVEABLE PINS OVERHEAD MOUNTED CLOSER-180° NATIONAL GUARD THRESHOLD #425 KICK DOWN HOLD OPEN DEVICE 3 SILENCERS -'IVES' #20 KEYED ACCESS FROM OUTSIDE ONLY 2 KICK PLATES - 'IVES' #8400B4-15X32D MOUNT ON EACH SIDE OF DOOR

DOOR SCHEDULE					
SYMBOL	SIZE	TYPE	FRAME	HDWR.	LOCATION
	EXISTING PAIR	GLASS DOOR	ALUMINUM	EXISTING	ENTRY
①	3'-0" X 7'-0"				
②	3'-0" X 7'-0"	SOLID CORE WOOD	KD ALUMINUM	A	RESTROOM, WH CLOSET
③	3'-0" X 7'-0"	SOLID CORE WOOD	KD ALUMINUM	B	OFFICE
④	3'-0" X 7'-0"	HOLLOW METAL	HM	C	CORRIDOR
⑤	3'-0" X 7'-0"	HOLLOW METAL	HM	B	UTILITY

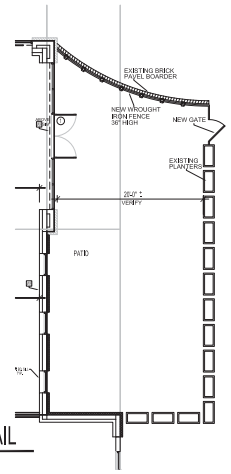

B PATIO DETAIL
A-1.0 SCALE: 1/8" = 1'-0"

FRANK RICHARDSON, AIA
ARCHITECT
10000 WATERSTONE WAY
MCKINNEY, TEXAS 75072
214-864-2504

CORK AND PIG
ALLY VILLIAGE
200 SPRING PARK DRIVE SUITE 200
MIDLAND, TEXAS
LOT 002, BLOCK 001
CORPORATE PLAZA

DCI
CHAD WALTERS
432-352-1088
CHAD@DCI-TEXAS.COM
WWW.MIDLAND-TX.COM

No.		Date
1	FINAL PLANS	12/17/19

Sheet 6 of 52

A-1.0

12.10

MIDLAND
Planning Division

Specific Use Designation with Term for the Sale of Alcoholic Beverages for On-Premises Consumption

Project Number: SUP-20-0074

Case Number: _____

Applicant *(if acting as Agent, see affidavit on page 2)* Printed Name: Cork & Pig Tavern - Ally Village, LLC		Phone (310) Email 977-5266	
Address 950 E. State Hwy 114, Ste 160	City Southlake	State Texas	Zip 76092

Property Owner Printed Name: GRIPP REAL ESTATE INVESTMENTS, LLC		Phone (214) Email 864-2504	
Address 200 SPRING PARK DRIVE, SUITE 103	City Midland	State Texas	Zip 79705

Representative *(if different from Applicant or Property Owner)* Firm: _____ Printed Name:		Phone ( ) Email	
Address	City	State	Zip

Street Address: 200 SPRING PARK DRIVE, SUITE 200

Business Name: CORK & PIG TAVERN

Legal Description
Lot: 002 Block: 001 Subdivision: CORPORATE PLAZA

Current Zoning: RESTAURANT USE WITH ON PREMISES ALCOHOL SALES

Reason for Request: Approval by City to file for TABC permit

Type of Business *(restaurant, bar, lounge, nightclub, etc.)*:

Proposed/Current Days and Hours of Operation: MONDAY - THURSDAY - 11:00am - 10:00pm
SUNDAY 11:00 am - 9:00 pm FRIDAY - SATURDAY - 11:00am - 11:00pm

Proposed Days and Hours of Alcohol Service: Same as hours open, subject to TABC laws and regulations

Total Square Footage of Business: 4560 indoor + 900 patio

Square Footage of Alcohol Serviceable Area: 3,000 indoor + 900 patio

Restroom Fixtures:				
	Men	**Toilets/Urinals:**	1 / 2	**Bathroom Sinks:** 2
	Women	**Toilets:**	2	**Bathroom Sinks:** 2

RECEIVED
MAR 10 2020

BY: .....

Submittal and Fees

Items to be submitted with this application form:

- Application Fee – Payable to the 'City of Midland'
- Dimensioned Floor Plan showing:
  - Seating
  - Exits
  - Restrooms
  - Kitchen (if applicable)
  - Total Square Footage
  - Serviceable Square Footage
- Dimensioned Site Plan showing:
  - Parking
  - Business Footprint
- Digital Copies of Floor Plan & Site Plan (PDF/JPEG)

Signatures

Applicant (signature): [signature]	Date: 3.10.20
Applicant (printed): EDUARD BUENAVENTURA	
Property Owner (signature):	Date:
Property Owner (printed) : _____	

The Specific Use Designation with Term for the sale of all alcoholic beverages shall be considered officially received in the Planning office only when it has been submitted in full compliance with the provisions of Section 212 of the Texas Local Government Code and the Zoning Code of Ordinances of the City of Midland and when such required items for the application are also received.

All materials, including exhibits, submitted in support of an application, or displayed during a public hearing, shall remain the property of the City of Midland.

If an agent is authorized by the property owner to file and execute the application on behalf of the property owner, the agent must complete the affidavit below.

STATE OF TEXAS
COUNTY OF MIDLAND

Before me, the undersigned authority, on this day personally appeared _____ who, being by me duly sworn, upon oath says: That (s)he is authorized by _____, the owner of the above described property, to fully represent him/her in this application and that (s)he had the legal right, power and authority to sign said owner's name hereto as his/her attorney in fact.

_____
Authorized Agent (*signature*)

Subscribed and sworn to before me, this _____ day of _____, 20 ___, to certify which witness my hand and seal of office.

_____
NOTARY PUBLIC, MIDLAND COUNTY, TEXAS

****Application will not be considered for scheduling until reviewed by a planner.****

Submittal and Fees

Items to be submitted with this application form:

- Application Fee – Payable to the 'City of Midland'
- Dimensioned Floor Plan showing:
  - Seating
  - Exits
  - Restrooms
  - Kitchen (if applicable)
  - Total Square Footage
  - Serviceable Square Footage
- Dimensioned Site Plan showing:
  - Parking
  - Business Footprint
- Digital Copies of Floor Plan & Site Plan (PDF/JPEG)

Signatures

Applicant (signature):	Date:
Applicant (printed):	
Property Owner (signature):	Date: 03.09.20
Property Owner (printed) : FRANK RICHARDSON / GRIPP REAL ESTATE INVESTMENTS LLC	

The Specific Use Designation with Term for the sale of all alcoholic beverages shall be considered officially received in the Planning office only when it has been submitted in full compliance with the provisions of Section 212 of the Texas Local Government Code and the Zoning Code of Ordinances of the City of Midland and when such required items for the application are also received.

All materials, including exhibits, submitted in support of an application, or displayed during a public hearing, shall remain the property of the City of Midland.

If an agent is authorized by the property owner to file and execute the application on behalf of the property owner, the agent must complete the affidavit below.

STATE OF TEXAS
COUNTY OF MIDLAND

Before me, the undersigned authority, on this day personally appeared _____ who, being by me duly sworn, upon oath says: That (s)he is authorized by _____, the owner of the above described property, to fully represent him/her in this application and that (s)he had the legal right, power and authority to sign said owner's name hereto as his/her attorney in fact.

_____
Authorized Agent (*signature*)

Subscribed and sworn to before me, this _____ day of _____, 20 ___, to certify which witness my hand and seal of office.

_____
NOTARY PUBLIC, MIDLAND COUNTY, TEXAS

****Application will not be considered for scheduling until reviewed by a planner.****

FOR OFFICE USE ONLY	
☐ Property Owner Authorization	☐ Dimensioned Floor Plan
☐ Application Fee	☐ Site Plan
Check #_____	☐ Plans in Digital Format (PDF/JPEG)
Received By:_____	Date:_____

****Application will not be considered for scheduling until reviewed by a planner.****

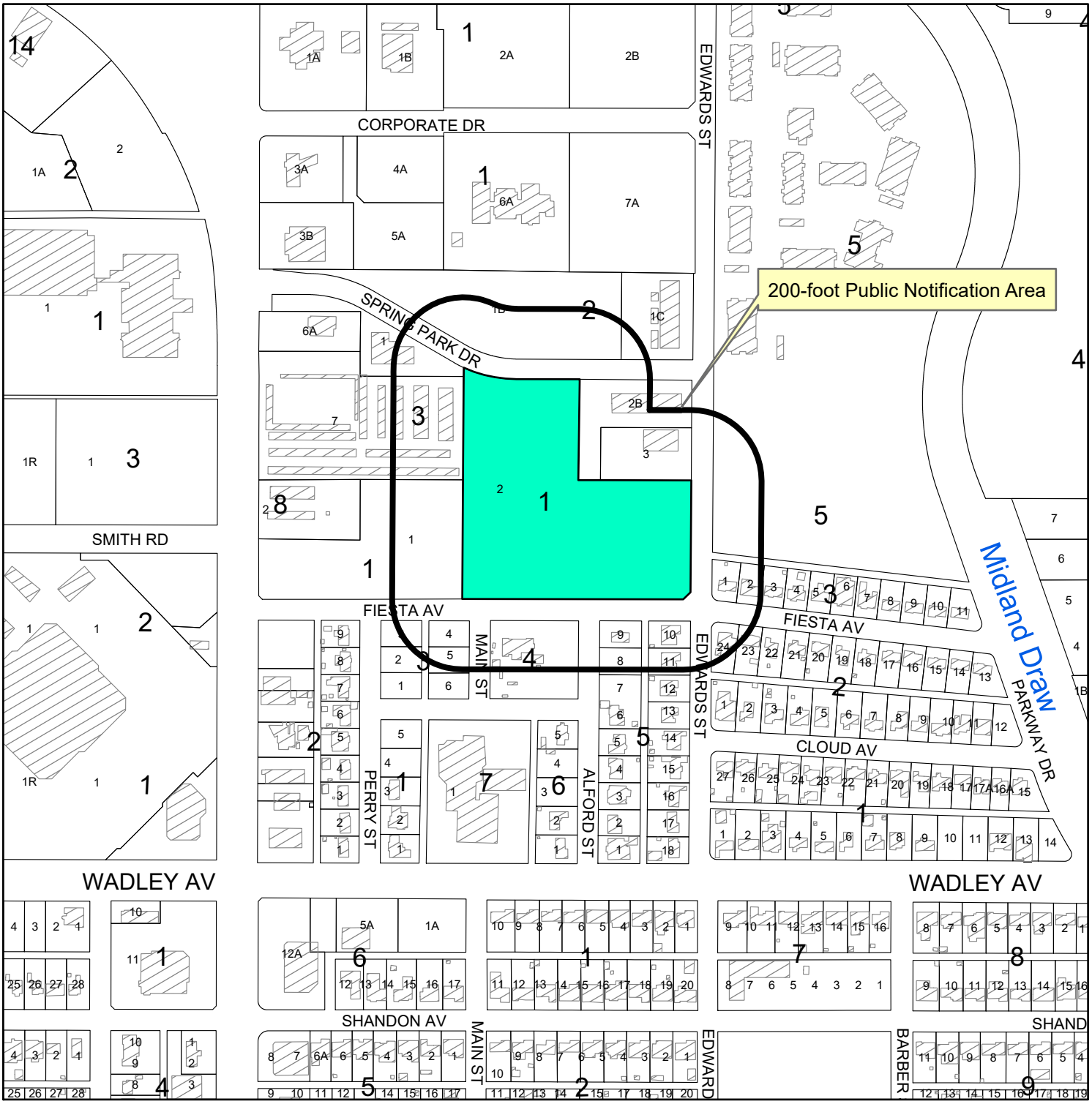

LOCATION MAP

SUD-20-0074 **Scale: 1" = 400'**

Consider a request by Cork & Pig Tavern – Ally Village, LLC for a Specific Use Designation with Term for the Sale of all Alcoholic Beverages, for on premises consumption in a restaurant, on a 5,460 square foot portion of Lot 2, Block 1, Corporate Plaza, Section 21, City and County of Midland, Texas.

Generally located on the south side of Spring Park Drive, approximately 685-feet east of N. Big Spring.
(Council District 2)

LEGEND

- CITY LIMITS
- PARCEL
- PRIVATE BLDGS

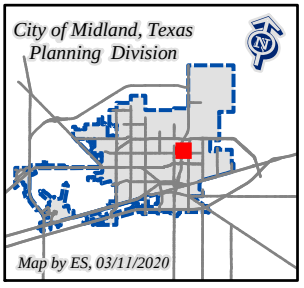

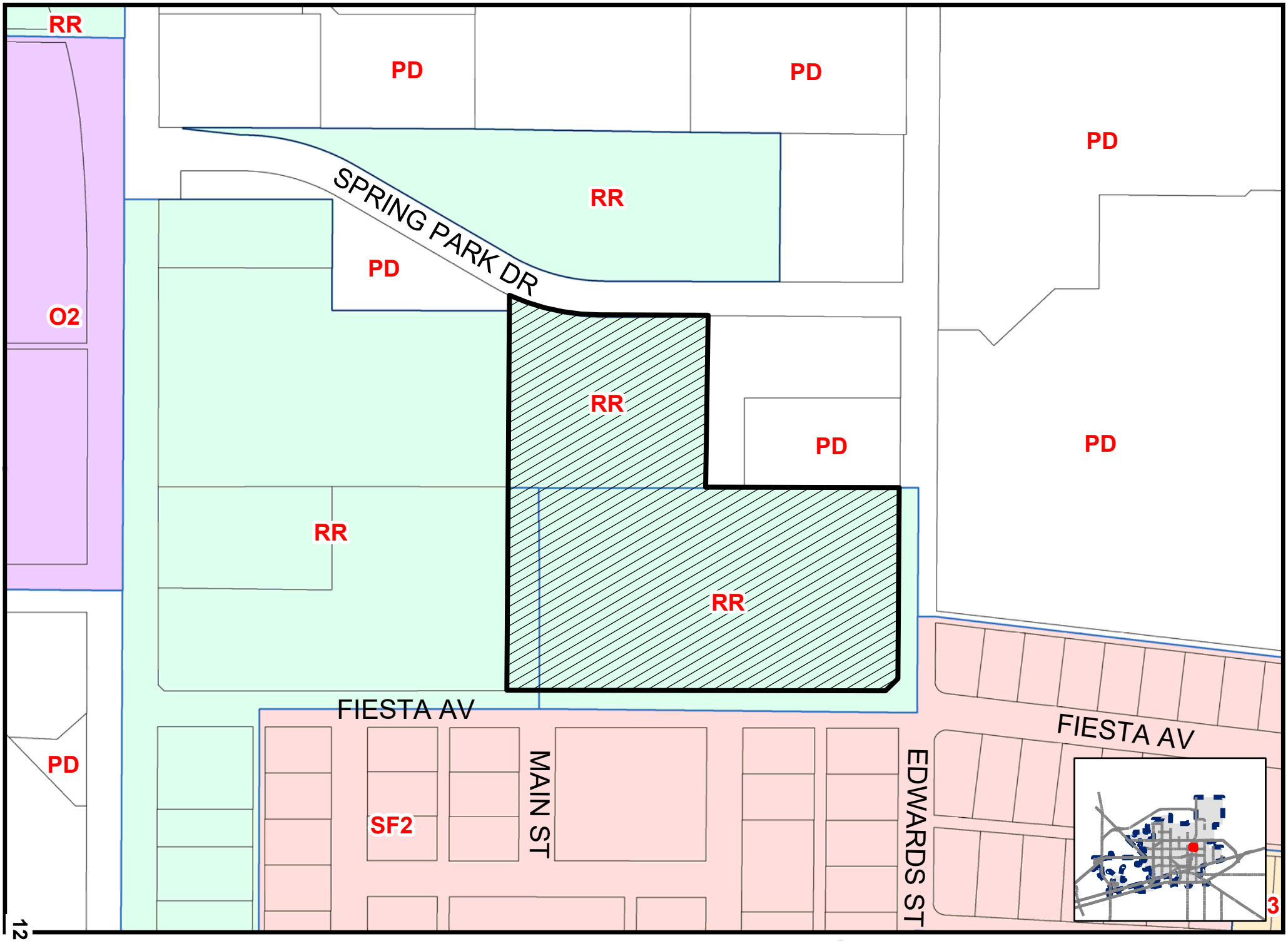

12.16

Map By ES, 3/20/2020

SUD-20-0074

Scale: 1" = 200'

ZONING MAP

12.18

12.19

12.20

City Council Agenda

Approved for Agenda:
rwpatrick
City Manager's Office

MEETING DATE: **April 28, 2020**

TO: **CITY COUNCIL**

FROM: **Eric Myers, Planner**

SUBJECT: **Hold a public hearing and consider an ordinance on a request by Alexandra Brinker for a Specific Use Designation with Term for the sale of all alcoholic beverages, for on-premises consumption, in a restaurant, on a 4,472 square foot portion of Lot 1, Block 8, Polo Park, Section 3, City and County of Midland, Texas. (Generally located on the southeast corner of the intersection of N. Garfield Street and Castleford Road. Council District 1)**

Purpose:

The applicant, Alexandra Brinker, is requesting to amend the Specific Use Designation with Term for the sale of all alcoholic beverages, for on-premises consumption, in a restaurant at 4610 N. Garfield Street D-1A.

Recommended City Council Action

☒ Approve ☐ Deny ☐ Directional / Informational

Fiscal Impact:

This proposal does not have a significant financial impact to the city.

Surrounding Zoning and Land Use:

The property is located at 4610 N. Garfield Street D-1A, in a PD, Planned District for a Shopping Center, which is regulated by Ordinance No. 7771. The properties to the north are zoned O-1, Office District, and PD, Planned District for a Housing Development, and are the locations of Comfort Suites & Polo Park Retirement Center. The properties to the east are zoned SF-2, Single Family Dwelling District, and PD, Planned District for a

Shopping Center are the locations of residences and Extra Space Storage, respectively. The properties to the west are zoned PD, Planned District for a Housing Development**,** LR, Local Retail District, and PD, Planned District for a Shopping Center, and are the locations of residences, Fairfield Inn & Suites by Marriott Midland, and Talbots, respectively. The property to the south, across West Loop 250 North, is zoned SF-1, Single Family Dwelling District, and is the location of Midland Airpark.

Discussion:

The property is located at 4610 N. Garfield Street D-1A, in a PD, Planned District for a Shopping Center, which is regulated by Ordinance No. 7771. This zoning district permits the sale of all alcoholic beverages, for on-premises consumption, in a restaurant with the approval of a Specific Use Designation.

The restaurant, Brew Street, currently has a Specific Use Permit (Ordinance No. 9630) for the sale of alcoholic beverages for on-premises consumption. The alcohol serviceable area includes a maximum floor area of 2,935 square feet, which includes a patio. Currently, the allowed days and hours of alcoholic beverage sales is the following:

Monday through Wednesday from 10:00 a.m. to 7:00 p.m.
Thursday through Saturday from 10:00 a.m. to 11:00 p.m.

The applicant is requesting to expand their alcohol service hours to the following:

Monday through Wednesday from 10:00 a.m. to 10:00 p.m.
Thursday through Saturday from 10:00 a.m. to 11:00 p.m.
Sunday from 10:00 a.m. to 10:00 p.m.

Per Midland City Code 5.4.4. –Prohibited place of business

The sale of any alcoholic beverage is hereby prohibited by any person, where the place of business of any such dealer is within 300 feet of any church, public school, public school ground, athletic stadium used by any public school or public hospital, the measurements to be along the property lines of the street fronts and from front door to front door and in a direct line across intersections where they occur.

There are no churches, private schools, public schools, public school grounds, athletic stadium, public hospital within 300 feet measurement along the property lines of the street fronts, and from the front door in a direct line across intersection where they occur within this site.

This project has been circulated to all City departments for review. Below are the department comments.

Fire: (Approved)

No objections.

Engineering: (Approved)

No objection.

Transportation: (Approved)

No objection.

Building Code: (Approved)

The SUD for is acceptable provided that the property adheres to the current maximum occupant load of 90. Occupancy loads must be posted in accordance with section 1004.3 of the 2015 International Fire Code.

Planning:

The request is in compliance with the *Tall City Tomorrow Comprehensive Plan, Chapter 6-Character Plan Goal 4, which is to* "Encourage the development of places where Midland residents can gather and socialize to build connections." (Tall City Tomorrow page 137)

This request was recommended for approval at the April 6, 2020 Planning and Zoning Commission meeting.

This request meets all requirements; therefore, staff recommends approval of this Specific Use Designation with Term for the sale of all alcoholic beverages, for on-premises consumption, in a restaurant, subject to Condition A through F.

Conditions:

A. **That the serviceable area of the restaurant shall be limited to approximately 2,935 square feet, as shown in Exhibit "A", which is attached hereto and incorporated herein for all purposes.**

B. **That the enclosed patio area, as shown in Exhibit "A", shall have an exit only gate.**

C. **That the establishment shall meet all requirements of the Fire Department and Code Administration.**

D. **That the sale and on-premises consumption of alcoholic beverages shall conform to applicable state and local laws.**

E. That the days and hours of alcoholic beverages sales and consumption shall be limited to:

Monday through Wednesday from 10:00 a.m. to 10:00 p.m.
Thursday through Saturday from 10:00 a.m. to 11:00 p.m.
Sunday from 10:00 a.m. to 10:00 p.m.

F. That Ordinance No. 9630 is hereby repealed.

Letters of Objection:

As of April 22, 2020, staff has not received any letters of objections.

Attachments:

Floor Plan (Exhibit A)
Ordinances No. 7771 and 9630
Application
Maps

ORDINANCE NO. _____

AN ORDINANCE AMENDING THE ZONING DISTRICT MAP OF THE CITY OF MIDLAND TO GRANT A SPECIFIC USE DESIGNATION WITH TERM FOR A 4,472-SQUARE FOOT PORTION OF LOT 1, BLOCK 8, POLO PARK, SECTION 3, CITY AND COUNTY OF MIDLAND, TEXAS (GENERALLY LOCATED SOUTHEAST OF THE INTERSECTION OF NORTH GARFIELD STREET AND CASTLEFORD ROAD), WHICH IS PRESENTLY ZONED PD, PLANNED DEVELOPMENT DISTRICT FOR A SHOPPING CENTER, ALLOWING SAID PROPERTY TO BE USED FOR THE SALE OF ALL ALCOHOLIC BEVERAGES IN A RESTAURANT FOR ON-PREMISES CONSUMPTION; MAKING SAID DESIGNATION SUBJECT TO CERTAIN CONDITIONS AND RESTRICTIONS CONTAINED HEREIN; CONTAINING A CUMULATIVE CLAUSE; CONTAINING A SAVINGS AND SEVERABILITY CLAUSE; PROVIDING FOR A MAXIMUM PENALTY OR FINE OF TWO THOUSAND DOLLARS ($2,000.00); AND ORDERING PUBLICATION

WHEREAS, the City Planning and Zoning Commission and the Governing Body of the City of Midland, Texas, in compliance with the City Charter, the City Code, and State law, have given the requisite notices by United States mail, publication and otherwise; and after holding due hearings affording a full and fair hearing to all of the property owners generally, and particularly to those interested persons situated in the affected area and in the vicinity thereof, the Governing Body of the City of Midland finds that the public convenience will be best served by granting a Specific Use Designation With Term for a 4,472-square foot portion of Lot 1, Block 8, Polo Park, Section 3, City and County of Midland, Texas (the "Property") as set out hereinafter;

NOW, THEREFORE, BE IT ORDAINED BY THE CITY COUNCIL OF THE CITY OF MIDLAND, TEXAS:

SECTION ONE. That the Zoning District Map of the City of Midland, Texas, is hereby amended to grant the Property a Specific Use Designation With Term for the sale of all alcoholic beverages for on-premises consumption in a restaurant (the "Establishment"), together with the uses permitted in the present PD, Planned Development District for a Shopping Center.

SECTION TWO. That the Property shall be subject to the following conditions and restrictions:

A. That the serviceable area of the Establishment shall be limited to approximately 2,935 contiguous square feet as shown in Exhibit "A", which is attached hereto and incorporated herein for all purposes.

B. That the enclosed patio area, as shown in Exhibit "A", shall have an exit only gate.

C. That the occupancy of the Establishment shall not exceed the maximum occupancy determined by the Building Code and Fire Code.

D. That the Establishment shall meet the requirements of the Fire Department and the Code Administration Division.

E. That the sale and on-premises consumption of alcoholic beverages shall conform to all applicable state and local laws.

F. That the days and hours of alcoholic beverage sales and consumption shall be limited to the following:

Monday through Wednesday from 10:00 a.m. to 10:00 p.m.;
Thursday through Saturday from 10:00 a.m. to 11:00 p.m.; and
Sunday from 10:00 a.m. to 10:00 p.m.

G. That Ordinance No. 9630 is hereby repealed.

SECTION THREE. The provisions of this ordinance are to be cumulative of all other ordinances or parts of ordinances governing or regulating the same subject matter as that covered herein; provided, however, that all prior ordinances or parts of ordinances, inconsistent with or in conflict with any of the provisions of this ordinance are hereby expressly repealed to the extent of any such inconsistency or conflict.

SECTION FOUR. If any section, subsection, sentence, clause or phrase of this ordinance is, for any reason, held to be unconstitutional or invalid, such holding shall not affect the validity of the remaining portions of this ordinance. The Council of the City of Midland hereby declares that it would have passed this ordinance and each section, subsection, sentence, clause, or phrase hereof irrespective of the fact that any one or more sections, subsections, sentences, clauses, or phrases be declared unconstitutional or invalid.

SECTION FIVE. The penalty for violation of this ordinance shall be in accordance

with the general penalty provisions contained in Section 1-3-1 of the City Code of Midland, Texas, which provides for a fine not exceeding two thousand dollars ($2,000.00).

SECTION SIX. The City Secretary is hereby authorized and directed to publish the descriptive caption of this ordinance in the manner and for the length of time prescribed by the law as an alternative method of publication.

The above and foregoing ordinance was duly proposed, read in full and adopted on first reading, the _____ day of _____, A.D., 2020; and passed to second reading on motion of Council member _____, seconded by Council member _____, by the following vote:

Council members voting "AYE":

Council members voting "NAY":

The above and foregoing ordinance was read in full and finally adopted by the following vote upon motion of Council member _____, seconded by Council member _____, on the _____ day of _____, A.D., 2020, at a regular meeting of the City Council:

Council members voting "AYE":

Council members voting "NAY":

PASSED AND APPROVED THIS _____ day of _____, A.D., 2020.

_____
Patrick N. Payton, Mayor

ATTEST:

_____
Amy M. Turner, City Secretary

APPROVED AS TO CONTENT
AND COMPLETENESS:

_____
Robert Patrick, Assistant City Manager

_____
Charles Harrington, Director of Development Services

APPROVED ONLY AS TO FORM:

_____
John Ohnemiller, City Attorney

EXHIBIT "A"

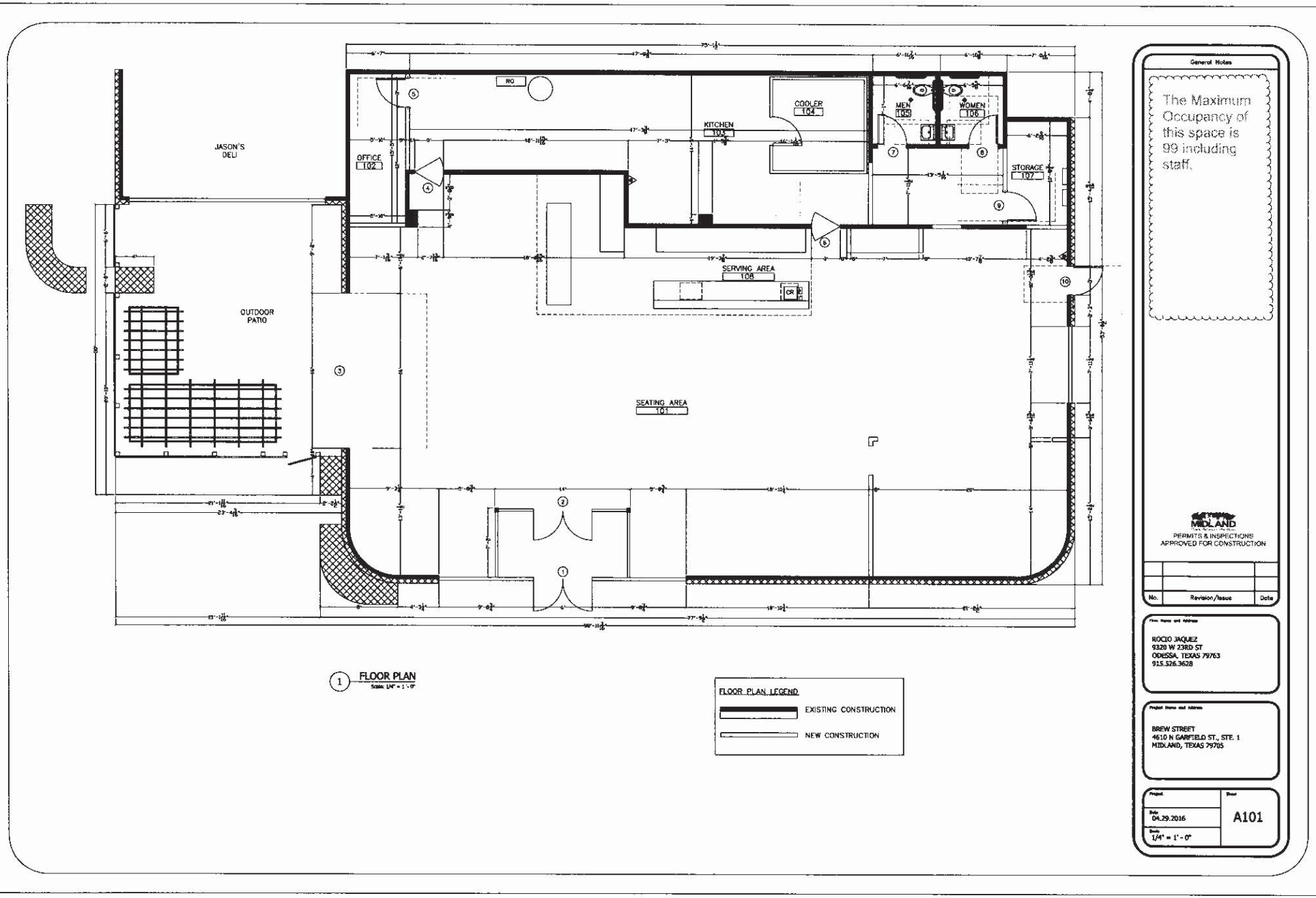

1 FLOOR PLAN
Scale: 1/4" = 1'-0"

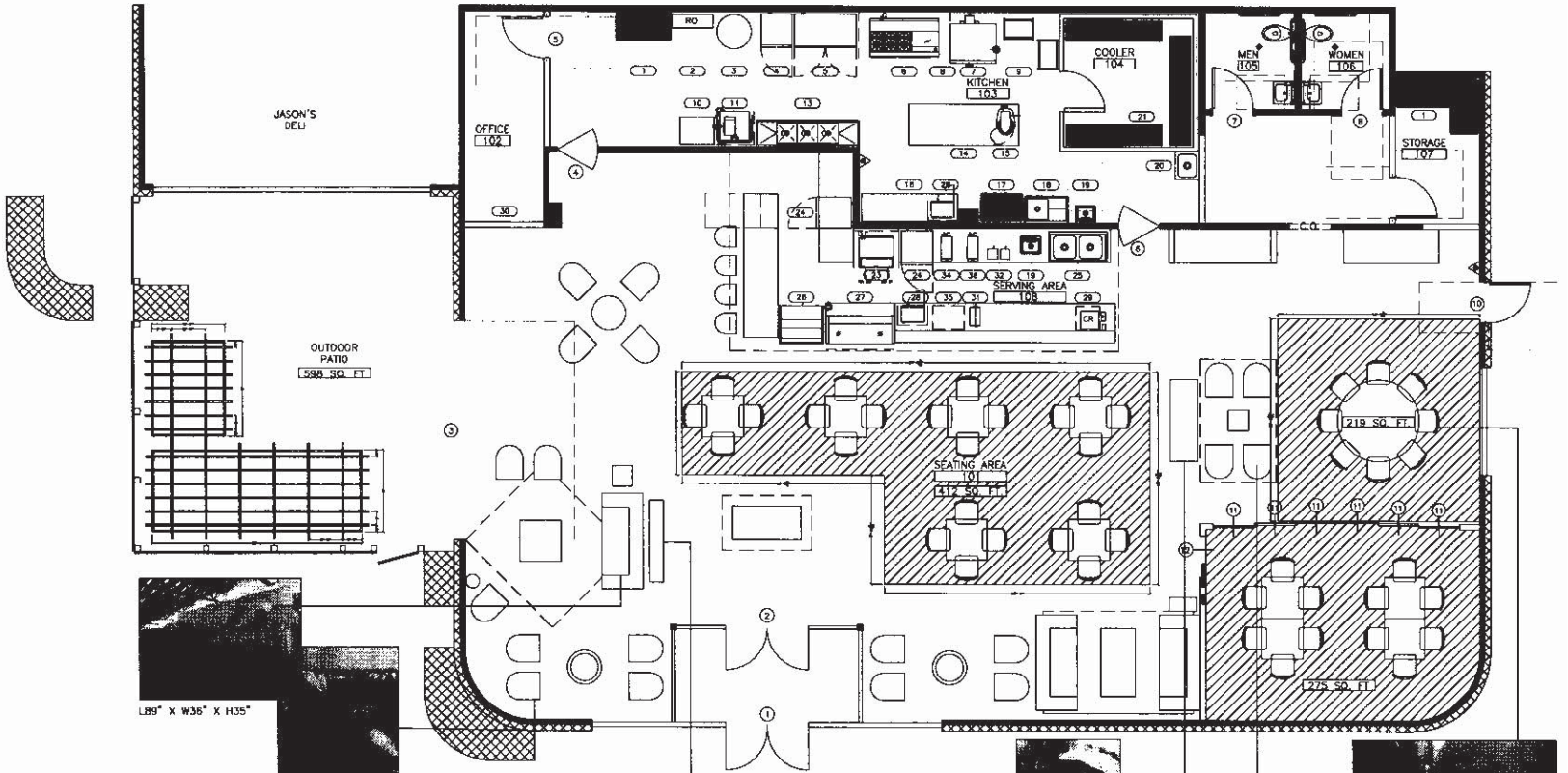

L89" X W36" X H35"

L28" X W30" X H41"

1 SEATING LAYOUT
Scale: 1/4" = 1'-0"

L38" X W14.5" X H84"

L35" X W30" X H33"

BOOK CASE:
L57" X W15.5" X H84"
WHITE CHAIR:
L37" X W28" X H53.5"

SEATING LAYOUT

ASSEMBLY WITHOUT FIXED SEATING

L35" X W30" X H33"

L70.5" X W17.5" X H81"

L29" X W32" X H42"

General Notes

The Maximum Occupancy of this space is 99 including staff.

MIDLAND

PERMITS & INSPECTIONS
APPROVED FOR CONSTRUCTION

No.	Revision/Issue	Date
1	REVISION PER CITY	5/25/16

Firm Name and Address

ROCIO JAQUEZ
9320 W 23RD ST
ODESSA, TEXAS 79763
915.526.3628

Project Name and Address

BREW STREET
4610 N GARFIELD ST., STE. 1
MIDLAND, TEXAS 79705

Project
Date: 05.25.2016
Scale: 1/4" = 1'-0"

Sheet: A101.2

13.10

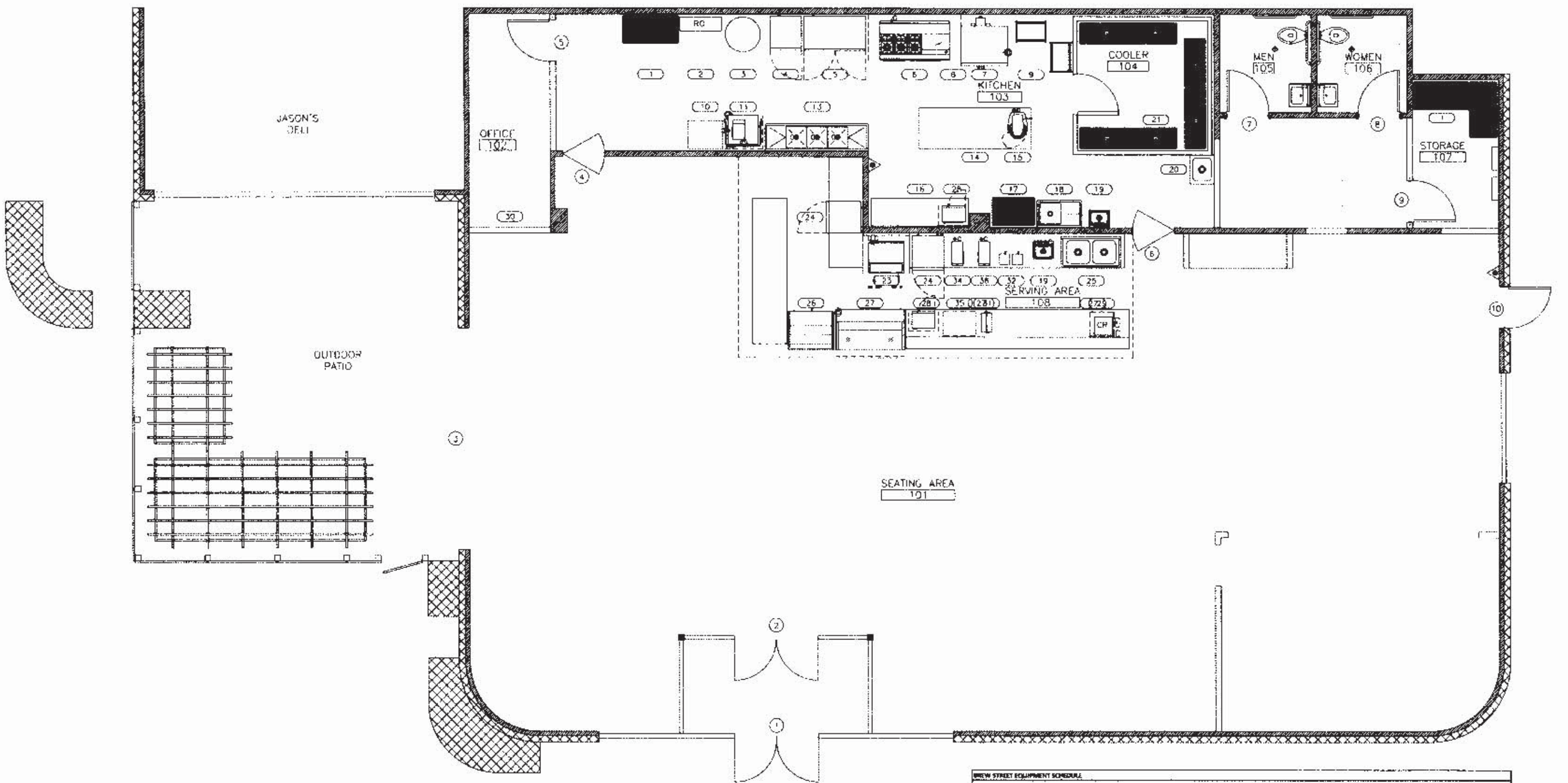

1 EQUIPMENT PLAN
Scale: 1/4" = 1'-0"

BREW STREET EQUIPMENT SCHEDULE

Item No	Qty	Equipment Category	Manufacturer	Model Number	Amps	KW	HP	Volts	Phase	Plug	NEMA	Electrical AFF (in)	Electrical ACH (in)	Cold Water Size (in)	Direct Drain Size (in)	Indir Drain Size (in)	Gas Size (in)
1	3	Shelving Unit, Mobile	Advance Tabco	MC-2448R	-	-	-	-	-	-					-		
2	1	R.O. Unit	Water World	1000 GPD	6.0	-		115	1	X	5-15P	-	-	0.375	-	0.75	-
3		R.O. Unit															
4	1	Refrigerator, Reach-In	True Food Service	T-23	7.6		0.33	115	1	X	5-15P	12	-	-	-	-	-
5	1	Freezer, Reach-in	True Food Service	T-49	5.8	-	0.33	115	1	X	5-15P	12	-	-	-	-	-
6	1	Range, Restaurant, Gas	Vulcan	60SS-6B-24GB-N	-	-	-	-	-	-	-	-	-	-	-	-	-
7	1	Oven, Convection, Gas	Vulcan	VC66GD	9.0		0.5	120	1	X	5-15P	20.5				-	0.75
8	1	Hood			-	-	-	-	-	-	-	-	-			-	-
9	2	Rack, Platter	Advance Tabco	LR6		-											-
10	1	Table, Work, 16gauge, Back Splash w/ Undershelf	Advance Tabco	FLG-240	-							-			-		-
11	1	Warewasher, Door Type, Low Temp	Noble Warewashing	WF-3-HH-[illegible]	13.4		0.75	115	1			60.5	-			2	
13	1	Sink, NSF, 3comp, 14 gauge	Advance Tabco	FS-3-1818-18RL	-		-		-	-							
14	1	Table, Work, 18gauge, Flat Top w/ Undershelf	Advance Tabco	SS-368	-		-										
15	1	Mixer, Counter	Hobart US Foodservice	HL200	8.0		0.5	115	1	X	5-15P	-	4				
16	1	Table, Work, 14gauge, Back Splash w/ Undershelf	Advance Tabco	HLG-247		-		-		-				-			
17	1	Shelving Unit, Mobile	Advance Tabco	MC-[illegible]						-							
18	1	Sink, NSF, 1 comp, 18gauge	Advance Tabco	FC-1-1812-18R-X		-		-	-	-				-			
19	2	Hand Sink, Wall Mount	Advance Tabco	7-PS-54								-					
20	1	Sink, Mop	Advance Tabco	9-OP-20	-		-		-				-		-	-	
21	1	Shelves				-		-		-				-			-
23	1	Ice Maker, Undercounter	Manitowoc Ice	UR 0310A	10.7	1.2	-	115	1	X	5-15P	12	-	0.375	-	0.5	
24	2	Refrigerator, Undercounter	True Food Service	TUC-27	3.9		0.17	115	1	X	5-15P	12	-		-	-	
25	1	Sink, NSF, 2 comp, 16gauge	Advance Tabco	93-22-40		-				-				0.5	1.5		
26	1	Display Case, Refrigerated	Turbo Air	TOMD-W-40SB	11.0	-	0.5	115	1	X	5-15P			-			-
27	1	Bakery Case, Non Refrigerated	True Food Service	TCGD-59	5.9			115	1	-		4					
28	1	Oven, Microwave	ACP, Inc.	RMS10TS	14.0	1.5	-	120	1	X	5-15P	-	11.25	-	-	-	-
29	1	Point of Sales			-	-	-	-	-	-	-	-	-	-	-	-	-
30	1	Safe			-	-	-	-	-	-	-	-	-	-	-	-	-
31	1	Coffee Grinder	Bunn-O-Matic	35600.0000	11.0	-	0.75	120	1	X	5-15P	-	2	-	-	-	-
32	2	Blender, Beverage	Waring Commercial	MX1500XTX	13.0		-	120	1	X	-	-	-	-	-	-	-
33	1	Food Processor	Waring Commercial	WFP14SW	6.0	-	-	120	1	X	-	-	-	-	-	-	-
34	1	Iced Tea Brewer	Bunn-O-Matic	24400.0000	16.0	1.9	-	120	1	X	5-15P		8.1	0.25	-	-	-
35	1	Coffee Machine	LaSpaziale	S2 EK TA	16.0	1.9	-	120	1	X	5-15P	-	8.1	0.25	-	-	-

General Notes

The Maximum Occupancy of this space is 99 including staff.

MIDLAND
PERMITS & INSPECTIONS
APPROVED FOR CONSTRUCTION

No.	Revision/Issue	Date

Firm Name and Address
ROCIO JAQUEZ
9320 W 23RD ST
ODESSA, TEXAS 79763
915.526.3628

Project Name and Address
BREW STREET
4610 N GARFIELD ST., STE. 1
MIDLAND, TEXAS 79705

Project | Sheet
Date 04.29.2016
Scale 1/4" = 1' - 0"
A102

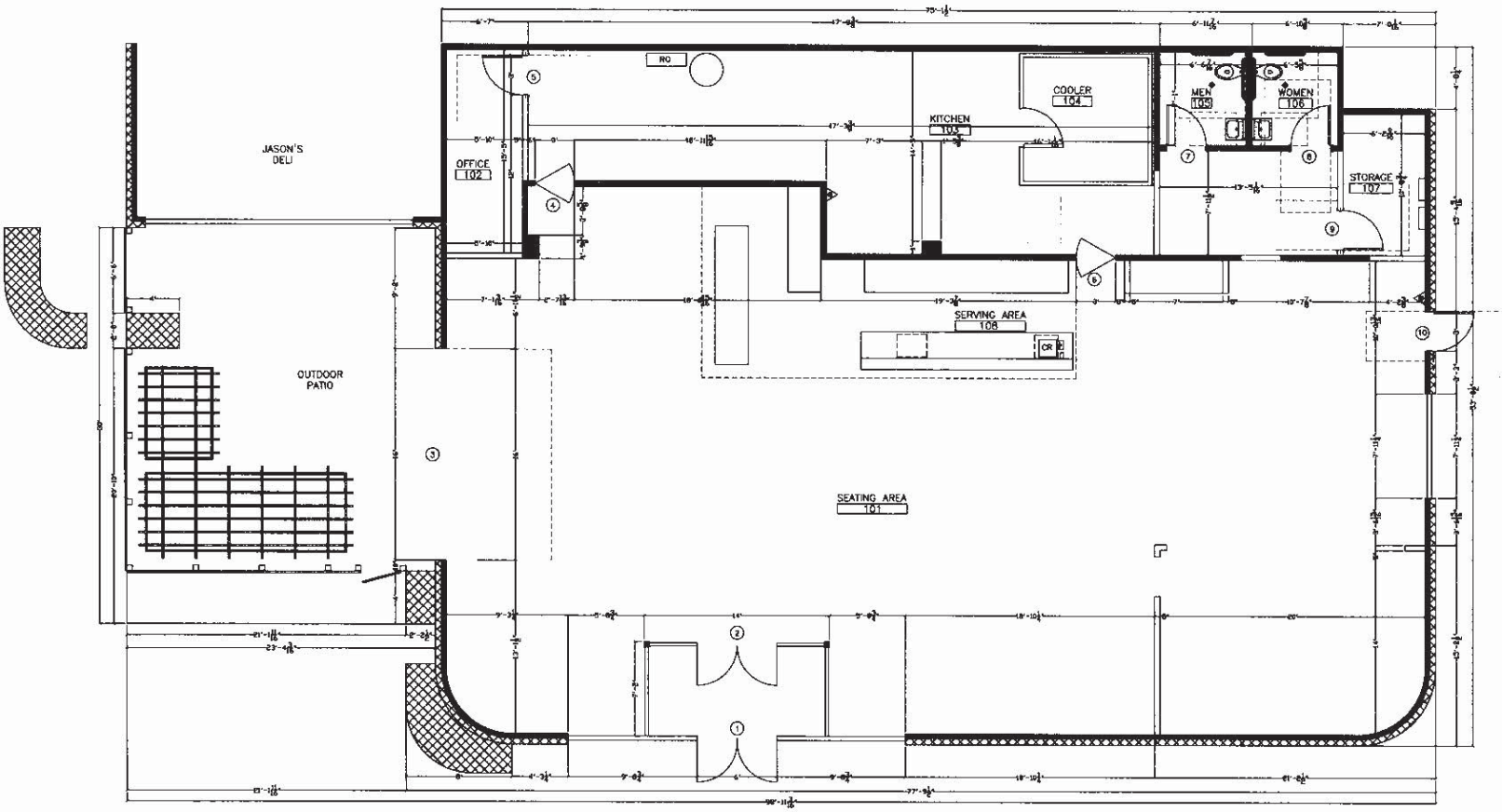

1 FLOOR PLAN
Scale: 1/4" = 1'-0"

FLOOR PLAN LEGEND

EXISTING CONSTRUCTION

NEW CONSTRUCTION

General Notes

The Maximum Occupancy of this space is 99 including staff.

MIDLAND
PERMITS & INSPECTIONS
APPROVED FOR CONSTRUCTION

No.	Revision/Issue	Date

ROCIO JAQUEZ
9320 W 23RD ST
ODESSA, TEXAS 79763
915.526.3628

BREW STREET
4610 N GARFIELD ST., STE. 1
MIDLAND, TEXAS 79705

Project
Date: 04.29.2016
Scale: 1/4" = 1' - 0"

Sheet
A101

13.12

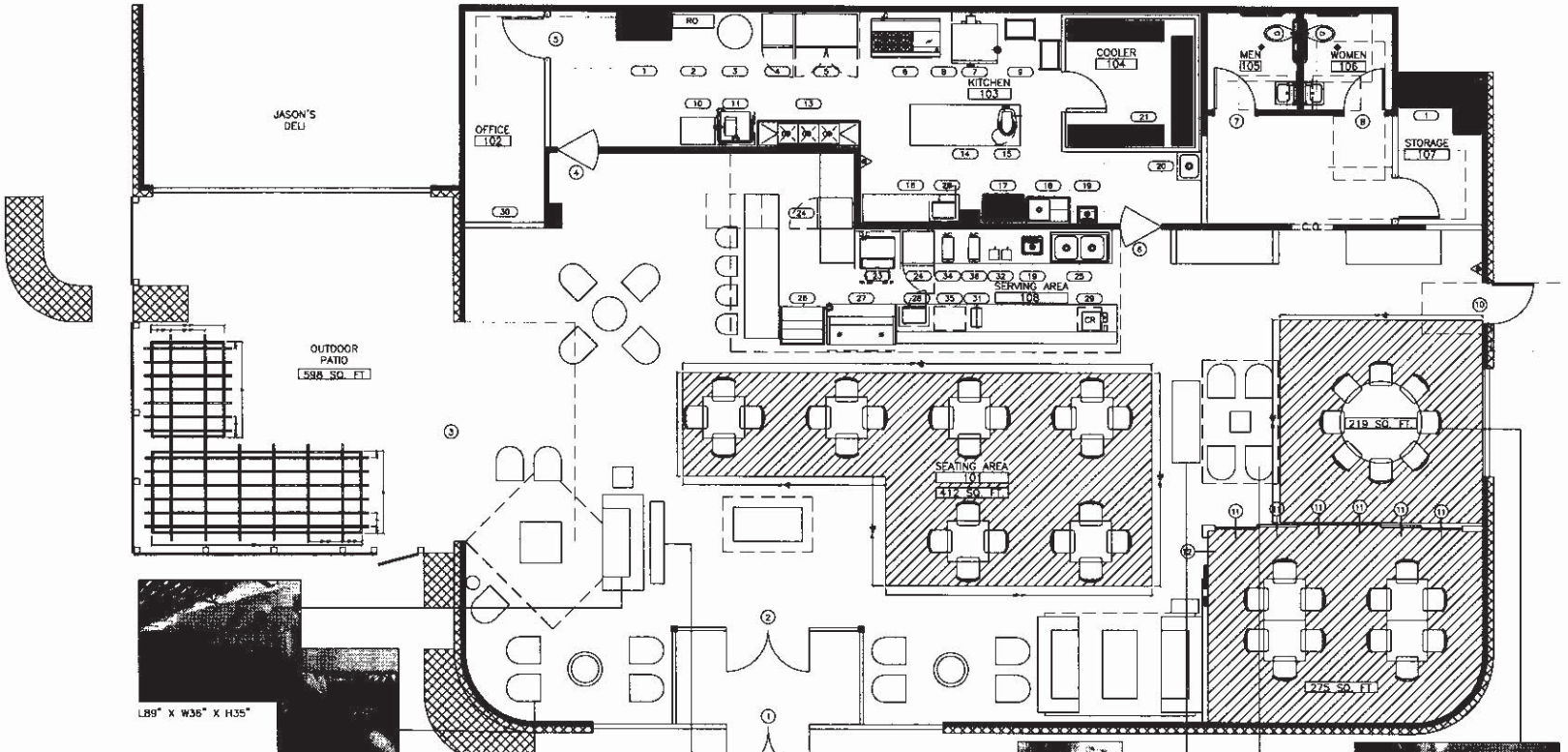

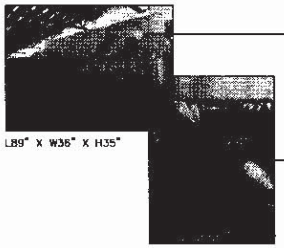
L89" X W36" X H35"

L28" X W30" X H41"

1 SEATING LAYOUT
Scale: 1/4" = 1'-0"

L38" X W14.5" X H84"

L35" X W30" X H33"

BOOK CASE:
L57" X W15.5" X H84"
WHITE CHAIR:
L37" X W28" X H53.5"

SEATING LAYOUT

ASSEMBLY WITHOUT FIXED SEATING

L35" X W30" X H33"

L70.5" X W17.5" X H81"

L29" X W32" X H42"

General Notes

The Maximum Occupancy of this space is 99 including staff.

MIDLAND

PERMITS & INSPECTIONS
APPROVED FOR CONSTRUCTION

No.	Revision/Issue	Date
1	REVISION PER CITY	5/25/16

ROCIO JAQUEZ
9320 W 23RD ST
ODESSA, TEXAS 79763
915.526.3628

BREW STREET
4610 N GARFIELD ST., STE. 1
MIDLAND, TEXAS 79705

Project	Sheet
Date: 05.25.2016	A101.2
Scale: 1/4" = 1'-0"	

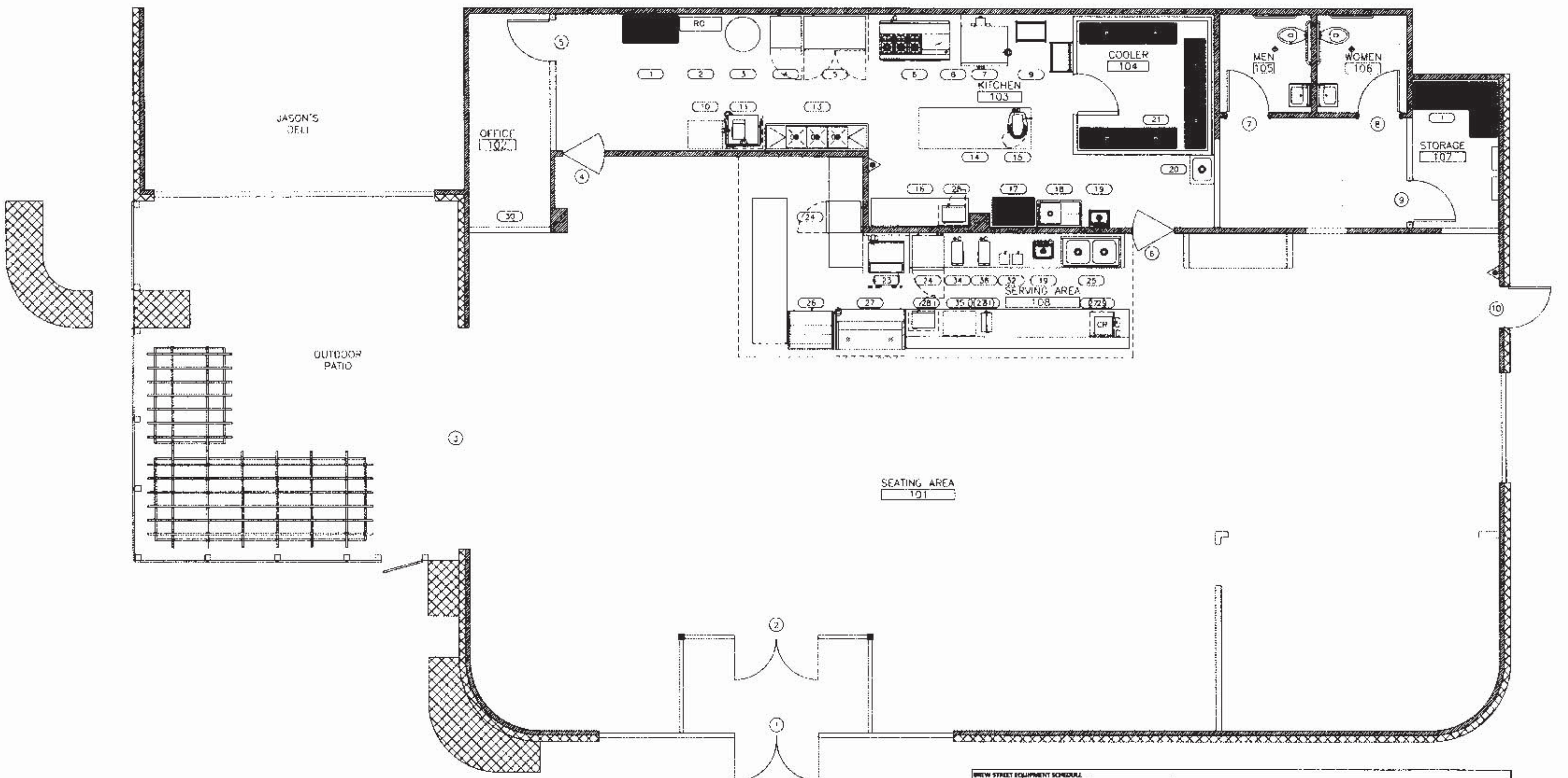

1 EQUIPMENT PLAN
Scale: 1/4" = 1'-0"

BREW STREET EQUIPMENT SCHEDULE

Item No	Qty	Equipment Category	Manufacturer	Model Number	Amps	KW	HP	Volts	Phase	Plug	NEMA	Electrical AFF (in)	Electrical ADH (in)	Cold Water Size (in)	Direct Drain Size (in)	Indirect Drain Size (in)	Gas Size (in)
1	3	Shelving Unit, Mobile	Advance Tabco	MC-2448R	-	-	-	-	-	-					-		
2	1	R.O. Unit	Water World	1000 GPD	6.0	-		115	1	X	5-15P	-	-	0.375	-	0.75	-
3		R.O. Unit															
4	1	Refrigerator, Reach-In	True Food Service	T-23	7.6	-	0.33	115	1	X	5-15P	12	-	-	-	-	-
5	1	Freezer, Reach-in	True Food Service	T-49	5.8	-	0.33	115	1	X	5-15P	12	-	-	-	-	-
6	1	Range, Restaurant, Gas	Vulcan	60SS-6B-24GB-N	-	-	-	-	-	-	-	-	-	-	-	-	-
7	1	Oven, Convection, Gas	Vulcan	VC66GD	9.0		0.5	120	1	X	5-15P	20.5				-	0.75
8	1	Hood			-	-	-	-	-	-	-	-	-				-
9	2	Rack, Platter	Advance Tabco	LR6		-											-
10	1	Table, Work, 16gauge, Back Splash w/ Undershelf	Advance Tabco	FLG-240	-							-			-		-
11	1	Warewasher, Door Type, Low Temp	Noble Warewashing	WF-3-HH-[illegible]	13.4		0.75	115	1			60.5	-			2	-
13	1	Sink, NSF, 3comp, 14gauge	Advance Tabco	FS-3-1818-18RL	-		-		-	-		-					
14	1	Table, Work, 18gauge, Flat Top w/ Undershelf	Advance Tabco	SS-368	-		-				-				-		
15	1	Mixer, Counter	Hobart US Foodservice	HL200	8.0		0.5	115	1	X	5-15P	-	4				
16	1	Table, Work, 18gauge, Back Splash w/ Undershelf	Advance Tabco	HLG-247		-		-		-				-			
17	1	Shelving Unit, Mobile	Advance Tabco	MC-2448R						-							
18	1	Sink, NSF, 1 comp, 18gauge	Advance Tabco	FC-1-1812-18R-X		-		-	-	-				-			
19	2	Hand Sink, Wall Mount	Advance Tabco	7-PS-54								-					
20	1	Sink, Mop	Advance Tabco	9-OP-20	-		-		-				-		-	-	
21	1	Shelves				-		-	-	-				-	-	-	-
23	1	Ice Maker, Undercounter	Manitowoc Ice	UR 0310A	10.7	1.2	-	115	1	X	5-15P	12	-	0.375	-	0.5	
24	2	Refrigerator, Undercounter	True Food Service	TUC-27	3.9		0.17	115	1	X	5-15P	12	-		-	-	
25	1	Sink, NSF, 2 comp, 16gauge	Advance Tabco	93-22-40		-				-				0.5	1.5		
26	1	Display Case, Refrigerated	Turbo Air	TOMW-40SB	11.0	-	0.5	115	1	X	5-15P			-			-
27	1	Bakery Case, Non Refrigerated	True Food Service	TCGG-59	5.9			115	1	-		4					
28	1	Oven, Microwave	ACP, Inc.	RMS10TS	14.0	1.5	-	120	1	X	5-15P	-	11.25	-	-	-	-
29	1	Point of Sales			-	-	-	-	-	-	-	-	-	-	-	-	-
30	1	Safe			-	-	-	-	-	-	-	-	-	-	-	-	-
31	1	Coffee Grinder	Bunn-O-Matic	35600.0000	11.0	-	0.75	120	1	X	5-15P	-	2	-	-	-	-
32	1	Blender, Beverage	Waring Commercial	MX1500XTX	13.0		-	120	1	X	-	-	-	-	-	-	-
33	1	Food Processor	Waring Commercial	WFP14SW	6.0	-	-	120	1	X	-	-	-	-	-	-	-
34	1	Iced Tea Brewer	Bunn-O-Matic	24400.0000	20.0	1.9	-	120	1	X	5-15P		81	0.25	-	-	-
35	1	Coffee Machine	LaSpaziale	S2 EK TA	16.0	1.9	-	120	1	X	5-15P	-	81	0.25	-	-	-

General Notes

The Maximum Occupancy of this space is 99 including staff.

MIDLAND
PERMITS & INSPECTIONS
APPROVED FOR CONSTRUCTION

No.	Revision/Issue	Date

Firm Name and Address
ROCIO JAQUEZ
9320 W 23RD ST
ODESSA, TEXAS 79763
915.526.3628

Project Name and Address
BREW STREET
4610 N GARFIELD ST., STE. 1
MIDLAND, TEXAS 79705

Project	Sheet
Date 04.29.2016	A102
Scale 1/4" = 1' - 0"	

MIDLAND
Planning Division

Specific Use Designation with Term for the Sale of Alcoholic Beverages for On-Premises Consumption

Project Number: SUD-20-0072

Case Number: _____

Applicant *(if acting as Agent, see affidavit on page 2)*		Phone (432) 230-8841	
Printed Name: Alexandra Brinker		Email alli@brewstreetbakery.com	
Address 4610 N. Garfield St. D-1A	City Midland	State TX	Zip 79705

Property Owner		Phone (817) 927-0050	
Printed Name: Colonnade at Polo Park Woodcrest LLC		Email info@woodcrestcapital.com	
Address 3113 S. University Dr. Suite 600	City Fort Worth	State TX	Zip 76109

Representative *(if different from Applicant or Property Owner)*		Phone ( )	
Firm: _____		Email	
Printed Name:			
Address	City	State	Zip

Street Address: 4610 N. Garfield St. D-1A Midland, TX 79705

Business Name: Brew St.

Legal Description
Lot: 1 Block: 8 Subdivision: Polo Park Addition, Section 3

Current Zoning:

Reason for Request: Change of Hours & Alcohol Service hours

Type of Business *(restaurant, bar, lounge, nightclub, etc.)*: Bakery / Restaurant

Proposed/Current Days and Hours of Operation: 6:30 AM - 10 PM Monday - Wednesday 6:30 AM - 11pm Thursday - Saturday 6:30 AM - 10pm Sunday

Proposed Days and Hours of Alcohol Service: 10 AM - 10PM Monday - Wednesday 10AM - 11pm Thursday - Saturday 10AM - 10pm Sunday

Total Square Footage of Business: 4472 sq. Ft

Square Footage of Alcohol Serviceable Area: 2935 sqFt.

Restroom Fixtures:				
	Men	**Toilets/Urinals:** 1 / 1	**Bathroom Sinks:** 1
	Women	**Toilets:** 1	**Bathroom Sinks:** 1

Submittal and Fees

Items to be submitted with this application form:

- Application Fee – Payable to the 'City of Midland'
- Dimensioned Floor Plan showing:
  - Seating
  - Exits
  - Restrooms
  - Kitchen (if applicable)
  - Total Square Footage
  - Serviceable Square Footage
- Dimensioned Site Plan showing:
  - Parking
  - Business Footprint
- Digital Copies of Floor Plan & Site Plan (PDF/JPEG)

Signatures

Applicant (signature): Alli Brei	Date: 2-28-20
Applicant (printed): Alexandra Brinker	
Property Owner (signature):	Date:

Property Owner (printed) : _____

The Specific Use Designation with Term for the sale of all alcoholic beverages shall be considered officially received in the Planning office only when it has been submitted in full compliance with the provisions of Section 212 of the Texas Local Government Code and the Zoning Code of Ordinances of the City of Midland and when such required items for the application are also received.

All materials, including exhibits, submitted in support of an application, or displayed during a public hearing, shall remain the property of the City of Midland.

If an agent is authorized by the property owner to file and execute the application on behalf of the property owner, the agent must complete the affidavit below.

STATE OF TEXAS
COUNTY OF MIDLAND

Before me, the undersigned authority, on this day personally appeared _____ who, being by me duly sworn, upon oath says: That (s)he is authorized by _____, the owner of the above described property, to fully represent him/her in this application and that (s)he had the legal right, power and authority to sign said owner's name hereto as his/her attorney in fact.

_____
Authorized Agent (*signature*)

Subscribed and sworn to before me, this _____ day of _____, 20 ___, to certify which witness my hand and seal of office.

_____
NOTARY PUBLIC, MIDLAND COUNTY, TEXAS

****Application will not be considered for scheduling until reviewed by a planner.****

Submittal and Fees

Items to be submitted with this application form:

- Application Fee – Payable to the 'City of Midland'
- Dimensioned Floor Plan showing:
  - Seating
  - Exits
  - Restrooms
  - Kitchen (if applicable)
  - Total Square Footage
  - Serviceable Square Footage
- Dimensioned Site Plan showing:
  - Parking
  - Business Footprint
- Digital Copies of Floor Plan & Site Plan (PDF/JPEG)

Signatures

Applicant (signature): Alli Brei	Date: 2-28-20
Applicant (printed): Alexandra Brinker	
Property Owner (signature):	Date:
Property Owner (printed):	

The Specific Use Designation with Term for the sale of all alcoholic beverages shall be considered officially received in the Planning office only when it has been submitted in full compliance with the provisions of Section 212 of the Texas Local Government Code and the Zoning Code of Ordinances of the City of Midland and when such required items for the application are also received.

All materials, including exhibits, submitted in support of an application, or displayed during a public hearing, shall remain the property of the City of Midland.

If an agent is authorized by the property owner to file and execute the application on behalf of the property owner, the agent must complete the affidavit below.

STATE OF TEXAS
COUNTY OF MIDLAND

Colonnade at Polo Park Woodcrest Limited Partnership

Before me, the undersigned authority, on this day personally appeared Matthew Roberts who, being by me duly sworn, upon oath says: That (s)he is authorized by _____, the owner of the above described property, to fully represent him/her in this application and that (s)he had the legal right, power and authority to sign said owner's name hereto as his/her attorney in fact.

Matthew Roberts

Authorized Agent (*signature*)

Subscribed and sworn to before me, this 28th day of February 2020, to certify which witness my hand and seal of office.

TERESA JO MANIRE
Notary Public
STATE OF TEXAS
ID#4210268
My Comm. Jan. 31, 2022

NOTARY PUBLIC [illegible] COUNTY, TEXAS
Tarrant

"Application will not be considered for scheduling until reviewed by a planner."

FOR OFFICE USE ONLY		
☒ Property Owner Authorization	☒ Dimensioned Floor Plan	RECEIVED FEB 28 2020
☒ Application Fee	☒ Site Plan	
Check # 300.00	☐ Plans in Digital Format (PDF/JPEG)	
Received By:	Date: BY:	

****Application will not be considered for scheduling until reviewed by a planner.****

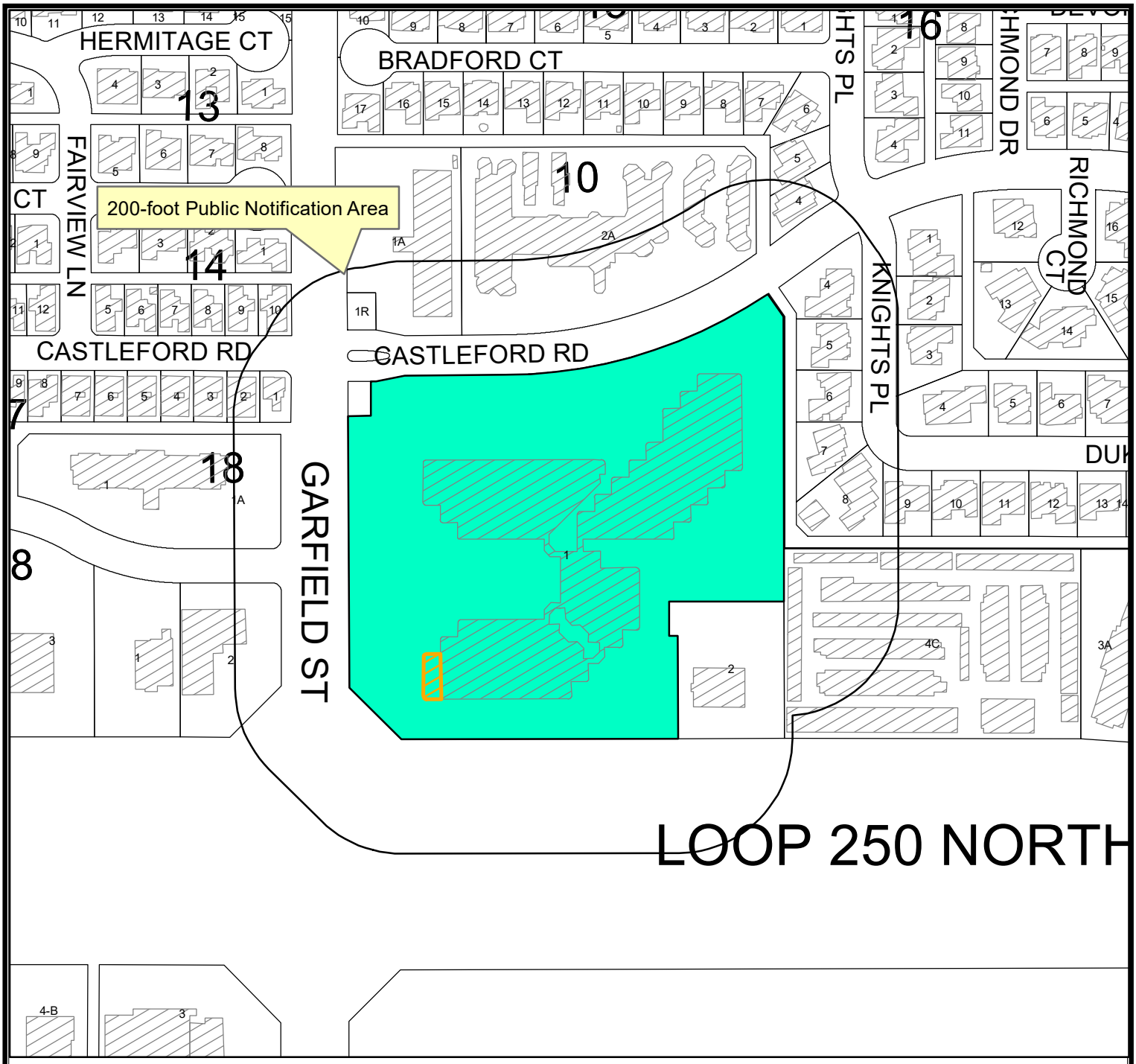

LOCATION MAP

SUD-20-0072 **Scale: 1" = 250'**

Consider a request for a Specific Use Designation With Term for the sale of all alcoholic beverages, for on-premises consumption, in a restaurant, on a 4,472 square foot portion of Lot 1, Block 8, Polo Park , Section 3, City and County of Midland, Texas.Generally located on the southeast corner of the intersection of N. Garfield Street and Castleford Road. (Council District 1)

LEGEND

- CITY LIMITS
- PARCEL
- PRIVATE BLDGS
- SECTION OF BLDG BEING CONSIDERED

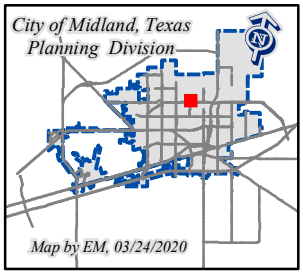

©THE CITY OF MIDLAND - 2020
THIS DATA IS NOT A SUBSTITUTION FOR A SURVEY PRODUCT, NOR IS IT DESIGNED TO BE USED AS A PRIMARY TOOL IN PERMITTING OR OTHER DECISIONS BASED SOLELY ON THE INFORMATION CONTAINED HEREIN.
THE CITY OF MIDLAND SHALL NOT BE RESPONSIBLE I ANY DECISIONS BASED UPON THE USE OF THIS DAT

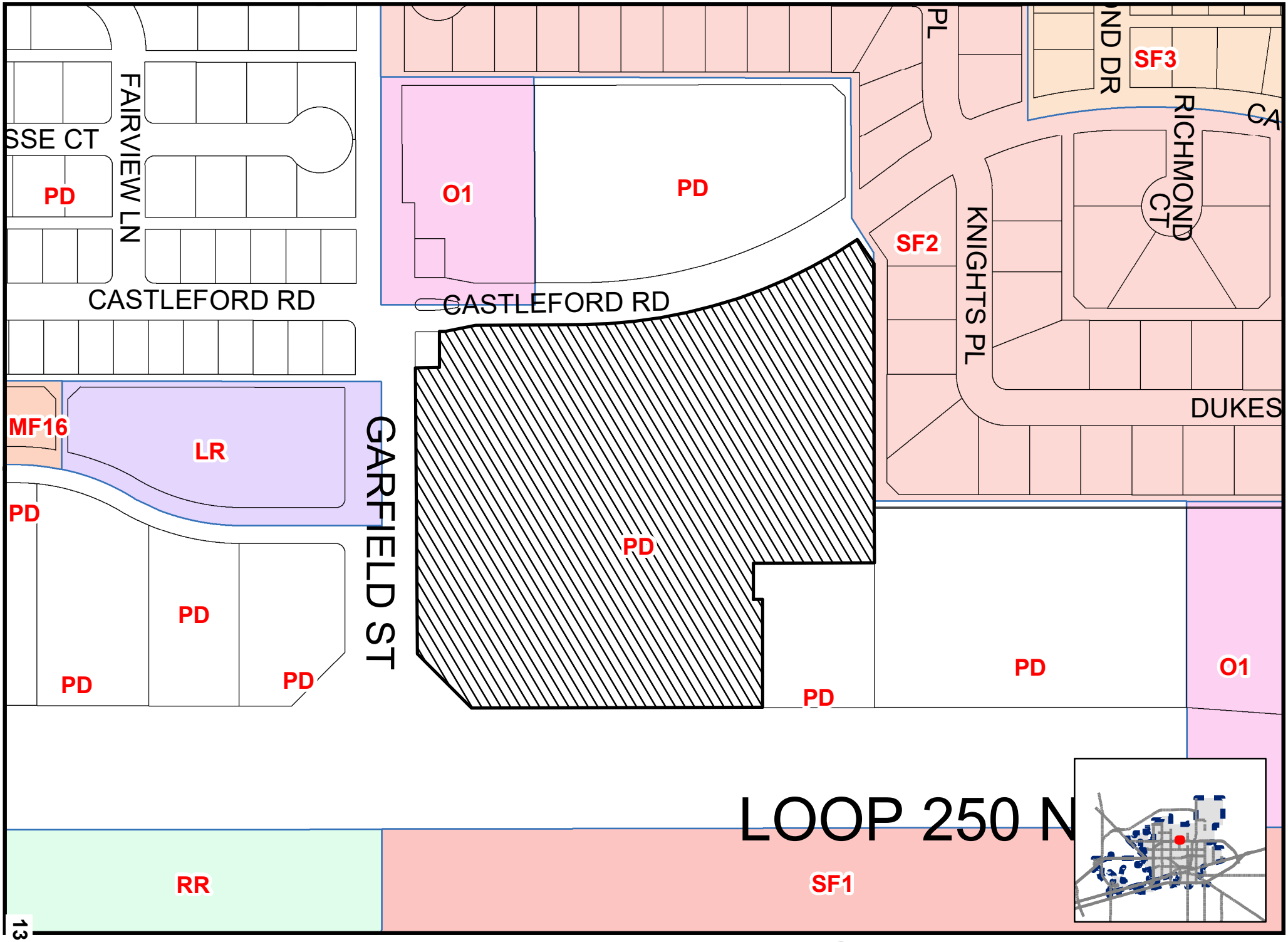

13.20

Map By EM, 03/06/2020

TLU-20-0072

Scale: 1" = 200'

ZONING MAP

© THE CITY OF MIDLAND - 2020: THIS DATA IS NOT A SUBSTITUTION FOR A SURVEY PRODUCT, NOR IS IT DESIGNED TO BE USED AS A PRIMARY TOOL IN PERMITTING OR OTHER DECISIONS BASED SOLELY ON THE INFORMATION CONTAINED HEREIN. THE CITY OF MIDLAND SHALL NOT BE RESPONSIBLE FOR ANY DECISIONS BASED UPON THE USE OF THIS DATA.

ORDINANCE NO. 7771

AN ORDINANCE AMENDING ORDINANCE NO. 7324, WHICH ADOPTED A SITE PLAN FOR A "PLANNED DISTRICT" FOR A SHOPPING CENTER SO AS TO ADOPT AN AMENDED SITE PLAN; CONTAINING A CUMULATIVE CLAUSE; CONTAINING A SAVINGS AND SEVERABILITY CLAUSE; PROVIDING FOR A MAXIMUM PENALTY OR FINE OF TWO THOUSAND DOLLARS ($2,000.00); AND ORDERING PUBLICATION

WHEREAS, the City Planning and Zoning Commission and the Governing Body of the City of Midland, in compliance with the City Charter and the State law with reference to the creation of "Planned Districts" under the zoning ordinance regulations and zoning map, have given the requisite notices by United States Mail, publication and otherwise; and after a full and fair hearing to all of the property owners generally and particularly to those interested persons situated in the affected area and in the vicinity thereof; the Governing Body finds that the public health, safety and general welfare will be best served by amending the site plan for a "Planned District" for a Shopping Center by amending Ordinance No. 7324; and

WHEREAS, after a full and fair public hearing at which all parties in interest were offered an opportunity to be heard, all pursuant to law, the Council finds it to be in the public interest to amend the site plan adopted by Ordinance No. 7324;

NOW, THEREFORE, BE IT ORDAINED BY THE CITY COUNCIL OF THE CITY OF MIDLAND, TEXAS:

SECTION ONE. That the "Planned District" site plan adopted for the property described in Section One of

Ordinance No. 7324, specifically Lot 1, Block 8, Polo Park, Section III, City and County of Midland, Texas, shall be amended in its entirety as set forth in Exhibit "A", attached hereto and incorporated herein by reference subject to the following conditions:

A. That the maximum sign area for all free standing signs for this development not exceed 640 square feet.

B. That no future free standing sign associated with this development be allowed on the Loop 250 frontage.

C. That the Site Plan (Exhibits A & B) be adhered to in regard to the locations and types of signs proposed for this development.

SECTION TWO. The provisions of this ordinance are to be cumulative of all other ordinances or parts of ordinances governing or regulating the same subject matter as that covered herein; provided, however, that all prior ordinances or parts of ordinances inconsistent with or in conflict with any of the provisions of this ordinance are hereby expressly repealed to the extent of any such inconsistency or conflict.

SECTION THREE. If any section, subsection, sentence, clause or phrase of this ordinance is, for any reason, held to be unconstitutional or invalid, such holding shall not affect the validity of the remaining portions of this ordinance. The Council of the City of Midland hereby declares that it would have passed this ordinance and each section, subsection, sentence, clause, or phrase hereof irrespective of the fact that any one or more sections, subsections, sentences, clauses, or phrases be declared

unconstitutional or invalid.

SECTION FOUR. The penalty for violation of this ordinance shall be in accordance with the general penalty provisions contained in Section 1-3-1 of the City Code of Midland, Texas, which provides for a fine not exceeding two thousand dollars ($2,000.00).

SECTION FIVE. The City Secretary is hereby authorized and directed to publish the descriptive caption of this ordinance in the manner and for the length of time prescribed by the law as an alternative method of publication.

The above and foregoing ordinance was duly proposed, read in full and adopted on first reading, the 8th day of September, A.D., 1998; and passed to second reading on motion of Council member Brooks, seconded by Council member Cuevas, by the following vote:

Council members voting "AYE": Brooks, Cuevas, Wood, Brown, Burns, Simpson and Washburn

Council members voting "NAY": None

The above and foregoing ordinance was read in full and finally adopted by the following vote upon motion of Council member Brooks, seconded by Council member Cuevas, on the 22nd day of September, A.D., 1998, at a regular meeting of the City Council:

Council members voting "AYE": Brooks, Cuevas, Wood, Brown, Burns, Simpson and Washburn

Council members voting "NAY": None

PASSED AND APPROVED THIS 22nd **day of** September **,**

A.D., 1998.

Robt. E. Burns, Mayor

ATTEST:

Kaylah J. McCord

Kaylah J. McCord, City Secretary

APPROVED AS TO FORM:

Keith Stretcher, City Attorney

ord\planning\plndist\Z-98-022 Red Oak

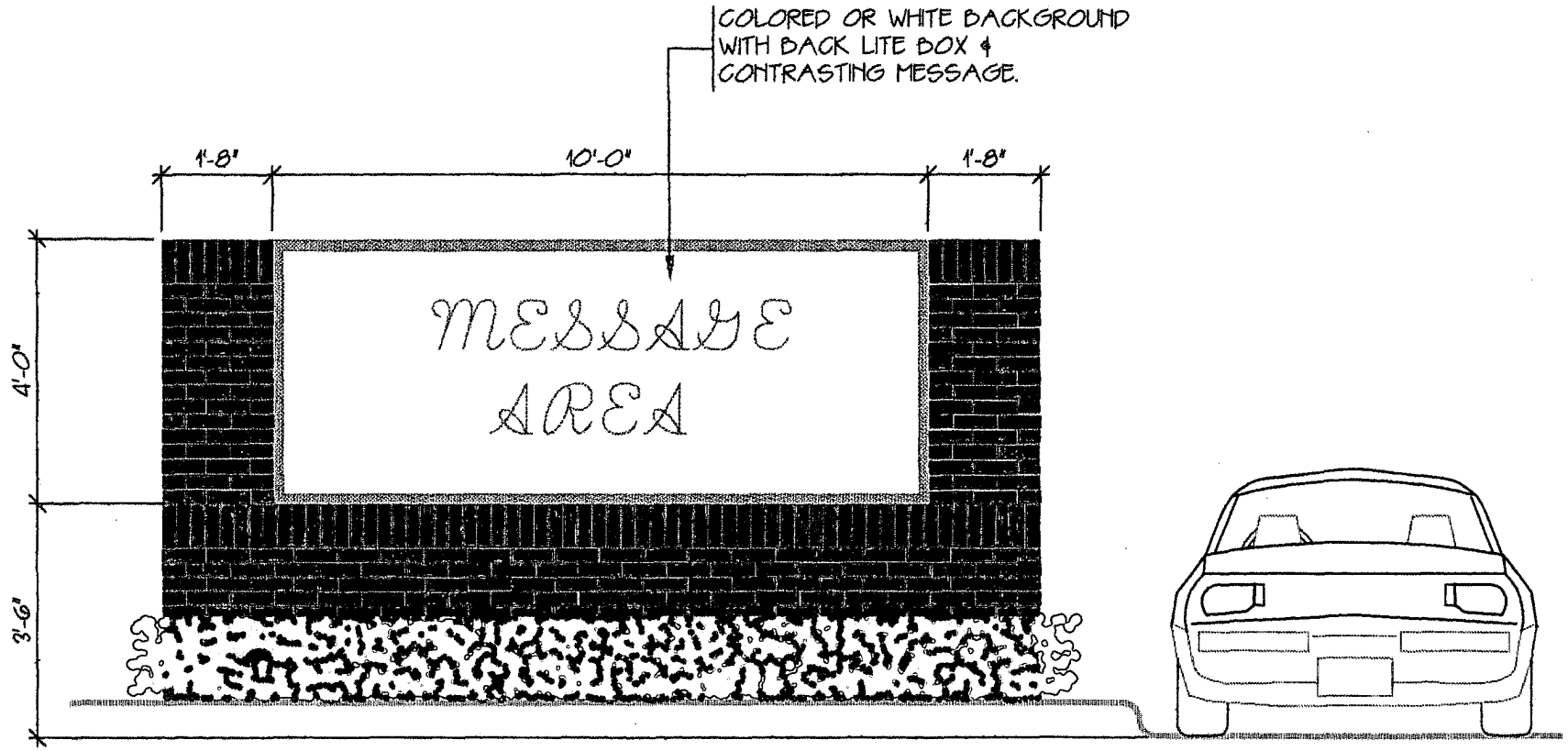

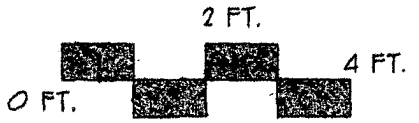

MONUMENT SIGN PROPOSAL

COLONADE SHOPPING CENTER
MIDLAND, TEXAS

RECEIVED
AUG 25 1998
PLANNING & DEVELOPMENT
CITY OF MIDLAND

VANDERGRIFF GROUP
ARCHITECTS • PLANNERS
312 N. BIG SPRING, SUITE 100 (915) 687-0781 MIDLAND, TEXAS
MEMBER AMERICAN INSTITUTE OF ARCHITECTS

8-11-98

EXHIBIT B CASE NO. Z-98-022

13.25

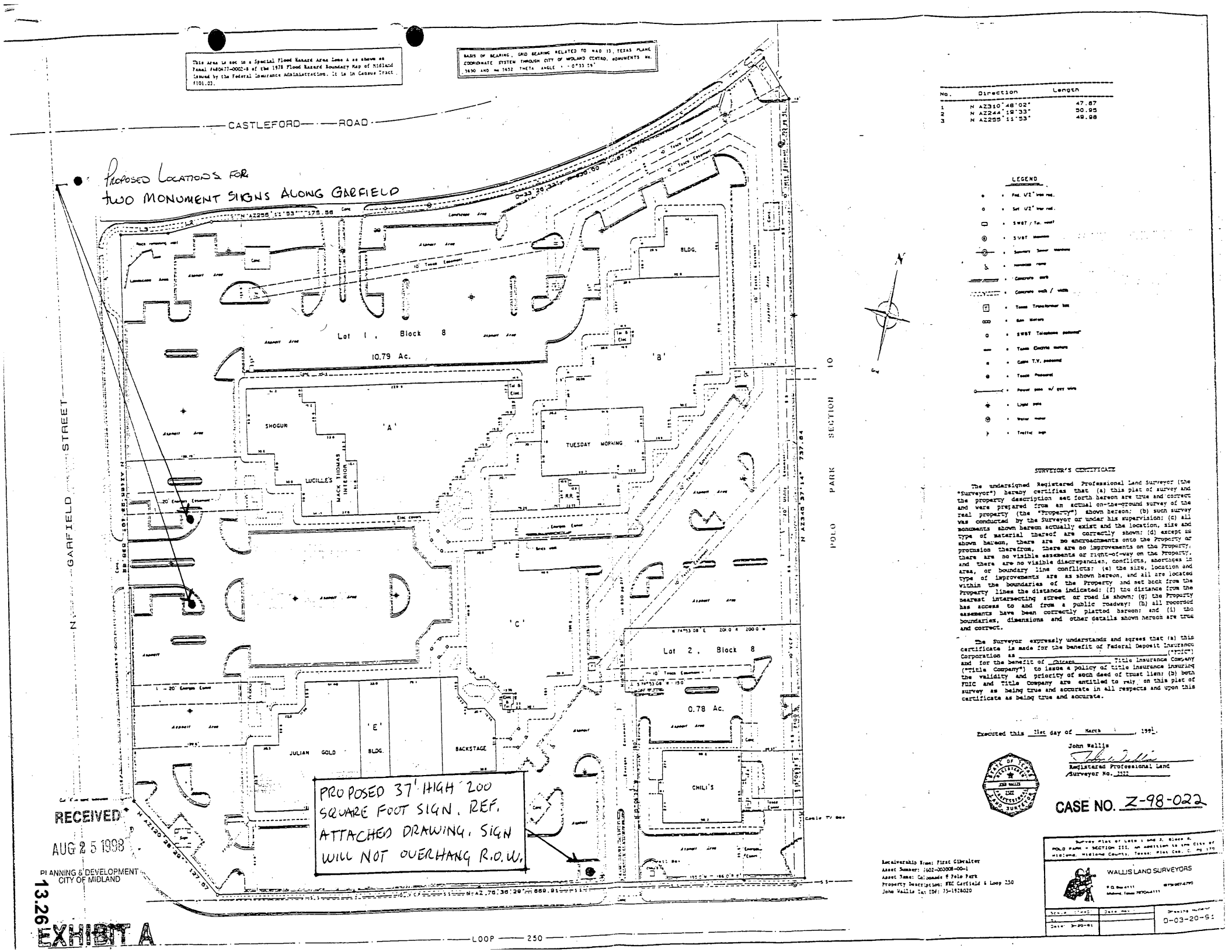

No.	Direction	Length
1	N AZ310°48'02"	47.67
2	N AZ244°19'33"	30.95
3	N AZ259°11'53"	49.98

LEGEND

- Fnd. 1/2" iron rod.
- Set 1/2" iron rod.
- SWBT / Tel. manhole
- SWBT Manhole
- Sanitary Sewer manhole
- Handhole found
- Concrete walk
- Concrete curb / valley
- Texas Transformer box
- Gas Marker
- SWBT Telephone pedestal
- Texas Electric marker
- Cable T.V. pedestal
- Texas Pedestal
- Power pole w/ guy wire
- Light pole
- Water meter
- Traffic sign

SURVEYOR'S CERTIFICATE

The undersigned Registered Professional Land Surveyor (the "Surveyor") hereby certifies that (a) this plat of survey and the property description set forth hereon are true and correct and were prepared from an actual on-the-ground survey of the real property (the "Property") shown hereon; (b) such survey was conducted by the Surveyor or under his supervision; (c) all monuments shown hereon actually exist and the location, size and type of material thereof are correctly shown; (d) except as shown hereon, there are no encroachments onto the Property or protrusion therefrom, there are no improvements on the Property, there are no visible easements or right-of-way on the Property, and there are no visible discrepancies, conflicts, shortages in area, or boundary line conflicts; (e) the size, location and type of improvements are as shown hereon, and all are located within the boundaries of the Property and set back from the Property lines the distance indicated; (f) the distance from the nearest intersecting street or road is shown; (g) the Property has access to and from a public roadway; (h) all recorded easements have been correctly platted hereon; and (i) the boundaries, dimensions and other details shown hereon are true and correct.

The Surveyor expressly understands and agrees that (a) this certificate is made for the benefit of Federal Deposit Insurance Corporation as _____ ("FDIC") and for the benefit of Chicago Title Insurance Company ("Title Company") to issue a policy of title insurance insuring the validity and priority of such deed of trust lien; (b) both FDIC and Title Company are entitled to rely on this plat of survey as being true and accurate in all respects and upon this certificate as being true and accurate.

Executed this 21st day of March, 1991.

John Wallis

Registered Professional Land Surveyor No. 1572

CASE NO. Z-98-022

Receivership Name: First Gibralter
Asset Number: 1601-003008-00-1
Asset Name: Colonnade @ Polo Park
Property Description: NEC Garfield & Loop 250
John Wallis Tax ID#: 75-1928020

Survey Plat of Lots 1 and 2, Block 8, POLO PARK - SECTION III, an addition to the City of Midland, Midland County, Texas; Plat Cab. C, Pg. 170

WALLIS LAND SURVEYORS

P.O. Box 4111, Midland, Texas 79704-4111, (915) 697-4790

Scale: 1"=60'	Date Rev:	Drawing number:
Job:		D-03-20-91
Date: 3-20-91		

RECEIVED
AUG 25 1998
PLANNING & DEVELOPMENT
CITY OF MIDLAND

13.26

EXHIBIT A

ORDINANCE NO. 9630

AN ORDINANCE CHANGING THE ZONING USE CLASSIFICATION OF THE PROPERTY DESCRIBED AS A 5,141-SQUARE FOOT PORTION OF LOT 1, BLOCK 8, POLO PARK ADDITION, SECTION 3, CITY AND COUNTY OF MIDLAND, TEXAS (GENERALLY LOCATED SOUTHEAST OF THE INTERSECTION OF NORTH GARFIELD STREET AND CASTLEFORD ROAD), WHICH IS PRESENTLY ZONED PD, PLANNED DISTRICT FOR A SHOPPING CENTER, BY PERMITTING SAID PROPERTY TO BE USED UNDER A SPECIFIC USE PERMIT WITH TERM FOR THE SALE OF ALL ALCOHOLIC BEVERAGES IN A RESTAURANT FOR ON-PREMISES CONSUMPTION; MAKING SAID PERMIT SUBJECT TO CERTAIN CONDITIONS AND RESTRICTIONS CONTAINED HEREIN; CONTAINING A CUMULATIVE CLAUSE; CONTAINING A SAVINGS AND SEVERABILITY CLAUSE; PROVIDING FOR A MAXIMUM PENALTY OR FINE OF TWO THOUSAND DOLLARS ($2,000.00); AND ORDERING PUBLICATION

WHEREAS, the City Planning and Zoning Commission and the Governing Body of the City of Midland, Texas, in compliance with the City Charter and the State law with reference to the granting of specific use permits under the zoning ordinance regulations and zoning map, have given the requisite notices by United States mail, publication and otherwise; and after holding due hearings affording a full and fair hearing to all of the property owners generally, and particularly to those interested persons situated in the affected area and in the vicinity thereof, the Governing Body of the City of Midland finds that the public convenience will be best served by the granting of a Specific Use Permit With Term, set out hereinafter, on the property described in Section One hereof;

NOW, THEREFORE, BE IT ORDAINED BY THE CITY COUNCIL OF THE CITY OF MIDLAND, TEXAS:

SECTION ONE. That the zoning use classification of the following described property, which is presently zoned PD, Planned District for a Shopping Center, to-wit:

> A 5,141-square foot portion of Lot 1, Block 8, Polo Park Addition, Section 3, City and County of Midland, Texas;

is hereby changed to permit said property to be used under a Specific Use Permit With Term

for the sale of all alcoholic beverages for on-premises consumption in a restaurant, together with the uses permitted in the present PD, Planned District for a Shopping Center.

SECTION TWO. That said property shall be subject to the following conditions and restrictions:

A. That the serviceable area of the restaurant shall be limited to 5,141 contiguous square feet as shown in Exhibit "A", which is attached hereto and incorporated herein for all purposes.

B. That the enclosed patio area, as shown in Exhibit "A", shall have an exit only gate.

C. That the occupancy of the restaurant shall not exceed the maximum occupancy determined by the Building Code and Fire Code.

D. That the restaurant shall meet all requirements of the Fire Department and the Code Administration Division.

E. That the sale and on-premises consumption of alcoholic beverages shall conform to all applicable state and local laws.

F. That the days and hours of alcoholic beverage sales and consumption shall be limited to the following:

Monday through Wednesday from 10:00 a.m. to 7:00 p.m.; and
Thursday through Saturday from 10:00 a.m. to 11:00 p.m.

G. That Ordinance No. 9573 is hereby repealed.

SECTION THREE. The provisions of this ordinance are to be cumulative of all other ordinances or parts of ordinances governing or regulating the same subject matter as that covered herein; provided, however, that all prior ordinances or parts of ordinances, inconsistent with or in conflict with any of the provisions of this ordinance are hereby expressly repealed to the extent of any such inconsistency or conflict.

SECTION FOUR. If any section, subsection, sentence, clause or phrase of this ordinance is, for any reason, held to be unconstitutional or invalid, such holding shall not affect the validity of the remaining portions of this ordinance. The Council of the City of Midland hereby declares that it would have passed this ordinance and each section, subsection, sentence, clause, or phrase hereof irrespective of the fact that any one or more

sections, subsections, sentences, clauses, or phrases be declared unconstitutional or invalid.

SECTION FIVE. The penalty for violation of this ordinance shall be in accordance with the general penalty provisions contained in Section 1-3-1 of the City Code of Midland, Texas, which provides for a fine not exceeding two thousand dollars ($2,000.00).

SECTION SIX. The City Secretary is hereby authorized and directed to publish the descriptive caption of this ordinance in the manner and for the length of time prescribed by the law as an alternative method of publication.

The above and foregoing ordinance was duly proposed, read in full and adopted on first reading, the 10th day of January, A.D., 2017; and passed to second reading on motion of Council member Robnett, seconded by Council member Hotchkiss, by the following vote:

Council members voting "AYE": Hotchkiss, Love, Sparks, Morales, Dufford, Lacy, Robnett

Council members voting "NAY": None

The above and foregoing ordinance was read in full and finally adopted by the following vote upon motion of Council member Lacy, seconded by Council member Hotchkiss, on the 24th day of January, A.D., 2017, at a regular meeting of the City Council:

Council members voting "AYE": Hotchkiss, Love, Sparks, Morales, Dufford, Lacy, Robnett

Council members voting "NAY": None

PASSED AND APPROVED THIS 24th day of January, A.D., 2017.

Jerry F. Morales, Mayor

ATTEST:

Amy M. Turner, City Secretary

APPROVED AS TO CONTENT
AND COMPLETENESS:

Frank Salvato, Assistant City Manager

Charles Harrington, Director of Development Services

APPROVED ONLY AS TO FORM:

John Ohnemiller, City Attorney

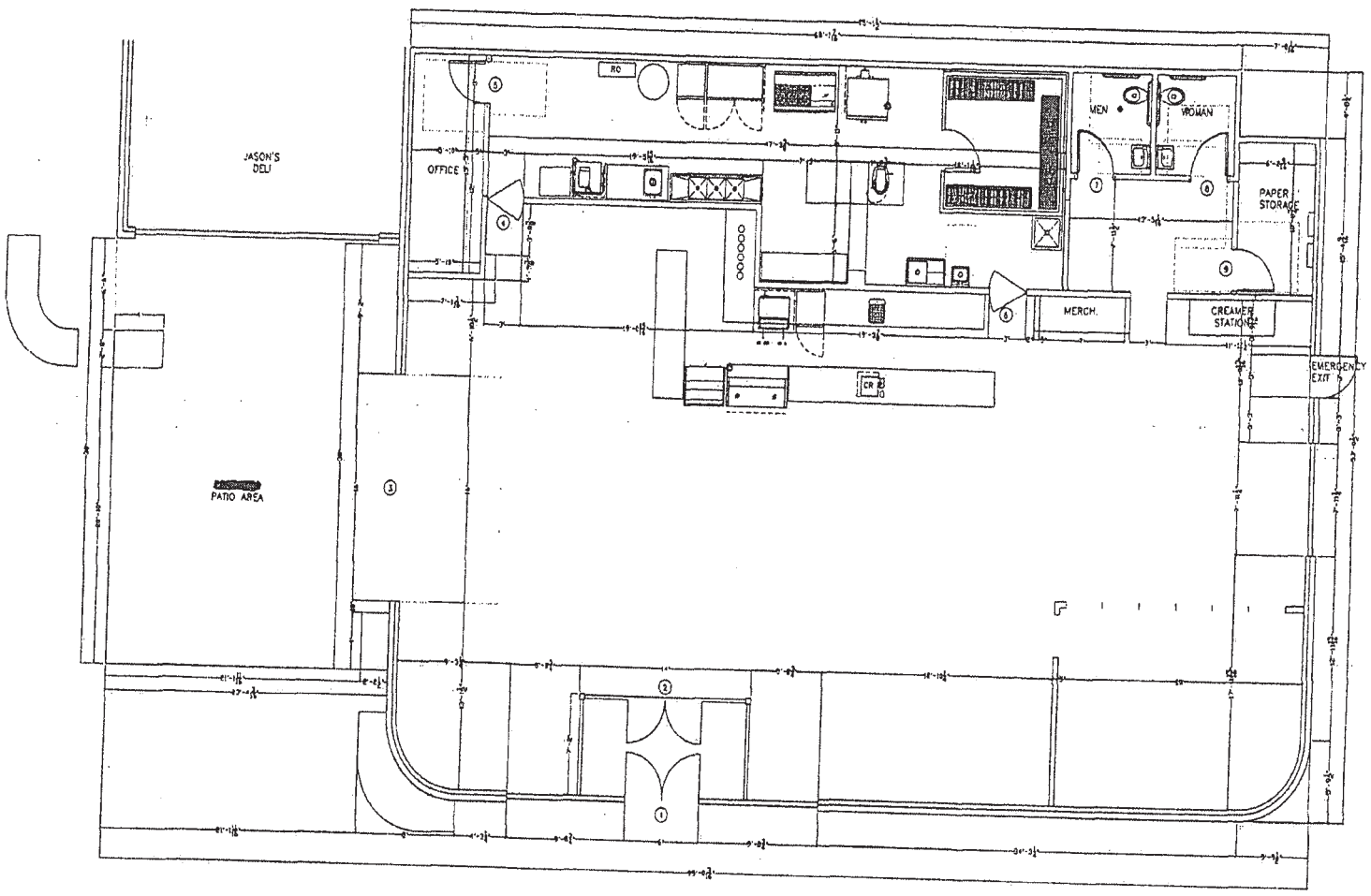

1 FLOOR PLAN
SCALE: 1/4" = 1'-0"

General Notes

No.	Revision/Issue	Date

ROCIO JAQUEZ
9320 W 23RD ST
ODESSA, TEXAS 79763
915.526.3528

BREW STREET
4610 N GARFIELD ST., STE. 1
MIDLAND, TEXAS 79705

Date
04.06.2018
Scale
1/4" = 1'-0"
Sheet
A102

EXHIBIT A

27.7
17.10
13.31

9630

City Council Agenda

APPROVED

Approved for Agenda:
fsalvato
City Manager's Office

MEETING DATE: January 24, 2017

TO: City Council / City Manager

FROM: Kierra Williams, Senior Planner

SUBJECT: **Consider an ordinance on second reading on a request by Alli Bixler for a Specific Use Permit With Term for the sale of all alcoholic beverages, for on-premises consumption, in a restaurant, on a 5,141-square foot portion of Lot 1, Block 8, Polo Park Addition, Section 3, City and County of Midland, Texas. (Generally located southeast of the intersection of N. Garfield Street and Castleford Road. - District 1)**

Purpose:

Consider an ordinance on second reading on a request by Alli Bixler for a Specific Use Permit with Term for the sale of all alcoholic beverages, for on premises consumption, in a restaurant, Brew Street Bakery.

Recommended City Council Action

☒ Approve ☐ Deny ☐ Directional / Informational

Fiscal Impact:

No City funds are required to process this request.

Discussion:

The property is located at 4610 N. Garfield Street in a PD, Planned District for Shopping Center (Ordinance No. 7771). Zoning to the north and east of the restaurant is PD, Planned District for a Shopping Center, and the location of the Colonnade at Polo Park Shopping Center with various establishments such as, Jason's Deli, Kayser CHRISTmas Experience, and The Blue Door. Zoning to the south of the restaurant is 1F-1, One-Family Dwelling District, and the location of Midland Airpark. The zoning to the west is PD, Planned District for a Shopping Center, and the location of Talbots Retail store.

The applicant is requesting an amendment to the current Specific Use Permit with Term, for the sale of all alcoholic beverages, for on-premises consumption, for the Brew Street Bakery restaurant.

The applicant wishes to amend Condition A of the adopted ordinance (Ordinance No. 9573) to include the outdoor patio area in the total square footage of the restaurant. The patio is approximately 580-square feet and has ingress and egress through the restaurant as well as from the parking lot. All other conditions of the ordinance will remain intact.

The current Specific Use Permit with Term, for the sale of all alcoholic beverages, for on-premises consumption, in a restaurant adopted on June 14, 2016, granted the restaurant the following alcohol serviceable hours;

From 10:00 a.m. to 7:00 p.m., Monday through Wednesday
From 10:00 a.m. to 11:00 p.m., Thursday through Saturday

The operating hours for the restaurant are as follows;

6:30 a.m.-9:00 p.m. Monday through Wednesday
6:30 a.m.-11:00 p.m. Thursday through Saturday

There are no schools or churches located within 300-feet (walking distance) of this site.

Establishments within 200-feet of Brew Street Bakery restaurant that have Specific Use Permit for the sale of all alcoholic beverages, for on-premises consumption are the following;

Blue Door

SUP Type: SUP w/Term for the sale of all alcoholic beverages, for on-premises consumption, in a Lounge.

Ordinance No. : #9133, Adopted 4/9/2013

Seviceable Hours: 4:00 p.m. to 12:00 a.m. Midnight, Tuesday through Saturday.

Operating Hours: Closed, Sunday and Monday, 4:00 p.m.-12:00 a.m. (midnight), Tuesday through Thursday, and 4:00 p.m.-1:00 a.m. (the following day), Friday and Saturday

Wine Rack

SUP Type: SUP w/Term for the sale of all alcoholic beverages, for on-premises consumption in a Bar.

Ordinance No.:#9326, Adopted 9/23/2014

Serviceable Hours: 11:00 a.m.-11:00 p.m. Sunday-Saturday

Operating Hours: Closed, Monday; 11:00 a.m.-8:00 p.m., Tuesday-Friday, 11:00 a.m. – 9:30 p.m. Saturday and Sunday

Bill's Bistro

SUP Type: SUP w/Term for the sale of all alcoholic beverages, for on-premises consumption, in a Restaurant

Ordinance No.: #9279, Adopted 5/20/2014

Serviceable Hours: From 11:00 a.m.-11:00 p.m. Sunday-Saturday

Operarting Hours: Closed, Sunday and Monday; 5:00 p.m.-9:00 p.m., Tuesday-Thursday; 5:00 p.m.-10:00 p.m., Friday and Saturday.

Chili's

SUP Type: SUP w/o Term for the sale of all alcoholic beverages, for on-premises consumption, in a Restaurant.

Ordinance No.: #6355, Adopted 1/24/1984

Serviceable Hours: 11:00 a.m.-12:00 a.m. (midnight), Monday-Thursday; 11:00 a.m.- 2:00 a.m., Friday and Saturday; 12:00 p.m. (noon) - 12:00 a.m. (midnight), Sunday

Operating Hours: 11:00 a.m. – 10:00 p.m., Sunday-Thursday; 11:00 a.m.-11:00 p.m., Friday and Saturday

Athenian Restaurant

SUP Type: SUP w/Term for the sale of all alcoholic beverages, for on-premises consumption, in a Restaurant.

Ordinance No.: #9321, Adopted 9/23/2014

Serviceable Hours: 11:00 a.m.-10:00 p.m., Monday-Thursday, 11:00 a.m.-11:00 p.m., Friday and Saturday.

Operating Hours: Closed, Sunday; 11:00 a.m.-10:00 p.m., Monday-Thursday; 11:00 a.m.-11:00 p.m., Friday and Saturday.

Shogun

SUP Type: SUP w/o Term for the sale of all alcoholic beverages, for on-premises consumption, in a Restaurant.

Ordinance No.: #6457, Adopted 9/25/1984

Serviceable Hours: 7:00 a.m. – 12:00 a.m. (midnight), Monday-Saturday, 12:00 p.m. (noon)-12:00 a.m. (midnight)

Operating Hours: 11:00 a.m.-9:30 p.m., Sunday-Thursday; 11:00 a.m.-10:00 p.m., Friday and Saturday.

Churrasce Brazillian steakhouse

SUP Type: SUP w/o Term for the sale of all alcoholic beverages, for on-premises consumption, in a Restaurant.

Ordinance No.: #7158, Adopted 3/10/1992

Serviceable Hours: 11:00 a.m.-12-a.m. (midnight), Monday-Saturday; 12:00 p.m. (noon) 12:00 a.m. (midnight)

Operating Hours: 11:30 a.m.-2:00 p.m. and 5:00 p.m.-10:00 p.m., Monday-Friday; 4:00p.m.-10:00 p.m., Saturday; 12:00 p.m. (noon)-2:30 p.m. and 5:00 p.m.-9:00 p.m., Sunday

Staff recommends approval of a Specific Use Permit with Term for the sale of all alcoholic beverages, for on-premises consumption, in a restaurant, Subject to conditions A-G.

The Planning and Zoning commission approved this request on December 5, 2016.

Engineering and Transportation:

Engineering and Transportation stated they had no objections regarding the request.

Public Safety:

Comments from Fire are as follows:

> Means of egress shall meet the requirements of the IBC-2015 for its use.
>
> Portable fire extinguishers shall be approved.

Code Administration:

Code had no comments regarding the request.

Planning:

Planning finds the request in compliance with the comprehensive plan.

Conditions:

A. That the establishment shall not exceed 5,141 contiguous square feet in area , including the enclosed patio area, as shown in Exhibit "A", which is attached hereto and incorporated herein.

B. That the enclosed patio are as shown in Exhibit "A", which is attached hereto and incorporated herein, shall have an exit only gate.

C. That the occupancy of the establishment shall not exceed the maximum occupancy determined by the Building Code and Fire Code.

D. That the establishment shall meet all requirements of the Fire Department and the Code Administration Division.

E. That the sale and on-premises consumption of alcoholic beverages shall conform to all applicable state and local laws.

F. That the days and hours of alcoholic beverage sales and consumption shall be limited to:

    a. Monday through Wednesday from 10:00 a.m. to 7:00 p.m.
    b. Thursday through Saturday from 10:00 a.m. to 11:00 p.m.

G. That City of Midland Ordinance No. 9573 is hereby repealed.

Letters of Objection:

As of November 30, 2016, staff has received no letters of objection to this request.

Attachments:

Application
Maps
Site Plan (Exhibit A)
Ordinance No. 9573

Case Number: SUP 16.0057

MIDLAND

APPLICATION FOR A SPECIFIC USE PERMIT WITH TERM FOR THE SALE OF ALCOHOLIC BEVERAGES FOR ON-PREMISE CONSUMPTION

I. APPLICATION

Applicant:

ALLI BIXLER/JUST US GIRLS LLC (Name) — 432 230-8844 (Phone)

5205 ELLEN JAYNE WAY 79707 (Address) — (Email)

Property Owner:

~~WOODCREST~~ COLONNADE LP (Name) — 432 638-7163 DENNIS SKAGGS (Phone)

3113 S. UNIVERSITY FT WORTH 76109 (Address) — (Email)

Operator (if different than the Applicant or Property Owner):

NA (Name) — (Phone)

(Address) — (Email)

Street Address: 4610 N GARFIELD #D-1A PATIO AREA

Legal Description:

If Platted: Lot: _____ Block: _____ Subdivision: _____

If Unplatted: *Attach Metes & Bounds Description with Surveyor's Seal

Current Zoning: _____

Reason for Request: We believe our customers would like to sit on the patio and enjoy our bakery items as well as a beer or glass of wine.

Type of Business: BAKERY (Restaurant, Bar, Lounge, Nightclub, etc.)

Proposed Days and Hours of Alcoholic Beverage Sales: Operating Hours for restaurant and patio 6:30 am - 9 pm MONDAY-WEDNESDAY

[Serviceable hours: M-W, 10am-7pm; Th-Sat, 10am-11pm] 6:30 am-11 pm THURSDAY-SATURDAY

Total Square Footage of Business: 4561 Square Footage of Area: 580 (Patio)

Restroom Fixtures: *Men* Toilets/Urinals 1 / _____ Bathroom Sinks 1

Women Toilets 1 Bathroom Sinks 1

FOR OFFICE USE ONLY: Maximum Seating Capacity Per City Code: _____

17.11

13.37

II. FEE & SUBMITTALS

Application Fee ($300.00): $ 300.00

2 FOLDED Copies of Dimensioned Floor Plan: _____
2 FOLDED Copies of Dimensioned Site Plan: _____
Digital Copies of Floor Plan & Site Plan (PDF & JPEG): _____

III. SIGNATURES

Applicant: Alli Bixler Date: 11-8-16

Property Owner: [signature] Date: 11-8-16

If an Agent is authorized by the property owner to file and execute the application on behalf of the property owner, the Agent must complete the affidavit below.

STATE of TEXAS
COUNTY OF MIDLAND

Before me, the undersigned authority, on this day personally appeared ALLI BIXLER who, being by me duly sworn, upon oath says: That (s)he is authorized by WOODCREST COLONNADE LP the owner of the above described property, to fully represent him/her in this application and that (s)he had the legal right, power and authority to sign said owner's name hereto as his/her attorney in fact.

Subscribed and sworn to before me, this _____ day of NOVEMBER, 2016, to certify which witness my hand and seal of office.

_____
NOTARY PUBLIC, MIDLAND COUNTY, TEXAS

FOR OFFICE USE ONLY:
Rec'd By: _____ Date: _____
Assigned: _____
For: _____ On: _____

****Application will not be considered for scheduling until reviewed by a planner.****

ORDINANCE NO. 9573

AN ORDINANCE CHANGING THE ZONING USE CLASSIFICATION OF THE PROPERTY DESCRIBED AS A 4,472-SQUARE FOOT PORTION OF LOT 1, BLOCK 8, POLO PARK ADDITION, SECTION 3, CITY AND COUNTY OF MIDLAND, TEXAS (GENERALLY LOCATED SOUTHEAST OF THE INTERSECTION OF NORTH GARFIELD STREET AND CASTLEFORD ROAD), WHICH IS PRESENTLY ZONED PD, PLANNED DISTRICT FOR A SHOPPING CENTER, BY PERMITTING SAID PROPERTY TO BE USED UNDER A SPECIFIC USE PERMIT WITH TERM FOR THE SALE OF ALL ALCOHOLIC BEVERAGES IN A RESTAURANT FOR ON-PREMISES CONSUMPTION; MAKING SAID PERMIT SUBJECT TO CERTAIN CONDITIONS AND RESTRICTIONS CONTAINED HEREIN; CONTAINING A CUMULATIVE CLAUSE; CONTAINING A SAVINGS AND SEVERABILITY CLAUSE; PROVIDING FOR A MAXIMUM PENALTY OR FINE OF TWO THOUSAND DOLLARS ($2,000.00); AND ORDERING PUBLICATION

WHEREAS, the City Planning and Zoning Commission and the Governing Body of the City of Midland, Texas, in compliance with the City Charter and the State law with reference to the granting of specific use permits under the zoning ordinance regulations and zoning map, have given the requisite notices by United States mail, publication and otherwise; and after holding due hearings affording a full and fair hearing to all of the property owners generally, and particularly to those interested persons situated in the affected area and in the vicinity thereof, the Governing Body of the City of Midland finds that the public convenience will be best served by the granting of a Specific Use Permit With Term, set out hereinafter, on the property described in Section One hereof;

NOW, THEREFORE, BE IT ORDAINED BY THE CITY COUNCIL OF THE CITY OF MIDLAND, TEXAS:

SECTION ONE. That the zoning use classification of the following described property, which is presently zoned PD, Planned District for a Shopping Center, to-wit:

A 4,472-square foot portion of Lot 1, Block 8, Polo Park Addition, Section 3, City and County of Midland, Texas;

is hereby changed to permit said property to be used under a Specific Use Permit With Term

for the sale of all alcoholic beverages for on-premises consumption in a restaurant, together with the uses permitted in the present PD, Planned District for a Shopping Center.

SECTION TWO. That said property shall be subject to the following conditions and restrictions:

A. That the maximum square footage of the restaurant shall be limited to 4,472 contiguous square feet as shown in the floor plan, which is attached hereto as Exhibit "A" and incorporated herein for all purposes.

B. That the occupancy of the restaurant shall not exceed the maximum occupancy determined by the Building Code and Fire Code.

C. That the sale and on-premises consumption of alcoholic beverages shall conform to all applicable state and local laws.

D. That the days and hours of alcoholic beverage sales and consumption shall be limited to the following when not otherwise prohibited by law:

Monday through Wednesday from 10:00 a.m. to 7:00 p.m; and
Thursday through Saturday from 10:00 a.m. to 11:00 p.m.

SECTION THREE. The provisions of this ordinance are to be cumulative of all other ordinances or parts of ordinances governing or regulating the same subject matter as that covered herein; provided, however, that all prior ordinances or parts of ordinances, inconsistent with or in conflict with any of the provisions of this ordinance are hereby expressly repealed to the extent of any such inconsistency or conflict.

SECTION FOUR. If any section, subsection, sentence, clause or phrase of this ordinance is, for any reason, held to be unconstitutional or invalid, such holding shall not affect the validity of the remaining portions of this ordinance. The Council of the City of Midland hereby declares that it would have passed this ordinance and each section, subsection, sentence, clause, or phrase hereof irrespective of the fact that any one or more sections, subsections, sentences, clauses, or phrases be declared unconstitutional or invalid.

SECTION FIVE. The penalty for violation of this ordinance shall be in accordance with the general penalty provisions contained in Section 1-3-1 of the City Code of Midland, Texas, which provides for a fine not exceeding two thousand dollars ($2,000.00).

SECTION SIX. The City Secretary is hereby authorized and directed to publish the

descriptive caption of this ordinance in the manner and for the length of time prescribed by the law as an alternative method of publication.

The above and foregoing ordinance was duly proposed, read in full and adopted on first reading, the 24th day of May, A.D., 2016; and passed to second reading on motion of Council member Lacy, seconded by Council member Love, by the following vote:

Council members voting "AYE": Hotchkiss, Love, Sparks, Morales, Dufford, Lacy, Robnett

Council members voting "NAY": None

The above and foregoing ordinance was read in full and finally adopted by the following vote upon motion of Council member Lacy, seconded by Council member Hotchkiss, on the 14th day of June, A.D., 2016, at a regular meeting of the City Council:

Council members voting "AYE": Hotchkiss, Love, Sparks, Morales, Lacy, Robnett

Council members voting "NAY": None

PASSED AND APPROVED THIS 14th day of June, A.D., 2016.

Jerry F. Morales, Mayor

ATTEST:

Amy M. Turner, City Secretary

APPROVED AS TO CONTENT
AND COMPLETENESS:

Frank Salvato, Assistant City Manager

Charles Harrington, Director of Development Services

APPROVED ONLY AS TO FORM:

John Ohnemiller, City Attorney

17.16
13.42

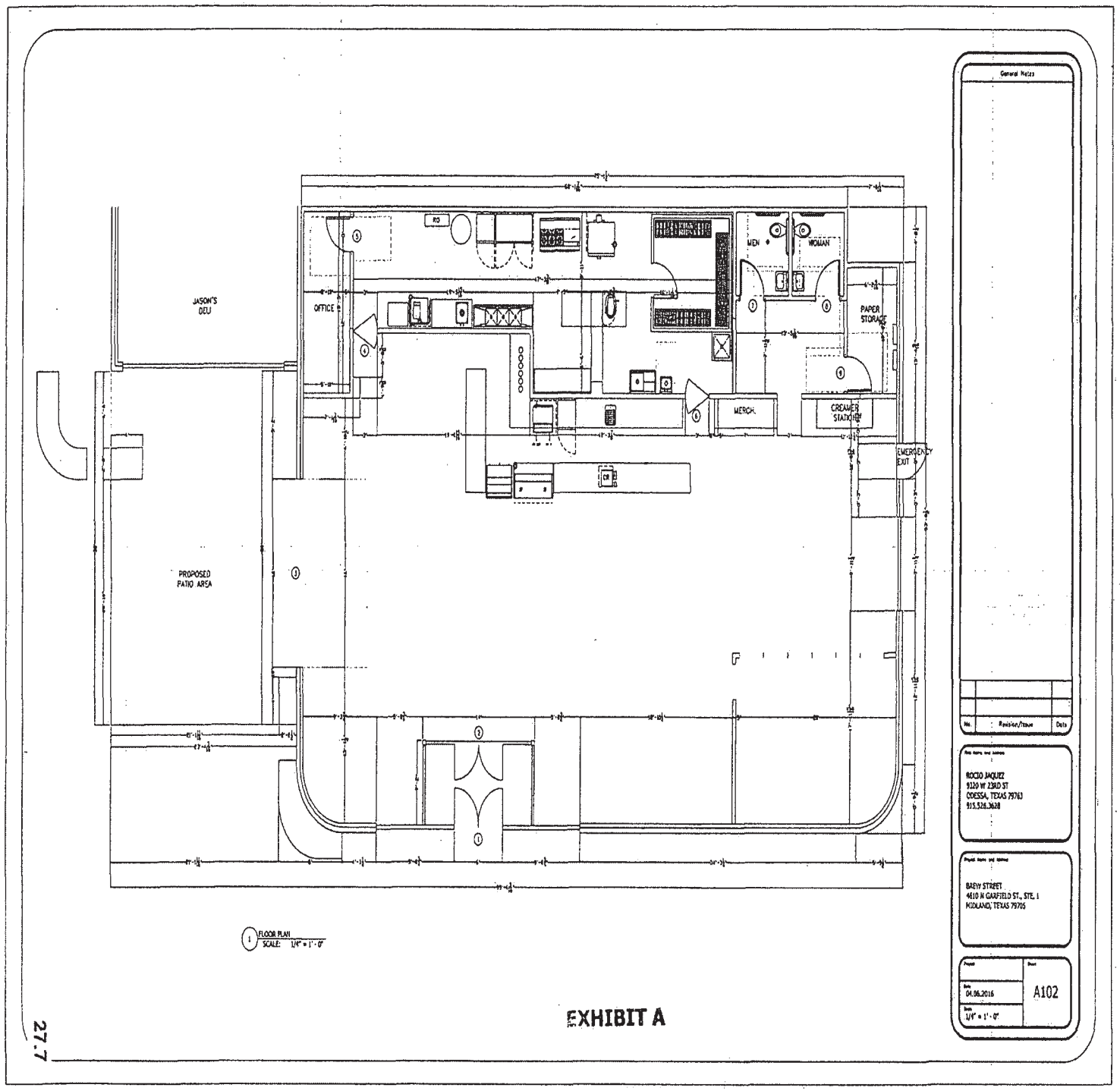

EXHIBIT A

27.17

17.17
13.43

Exhibit "A"

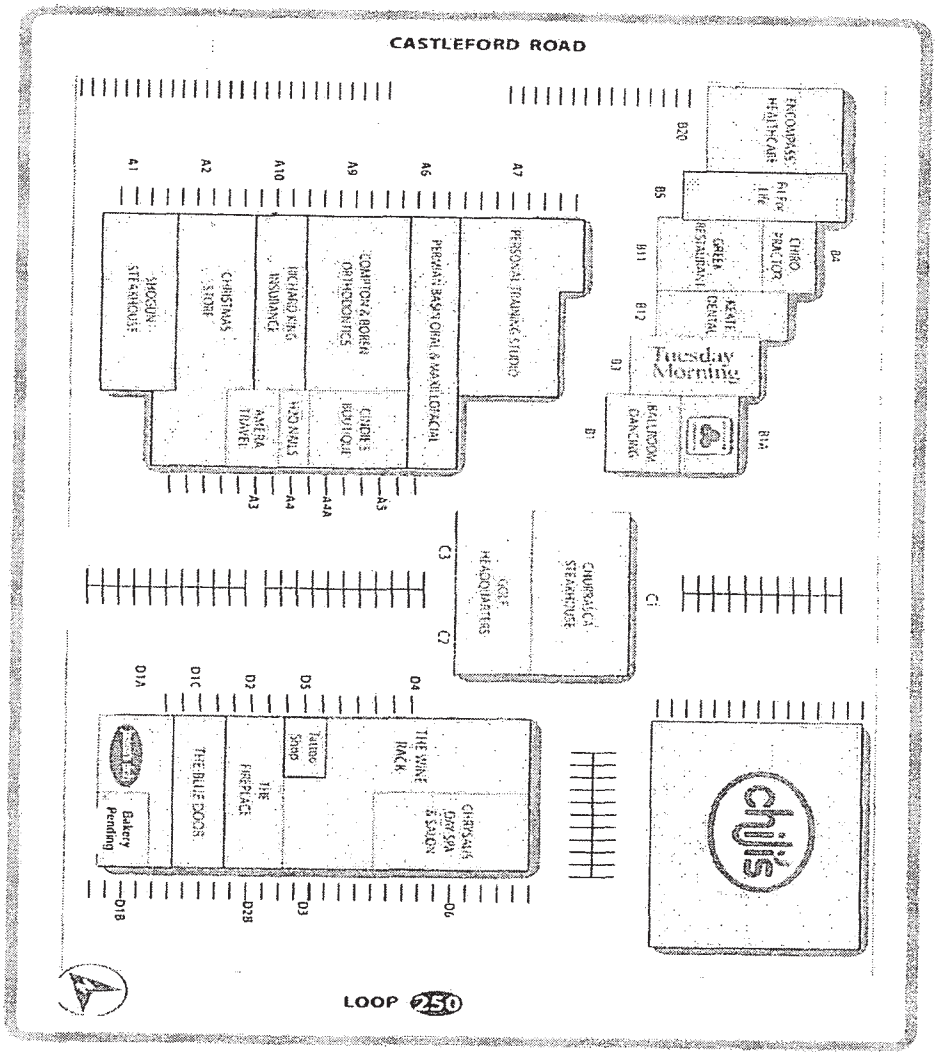

Initials AG JK Initials JM

17.18

13.44

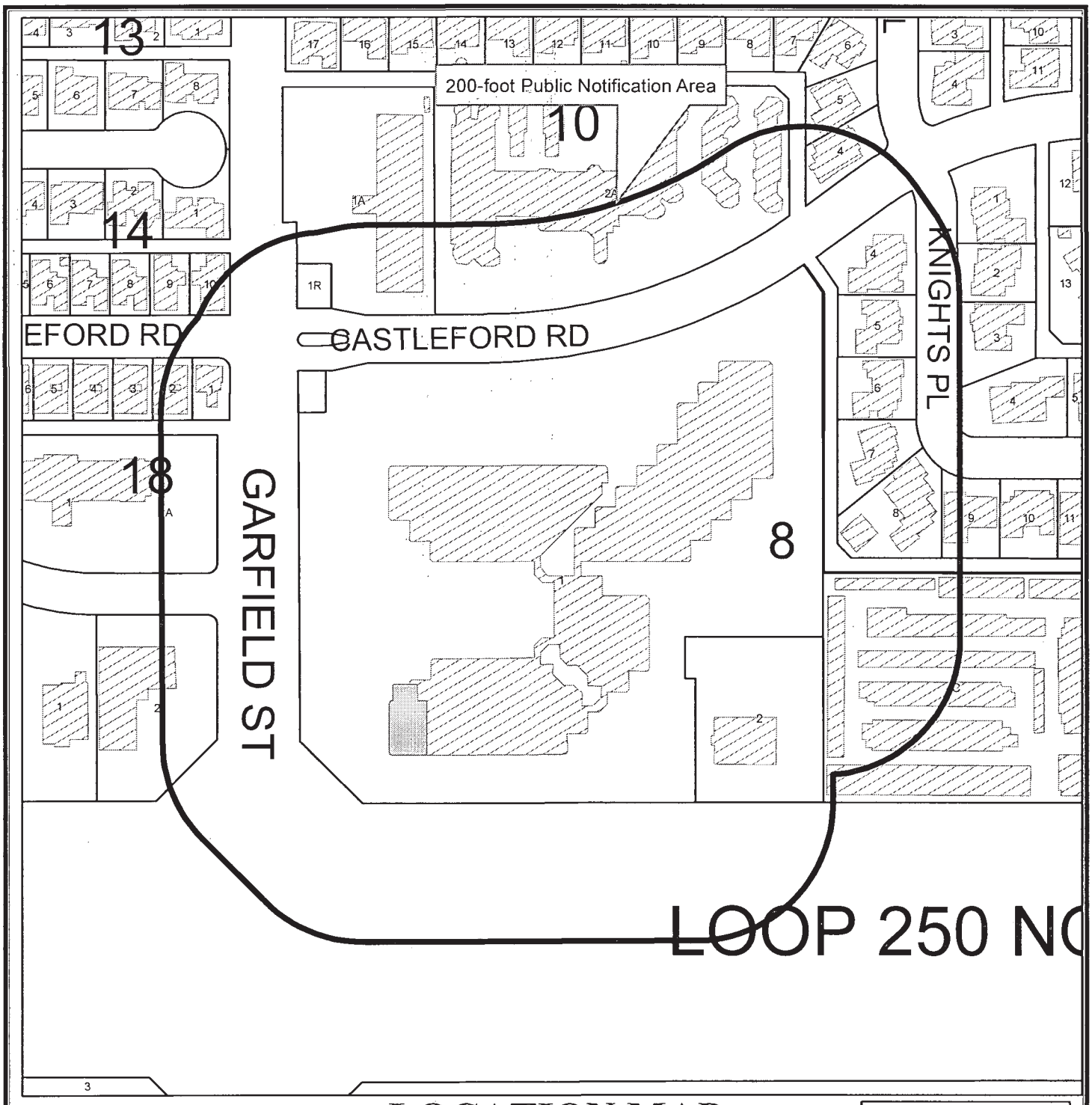

LOCATION MAP

SUP- 16 -0057 **Scale: 1" = 200'**

Consider a request for a Specific Use Permit With Term for the sale of all alcoholic beverages, for on-premises consumption, in a restaurant, on a 5,141-square foot portion of Lot 1, Block 8, Polo Park Addition, Section 3, City and County of Midland, Texas.

Generally located southeast of the intersection of N. Garfield Street and Castleford Road. (Council District 1)

LEGEND

- CITY LIMITS
- PARCEL
- PRIVATE BLDGS

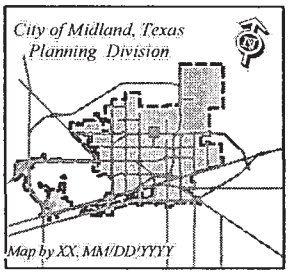

© CITY OF MIDLAND - 2016
THIS DATA IS NOT A SUBSTITUTION FOR A SURVEY PRODUCT, NOR IS IT DESIGNED TO BE USED AS A PRIMARY TOOL IN PERMITTING OR OTHER DECISIONS BASED SOLEY ON THE INFORMATION CONTAINED HEREIN.
THE CITY OF MIDLAND SHALL NOT BE RESPONSIBLE F ANY DECISIONS BASED UPON THE USE OF THIS DAT

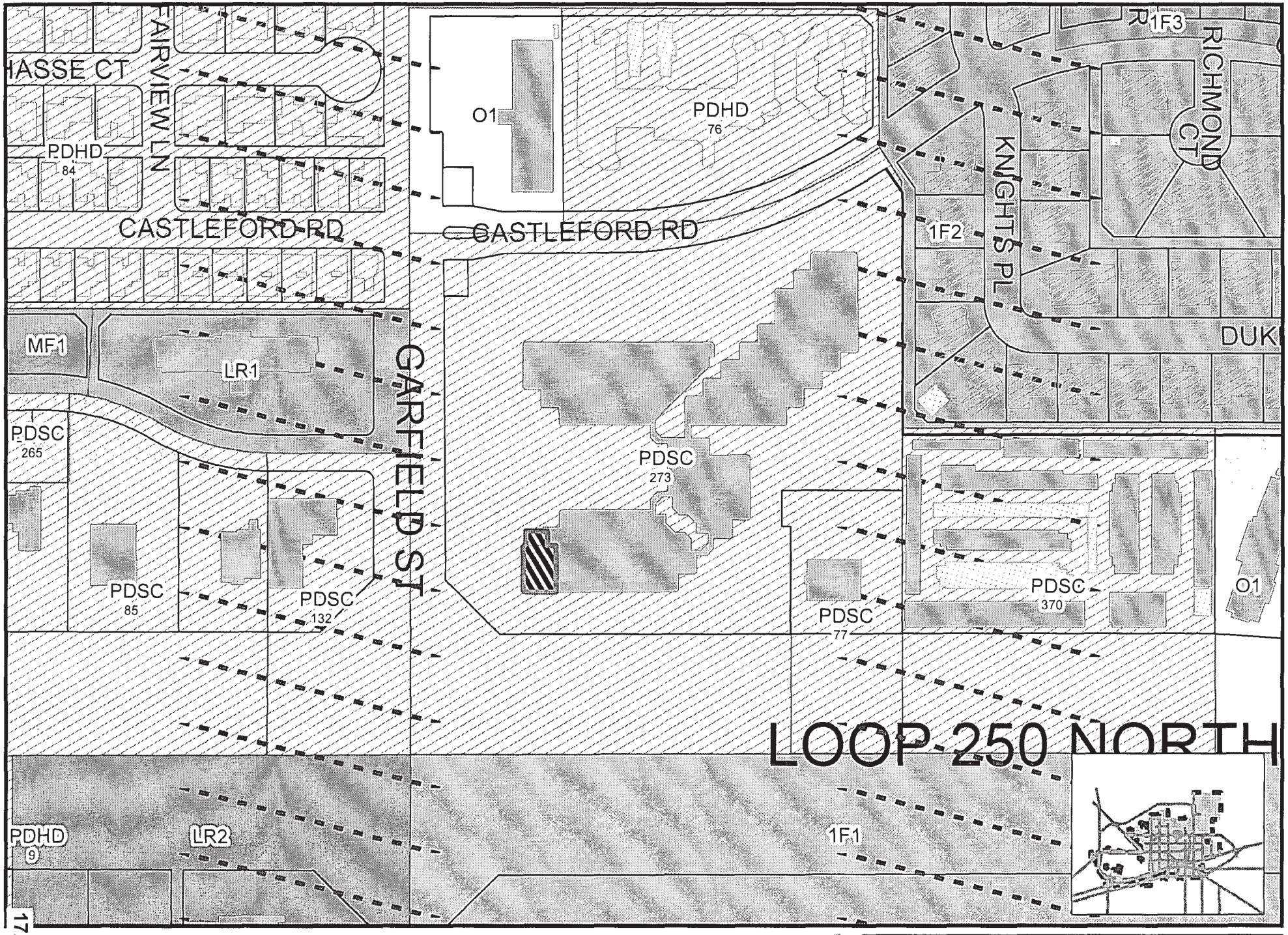

17.20

13.46

ip By KW, 11/22/2016

SUP- 16 - 0057

Scale: 1" = 200'

ZONING MAP

© CITY OF MIDLAND - 2016: THIS DATA IS NOT A SUBSTITUTION FOR A SURVEY PRODUCT, NOR IS IT DESIGNED TO BE USED AS A PRIMARY TOOL IN PERMITTING OR OTHER DECISIONS BASED SOLEY ON THE INFORMATION CONTAINED HEREIN. THE CITY OF MIDLAND SHALL NOT BE RESPONSIBLE FOR ANY DECISIONS BASED UPON THE USE OF THIS DATA.

SNOGUN
A KAYSER CHRISTMAS EXPERIENCE INC
NOW OPEN
A KAYSER CHRISTMAS EXPERIENCE INC
TRAVEL
NAILS & SPA
Candies

17.21

13.47

17.22
13.48

17.23

13.49

17.24
13.50

17.25
13.51

FAIRFIELD
INN & SUITES
Marriott
Ramen & Grill
13.52

Brew St.
BAKERY, COFFEE, & TEA
BAKERY, COFFEE, & TEA
Jason's deli
GOLF HEADQUARTERS

13.53

13.54

13.55

City Council

Approved for Agenda:

MEETING DATE: **April 28, 2020**

TO: **CITY COUNCIL/CITY MANAGER**

FROM: **Eric Myers, Planner**

SUBJECT: **Hold a public hearing and consider an ordinance on a request by Jorge Chavez for a Zone Change from MF-22, Multiple-Family Dwelling District, to SF-3, Single Family Dwelling District, on Lot 14, Block 1, Eastover Addition, City and County of Midland, Texas. (Generally located on the east side of N. Adams Street, approximately 80-feet south of E. Illinois Avenue. Council District 2)**

Recommended Planning and Zoning Commission Action:

☒ **Approve** ☐ **Deny** ☐ **Direction/Informational**

Details of Request:

The applicant, Jorge Chavez, is requesting a Zone Change from MF-22, Multiple-Family Dwelling District to SF-3, Single-Family Dwelling District, on Lot 14, Block 1, Eastover Addition, City and County of Midland, Texas.

Current Zoning:

MF-22, Multiple-Family Dwelling District.

Surrounding Zoning and Land Use:

The properties to the north are zoned SF-3, Single Family Dwelling District, and are currently vacant lots. The properties to the east, south, and west are zoned MF-22, Multiple-Family Dwelling District, and are the locations of residences, vacant land, and Carver Elementary, respectively.

Analysis:

The property is located at 210 N. Adams Street, and is currently vacant. The applicant is proposing to build a home at this location.

Per the previous zoning ordinance, single-family detached dwellings were allowed in this zoning district. As of July 1, 2019, the new zoning ordinance does not allow the use of single-family detached dwellings within MF-22, Multiple-Family Dwelling District.

The planning department has researched the surrounding neighborhood and based on the existing characteristics of the area, the zone change request to allow for a single-family detached dwelling would be appropriate.

The dimensions of the property are approximately 40 feet by 80 feet and would not meet the dimensional regulations of the SF-3, Single Family Dwelling District. However, per the Zoning Ordinance section 4.08.D, “Any existing vacant lot platted prior to the zoning ordinance effective date that was legally conforming shall be deemed a conforming lot.” The property was platted prior to the effective date of the zoning ordinance; therefore, the lot would be suitable for the development of a home. The appropriate setbacks and maximum height must also comply with the residential zoning district dimensional regulations for the SF-3, Single Family Dwelling District.

This proposed zone change has been circulated to and reviewed by respective City departments and their comments, conditions, and requirements are as follows:

Fire: (Approved)

No objections.

Building: (Approved)

No issues. All future structures must adhere to the 2018 International Building Codes, the 2015 International Energy Code, the 2017 NEC requirements, the 2015 International Fire Codes, local city ordinances, zoning requirements, established setbacks, and floodplain requirements if necessary.

Engineering: (Approved)

No objection to zone change.

Property lies entirely within Special Flood Hazard Area Zone AE. Finish floor will be required to be build 1 foot above the base flood elevation.

Site drainage, utilities, driveway access, and traffic circulation may be adjusted during construction drawing review as necessary to receive building permit approval from Engineering and Traffic Operations.

Code: (Approved)

No Oil or Gas wells identified within 500 ft. permitted well radius or in the 135 ft. non-permitted well radius of location on plat.

Transportation: (Approved)

Site drainage, utilities, driveway access, and traffic circulation may be adjusted during construction drawing review as necessary to receive building permit approval from Engineering and Traffic Operations.
No objection to zone change.

Planning:

Per the Future Land Use map, this location is designated as Urban-Residential Low. Potential zoning or this area includes Single-Family Dwelling Districts; therefore, this zone change complies with the Future Land Use plan. The surrounding lots consist of vacant lots and residences. This zone change will follow the existing characteristics of the surrounding neighborhood and provide additional housing for residents of the City of Midland.

The Planning and Zoning Commission recommended approval of this request at the April 6, 2020 meeting.

Staff recommends approval of the zone change from MF-22, Multiple-Family Dwelling District to SF-3, Single-Family Dwelling District subject to condition A.

Conditions:

A. **That the use and development of this property shall conform to the regulations of the SF-3, Single-Family Dwelling District.**

Letters of Objection:

Staff has not received any letters of objection as of April 22, 2020.

Attachments:

Application
Maps
Warrantee Deed

ORDINANCE NO. _____

AN ORDINANCE AMENDING THE ZONING DISTRICT MAP OF THE CITY OF MIDLAND TO REZONE LOT 14, BLOCK 1, EASTOVER ADDITION, CITY AND COUNTY OF MIDLAND, TEXAS, FROM MF-22, MULTIPLE-FAMILY DWELLING DISTRICT TO SF-3, SINGLE-FAMILY DWELLING DISTRICT (GENERALLY LOCATED ON THE EAST SIDE OF NORTH ADAMS STREET, APPROXIMATELY 80 FEET SOUTH OF EAST ILLINOIS AVENUE); CONTAINING A CUMULATIVE CLAUSE; CONTAINING A SAVINGS AND SEVERABILITY CLAUSE; PROVIDING FOR A MAXIMUM PENALTY OR FINE OF TWO THOUSAND DOLLARS ($2,000.00); AND ORDERING PUBLICATION

WHEREAS, the City Planning and Zoning Commission and the Governing Body of the City of Midland, in compliance with the City Charter, the City Code, and State law, have given the requisite notices by United States mail, publication and otherwise; and after a full and fair hearing to all of the property owners generally and particularly to those interested persons situated in the affected area and in the vicinity thereof, the Governing Body finds that the public health, safety and general welfare will be best served by rezoning Lot 14, Block 1, Eastover Addition, City and County of Midland, Texas (the "Property") to SF-3, Single-Family Dwelling District, as set out hereinafter;

NOW, THEREFORE, BE IT ORDAINED BY THE CITY COUNCIL OF THE CITY OF MIDLAND, TEXAS:

SECTION ONE. That the Zoning District Map of the City of Midland, Texas, is hereby amended to rezone the Property from MF-22, Multiple-Family Dwelling District to SF-3, Single-Family Dwelling District.

SECTION TWO. That the definitions given in the zoning regulations contained in the City Code of the City of Midland, Texas, shall be applicable to such of those terms as are used herein.

SECTION THREE. The provisions of this ordinance are to be cumulative of all other ordinances or parts of ordinances governing or regulating the same subject matter as that covered herein; provided, however, that all prior ordinances or parts of ordinances

inconsistent with or in conflict with any of the provisions of this ordinance are hereby expressly repealed to the extent of any such inconsistency or conflict.

SECTION FOUR. If any section, subsection, sentence, clause or phrase of this ordinance is, for any reason, held to be unconstitutional or invalid, such holding shall not affect the validity of the remaining portions of this ordinance. The Council of the City of Midland hereby declares that it would have passed this ordinance and each section, subsection, sentence, clause, or phrase hereof irrespective of the fact that any one or more sections, subsections, sentences, clauses, or phrases be declared unconstitutional or invalid.

SECTION FIVE. The penalty for violation of this ordinance shall be in accordance with the general penalty provisions contained in Section 1-3-1 of the City Code of Midland, Texas, which provides for a fine not exceeding two thousand dollars ($2,000.00).

SECTION SIX. The City Secretary is hereby authorized and directed to publish the descriptive caption of this ordinance in the manner and for the length of time prescribed by the law as an alternative method of publication.

The above and foregoing ordinance was duly proposed, read in full and adopted on first reading, the _____ day of _____, A.D., 2020; and passed to second reading on motion of Council member _____, seconded by Council member _____, by the following vote:

Council members voting "AYE":

Council members voting "NAY":

The above and foregoing ordinance was read in full and finally adopted by the following vote upon motion of Council member _____, seconded by Council member _____, on the _____ day of _____, A.D., 2020, at a regular meeting of the City Council:

Council members voting "AYE":

Council members voting "NAY":

PASSED AND APPROVED THIS _____ day of _____, A.D., 2020.

_____
Patrick N. Payton, Mayor

ATTEST:

_____
Amy M. Turner, City Secretary

APPROVED AS TO CONTENT
AND COMPLETENESS:

_____
Robert Patrick, Assistant City Manager

_____
Charles Harrington, Director of Development Services

APPROVED ONLY AS TO FORM:

_____
John Ohnemiller, City Attorney

MIDLAND
Planning Division

Zone Change/Planned District Amendment/Site Plan Approval

Project Number: _____

Case Number: Z-20-0175

Applicant *(if acting as Agent, see affidavit on page 2)* Printed Name: Jorge Chavez		Phone (432) 889-7005 Email ferre_Chavez@ymail.com	
Address 1611 N. Camesa Rd.	City Midland	State TX	Zip 79701

Property Owner Printed Name: Jorge Chavez		Phone (432) 889-7005 Email ferre_Chavez@ymail.com	
Address 1611 N. Camesa Rd.	City Midland	State TX	Zip 79701

Representative *(if different from Applicant or Property Owner)* Firm: _____ Printed Name:		Phone ( ) Email	
Address	City	State	Zip

Street Address: 210 N. Adams

Legal Description
Lot: 14 Block: 1 Subdivision: East Over Addition

Current Zoning: MF-22

Proposed Zone: SF-3
(List by tracts if more than one district is requested)

Reason for Zone Change Request: ~~For~~ TO build a house on the property.

Present Use of Property: Vacant

Proposed Use of Property: For a home.

How would this zone change affect the public health, safety and welfare? N/A

Describe how conditions affecting the property have changed since present zoning designation: N/A

Submittal and Fees
Items to be submitted with this application form:

- Application Fee – Payable to the 'City of Midland'
- Dimensioned Site Plan
- Digital Copies of Site Plan (PDF/JPEG)

RECEIVED
MAR 11 2020
BY: DV

Signature *(by property owner only – authorized agent must sign affidavit below)*	
Applicant (signature): Jorge Chavez	Date: 02-12-2020
Applicant (printed): Jorge Chavez	
Property Owner (signature):	Date:
Property Owner (printed) :	

The Zone Change/Planned District Amendment/Site Plan Approval shall be considered officially received in the Planning office only when it has been submitted in full compliance with the provisions of Section 212 of the Texas Local Government Code and the Zoning Code of Ordinances of the City of Midland and when such required items for the application are also received.

All materials, including exhibits, submitted in support of an application, or displayed during a public hearing, shall remain the property of the City of Midland.

STATE OF TEXAS
COUNTY OF MIDLAND

Before me, the undersigned authority, on this day personally appear_____who, being by me duly sworn, upon oath says: That (s)he is the owner of _____or authorized by_____, the owner of the above described property, to fully represent him/her in this application and that (s)he had the legal right, power and authority to sign said owner's name hereto as his/her attorney in fact.

_____
Authorized Agent (*signature*)

Subscribed and sworn to before me, this_____day of_____, 20____, to certify which witness my hand and seal of office.

_____
NOTARY PUBLIC, MIDLAND COUNTY, TEXAS

FOR OFFICE USE ONLY

☐ Property Owner Authorization will provide deed ☑ Dimensioned Site Plan

☐ Application Fee ☐ Plans in Digital Format (PDF/JPEG)

Check # waived

Received By: Date: 2/12/2020

RECEIVED
MAR 11 2020
BY: DR

****Application will not be considered for scheduling until reviewed by a planner.****

Midland County
Alison Haley
Midland County
Clerk

RECEIVED
MAR 11 2020
BY: .....

Instrument Number: 5093

eRecording - Real Property

Recorded On: February 19, 2020 02:38 PM

Number of Pages: 2

" Examined and Charged as Follows: "

Total Recording: $26.00

********** THIS PAGE IS PART OF THE INSTRUMENT **********
Any provision herein which restricts the Sale, Rental or use of the described REAL PROPERTY because of color or race is invalid and unenforceable under federal law.

File Information:

Document Number:	5093
Receipt Number:	20200219000153
Recorded Date/Time:	February 19, 2020 02:38 PM
User:	Araceli R
Station:	cc10299

Record and Return To:
Corporation Service Company

COUNTY COURT * MIDLAND COUNTY, TEXAS *

STATE OF TEXAS
COUNTY OF MIDLAND

I hereby certify that this Instrument was FILED **In the File Number sequence on the date/time printed hereon, and was duly** RECORDED **in the Official Records of Midland County, Texas.**

Alison Haley
Midland County Clerk
Midland County, TX

Alison Haley

NOTICE OF CONFIDENTIALITY RIGHTS: IF YOU ARE A NATURAL PERSON, YOU MAY REMOVE OR STRIKE ANY OF THE FOLLOWING INFORMATION FROM ANY INSTRUMENT THAT TRANSFERS AN INTEREST IN REAL PROPERTY BEFORE IT IS FILED FOR RECORD IN THE PUBLIC RECORDS: YOUR SOCIAL SECURITY OR DRIVERS LICENSE NUMBER.

WARRANTY DEED

THE STATE OF TEXAS §
§ **KNOW ALL MEN BY THESE PRESENTS:**
COUNTY OF MIDLAND §

That **JULIO GUERRERO AND FELIS GUERRERO** whether one or more hereinafter referred to as "Grantor") for and in consideration of the sum of TEN AND NO/100 DOLLARS ($10.00), and other valuable consideration, to Grantor cash in hand paid, the receipt of which is hereby acknowledged, has GRANTED, SOLD and CONVEYED, and by these presents does GRANT, SELL and CONVEY unto **JORGE CHAVEZ DBA JC CHAVEZ CONSTRUCTION** whether one or more, hereinafter referred to as "Grantee"), whose mailing address **1611 N. LAMESA RD., MIDLAND, TX 79701** all that certain lot, tract or parcel of land situated in **MIDLAND** County, Texas, and described as follows, to wit:

Lot Fourteen (14), Block One (1), Eastover 2nd Addition, an addition to the City of Midland, Midland County, Texas according to the map or plat thereof of record in Volume 71, Page 494, Deed Records, Midland County, Texas.

SAVE AND EXCEPT all oil, gas and other minerals in, on and under said land as reserved by prior grantors; and SUBJECT TO all oil and gas leases, easements, rights-of-way, and covenants and restrictions of record in the Office of the County Clerk of **MIDLAND** County, Texas.

STC-132419

TO HAVE AND TO HOLD the above described premises, together with all and singular the rights and appurtenances thereto in anywise belonging unto the Grantee, Grantee's heirs, executors, administrators, successors and assigns forever, and Grantor does hereby bind Grantor, Grantor's heirs, executors, administrators, successors and assigns, to Warrant and Forever Defend, all and singular the said premises unto the said Grantee, Grantee's heirs, executors, administrators, successors and assigns, against every person whomsoever lawfully claiming, or to claim the same, or any part thereof.

EFFECTIVE AS OF 12th DAY OF February, 2020

JULIO GUERRERO

FELIS GUERRERO

THE STATE OF **TEXAS** §
§
COUNTY OF **MIDLAND** §

This instrument was acknowledged before me this 12th day of February, 2020 by **JULIO GUERRERO AND FELIS GUERRERO.**

(SEAL)

IRMA V QUIROZ
NOTARY PUBLIC
ID# 10659398
State of Texas
Comm. Exp. 10-09-2020

NOTARY PUBLIC IN AND FOR
THE STATE OF TEXAS

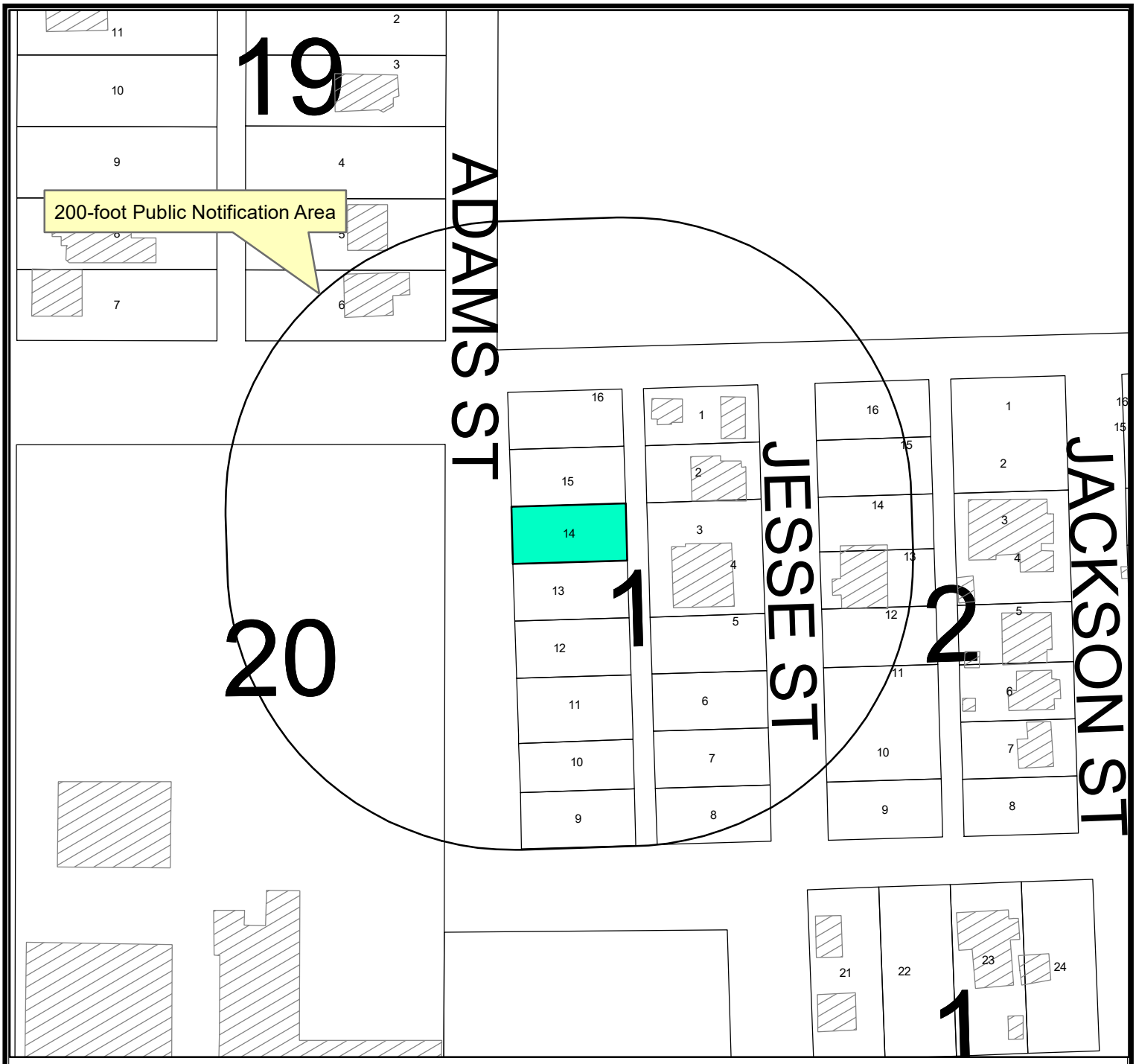

LOCATION MAP

Z-20-0175 **Scale: 1" = 100'**

Consider a request by Jorge Chavez, for a Zone Change from MF-22, Multiple-Family Dwelling District, to SF-3, Single Family Dwelling, on Lot 14, Block 1, Eastover Addition, City and County of Midland, Texas. Generally located on the east side of N. Adams Street, approximately 80-feet south of E. Illinois Avenue. (Council District 2)

LEGEND

- CITY LIMITS
- PARCEL
- PRIVATE BLDGS

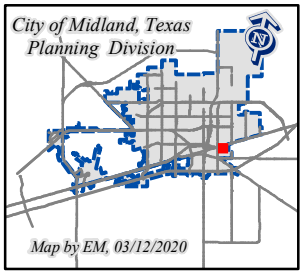

©THE CITY OF MIDLAND - 2020
THIS DATA IS NOT A SUBSTITUTION FOR A SURVEY PRODUCT, NOR IS IT DESIGNED TO BE USED AS A PRIMARY TOOL IN PERMITTING OR OTHER DECISIONS BASED SOLELY ON THE INFORMATION CONTAINED HEREIN.
THE CITY OF MIDLAND SHALL NOT BE RESPONSIBLE I ANY DECISIONS BASED UPON THE USE OF THIS DAT

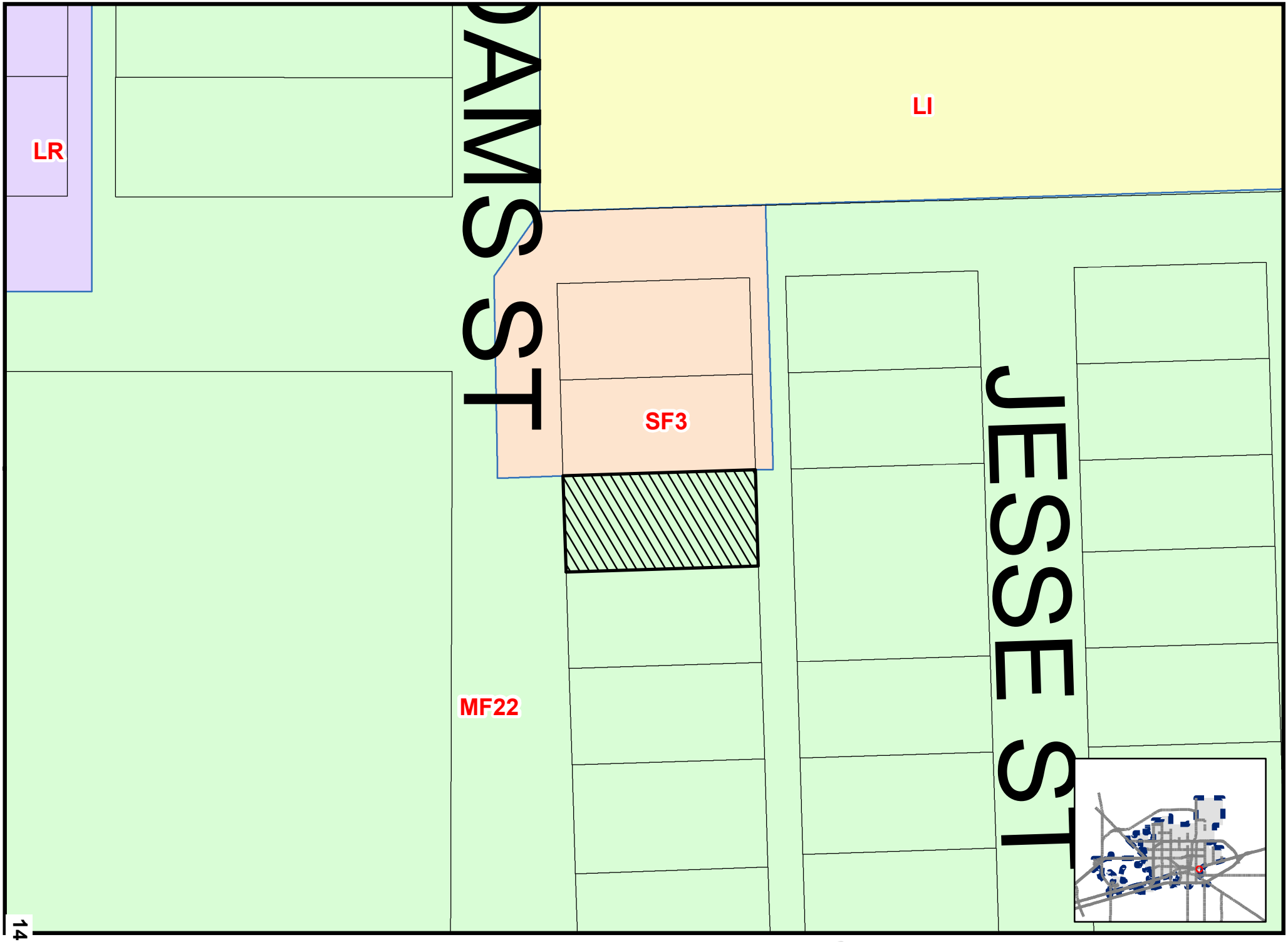

14.12

ap By EM, 3/12/2020

Z-20-0175

Scale: 1" = 50'

ZONING MAP

© **THE CITY OF MIDLAND - 2020:** THIS DATA IS NOT A SUBSTITUTION FOR A SURVEY PRODUCT, NOR IS IT DESIGNED TO BE USED AS A PRIMARY TOOL IN PERMITTING OR OTHER DECISIONS BASED SOLELY ON THE INFORMATION CONTAINED HEREIN.THE CITY OF MIDLAND SHALL NOT BE RESPONSIBLE FOR ANY DECISIONS BASED UPON THE USE OF THIS DATA.

14.13

14.14

14.15

14.16

City Council Agenda

Approved for Agenda:
rwpatrick
City Manager's Office

MEETING DATE: 4/28/2020

TO: City Council / City Manager

FROM: Joseph Marynak, Planner

SUBJECT: Hold a public hearing and consider an ordinance on a request by Garret Haley for a Specific Use Designation with Term for the sale of all alcoholic beverages for on-premises consumption, in a restaurant, on a 6,166 square foot portion of Lot 2A, Block 1A, Midkiff Plaza Addition, Section 8, City and County of Midland, Texas. (Generally located on the south side of W. Loop 250 N., approximately 1,036-feet east of N. Midkiff Road. Council District 1)

Purpose:

The applicant, Garret Haley, is requesting a Specific Use Designation with Term for the sale of all alcoholic beverages, for on premises consumption, in a restaurant at 3001 W. Loop 250 North, Building D.

Recommended City Council Action

☒ Approve ☐ Deny ☐ Directional / Informational

Fiscal Impact:

This proposal does not have a significant financial impact to the city.

Discussion:

Current Zoning:

PD, Planned District for a Shopping Center. (Ordinance 6398)

Discussion

The properties to the north and west are zoned as RR, Regional Retail District, and are the location of shopping centers. The properties to the south and east are zoned PD, Planned District for a Shopping Center, and are the location of shopping centers

Analysis:

The property is located in a PD, Planned District for a Shopping Center, governed by Ordinance 6398, which has an underlying zoning of RR, Regional Retail District. This zoning district permits the sale and on premises consumption of alcoholic beverages in a restaurant, with the approval of a Specific Use Designation with Term.

The site is located at 3001 W. Loop 250 N., Building D, and does not currently have a Specific Use Designation for alcoholic beverages. The serviceable area will have a maximum indoor floor area of 5,101 square feet with an additional 1,065 square feet of patio floor space. The site currently has adequate parking and restroom facilities. The applicant is requesting alcohol service hours as the following:

Monday through Saturday, 11:00 a.m. to 10:00 p.m.

The proposed hours of operation are the same as stated above.

Per Midland City Code 5.4.4. –Prohibited place of business

The sale of any alcoholic beverage is hereby prohibited by any person, where the place of business of any such dealer is within 300 feet of any church, public school, public school ground, athletic stadium used by any public school or public hospital, the measurements to be along the property lines of the street fronts and from front door to front door and in a direct line across intersections where they occur.

There are no churches, private schools, public schools, public school grounds, athletic stadium, public hospital within 300 feet measurement along the property lines of the street fronts, and from the front door in a direct line across intersection where they occur within this site.

This project has been circulated to all City departments for review. Below are the department comments.

Fire: (Approved)

No objections.

Engineering: (Approved)

No objection.

Transportation: (Approved)

No objection.

Building Code: (Approved)

The SUD for Blue Sky Burgers is acceptable provided that the property must adhere to the current maximum occupant load of 182 patrons. Occupancy loads must be posted in accordance with section 1004.3 of the 2015 International Fire Code.

Planning:

The request is in compliance with the Tall City Tomorrow Comprehensive Plan, Chapter 6-Character Plan Goal 4, “Encourage the development of places where Midland residents can gather and socialize to build connections.” (Tall City Tomorrow page 137) Blue Sky of Texas will create a vibrant atmosphere where residents can feel relaxed and enjoy burgers along with beer and wine.

This request was recommended for approval at the April 6, 2020 Planning and Zoning Commission Meeting.

This request meets all requirements; therefore, staff recommends approval of this request for a Specific Use Designation with Term for the sale of all alcoholic beverages, for on-premises consumption, in a restaurant, subject to Condition A through G.

Conditions:

A. That the serviceable area of the restaurant shall be limited to approximately 6,166 square feet as shown in Exhibit “A”, which is attached hereto and incorporated herein for all purposes.

B. That the occupancy of the establishment shall not exceed the maximum occupancy determined by the Building Code and Fire Code.

C. That the establishment shall meet all requirements of the Fire Department and Code Administration.

D. That the sale and on-premises consumption of alcoholic beverages shall conform to applicable state and local laws.

E. That the days and hours of alcoholic beverages sales and consumption shall be limited to:

Monday through Saturday, from 11:00 a.m. to 10:00 p.m.

F. That the applicant shall obtain a Certificate of Occupancy prior to the commencement of the sale of alcoholic beverages for on premises consumption to ensure that the conditions of this permit are satisfied.

G. That in accordance with Section 9.07.E.3 of the zoning ordinance, the restaurant shall be in operation within 120 days from the final adoption date of this ordinance.

Letters of Objection: As of April 22, 2020, staff has not received any letters of objection.

Attachments:
Floor Plan (Exhibit A)
Warranty Deed
Ordinance 6398
Application
Maps

ORDINANCE NO. _____

AN ORDINANCE AMENDING THE ZONING DISTRICT MAP OF THE CITY OF MIDLAND TO GRANT A SPECIFIC USE DESIGNATION WITH TERM FOR A 6,166-SQUARE FOOT PORTION OF LOT 2A, BLOCK 1A, MIDKIFF PLAZA ADDITION, SECTION 8, CITY AND COUNTY OF MIDLAND, TEXAS (GENERALLY LOCATED ON THE SOUTH SIDE OF WEST 250 LOOP NORTH, APPROXIMATELY 1,036 FEET EAST OF NORTH MIDKIFF ROAD), WHICH IS PRESENTLY ZONED PD, PLANNED DEVELOPMENT DISTRICT FOR A SHOPPING CENTER, ALLOWING SAID PROPERTY TO BE USED FOR THE SALE OF ALL ALCOHOLIC BEVERAGES IN A RESTAURANT FOR ON-PREMISES CONSUMPTION; MAKING SAID DESIGNATION SUBJECT TO CERTAIN CONDITIONS AND RESTRICTIONS CONTAINED HEREIN; CONTAINING A CUMULATIVE CLAUSE; CONTAINING A SAVINGS AND SEVERABILITY CLAUSE; PROVIDING FOR A MAXIMUM PENALTY OR FINE OF TWO THOUSAND DOLLARS ($2,000.00); AND ORDERING PUBLICATION

WHEREAS, the City Planning and Zoning Commission and the Governing Body of the City of Midland, Texas, in compliance with the City Charter, the City Code, and State law, have given the requisite notices by United States mail, publication and otherwise; and after holding due hearings affording a full and fair hearing to all of the property owners generally, and particularly to those interested persons situated in the affected area and in the vicinity thereof, the Governing Body of the City of Midland finds that the public convenience will be best served by granting a Specific Use Designation With Term for a 6,166-square foot portion of Lot 2A, Block 1A, Midkiff Plaza Addition, Section 8, City and County of Midland, Texas (the "Property") as set out hereinafter;

NOW, THEREFORE, BE IT ORDAINED BY THE CITY COUNCIL OF THE CITY OF MIDLAND, TEXAS:

SECTION ONE. That the Zoning District Map of the City of Midland, Texas, is hereby amended to grant the Property a Specific Use Designation With Term for the sale of all alcoholic beverages for on-premises consumption in a restaurant (the "Establishment"), together with the uses permitted in the present PD, Planned Development District for a

Shopping Center.

SECTION TWO. That the Property shall be subject to the following conditions and restrictions:

A. That the serviceable area of the Establishment shall be limited to approximately 6,166 contiguous square feet as shown in Exhibit "A", which is attached hereto and incorporated herein for all purposes.

B. That the occupancy of the Establishment shall not exceed the maximum occupancy determined by the Building Code and Fire Code.

C. That the sale and on-premises consumption of alcoholic beverages shall conform to all applicable state and local laws.

D. That the days and hours of alcoholic beverage sales and consumption shall be limited to Monday through Saturday from 11:00 a.m. to 10:00 p.m.

E. That the Establishment shall meet the requirements of the Fire Department and the Code Administration Division.

F. That the applicant shall obtain a Certificate of Occupancy for the Establishment prior to the commencement of the sale of alcoholic beverages for on-premises consumption to ensure that the conditions of this Specific Use Designation With Term are satisfied.

G. That in accordance with Section 11-1-9.07.E.3 of the City Code, the Establishment shall be in operation within 120 days from the final adoption date of this ordinance.

SECTION THREE. The provisions of this ordinance are to be cumulative of all other ordinances or parts of ordinances governing or regulating the same subject matter as that covered herein; provided, however, that all prior ordinances or parts of ordinances, inconsistent with or in conflict with any of the provisions of this ordinance are hereby expressly repealed to the extent of any such inconsistency or conflict.

SECTION FOUR. If any section, subsection, sentence, clause or phrase of this ordinance is, for any reason, held to be unconstitutional or invalid, such holding shall not affect the validity of the remaining portions of this ordinance. The Council of the City of Midland hereby declares that it would have passed this ordinance and each section, subsection, sentence, clause, or phrase hereof irrespective of the fact that any one or more sections, subsections, sentences, clauses, or phrases be declared unconstitutional or invalid.

SECTION FIVE. The penalty for violation of this ordinance shall be in accordance with the general penalty provisions contained in Section 1-3-1 of the City Code of Midland, Texas, which provides for a fine not exceeding two thousand dollars ($2,000.00).

SECTION SIX. The City Secretary is hereby authorized and directed to publish the descriptive caption of this ordinance in the manner and for the length of time prescribed by the law as an alternative method of publication.

The above and foregoing ordinance was duly proposed, read in full and adopted on first reading, the _____ day of _____, A.D., 2020; and passed to second reading on motion of Council member _____, seconded by Council member _____, by the following vote:

Council members voting "AYE":

Council members voting "NAY":

The above and foregoing ordinance was read in full and finally adopted by the following vote upon motion of Council member _____, seconded by Council member _____, on the _____ day of _____, A.D., 2020, at a regular meeting of the City Council:

Council members voting "AYE":

Council members voting "NAY":

PASSED AND APPROVED THIS _____ day of _____, A.D., 2020.

_____
Patrick N. Payton, Mayor

ATTEST:

_____
Amy M. Turner, City Secretary

APPROVED AS TO CONTENT
AND COMPLETENESS:

_____
Robert Patrick, Assistant City Manager

_____
Charles Harrington, Director of Development Services

APPROVED ONLY AS TO FORM:

_____
John Ohnemiller, City Attorney

EXHIBIT "A"

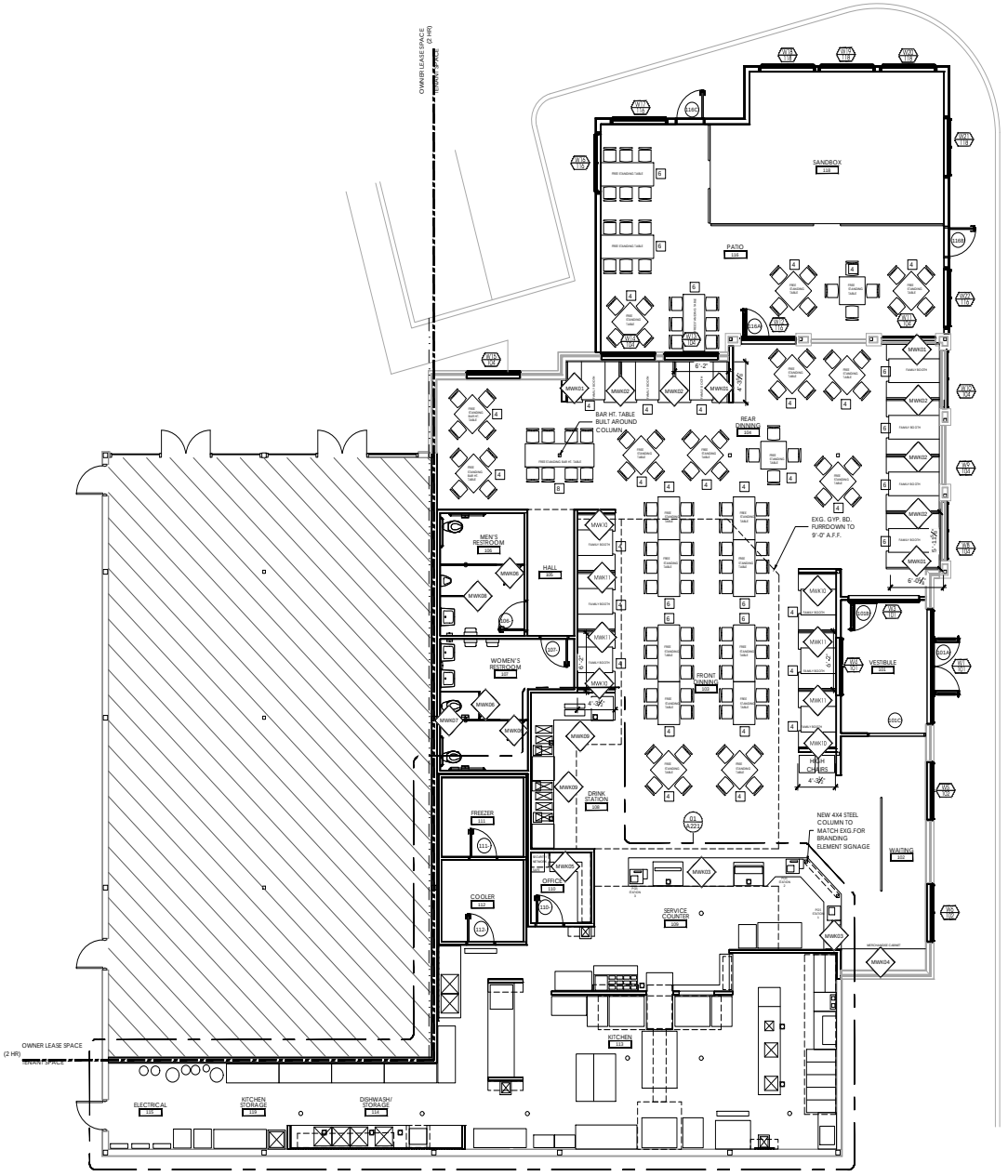

01 EQUIPMENT FLOOR PLAN
SCALE 3/16" = 1'-0"

MILLWORK TYPE LEGEND

Commercial Construction - Basis of Design Materials

Project Annotation -

- MWK01 - 20" X6'-0" SINGLE SIDED BENCH BOOTH SEAT W/ VINYL COVERED CUSHION
- MWK02 - 46" X6'-0" DOUBLE SIDED BENCH BOOTH SEAT W/ VINYL COVERED CUSHION
- MWK03 - POINT OF SALE (P.O.S.) SERVICE COUNTER
- MWK04 - SINGLE SIDED MECHANDISE CABINET
- MWK05 - Typical Office Cabinets
- MWK06 - Custom Toilet Partition w/ Door
- MWK07 - Custom Toilet Stall Divider Partition
- MWK08 - Custom Urinal Partition
- MWK09 - DRINK STATION
- MWK10 - 20" X4'-4" SINGLE SIDED BENCH BOOTH SEAT W/ VINYL COVERED CUSHION
- MWK11 - 46" X4'-4" DOUBLE SIDED BENCH BOOTH SEAT W/ VINYL COVERED CUSHION

DOOR AND STOREFRONT NOTES

3'-4"X7'-2"
- ALUMINUM DOOR
- ALUMINUM FRAME
- BUTT HINGES, CLOSER, PANIC, LATCHSET

3'-4"X7'-2"
- 1-3/4" PAINTED WOOD VENEER
- BUTT HINGES
- DOOR STOP
- KEYED OFFICE SET

3'-4"X7'-2"
- 1-3/4" RED OAK VENEER
- PLAIN SLICED
- BUTT HINGES
- CLOSER, PUSH/PULL

3'-0"X7'-2" EQUIPMENT DOORS
- TEMPERED VIEW WINDOW
- HARDWARE BY MANUFACTURER

12'-1 ½"X9' (PR. 3'-0"X7'-2" DOORS)
- ALUMINUM STOREFRONT
- 1" TEMPERED INSULATION GLASS IN SIDE LIGHTS/TRANSOM
- ¼" TEMPERED TINT IN DOOR
- BUTT HINGES, CLOSER, PANIC, LATCHSET

8'X9' (3'-0"X7'-2" DOOR)
- ALUMINUM STOREFRONT
- 1" TEMPERED INSULATION GLASS IN SIDE LIGHTS/TRANSOM
- ¼" TEMPERED TINT IN DOOR
- BUTT HINGES, CLOSER, PANIC, LATCHSET

6'X9' (3'-0"X7'-2" DOOR)
- ALUMINUM STOREFRONT
- 1" TEMPERED INSULATION GLASS IN SIDE LIGHTS/TRANSOM
- ¼" TEMPERED TINT IN DOOR
- BUTT HINGES, CLOSER, PANIC, LATCHSET

6'X4'-6"
- ALUMINUM STOREFRONT WINDOW
- 1" INSULATED
- TINTED

6'X4'-6"
- ALUMINUM STOREFRONT WINDOW
- 1" TEMPERED INSULATED
- TINTED

6'X4'-6" (OPERABLE)
- ALUMINUM STOREFRONT WINDOW
- 1" TEMPERED INSULATED
- TINTED

6'X4'-6" (FIXED)
- ALUMINUM STOREFRONT WINDOW
- 1" TEMPERED INSULATED
- TINTED

6'-7"X8'-0" (CASED OPENING)

GENERAL NOTES

1. ALL KITCHEN EQUIPMENT AND RELATED TAGS ARE NOTED ON SHEET A221.
2. COORDINATE ALL TENANT SUPPLIED EQUIPMENT w/ STUD WALL CONSTRUCTION.
3. ALL EXISTING WINDOWS TO BE "AL-2" BY OWNER
4. ALL EXISTING DOORS BY OWNER; 1" TEMPERED, TENTED, INSULATED.

SEATING TABULATION

INTERIOR SEATING

(4) 6-TOP BOOTH:	24 SEATS
(9) 4-TOP BOOTH:	36 SEATS
(2) 4-TOP BAR HT. BOOTH:	8 SEATS
(1) 8-TOP BAR HT. TABLE:	8 SEATS
(4) 6-TOP TABLES:	24 SEATS
(12) 4-TOP TABLES:	48 SEATS
TOTAL INTERIOR SEATS:	148 SEATS

EXTERIOR SEATING

(4) 4-TOP BOOTH:	16 SEATS
(3) 6-TOP TABLES:	18 SEATS
TOTAL EXTERIOR SEATS:	34 SEATS
SEATING TOTAL:	182 SEATS

© COPYRIGHT 2020 - wca design studio

WCA Design Studio, LLC
ARCHITECTURE & PLANNING
2315 50TH ST. Suite A
Lubbock, TX 79412
806-702-8969
www.wcadesignstudio.com

NOT FOR CONSTRUCTION OR REGULATORY APPROVAL

REPRODUCTION FORBIDDEN WITHOUT WRITTEN PERMISSION FROM WCA DESIGN STUDIO, LLC.

BLUE SKY BURGERS - MIDLAND 01
3001 W LOOP 250 N END CAP
MIDLAND, TEXAS 79705

A215 EQUIPMENT FLOOR PLAN

REVISIONS

SEE ADDED DRAWING: -
AOR: --
PM: ZCG
QC: CMB

03/03/2020
DATE

PROJECT NUMBER
2019-5409

A215
SHEET NUMBER

PHASE 1 : : PRICING SET

ALL DRAWINGS AND WRITTEN MATERIAL APPEARING HEREIN CONSTITUTE ORIGINAL AND UNPUBLISHED WORK OF WCA DESIGN STUDIO, LLC AND THE SAME MAY NOT BE USED, REPRODUCED OR DISCLOSED IN ANY MANNER WHATSOEVER WITHOUT THE EXPRESS WRITTEN PERMISSION OF WCA DESIGN STUDIO, LLC. ANY UNAUTHORIZED USE OF THESE DRAWINGS AND SPECIFICATIONS WILL BE AT THE SOLE RISK AND RESPONSIBILITY OF THE USER AND WITHOUT LIABILITY TO WCA DESIGN STUDIO, LLC.

P.L. 15.9

\2019-5409 BLUE SKY BURGERS - MIDLAND 01\SHEETS\SCHEMATIC - SITE PLAN REVIEW\A215 EQUIPMENT FLOOR PLAN.DWG

© COPYRIGHT 2020 - wca design studio

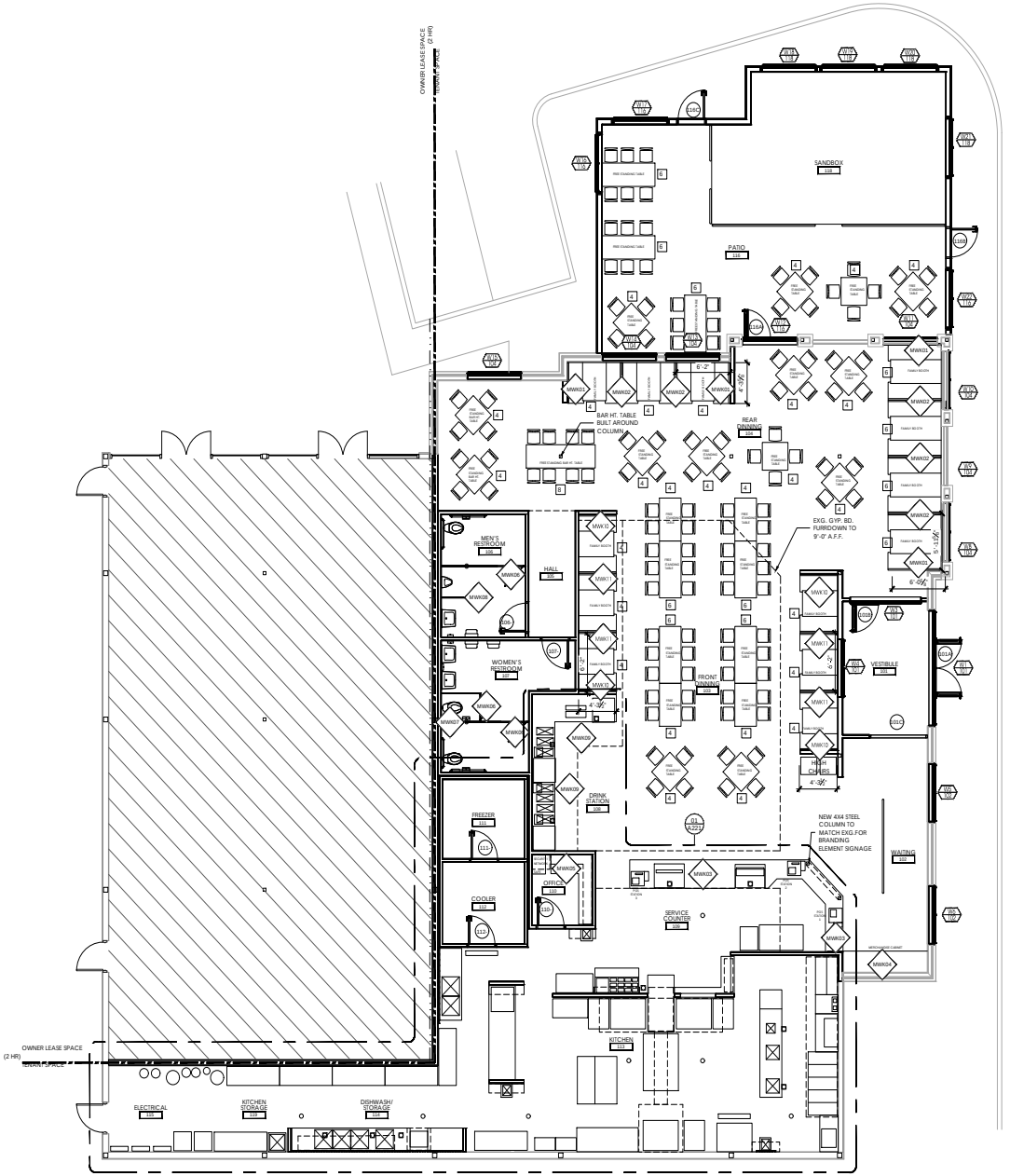

01 EQUIPMENT FLOOR PLAN
SCALE 3/16" = 1'-0"

MILLWORK TYPE LEGEND

Commercial Construction - Basis of Design Materials

Project Annotation -

- MWK01 - 20" X6'-0" SINGLE SIDED BENCH BOOTH SEAT W/ VINYL COVERED CUSHION
- MWK02 - 46" X6'-0" DOUBLE SIDED BENCH BOOTH SEAT W/ VINYL COVERED CUSHION
- MWK03 - POINT OF SALE (P.O.S.) SERVICE COUNTER
- MWK04 - SINGLE SIDED MECHANDISE CABINET
- MWK05 - Typical Office Cabinets
- MWK06 - Custom Toilet Partition w/ Door
- MWK07 - Custom Toilet Stall Divider Partition
- MWK08 - Custom Urinal Partition
- MWK09 - DRINK STATION
- MWK10 - 20" X4'-4" SINGLE SIDED BENCH BOOTH SEAT W/ VINYL COVERED CUSHION
- MWK11 - 46" X4'-4" DOUBLE SIDED BENCH BOOTH SEAT W/ VINYL COVERED CUSHION

DOOR AND STOREFRONT NOTES

3'-4"X7'-2"
- ALUMINUM DOOR
- ALUMINUM FRAME
- BUTT HINGES, CLOSER, PANIC, LATCHSET

3'-4"X7'-2"
- 1-3/4" PAINTED WOOD VENEER
- BUTT HINGES
- DOOR STOP
- KEYED OFFICE SET

3'-4"X7'-2"
- 1-3/4" RED OAK VENEER
- PLAIN SLICED
- BUTT HINGES
- CLOSER, PUSH/PULL

3'-0"X7'-2" EQUIPMENT DOORS
- TEMPERED VIEW WINDOW
- HARDWARE BY MANUFACTURER

12'-1 1/4"X9' (PR. 3'-0"X7'-2" DOORS)
- ALUMINUM STOREFRONT
- 1" TEMPERED INSULATION GLASS IN SIDE LIGHTS/TRANSOM
- 1/4" TEMPERED TINT IN DOOR
- BUTT HINGES, CLOSER, PANIC, LATCHSET

8'X9' (3'-0"X7'-2" DOOR)
- ALUMINUM STOREFRONT
- 1" TEMPERED INSULATION GLASS IN SIDE LIGHTS/TRANSOM
- 1/4" TEMPERED TINT IN DOOR
- BUTT HINGES, CLOSER, PANIC, LATCHSET

6'X9' (3'-0"X7'-2" DOOR)
- ALUMINUM STOREFRONT
- 1" TEMPERED INSULATION GLASS IN SIDE LIGHTS/TRANSOM
- 1/4" TEMPERED TINT IN DOOR
- BUTT HINGES, CLOSER, PANIC, LATCHSET

6'X4'-6"
- ALUMINUM STOREFRONT WINDOW
- 1" INSULATED
- TINTED

6'X4'-6"
- ALUMINUM STOREFRONT WINDOW
- 1" TEMPERED INSULATED
- TINTED

6'X4'-6" (OPERABLE)
- ALUMINUM STOREFRONT WINDOW
- 1" TEMPERED INSULATED
- TINTED

6'X4'-6" (FIXED)
- ALUMINUM STOREFRONT WINDOW
- 1" TEMPERED INSULATED
- TINTED

6'-7"X8'-0" (CASED OPENING)

GENERAL NOTES

1. ALL KITCHEN EQUIPMENT AND RELATED TAGS ARE NOTED ON SHEET A221.
2. COORDINATE ALL TENANT SUPPLIED EQUIPMENT w/ STUD WALL CONSTRUCTION.
3. ALL EXISTING WINDOWS TO BE "AL-2" BY OWNER
4. ALL EXISTING DOORS BY OWNER; 1" TEMPERED, TENTED, INSULATED.

SEATING TABULATION

INTERIOR SEATING

(4) 6-TOP BOOTH:	24 SEATS
(9) 4-TOP BOOTH:	36 SEATS
(2) 4-TOP BAR HT. BOOTH:	8 SEATS
(1) 8-TOP BAR HT. TABLE:	8 SEATS
(4) 6-TOP TABLES:	24 SEATS
(12) 4-TOP TABLES:	48 SEATS
TOTAL INTERIOR SEATS:	148 SEATS

EXTERIOR SEATING

(4) 4-TOP BOOTH:	16 SEATS
(3) 6-TOP TABLES:	18 SEATS
TOTAL EXTERIOR SEATS:	34 SEATS
SEATING TOTAL:	182 SEATS

WCA Design Studio, LLC
ARCHITECTURE & PLANNING
2315 50TH ST. Suite A
Lubbock, TX 79412
806-702-8969
www.wcadesignstudio.com

NOT FOR CONSTRUCTION OR REGULATORY APPROVAL

REPRODUCTION FORBIDDEN WITHOUT WRITTEN PERMISSION FROM WCA DESIGN STUDIO, LLC.

BLUE SKY BURGERS - MIDLAND 01

3001 W LOOP 250 N END CAP
MIDLAND, TEXAS 79705

A215 EQUIPMENT FLOOR PLAN

PHASE 1 : : PRICING SET

REVISIONS

SEE ADDED DRAWING: -
AOR: --
PM: ZCG
QC: CMB

03/03/2020
DATE

PROJECT NUMBER
2019-5409

A215
SHEET NUMBER

ALL DRAWINGS AND WRITTEN MATERIAL APPEARING HEREIN CONSTITUTE ORIGINAL AND UNPUBLISHED WORK OF WCA DESIGN STUDIO, LLC. AND THE SAME MAY NOT BE DUPLICATED, USED OR DISCLOSED WITHOUT WRITTEN CONSENT OF WCA DESIGN STUDIO, LLC. ANY PUBLICATION OF THIS PLAN OR DESIGN CONSTITUTES A GENERAL PUBLICATION AND CONSENT FOR USE BY COMPETITORS IS HEREBY GIVEN. VISUAL CONTACT WITH THESE PLANS OR DESIGN SHALL CONSTITUTE PRIMA FACIE EVIDENCE OF ACCEPTANCE OF THESE RESTRICTIONS.

P.L. 15.10

H:\409 BLUE SKY BURGERS - MIDLAND 01\SHEETS\SCHEMATIC - SITE PLAN REVIEW\A215 EQUIPMENT FLOOR PLAN.DWG

MIDLAND
Planning Division

Specific Use Designation with Term for the Sale of Alcoholic Beverages for On-Premises Consumption

Project Number: SUD-20-0003

Case Number: _____

Applicant *(if acting as Agent, see affidavit on page 2)* Printed Name: Garrett Haley		Phone (806) 722-1022 Email garrett@wheelhousetexas.com	
Address 6502 Slide Road, Suite #202	City Lubbock	State TX	Zip 79424

Property Owner Printed Name: Brady Collier		Phone (806) 722-1201 Email brady@wheelhousetexas.com	
Address 6502 Slide Road, Suite #202	City Lubbock	State TX	Zip 79424

Representative *(if different from Applicant or Property Owner)* Firm: _____ Printed Name:		Phone ( ) Email	
Address	City	State	Zip

Street Address: 3001 W Loop 250 N

Business Name: Blue Sky of Texas

Legal Description Lot: 2A Block: 1A Subdivision: Midkiff Plaza, Section 8

Current Zoning: Planned Development District

Reason for Request: Our tenant, Blue Sky of Texas, intends to offer beer and wine on their restaurant menu

Type of Business *(restaurant, bar, lounge, nightclub, etc.)*: Fast casual restaurant

Proposed/Current Days and Hours of Operation: Monday - Saturday, 11am - 10pm

Proposed Days and Hours of Alcohol Service: Monday - Saturday, 11am - 10pm

Total Square Footage of Business: Leasable area: 5,101 SF, plus patio area: 1,065 SF

Square Footage of Alcohol Serviceable Area: 6,166 SF

Restroom Fixtures:	**Toilets/Urinals:**	**Bathroom Sinks:**
Men	one / one	two
Women	**Toilets:** two	**Bathroom Sinks:** two

RECEIVED
MAR 10 2020

Submittal and Fees

Items to be submitted with this application form:

- Application Fee – Payable to the 'City of Midland'
- Dimensioned Floor Plan showing:
  - Seating ✓
  - Exits ✓
  - Restrooms ✓
  - Kitchen (if applicable) ✓
  - Total Square Footage ✓
  - Serviceable Square Footage ✓
- Dimensioned Site Plan showing:
  - Parking ✓
  - Business Footprint ✓
- Digital Copies of Floor Plan & Site Plan (PDF/JPEG)

Signatures

Applicant (signature):	Date: 3/9/2020
Applicant (printed): Garrett Haley	
Property Owner (signature):	Date: 3/9/2020
Property Owner (printed) : BRADY COLLIER, manager	

The Specific Use Designation with Term for the sale of all alcoholic beverages shall be considered officially received in the Planning office only when it has been submitted in full compliance with the provisions of Section 212 of the Texas Local Government Code and the Zoning Code of Ordinances of the City of Midland and when such required items for the application are also received.

All materials, including exhibits, submitted in support of an application, or displayed during a public hearing, shall remain the property of the City of Midland.

If an agent is authorized by the property owner to file and execute the application on behalf of the property owner, the agent must complete the affidavit below.

STATE OF TEXAS
COUNTY OF MIDLAND

Before me, the undersigned authority, on this day personally appeared _____ who, being by me duly sworn, upon oath says: That (s)he is authorized by _____, the owner of the above described property, to fully represent him/her in this application and that (s)he had the legal right, power and authority to sign said owner's name hereto as his/her attorney in fact.

_____
Authorized Agent (*signature*)

Subscribed and sworn to before me, this _____ day of _____, 20 ___, to certify which witness my hand and seal of office.

_____
NOTARY PUBLIC, MIDLAND COUNTY, TEXAS

****Application will not be considered for scheduling until reviewed by a planner.****

FOR OFFICE USE ONLY	
☐ Property Owner Authorization	☐ Dimensioned Floor Plan
☐ Application Fee	☐ Site Plan
Check #_____	☐ Plans in Digital Format (PDF/JPEG)
Received By:_____	Date:_____

****Application will not be considered for scheduling until reviewed by a planner.****

NOTICE OF CONFIDENTIALITY RIGHTS: IF YOU ARE A NATURAL PERSON, YOU MAY REMOVE OR STRIKE ANY OR ALL OF THE FOLLOWING INFORMATION FROM ANY INSTRUMENT THAT TRANSFERS AN INTEREST IN REAL PROPERTY BEFORE IT IS FILED FOR RECORD IN THE PUBLIC RECORDS: YOUR SOCIAL SECURITY NUMBER OR YOUR DRIVER'S LICENSE NUMBER.

SPECIAL WARRANTY DEED WITH VENDOR'S LIEN

STATE OF TEXAS §
§ KNOW ALL MEN BY THESE PRESENTS:
COUNTY OF MIDLAND §

FOR VALUABLE CONSIDERATION, the receipt and adequacy of which are hereby acknowledged, and the further consideration of a certain promissory note of even date herewith in the principal amount recited therein (the ***"Note"***), executed by Grantee (hereinafter defined) and payable to the order of WELLINGTON STATE BANK, a Texas banking corporation (***"Lender"***), the payment of which Note is secured by the vendor's lien retained herein, and is additionally secured by a deed of trust of even date herewith, executed by Grantee to Todd Pope, Trustee, for the benefit of Lender, JANET S. WALTON, INDIVIDUALLY AND AS INDEPENDENT ADMINISTRATIX OF THE ESTATE OF JUDKINS WALTON, DECEASED CAUSE NO. P19473 (***"Grantor"***), for and in consideration of the sum of Ten Dollars ($10.00) cash and other good and valuable consideration paid by WH MID 3001 LOOP 250, LP, a Texas limited partnership (***"Grantee"***), whose mailing address is 6502 Slide Road, Suite 202, Lubbock, Texas 79424, HAS GRANTED, BARGAINED, SOLD and CONVEYED, and by these presents DOES GRANT, BARGAIN, SELL and CONVEY unto Grantee all that certain land situated in Midland County, Texas, and described on **Exhibit "A"** which is attached hereto and incorporated herein by reference for all purposes, together with all appurtenances thereon or in anywise appertaining thereto and all buildings, structures, fixtures and improvements located thereon (said land, improvements and appurtenances being herein together referred to as the "***Property***").

This conveyance is made subject to the Permitted Exceptions set forth in **Exhibit "B"** hereto, to the extent the same are valid and subsisting and affect the Property, and except for ad valorem taxes assessed against the Property for the calendar year in which this conveyance becomes effective (which are hereby assumed by Grantee), Grantee does not assume or in any manner agree to pay or indemnify Grantor for any indebtedness secured by any lien against, or interest in, the Property or any portion thereof.

TO HAVE AND TO HOLD the Property unto Grantee, and Grantee's heirs, legal representatives, successors and assigns forever, and Grantor does hereby bind Grantor, and Grantor's heirs, legal representatives, successors and assigns to WARRANT and FOREVER DEFEND, all and singular the Property unto Grantee and Grantee's heirs, legal representatives, successors and assigns, against every person whomsoever lawfully claiming or to claim the same or any part thereof subject, however, as aforesaid, when the claim is by, through, and under Grantor, but not otherwise.

For the same consideration, Grantor hereby GRANTS, BARGAINS, SELLS and CONVEYS, without warranty express or implied, all interest, if any, of Grantor in (i) strips or gores, if any, between the Property and abutting properties and (ii) any land lying in or under the bed of any street, alley, road or right-of-way, opened or proposed, abutting or adjacent to the Property.

To secure the payment of the Note, the vendor's lien and superior title are retained against the Property until the Note and all interest thereon is fully paid and satisfied according to its face, tenor, effect and reading, and Grantor, for value received from the Lender, as recited above, does hereby TRANSFER, ASSIGN, and SET OVER, without recourse, unto the Lender, its successors and assigns, said vendor's lien retained to secure the Note together with the superior title remaining in Grantor.

[SIGNATURE PAGE FOLLOWS]

EXECUTED this 30th day of December, 2019.

GRANTOR:

Janet S. Walton

Janet S. Walton, individually and
as Independent Administratix of the Estate of
Judkins Walton, Deceased Cause No. P19473

STATE OF TEXAS §
§
COUNTY OF MIDLAND §

This instrument was acknowledged before me on the 30th day of December, 2019, by Janet S. Walton, individually and as Independent Administratix of the Estate of Judkins Walton, Deceased Cause No. P19473.

NOTARY PUBLIC STATE OF TEXAS
RUBY KAMALI
My Notary ID # 125761745
Expires July 14, 2022

Name (Print):
Notary Public, State of Texas

After Recording, Return To:
WH MID 3001 LOOP 250, LP
6502 Slide Road, Suite 202
Lubbock, Texas 79424

EXHIBIT A
Legal Description of the Property

BEING 0.643 ACRE OF LAND, LYING IN AND BEING SITUATED OUT SECTION 16, BLOCK 39, T-1-S, T & P RR CO. SURVEY, MIDLAND COUNTY, TEXAS, BEING THE NORTHWEST PORTION OF LOT 2A, BLOCK 1A, MIDKIFF PLAZA, SECTION 8, AN ADDITION TO THE CITY OF MIDLAND RECORDED IN CABINET D, PAGE 332 OF THE PLAT RECORDS OF MIDLAND COUNTY, TEXAS, AND BEING ALL OF THAT SAME 0.643 ACRE TRACT CONVEYED TO JUDD WALTON BY DEED RECORDED IN VOLUME 1460, PAGE 521 OF THE OFFICIAL PUBLIC RECORDS OF MIDLAND COUNTY, TEXAS; SAID 0.643 ACRE OF LAND BEING MORE PARTICULARLY DESCRIBED AS FOLLOWS AND AS SURVEYED UNDER THE SUPERVISION OF JOHN F. WATSON & COMPANY IN AUGUST, 2019:

Beginning at point in the south r-o-w line of Loop 250 for the northerly common corner of said Lot 2A and Midkiff Plaza, Section 13, an addition to the City of Midland recorded in Cabinet F, Page 31 of said Plat Records, and the northwest corner hereof and from which a concrete monument with brass cap (TXDOT monument) found for an angle point of said r-o-w line bears South 60°46'10" West a distance of 234.13 feet along said r-o-w line;

THENCE North 60°46'10" East a distance of 199.98 feet along said r-o-w line to a point for the northeast corner hereof and from which an iron rod with aluminum cap found for an angle point of said r-o-w line bears North 60°46'10" East a distance of 284.66 feet along said r-o-w line;

THENCE South 14°20'57" East a distance of 170.20 feet to a 60D nail set for the southeast corner hereof;

THENCE South 75°26'51" West a distance of 193.27 feet to a 60D nail set in the common line of said Midkiff Plaza, Section 13 and said Lot 2A for the southwest corner hereof;

THENCE North 14°20'57" West a distance of 119.53 feet along said common line to the POINT OF BEGINNING and containing 0.643 acre of land, more or less.

EXHIBIT B
Permitted Exceptions

1. Oil and Gas Leases of record under Document No. 2019-2437 and 2019-3101, Official Records, Midland County, Texas as noted on survey by John G. Watson, RPLS No. 5498, of John F. Watson & Company, dated August 31, 2019.

2. Easement to Energas of record in Volume 877, Page 85, Deed Records, Midland County, Texas as noted on survey by John G. Watson, RPLS No. 5498, of John F. Watson & Company, dated August 31, 2019.

3. Easements executed by Midland Plaza of record in Volume 783, Page 350 and 366, Deed Records, Midland County, Texas as noted on survey by John G. Watson, RPLS No. 5498, of John F. Watson & Company, dated August 31, 2019.

4. 10' TESCO Easement of record in Volume 737, Page 172, Deed Records, Midland County, Texas as noted on survey by John G. Watson, RPLS No. 5498, of John F. Watson & Company, dated August 31, 2019.

5. 30' Access, 20' Utility, and 26' Drainage Easement as shown on survey prepared by John F. Watson.

6. Easements rights of way and setback lines as shown on the plat of record in Cabinet D, Page 332, Plat Records, Midland County, Texas as noted on survey by John G. Watson, RPLS No. 5498, of John F. Watson & Company, dated August 31, 2019.

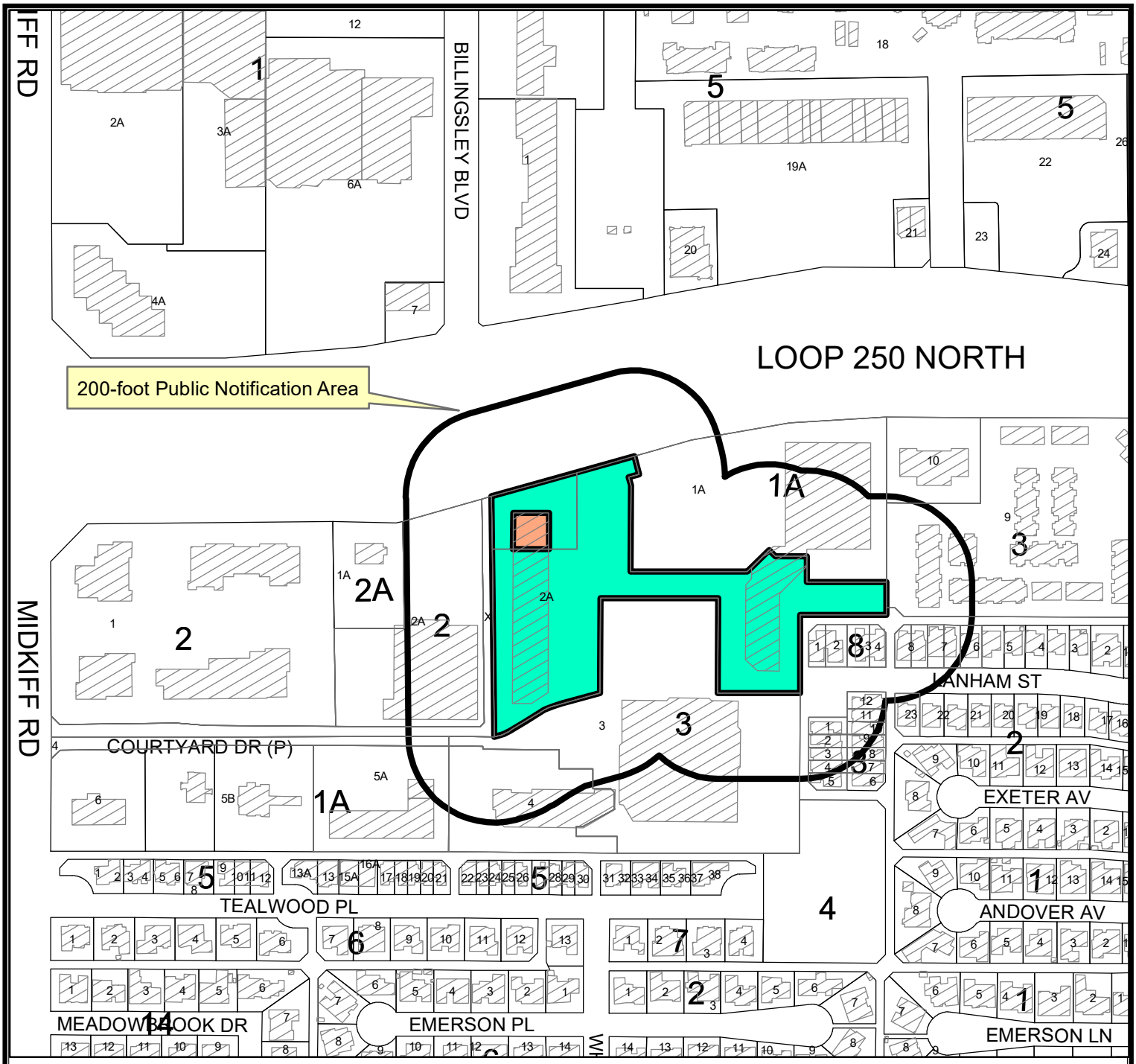

LOCATION MAP

SUD-20-0073 **Scale: 1" = 333'**

Hold a public hearing and consider a request by Garret Haley for a Specific Use Designation with Term for the sale of all alcoholic beverages for on-premises consumption, in a restaurant, on a 6,166 square foot portion of Lot 2A, Block 1A, Midkiff Plaza Addition, Section 8, City and County of Midland, Texas.

Generally located on the south side of W. Loop 250 N., approximately 1,036-feet east of N. Midkiff Road. (Council District 1)

LEGEND

- CITY LIMITS
- PARCEL
- PRIVATE BLDGS

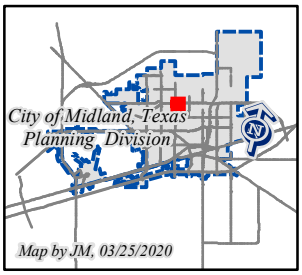

©THE CITY OF MIDLAND - 2020
THIS DATA IS NOT A SUBSTITUTION FOR A SURVEY PRODUCT, NOR IS IT DESIGNED TO BE USED AS A PRIMARY TOOL IN PERMITTING OR OTHER DECISIONS BASED SOLELY ON THE INFORMATION CONTAINED HEREIN.
THE CITY OF MIDLAND SHALL NOT BE RESPONSIBLE FOR ANY DECISIONS BASED UPON THE USE OF THIS DATA.

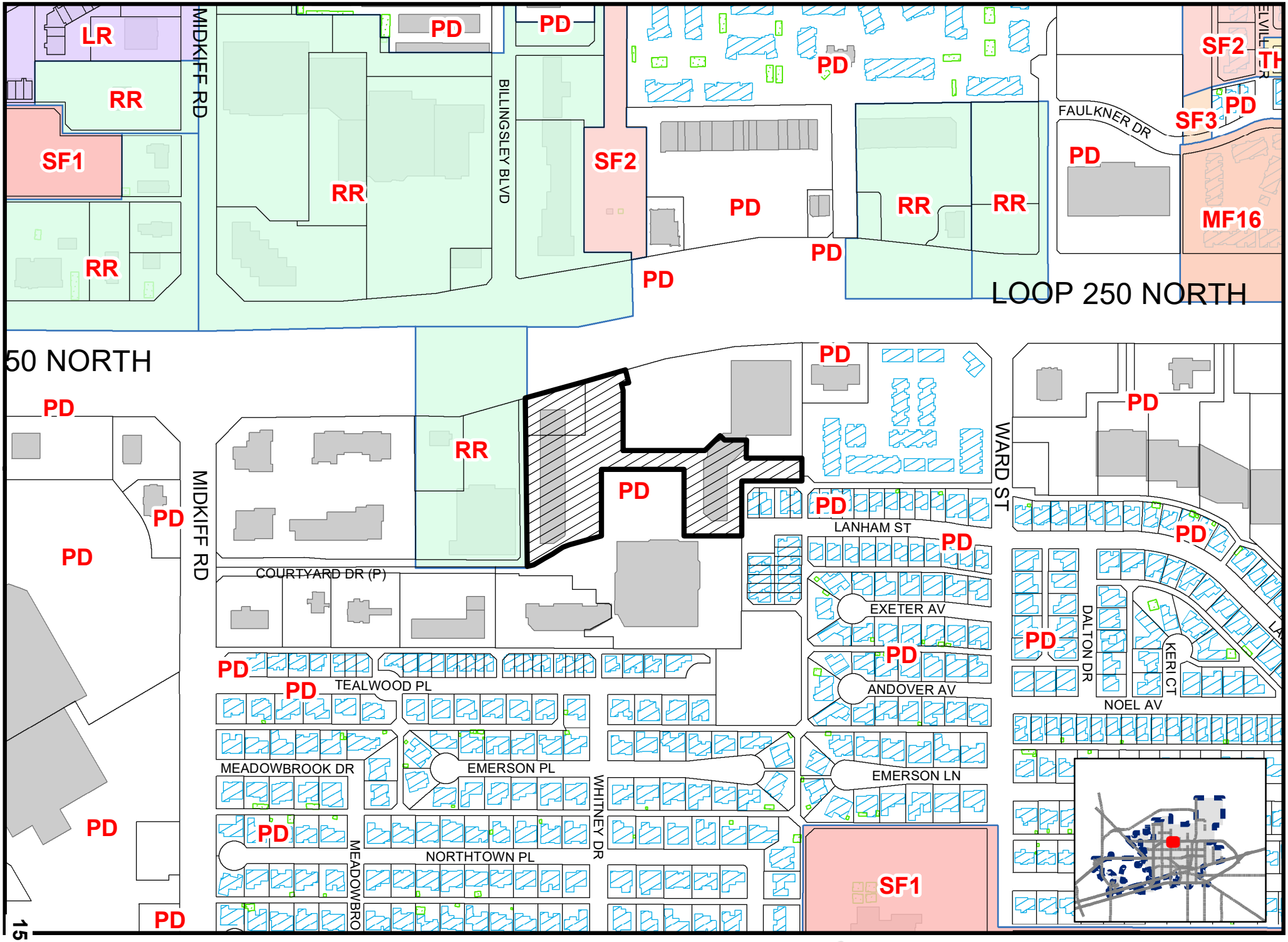

15.20

ap By JM, 3/27/2020

SUD-20-0073

Scale: 1" = 400'

ZONING MAP

© THE CITY OF MIDLAND - 2020: THIS DATA IS NOT A SUBSTITUTION FOR A SURVEY PRODUCT, NOR IS IT DESIGNED TO BE USED AS A PRIMARY TOOL IN PERMITTING OR OTHER DECISIONS BASED SOLELY ON THE INFORMATION CONTAINED HEREIN. THE CITY OF MIDLAND SHALL NOT BE RESPONSIBLE FOR ANY DECISIONS BASED UPON THE USE OF THIS DATA.

PR

ORDINANCE NO. 6398

AN ORDINANCE REPEALING ORDINANCE NO. 5965 AND AMENDING ORDINANCE NO. 5476 CREATING A "PLANNED DISTRICT" FOR A HOUSING PROJECT AND SHOPPING CENTER SO AS TO ADOPT DETAILED SITE PLAN 1 AND DETAILED SITE PLAN 2 WHICH WOULD PERTAIN TO A PORTION OF THE SHOPPING CENTER AREA AND TO ADD A NEW PARAGRAPH G TO SECTION TWO OF ORDINANCE NO. 5476; PROVIDING FOR CERTAIN SPECIAL CONDITIONS AND RESTRICTIONS AS SET OUT HEREIN; CONTAINING A CUMULATIVE CLAUSE; CONTAINING A SAVINGS AND SEVERABILITY CLAUSE; PROVIDING FOR A MAXIMUM PENALTY OR FINE OF ONE THOUSAND DOLLARS ($1,000.00); AND ORDERING PUBLICATION

WHEREAS, the City Planning and Zoning Commission and the Governing Body of the City of Midland, in compliance with the City Charter and the State law with reference to the creation of "Planned Ditricts" under the zoning ordinance regulations and zoning map, have given the requisite notices by United States Mail, publication and otherwise; and after a full and fair hearing to all of the property owners generally and particularly to those interested persons situated in the affected area and in the vicinity thereof; the Governing Body finds that the public health, safety and general welfare will be best served by repealing Ordinance No. 5965 and amending the "Planned District" created by Ordinance No. 5476 as set out hereinafter and subject to the conditions and restrictions set out hereinafter;

NOW, THEREFORE, BE IT ORDAINED BY THE CITY COUNCIL OF THE CITY OF MIDLAND, TEXAS:

SECTION ONE. That said Ordinance No. 5476 should be amended so as to adopt the attached Detailed Site Plan 1 and Detailed Site Plan 2, attached hereto as Exhibits "A" and "B", and made a part hereof for all legal purposes, which pertained to a portion of the shopping center area of the "Planned District".

SECTION TWO. That Section Two of said Ordinance No. 5476 is hereby amended so as to add a new Paragraph G to hereafter read as follows:

G. That development of the property shall meet the following special conditions:

1. That development of the property within the area shown on the attached detailed site plans identified as Exhibit "A", Detailed Site Plan 1, and Exhibit "B", Detailed Site Plan 2, shall conform in all respects to the regulations applicable to an "LR-2", Local Retail District, except where greater height limits are specified for office buildings on the site plan and, in addition, shall conform to the said site plans in all respects.

2. The maximum height of the office building identified on Exhibit "B", Detailed Site Plan 2, adjacent to Loop 250, shall be two (2) stories and shall not exceed forty-two (42) feet, including accessory structures such as chimneys, cooling towers, elevator bulkheads, penthouses, tanks, water towers, and other mechanical equipment and parapet walls which extend above roof level. The identified office building shall not exceed 25,100 square feet in gross building floor area.

3. The single story retail building identified on Exhibit "B", Detailed Site Plan 2, shall not exceed a maximum twenty (20) feet in height and a maximum 23,357 square feet in floor area.

4. That each building shown on Exhibit "A", Detailed Site Plan 1, and Exhibit "B", Detailed Site Plan 2, shall be constructed within the perimeter of the building lines as shown and dimensioned on said exhibits.

5. That areas identified as landscaped areas on Exhibit "A", Detailed Site Plan 1, and Exhibit "B", Detailed Site Plan 2, including those areas within the rights-of-way of Loop 250, which are not areas which would be devoted to required public sidewalks, shall be planted in natural plant materials and shall thereafter be maintained in a healthy, growing condition.

6. That entrances along those walls of buildings identified with an asterisk (*) on Exhibits "A" and "B" shall be exclusively public entrances to main retail, dining and other customer space, or to main office space and shall not include entrances to stock or service areas or noncustomer office areas supporting retail use, or to kitchen areas of the buildings.

7. That business signs shall be located only on the face of the building, except for the three (3) pole or pylon signs described on Exhibit "A", Detailed Site Plan 1.

8. That a final plat of that area described in Exhibit "B", Detailed Site Plan 2, shall be approved and filed of record in the Midland County Courthouse prior to the issuance of a building permit on any portion of the area within this tract.

SECTION THREE. That definitions given in the zoning regulations contained in the City Code of the City of Midland, Texas, shall be applicable to such of those terms as are used herein.

SECTION FOUR. The provisions of this ordinance are to be cumulative of all other ordinances or parts of ordinances governing or regulating the same subject matter as that covered herein;

provided, however, that all prior ordinances or parts of ordinances inconsistent with or in conflict with any of the provisions of this ordinance are hereby expressly repealed to the extent of any such inconsistency or conflict, and Ordinance No. 5965 is expressly repealed.

SECTION FIVE. If any section, subsection, sentence, clause or phrase of this ordinance is, for any reason, held to be unconstitutional or invalid, such holding shall not affect the validity of the remaining portions of this ordinance. The Council of the City of Midland hereby declares that it would have passed this ordinance and each section, subsection, sentence, clause, or phrase hereof irrespective of the fact that any one or more sections, subsections, sentences, clauses, or phrases be declared unconstitutional or invalid.

SECTION SIX. The penalty for violation of this ordinance shall be in accordance with the general penalty provisions contained in Section 1-3-1 of the City Code of Midland, Texas, which provides for a fine not exceeding one thousand dollars ($1,000.00).

SECTION SEVEN. The City Secretary is hereby authorized and directed to publish the descriptive caption of this ordinance in the manner and for the length of time prescribed by law as an alternative method of publication.

The above and foregoing ordinance was duly proposed, read in full and adopted on first reading, the 8th day of May, A.D., 1984; and passed to second reading on motion of Councilman Davidson, seconded by Councilman Hatfield, by the following vote:

Councilmen voting "AYE":	Davidson, Hatfield, Akins, Marcum and Hotchkiss
Councilmen voting "NAY":	None

The above and foregoing ordinance was read in full and finally adopted by the following vote upon motion of Councilman Hotchkiss, seconded by Councilman Davidson, on the

22nd day of May, A.D., 1984, at a regular meeting of the City Council:

Councilmen voting "AYE": Hotchkiss, Davidson, Akins, and Hatfield

Councilmen voting "NAY": None

PASSED AND APPROVED THIS 22nd day of May, A.D., 1984.

G. Thane Akins, Mayor

ATTEST:

B. C. Clanton, City Secretary

APPROVED AS TO FORM:

J. M. Nuessle, City Attorney

15.25

The UPS Store
Michaels
Aaron's
Pier 1 Imports
HILLIARD
OFFICE SOLUTIONS
Midland
Pier 1 Imports

15.26

15.27

15.28

City Council Agenda

Approved for Agenda:
rwpatrick
City Manager's Office

MEETING DATE: 4/28/2020

TO: City Council / City Manager

FROM: Joseph Marynak, Planner

SUBJECT: Hold a public hearing and consider an ordinance on a request by Midland Platinum II, LLC., for a Specific Use Designation with Term for the sale of all alcoholic beverages for on-premises consumption, in a bar, on Lot 2A, Block 3, Westridge Park Addition, Section 10, City and County of Midland, Texas. (Generally located on the west side of Tradewinds Boulevard, approximately 300-feet south of Andrews Highway. Council District 4)

Purpose:

The applicant, Midland Platinum II, LLC., is requesting a Specific Use Designation with Term for the sale of all alcoholic beverages, for on premises consumption, in a bar, at 1505 Tradewinds Boulevard.

Recommended City Council Action

☒ Approve ☐ Deny ☐ Directional / Informational

Fiscal Impact:

This proposal does not have a significant financial impact to the city.

Discussion:

Current Zoning:

PD, Planned District for a Shopping Center. (Ordinance 8364)

Surrounding Zoning and Land Use:

The properties to the north, south, and east are zoned PD, Planned Districts for Shopping Centers, and are the locations of a restaurant, a shopping center, and a hotel, respectively. The properties to the east are zoned RR, Regional Retail District, and PD, Planned District for a Shopping Center, and are the locations of a car dealership and a vacant lot, respectively.

Analysis:

The property is located in a PD, Planned District for a Shopping Center, governed by Ordinance 8364, which has an underlying zoning of RR, Regional Retail District. This zoning district permits the sale and on premises consumption of alcoholic beverages in a bar, with the approval of a Specific Use Designation with Term.

The site is located at 1505 Tradewinds Boulevard, and does not currently have a Specific Use Designation for sale and on premises consumption of alcoholic beverages. The site currently has adequate parking and restroom facilities. The applicant is requesting alcohol service hours as the following:

Monday through Sunday from 4:00 p.m. to 12:00 a.m. (midnight)

The sale and on-premises consumption of alcoholic beverages will be limited to a 6,608-square foot portion of the hotel, which includes a lounge area, bar area, outdoor patios, and meeting rooms.

Per Midland City Code 5.4.4. –Prohibited place of business

The sale of any alcoholic beverage is hereby prohibited by any person, where the place of business of any such dealer is within 300 feet of any church, public school, public school ground, athletic stadium used by any public school or public hospital, the measurements to be along the property lines of the street fronts and from front door to front door and in a direct line across intersections where they occur.

There are no churches, private schools, public schools, public school grounds, athletic stadium, public hospital within 300 feet measurement along the property lines of the street fronts, and from the front door in a direct line across intersection where they occur within this site.

This project has been circulated to all City departments for review. Below are the department comments.

Fire: (Approved)

No objection.

Engineering: (Approved)

No objection.

Transportation: (Approved)

No objection.

Building Code: (Approved)

The SUD for Midland Platinum is acceptable. The property must adhere to the maximum occupant load of 439. Occupancy loads must be posted in accordance with section 1004.3 of the 2015 International Fire Code.

Planning:

The request is in compliance with the Tall City Tomorrow Comprehensive Plan, Chapter 6-Character Plan Goal 4, “Encourage the development of places where Midland residents can gather and socialize to build connections.” (Tall City Tomorrow page 137) Midland Platinum, LLC, will create a vibrant atmosphere where visitors can feel relaxed and enjoy drinks.

This request was recommended for approval at the April 6, 2020 Planning and Zoning Commission meeting.

This request meets all requirements; therefore, staff recommends approval of the request for a Specific Use Designation with Term for the sale of all alcoholic beverages, for on-premises consumption, in a bar, subject to Condition A through E.

Conditions:

A. That the serviceable area of the bar shall be limited to approximately 6,608 square feet as shown in Exhibit “A”, which is attached hereto and incorporated herein for all purposes.

B. That the occupancy of the establishment shall not exceed the maximum occupancy determined by the Building Code and Fire Code.

C. That the establishment shall meet all requirements of the Fire Department and Code Administration.

D. That the sale and on-premises consumption of alcoholic beverages shall conform to applicable state and local laws.

E. That the days and hours of alcoholic beverages sales and consumption shall be limited to:

Monday through Sunday, from 4:00 p.m. to 12:00 a.m. (midnight)

Letters of Objection:

As of April 22, 2020, staff has not received any letters of objection.

Attachments:

Floor Plan (Exhibit A)
Ordinance 8364
Application
Maps

ORDINANCE NO. _____

AN ORDINANCE AMENDING THE ZONING DISTRICT MAP OF THE CITY OF MIDLAND TO GRANT A SPECIFIC USE DESIGNATION WITH TERM FOR LOT 2A, BLOCK 3, WESTRIDGE PARK ADDITION, SECTION 10, CITY AND COUNTY OF MIDLAND, TEXAS (GENERALLY LOCATED ON THE WEST SIDE OF TRADEWINDS BOULEVARD, APPROXIMATELY 300 FEET SOUTH OF ANDREWS HIGHWAY), WHICH IS PRESENTLY ZONED PD, PLANNED DEVELOPMENT DISTRICT FOR A SHOPPING CENTER, ALLOWING SAID PROPERTY TO BE USED FOR THE SALE OF ALL ALCOHOLIC BEVERAGES IN A BAR FOR ON-PREMISES CONSUMPTION; MAKING SAID DESIGNATION SUBJECT TO CERTAIN CONDITIONS AND RESTRICTIONS CONTAINED HEREIN; CONTAINING A CUMULATIVE CLAUSE; CONTAINING A SAVINGS AND SEVERABILITY CLAUSE; PROVIDING FOR A MAXIMUM PENALTY OR FINE OF TWO THOUSAND DOLLARS ($2,000.00); AND ORDERING PUBLICATION

WHEREAS, the City Planning and Zoning Commission and the Governing Body of the City of Midland, Texas, in compliance with the City Charter, the City Code, and State law, have given the requisite notices by United States mail, publication and otherwise; and after holding due hearings affording a full and fair hearing to all of the property owners generally, and particularly to those interested persons situated in the affected area and in the vicinity thereof, the Governing Body of the City of Midland finds that the public convenience will be best served by granting a Specific Use Designation With Term for Lot 2A, Block 3, Westridge Park Addition, Section 10, City and County of Midland, Texas (the "Property") as set out hereinafter;

NOW, THEREFORE, BE IT ORDAINED BY THE CITY COUNCIL OF THE CITY OF MIDLAND, TEXAS:

SECTION ONE. That the Zoning District Map of the City of Midland, Texas, is hereby amended to grant the Property a Specific Use Designation With Term for the sale of all alcoholic beverages for on-premises consumption in a bar (the "Establishment"), together with the uses permitted in the present PD, Planned Development District for a Shopping Center.

SECTION TWO. That the Property shall be subject to the following conditions and restrictions:

A. That the serviceable area of the Establishment shall be limited to approximately 6,608 square feet as shown in Exhibit "A", which is attached hereto and incorporated herein for all purposes.

B. That the occupancy of the Establishment shall not exceed the maximum occupancy determined by the Building Code and Fire Code.

C. That the sale and on-premises consumption of alcoholic beverages shall conform to all applicable state and local laws.

D. That the days and hours of alcoholic beverage sales and consumption shall be limited to Monday through Sunday from 4:00 p.m. to 12:00 a.m. (midnight).

E. That the Establishment shall meet the requirements of the Fire Department and the Code Administration Division.

SECTION THREE. The provisions of this ordinance are to be cumulative of all other ordinances or parts of ordinances governing or regulating the same subject matter as that covered herein; provided, however, that all prior ordinances or parts of ordinances, inconsistent with or in conflict with any of the provisions of this ordinance are hereby expressly repealed to the extent of any such inconsistency or conflict.

SECTION FOUR. If any section, subsection, sentence, clause or phrase of this ordinance is, for any reason, held to be unconstitutional or invalid, such holding shall not affect the validity of the remaining portions of this ordinance. The Council of the City of Midland hereby declares that it would have passed this ordinance and each section, subsection, sentence, clause, or phrase hereof irrespective of the fact that any one or more sections, subsections, sentences, clauses, or phrases be declared unconstitutional or invalid.

SECTION FIVE. The penalty for violation of this ordinance shall be in accordance with the general penalty provisions contained in Section 1-3-1 of the City Code of Midland, Texas, which provides for a fine not exceeding two thousand dollars ($2,000.00).

SECTION SIX. The City Secretary is hereby authorized and directed to publish the descriptive caption of this ordinance in the manner and for the length of time prescribed by

the law as an alternative method of publication.

The above and foregoing ordinance was duly proposed, read in full and adopted on first reading, the _____ day of _____, A.D., 2020; and passed to second reading on motion of Council member _____, seconded by Council member _____, by the following vote:

Council members voting "AYE":

Council members voting "NAY":

The above and foregoing ordinance was read in full and finally adopted by the following vote upon motion of Council member _____, seconded by Council member _____, on the _____ day of _____, A.D., 2020, at a regular meeting of the City Council:

Council members voting "AYE":

Council members voting "NAY":

PASSED AND APPROVED THIS _____ day of _____, A.D., 2020.

_____
Patrick N. Payton, Mayor

ATTEST:

_____
Amy M. Turner, City Secretary

APPROVED AS TO CONTENT
AND COMPLETENESS:

_____
Robert Patrick, Assistant City Manager

_____
Charles Harrington, Director of Development Services

APPROVED ONLY AS TO FORM:

_____
John Ohnemiller, City Attorney

EXHIBIT "A"

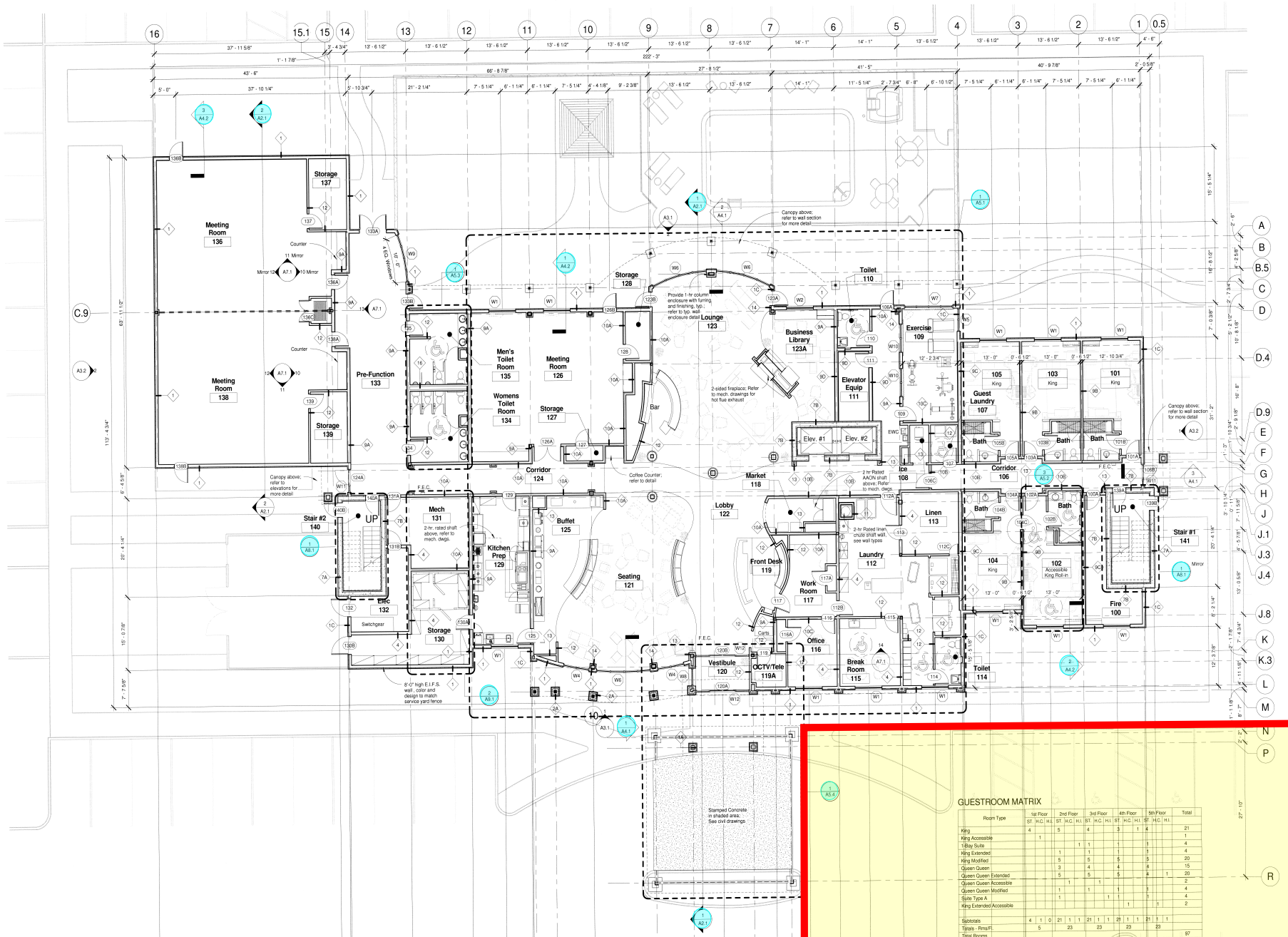

GUESTROOM MATRIX

Room Type	1st Floor ST.	1st Floor H.C.	1st Floor H.I.	2nd Floor ST.	2nd Floor H.C.	2nd Floor H.I.	3rd Floor ST.	3rd Floor H.C.	3rd Floor H.I.	4th Floor ST.	4th Floor H.C.	4th Floor H.I.	5th Floor ST.	5th Floor H.C.	5th Floor H.I.	Total
King	4			5			4			3	1	4				21
King Accessible		1														1
1-Bay Suite					1	1				1		1				4
King Extended				1		1				1		1				4
King Modified				5			5			5			5			20
Queen Queen				3			4			4			4			15
Queen Queen Extended				5			5			5			4	1		20
Queen Queen Accessible					1			1								2
Queen Queen Modified				1			1			1			1			4
Suite Type A																
King Extended Accessible											1			1		2
Subtotals	4	1	0	21	1	1	21	1	1	23	1	1	21	1	1	
Totals - Rms/Fl.		5			23			23			23			23		
Total Rooms																97

3di architecture
3di architecture
5314 Broadway
Lancaster, New York 14086
Phone: 716.635.6170 Fax: 716.633.0872
www.3diarchitects.com

Rev. No.	Date	Description

REGISTERED ARCHITECT
STATE OF TEXAS

Errors may occur in the transmission of electronic files. 3di Architects are not responsible for any claims, damages or expenses arising out of the unauthorized use of the information contained in electronic files.

Electronic files may not accurately reflect the final as-built conditions. It is the responsibility of the user to verify all layouts, dimensions and other related information.

This document may not be used or copied without prior written consent.

Owner:
PLATINUM HOSPITALITY MANAGEMENT
Platinum Hospitality Management
226 Jackson Meadows (615) 277-1090
Hermitage, TN 37076 (615) 277-1095 Fax

Project Name:
COURTYARD Marriott
1505 Tradewinds Boulavard
Midland, TX 79706

Sheet Title:
1st Floor Plan

Drawn By:	Project Date:	Sheet No.:
MAS MPC AJC	June 5, 2008	A1.1

3di Project No.: 05100

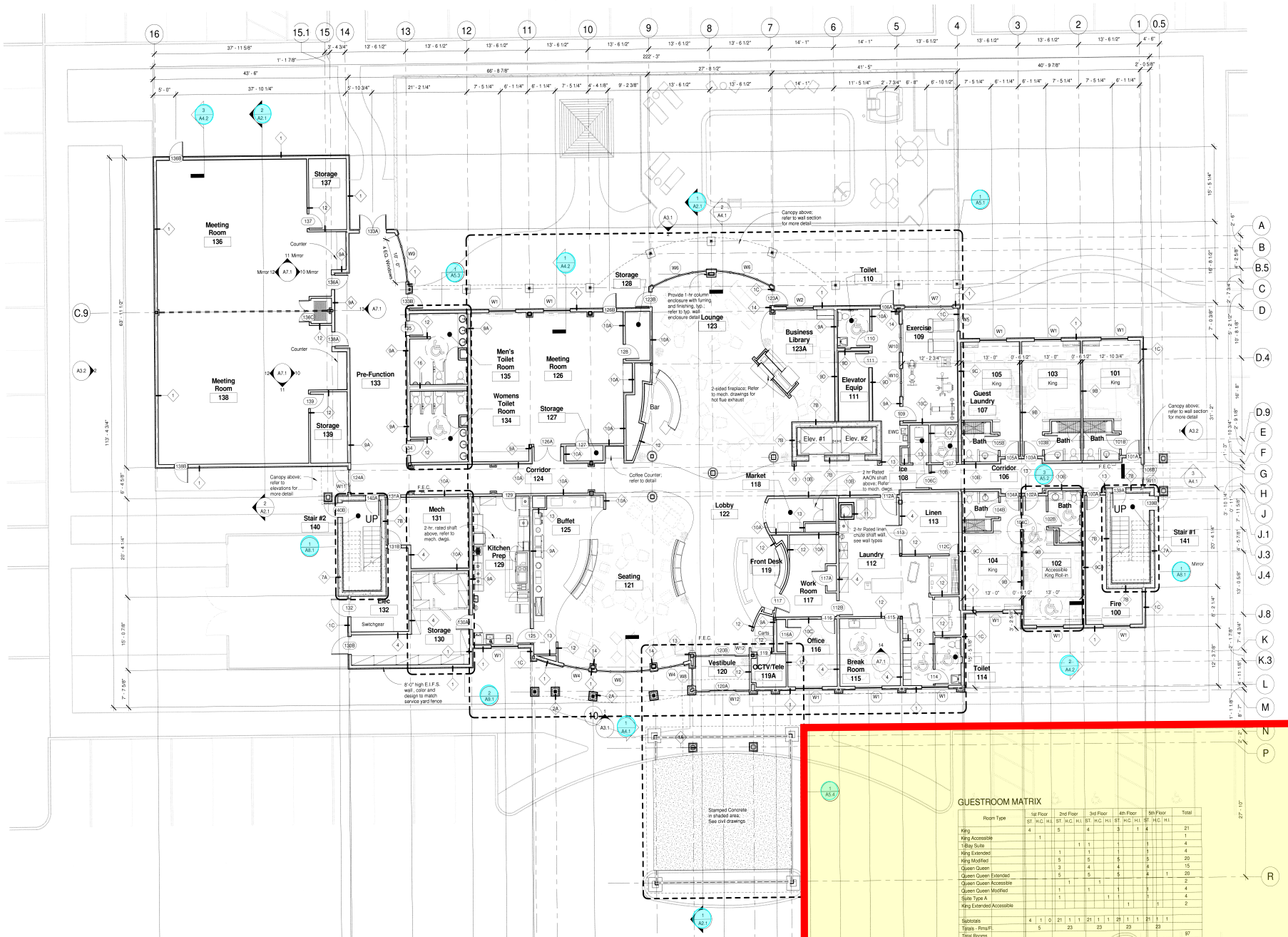

GUESTROOM MATRIX

Room Type	1st Floor ST.	1st Floor H.C.	1st Floor H.I.	2nd Floor ST.	2nd Floor H.C.	2nd Floor H.I.	3rd Floor ST.	3rd Floor H.C.	3rd Floor H.I.	4th Floor ST.	4th Floor H.C.	4th Floor H.I.	5th Floor ST.	5th Floor H.C.	5th Floor H.I.	Total
King	4			5			4			3	1	4				21
King Accessible		1														1
1-Bay Suite					1	1				1		1				4
King Extended				1		1				1		1				4
King Modified				5			5			5			5			20
Queen Queen				3			4			4			4			15
Queen Queen Extended				5			5			5			4	1		20
Queen Queen Accessible					1			1								2
Queen Queen Modified				1			1			1			1			4
Suite Type A				1			1			1			1			4
King Extended Accessible											1			1		2
Subtotals	4	1	0	21	1	1	21	1	1	23	1	1	21	1	1	
Totals - Rms/Fl.	5			23			23			25			23			
Total Rooms																97

3di architecture
3di architecture
5314 Broadway
Lancaster, New York 14086
Phone: 716.635.6170 Fax: 716.633.0872
www.3dirchitects.com

Rev. No.	Date	Description

REGISTERED ARCHITECT
STATE OF TEXAS
19208

Errors may occur in the transmission of electronic files. 3di Architects are not responsible for any claims, damages or expenses arising out of the unauthorized use of the information contained in electronic files.

Electronic files may not accurately reflect the final as-built conditions. It is the responsibility of the user to verify all layouts, dimensions and other related information.

This document may not be used or copied without prior written consent.

Owner:
PLATINUM HOSPITALITY MANAGEMENT
Platinum Hospitality Management
226 Jackson Meadows (615) 277-1090
Hermitage, TN 37076 (615) 277-1095 Fax

Project Name:
COURTYARD Marriott
1505 Tradewinds Boulavard
Midland, TX 79706

Sheet Title:
1st Floor Plan

Drawn By:	Project Date:	Sheet No.:
MAS MPC AJC	June 5, 2008	A1.1

3di Project No.: 05100

16.10

MIDLAND Planning Division

Specific Use Designation with Term for the Sale of Alcoholic Beverages for On-Premises Consumption

Project Number: SUD-20-0071

Case Number: _____

Applicant *(if acting as Agent, see affidavit on page 2)* Printed Name: Midland Platinum II LLC		Phone (615) 277 1100 Email vijay.patel@platinumcos.com	
Address 111 Broadway 3rd Fl	City Nashville	State TN	Zip 37201
Property Owner Printed Name: Midland Platinum II LLC		Phone (615) 405 4945 Email Legal@platinumcos.com	
Address 111 Broadway 3rd Fl	City Nashville	State TN	Zip 37201
Representative *(if different from Applicant or Property Owner)* Firm: Platinum Management Services LLC Printed Name: Rich Tuckwell-Skuda		Phone (702) 569-8588 Email rich.tuckwell-skuda@platinumcos.com	
Address 111 Broadway 3rd Fl	City Nashville	State TN	Zip 37201

Street Address: 1505 Trackwinds Blvd

Business Name: Courtyard by Marriott Midland

Legal Description
Lot: 2A Block: Three Subdivision: Westridge Park Addition Section 10

Current Zoning: Commercial

Reason for Request: on premise consumption

Type of Business *(restaurant, bar, lounge, nightclub, etc.)*: Hotel

Proposed/Current Days and Hours of Operation: 365 days, 7 days a week

Proposed Days and Hours of Alcohol Service: 4pm to 12pm 7days week

Total Square Footage of Business: 98,773 sqft.

Square Footage of Alcohol Serviceable Area:

Restroom Fixtures:	*Men*	**Toilets/Urinals:** 2	12	**Bathroom Sinks:** 3
	Women	**Toilets:** 3		**Bathroom Sinks:** 3

Submittal and Fees

Items to be submitted with this application form:

- Application Fee – Payable to the 'City of Midland'
- Dimensioned Floor Plan showing:
  - Seating
  - Exits
  - Restrooms
  - Kitchen (if applicable)
  - Total Square Footage
  - Serviceable Square Footage
- Dimensioned Site Plan showing:
  - Parking
  - Business Footprint
- Digital Copies of Floor Plan & Site Plan (PDF/JPEG)

Signatures

Applicant (signature): Vijay Patel	Date: 2/20/20
Applicant (printed): Vijay Patel	
Property Owner (signature): Vijay Patel	Date: 2/20/20
Property Owner (printed): Vijay Patel	

The Specific Use Designation with Term for the sale of all alcoholic beverages shall be considered officially received in the Planning office only when it has been submitted in full compliance with the provisions of Section 212 of the Texas Local Government Code and the Zoning Code of Ordinances of the City of Midland and when such required items for the application are also received.

All materials, including exhibits, submitted in support of an application, or displayed during a public hearing, shall remain the property of the City of Midland.

If an agent is authorized by the property owner to file and execute the application on behalf of the property owner, the agent must complete the affidavit below.

STATE OF ~~TEXAS~~ TENNESSEE
COUNTY OF ~~MIDLAND~~ DAVIDSON

Before me, the undersigned authority, on this day personally appeared Rick Tuckwell-Hyde who, being by me duly sworn, upon oath says: That (s)he is authorized by Vijay Patel, the owner of the above described property, to fully represent him/her in this application and that (s)he had the legal right, power and authority to sign said owner's name hereto as his/her attorney in fact.

Authorized Agent (*signature*)

Subscribed and sworn to before me this 20 day of February, 2020, to certify which witness my hand and seal of office.

MICHELLE MAYHAB STATE OF TENNESSEE NOTARY PUBLIC COUNTY OF DAVIDSON

NOTARY PUBLIC, ~~MIDLAND COUNTY, TEXAS~~ DAVIDSON COUNTY, TN

****Application will not be considered for scheduling until reviewed by a planner.****

FOR OFFICE USE ONLY	
☐ Property Owner Authorization	☐ Dimensioned Floor Plan
☐ Application Fee	☐ Site Plan
Check #_____	☐ Plans in Digital Format (PDF/JPEG)
Received By:_____	Date:_____

****Application will not be considered for scheduling until reviewed by a planner.****

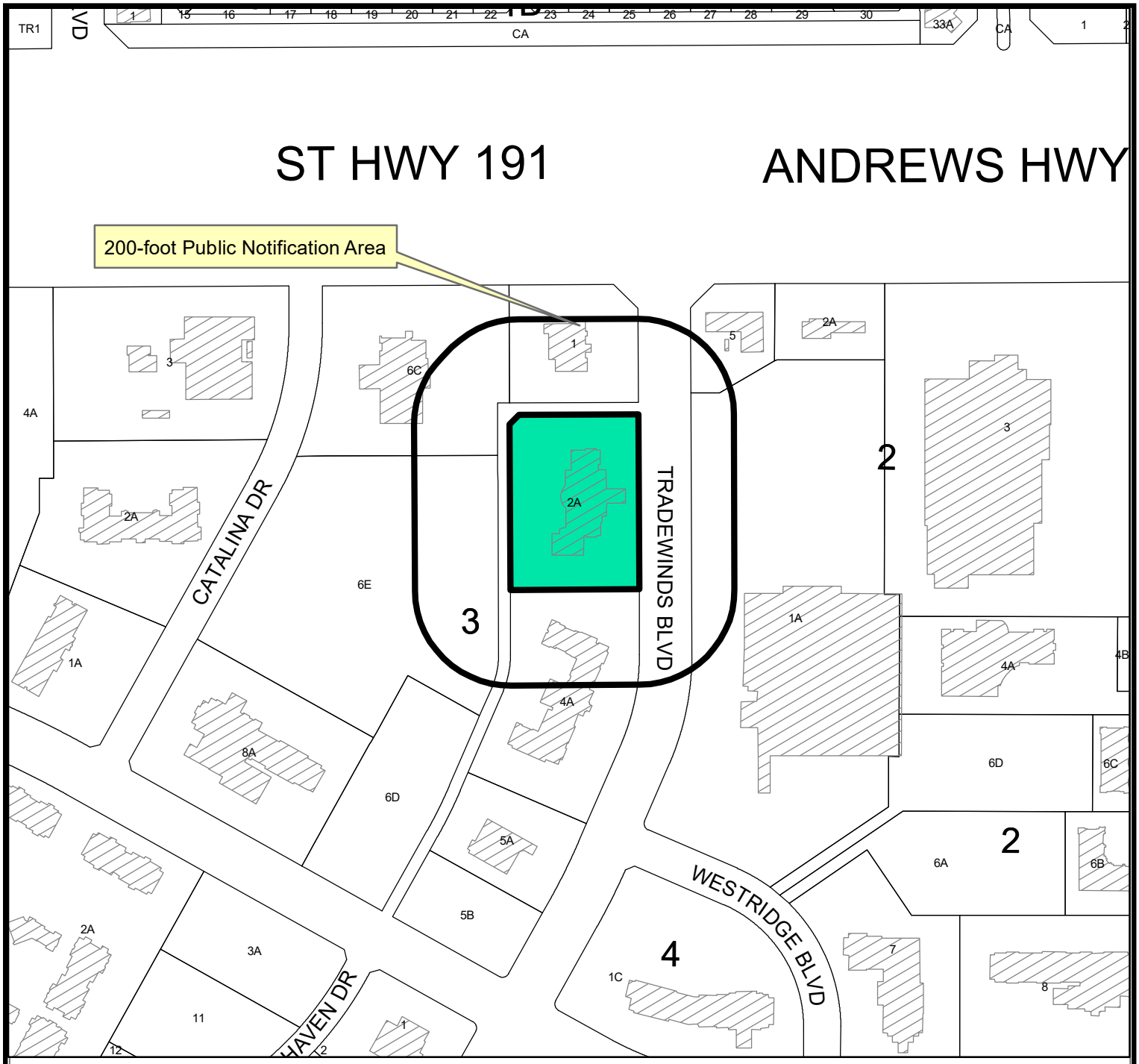

LOCATION MAP

SUD-20-0071 **Scale: 1" = 300'**

Hold a public hearing and consider a request by Midland Platinum, LLC, for a Specific Use Designation with Term for the sale of all alcoholic beverages for on-premises consumption, in a bar, on Lot 2A, Block 3, Westridge Park Addition, Section 10, City and County of Midland, Texas.

Generally located on the west side of Tradewinds Boulevard, approximately 300-feet south of Andrews Highway (Council District 4)

LEGEND

- CITY LIMITS
- PARCEL
- PRIVATE BLDGS

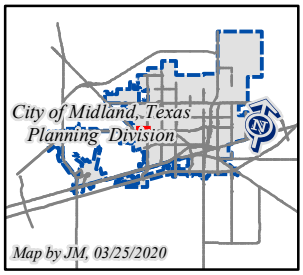

©THE CITY OF MIDLAND - 2020
THIS DATA IS NOT A SUBSTITUTION FOR A SURVEY PRODUCT, NOR IS IT DESIGNED TO BE USED AS A PRIMARY TOOL IN PERMITTING OR OTHER DECISIONS BASED SOLELY ON THE INFORMATION CONTAINED HEREIN.
THE CITY OF MIDLAND SHALL NOT BE RESPONSIBLE FOR ANY DECISIONS BASED UPON THE USE OF THIS DATA.

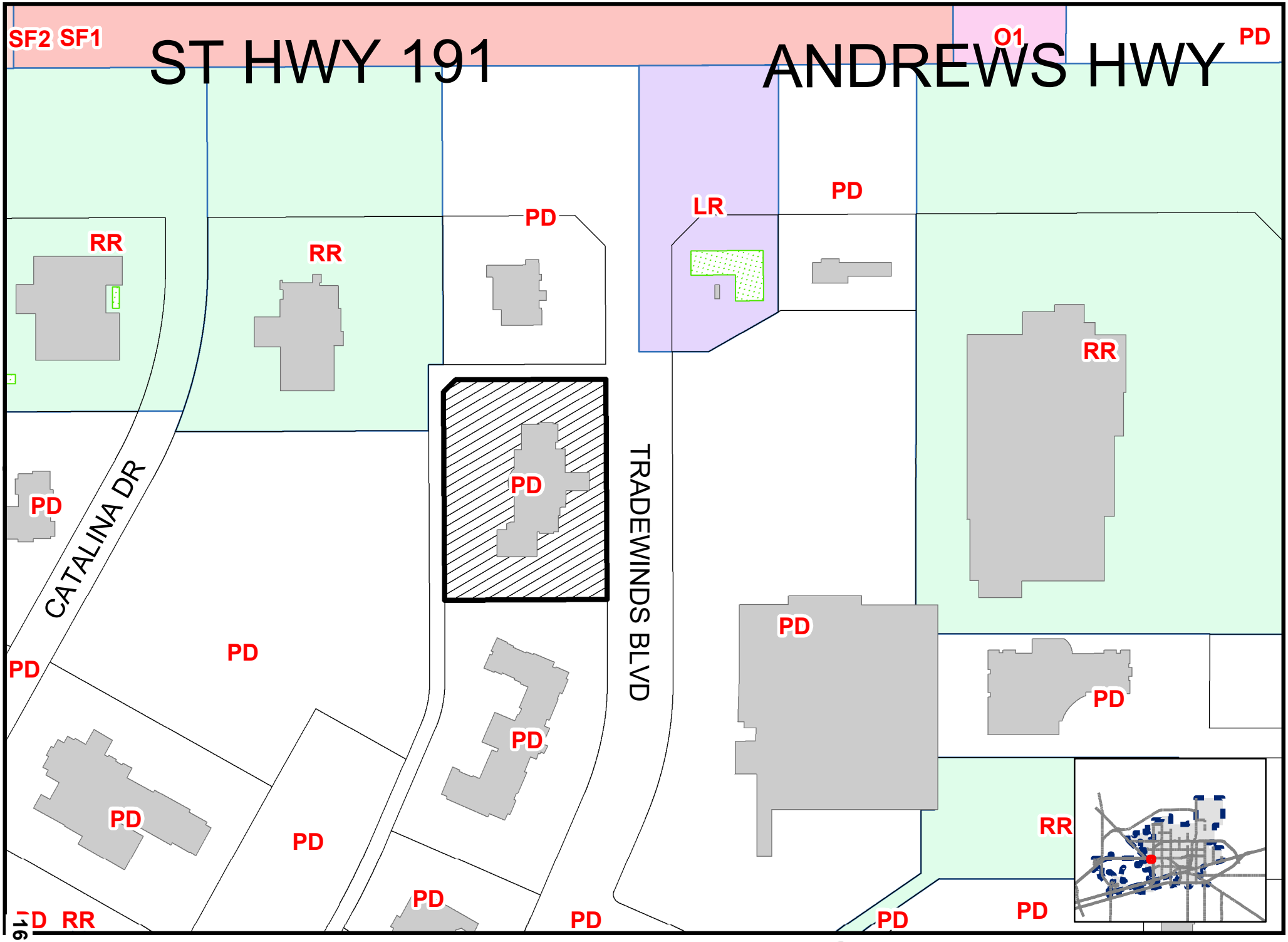

16.15

ap By JM, 3/30/2020

SUD-20-0071

Scale: 1" = 200'

ZONING MAP

© THE CITY OF MIDLAND - 2020: THIS DATA IS NOT A SUBSTITUTION FOR A SURVEY PRODUCT, NOR IS IT DESIGNED TO BE USED AS A PRIMARY TOOL IN PERMITTING OR OTHER DECISIONS BASED SOLELY ON THE INFORMATION CONTAINED HEREIN. THE CITY OF MIDLAND SHALL NOT BE RESPONSIBLE FOR ANY DECISIONS BASED UPON THE USE OF THIS DATA.

ORDINANCE NO. 8364

AN ORDINANCE CHANGING THE ZONING CLASSIFICATION AMENDING CHAPTER ONE, TITLE XI, OF THE CITY CODE OF MIDLAND, TEXAS, BY PERMITTING LOT 2A, BLOCK 3, WESTRIDGE PARK ADDITION, SECTION 10, CITY AND COUNTY OF MIDLAND, TEXAS WHICH IS PRESENTLY ZONED PD, PLANNED DISTRICT FOR A SHOPPING CENTER TO BE USED AS AN AMENDED PLANNED DISTRICT FOR A SHOPPING CENTER; CONTAINING A CUMULATIVE CLAUSE; CONTAINING A SAVINGS AND SEVERABILITY CLAUSE; PROVIDING FOR A MAXIMUM PENALTY OR FINE OF TWO THOUSAND DOLLARS ($2,000.00); AND ORDERING PUBLICATION

WHEREAS, by Ordinance No. 7981, adopted October 10, 2000, the City Council granted a "Planned District" for a Shopping Center; and

WHEREAS, the City Planning and Zoning Commission and the Governing Body of the City of Midland, in compliance with the City Charter and the State law with reference to the creation of Districts under the zoning ordinance regulations and zoning map, have given the requisite notices by United States mail, publication and otherwise; and after a full and fair hearing to all of the property owners generally and particularly to those interested persons situated in the affected area and in the vicinity thereof, the Governing Body finds that the public health, safety and general welfare will be best served by the creation of an Amended Planned District for a Shopping Center, as set out hereinafter;

NOW, THEREFORE, BE IT ORDAINED BY THE CITY COUNCIL OF THE CITY OF MIDLAND, TEXAS:

SECTION ONE. That Chapter 1, Title XI, of the City Code of Midland, Texas, and the official zoning map of the City of Midland, Texas, are hereby amended insofar as the hereinafter described property is concerned, which is presently zoned PD, Planned District for a Shopping Center, and it shall be used as an Amended Planned District for a Shopping Center, said property being described as follows:

> Being all of Lot 2A, Block 3, Westridge Park Addition, Section 10, City and County of Midland, Texas.

SECTION TWO. That the use and development of this property as a hotel shall conform in all respects to the attached site plan (Exhibit "A") and elevation drawings (Exhibit "B"), except as otherwise stated below:

A. That the maximum building height for the hotel shall not exceed 61 feet as defined in the Zoning Code.

B. That signage on the property shall be limited to two (2) 48 square foot ground signs and three (3) wall signs.

C. That the landscaping shall conform to the Landscaping Ordinance, and all live materials shall be irrigated and kept in a healthy, growing condition.

D. That the dumpster screen shall be brick with a minimum height of five (5) feet.

E. That a fence on the west property line shall be wood with brick columns and a minimum height of six (6) feet.

F. That a minimum of 155 parking spaces shall be provided either on site or on the adjacent lot.

SECTION THREE. That the definitions given in the zoning regulations contained in the City Code of the City of Midland, Texas, shall be applicable to such of those terms as are used herein.

SECTION FOUR. The provisions of this ordinance are to be cumulative of all other ordinances or parts of ordinances governing or regulating the same subject matter as that covered herein; provided, however, that all prior ordinances or parts of ordinances inconsistent with or in conflict with any of the provisions of this ordinance are hereby expressly repealed to the extent of any such inconsistency or conflict.

SECTION FIVE. If any section, subsection, sentence, clause or phrase of this ordinance is, for any reason, held to be unconstitutional or invalid, such holding shall not affect the validity of the remaining portions of this ordinance. The Council of the City of Midland hereby declares that it would have passed this ordinance and each section, subsection, sentence, clause, or phrase hereof irrespective of the fact that any one or more sections, subsections, sentences, clauses, or phrases be declared unconstitutional or invalid.

SECTION SIX. The penalty for violation of this ordinance shall be in accordance with the general penalty provisions contained in Section 1-3-1 of the City Code of Midland, Texas, which provides for a fine not exceeding two thousand dollars ($2,000.00).

SECTION SEVEN. The City Secretary is hereby authorized and directed to publish the descriptive caption of this ordinance in the manner and for the length of time prescribed by the law as an alternative method of publication.

The above and foregoing ordinance was duly proposed, read in full and adopted on first reading, the 22nd day of November, A.D., 2005; and passed to second reading on motion of Council member Hailey, seconded by Council member Morgan, by the following vote:

Council members voting "AYE": Hailey, Morgan, Perry, Dingus, Canon, Simpson and Dufford

Council members voting "NAY": None

The above and foregoing ordinance was read in full and finally adopted by the following vote upon motion of Council member Morgan, seconded by Council member Dufford, on the 13th day of December, A.D., 2005, at a regular meeting of the City Council:

Council members voting "AYE": Morgan, Dufford, Perry, Dingus, Canon, Simpson and Hailey

Council members voting "NAY": None

PASSED AND APPROVED THIS 13th day of December, A.D., 2005.

Michael J. Canon, Mayor

ATTEST:

Kaylah J. McCord

Kaylah J. McCord, City Secretary

APPROVED AS TO FORM:

Keith Stretcher, City Attorney

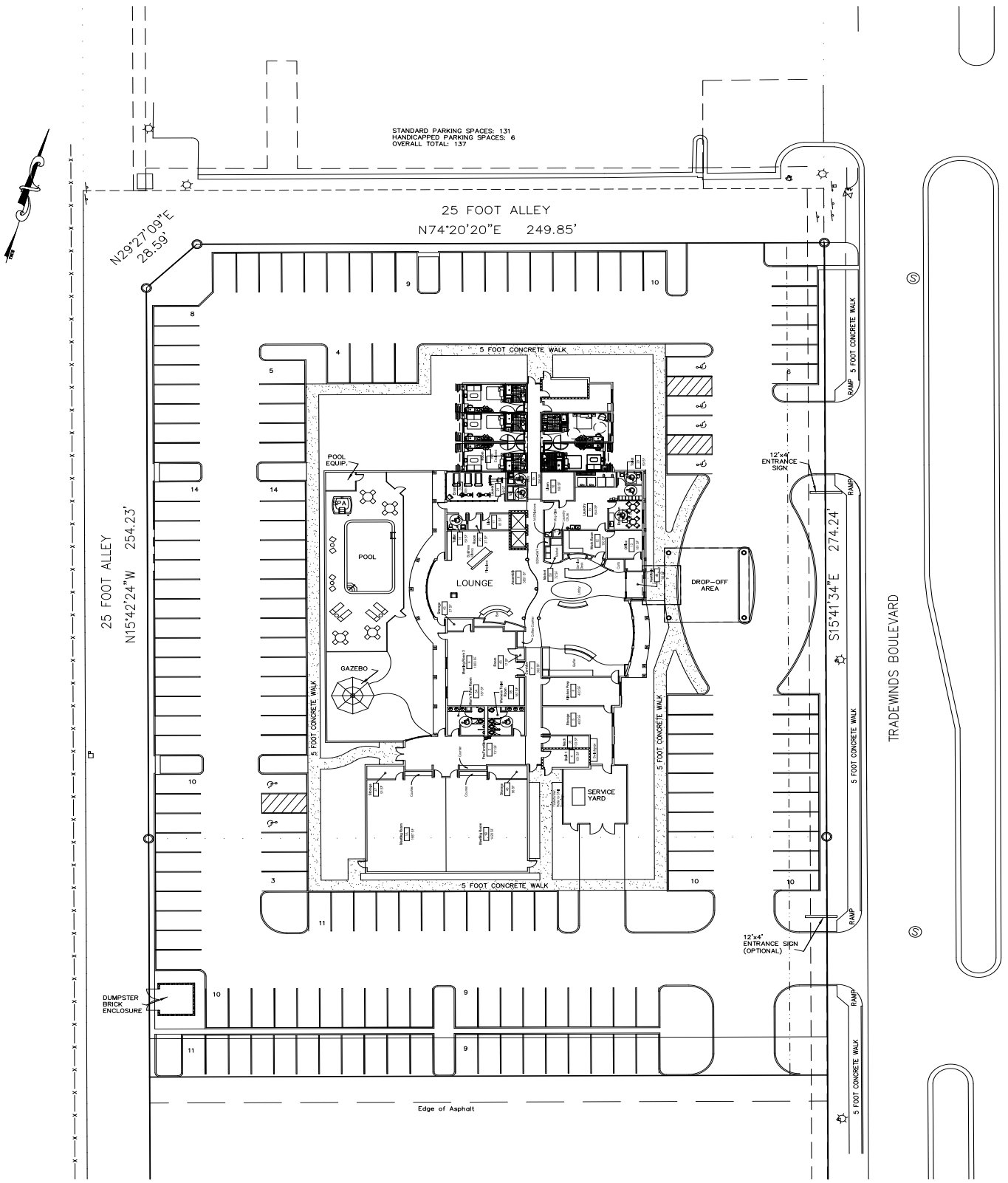

WESTRIDGE PARK ADDITION
SECTION 5
MIDLAND, TEXAS

PROJ. NO. 68927PH
DATE 11/09/05
DESIGNED CRUISE B. SUDDUTH
DRAWN BY KEVIN STARNES
JOB # 68,927
SHEET 1 OF 1

408 N. PECOS STREET
P. O. BOX 504
MIDLAND, TEXAS 79702
PH. (432)684-5548
FAX (432)684-6973
E-MAIL schuengr@aol.com

SCHUMANN ENGINEERING CO., INC.-CIVIL ENGINEERS\LAND SURVEYORS
PLANNING • BOUNDARY • TOPOGRAPHY • WELL LOCATIONS • PIPELINES

REV	DATE		DSN	DWN	CHK

THIS DRAWING SHALL NOT BE UTILIZED BY ANY PERSON, FIRM, OR CORPORATION IN WHOLE OR IN PART WITHOUT THE SPECIFIC PERMISSION OF SCHUMANN ENGINEERING CO., INC.

4 East Elevation
Scale: 1/16" = 1'-0"

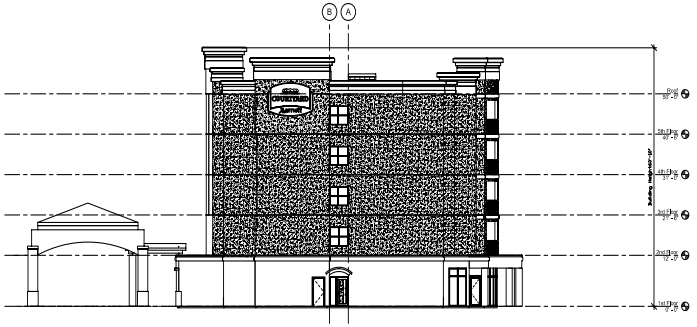

2 North Elevation
Scale: 1/16" = 1'-0"

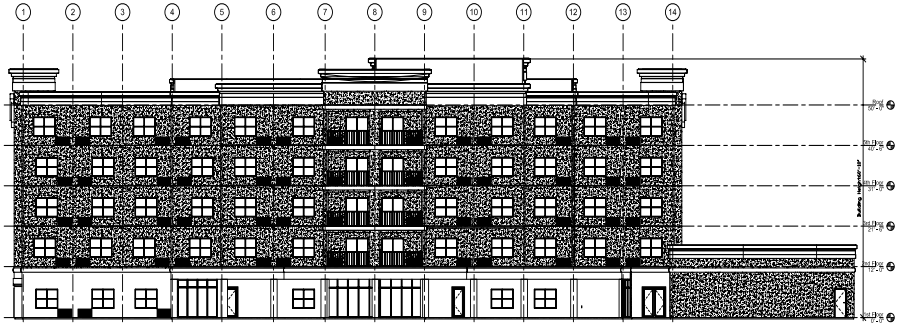

3 West Elevation
Scale: 1/16" = 1'-0"

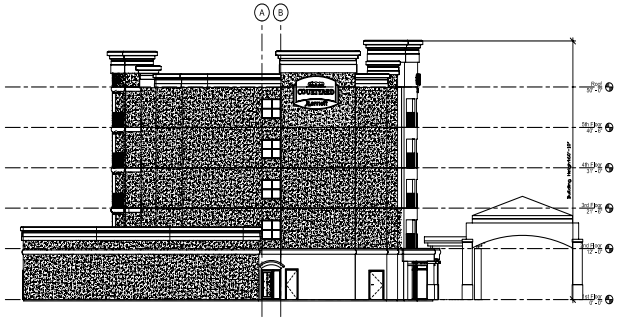

1 South Elevation
Scale: 1/16" = 1'-0"

16.21

3di architects
91 North Forest, Williamsville, New York 14221
Phone: 716.635.8170 Fax: 716.635.8171
Email: 3di@3diarchitects.com
www.3diarchitects.com

Preliminary
Not for Construction
11 - 09 - 05

Rev. No.	Date	Description

Architect of Record

Errors may occur in the transmission of electronic files. 3di Architects are not responsible for any claims, damages or expenses arising out of the unauthorized use of the information contained in electronic files.

Electronic files may not accurately reflect the final as-built conditions. It is the responsibility of the user to verify all layouts, dimensions and other related information.

This document may not be used or copied without prior written consent.

Owner:
Platinum Hospitality

Project Name:
Courtyard by Marriott
Midland, TX

Sheet Title:
Exterior Elevations

Drawn By:	Project Date:	Sheet No.:
WAS MPD AJD	-	A300

Project No.:
05100

3di architects
91 North Forest, Williamsville, New York 14221
Phone: 716.635.6170 Fax: 716.635.6171
Email: 3di@3diarchitects.com
www.3diarchitects.com

Rev. No.	Date	Description

Errors may occur in the transmission of electronic files. 3di Architects are not responsible for any claims, damages or expenses arising out of the unauthorized use of the information contained in electronic files.

Electronic files may not accurately reflect the final as-built conditions. It is the responsibility of the user to verify all layouts, dimensions and other related information.

This document may not be used or copied without prior written consent.

Project Logo:

Project Name:

Courtyard by Marriott

Midland, TX

Sheet Title:

Front Elevation Rendering

Drawn By:	Project Date:	Sheet No.
Project No.: 05100		AR-100

16.22

COURTYARD
Marriott

16.24

PENSKE
16.25

COURTYARD
Marriott
1505
FIRE LANE NO PARKING

City Council Agenda

Approved for Agenda:
rwpatrick
City Manager's Office

MEETING DATE: 4/28/2020

TO: City Council / City Manager

FROM: Glenda Arroyo-Cruz, Planner

SUBJECT: Hold a public hearing and consider an ordinance on a request by Elvira Garcia for a zone change from RR, Regional Retail District, to SF-3, Single-Family Dwelling District, on Lots 13 and 14, Block 145, Southern Addition, City and County of Midland, Texas. (Generally located on the east side of South Baird Street, approximately 110-feet north of East Pennsylvania Avenue. Council District 2)

Purpose:

The applicant, Elvira Garcia, is requesting approval of a zone change for the development of a single-family residential home.

Recommended City Council Action

☒ Approve ☐ Deny ☐ Directional / Informational

Fiscal Impact:

This proposal does not have a significant financial impact to the city.

Discussion:

The properties to the north are zoned C, Commercial District and the location of residential homes. The properties to the east are zoned SF-3, Single-Family Dwelling District and the location of residential homes. The properties to the south and west are zoned RR, Regional Retail District and the location of residential homes.

Analysis:

The property is located at 607 South Baird Street and is currently vacant. The applicant is proposing the development of a single-family residential home on this lot. The current zoning of this property is RR, Regional Retail District. Per the previous zoning ordinance,

single-family detached dwellings were allowed within this zoning district. As of July 1, 2019, the new zoning ordinance does not allow the use of single-family detached dwellings within the RR, Regional Retail District.

The planning department has researched the surrounding neighborhood and based on the existing characteristics of the area, the zone change request to allow for a single-family detached dwelling would be appropriate. The closest single-family residential zoning near this property is on the east side, directly adjacent.

In addition to having the appropriate zoning for the development, the property meets the minimum lot requirements. The appropriate setbacks and maximum height must also be met as described in the SF-3, Single-Family Dwelling District Dimensional Regulations chart.

This proposed zone change has been circulated to and reviewed by respective City departments and their comments, conditions, and requirements are as follows:

Engineering: (Approved)

No objection to zone change.

Site drainage, utilities, driveway access, and traffic circulation may be adjusted during construction drawing review as necessary to receive building permit approval from Engineering and Traffic Operations.

Fire: (Approved)

No objections.

Building: (Approved)

No issues. All future structures must adhere to the 2018 International Building Codes, the 2015 International Energy Code, the 2017 NEC requirements, the 2015 International Fire Codes, local city ordinances, zoning requirements, established setbacks, and floodplain requirements if necessary.

Code Compliance: (Approved)

No Oil or Gas wells identified within 500 ft. permitted well radius or in the 135 ft. non-permitted well radius of location on plat.

Transportation: (Approved)

Site drainage, utilities, driveway access, and traffic circulation may be adjusted during construction drawing review as necessary to receive building permit approval from Engineering and Traffic Operations.

No objection to zone change.

Planning:

Per the Future Land Use map, this location is designated as Urban Medium - Neighborhood Center. Potential zoning for this area includes Single-Family Dwelling Districts; therefore, this zone change is in compliance with the Future Land Use plan. It would also support the existing neighborhood characteristics and uses of the area.

This request was recommended for approval at the April 6, 2020 Planning and Zoning meeting.

Staff recommends approval of this request for a zone change subject to condition A.

Conditions:

A. **That the use and development of this property shall conform to the regulations of the SF-3, Single-Family Dwelling District.**

Letters of Objection:

As of April 22, 2020, staff has not received any letters of objection.

Attachments:

Application
Maps

ORDINANCE NO. _____

AN ORDINANCE AMENDING THE ZONING DISTRICT MAP OF THE CITY OF MIDLAND TO REZONE LOTS 13 AND 14, BLOCK 145, SOUTHERN ADDITION, CITY AND COUNTY OF MIDLAND, TEXAS, FROM RR, REGIONAL RETAIL DISTRICT TO SF-3, SINGLE-FAMILY DWELLING DISTRICT (GENERALLY LOCATED ON THE EAST SIDE OF SOUTH BAIRD STREET, APPROXIMATELY 110 FEET NORTH OF EAST PENNSYLVANIA AVENUE); CONTAINING A CUMULATIVE CLAUSE; CONTAINING A SAVINGS AND SEVERABILITY CLAUSE; PROVIDING FOR A MAXIMUM PENALTY OR FINE OF TWO THOUSAND DOLLARS ($2,000.00); AND ORDERING PUBLICATION

WHEREAS, the City Planning and Zoning Commission and the Governing Body of the City of Midland, in compliance with the City Charter, the City Code, and State law, have given the requisite notices by United States mail, publication and otherwise; and after a full and fair hearing to all of the property owners generally and particularly to those interested persons situated in the affected area and in the vicinity thereof, the Governing Body finds that the public health, safety and general welfare will be best served by rezoning Lots 13 and 14, Block 145, Southern Addition, City and County of Midland, Texas (the "Property") to SF-3, Single-Family Dwelling District, as set out hereinafter;

NOW, THEREFORE, BE IT ORDAINED BY THE CITY COUNCIL OF THE CITY OF MIDLAND, TEXAS:

SECTION ONE. That the Zoning District Map of the City of Midland, Texas, is hereby amended to rezone the Property from RR, Regional Retail District to SF-3, Single-Family Dwelling District.

SECTION TWO. That the definitions given in the zoning regulations contained in the City Code of the City of Midland, Texas, shall be applicable to such of those terms as are used herein.

SECTION THREE. The provisions of this ordinance are to be cumulative of all other ordinances or parts of ordinances governing or regulating the same subject matter as

that covered herein; provided, however, that all prior ordinances or parts of ordinances inconsistent with or in conflict with any of the provisions of this ordinance are hereby expressly repealed to the extent of any such inconsistency or conflict.

SECTION FOUR. If any section, subsection, sentence, clause or phrase of this ordinance is, for any reason, held to be unconstitutional or invalid, such holding shall not affect the validity of the remaining portions of this ordinance. The Council of the City of Midland hereby declares that it would have passed this ordinance and each section, subsection, sentence, clause, or phrase hereof irrespective of the fact that any one or more sections, subsections, sentences, clauses, or phrases be declared unconstitutional or invalid.

SECTION FIVE. The penalty for violation of this ordinance shall be in accordance with the general penalty provisions contained in Section 1-3-1 of the City Code of Midland, Texas, which provides for a fine not exceeding two thousand dollars ($2,000.00).

SECTION SIX. The City Secretary is hereby authorized and directed to publish the descriptive caption of this ordinance in the manner and for the length of time prescribed by the law as an alternative method of publication.

The above and foregoing ordinance was duly proposed, read in full and adopted on first reading, the _____ day of _____, A.D., 2020; and passed to second reading on motion of Council member _____, seconded by Council member _____, by the following vote:

Council members voting "AYE":

Council members voting "NAY":

The above and foregoing ordinance was read in full and finally adopted by the following vote upon motion of Council member _____, seconded by Council member _____, on the _____ day of _____, A.D., 2020, at a regular meeting of the City Council:

Council members voting "AYE":

Council members voting "NAY":

PASSED AND APPROVED THIS _____ day of _____, A.D., 2020.

_____
Patrick N. Payton, Mayor

ATTEST:

_____
Amy M. Turner, City Secretary

APPROVED AS TO CONTENT
AND COMPLETENESS:

_____
Robert Patrick, Assistant City Manager

_____
Charles Harrington, Director of Development Services

APPROVED ONLY AS TO FORM:

_____
John Ohnemiller, City Attorney

MIDLAND Planning Division

Zone Change/Planned District Amendment/Site Plan Approval

Project Number: Z-19-0162

Case Number:

Applicant *(if acting as Agent, see affidavit on page 2)*
Printed Name: Elvira Garcia – Power Framers Construction
Phone (432) 661-1513
Email Powerco3060@gmail.com
Address 1500 Rolling Meadows | City Wellington | State FL | Zip 33414

Property Owner
Printed Name: Elvira Garcia – Power Framers Construction
Phone (432) 661-1513
Email
Address 1500 Rolling Meadows | City Wellington | State FL | Zip 33414

Representative *(if different from Applicant or Property Owner)*
Firm:
Printed Name:
Address | City | State | Zip
Phone ( )
Email

Street Address: 607 S. Baird

Legal Description
Lot: 13+14 Block: 145 Subdivision: Southern Addition

Current Zoning: Regional Retail
Proposed Zone: SF
(List by tracts if more than one district is requested)

Reason for Zone Change Request: We want to build a single family home

Present Use of Property: Vacant lot

Proposed Use of Property: Construction of a house

How would this zone change affect the public health, safety and welfare? This will not affect anything there is already homes around area.

Describe how conditions affecting the property have changed since present zoning designation: We have been trying to buy this lot for several years and in July 2019 the city changed the zoning.

Submittal and Fees
Items to be submitted with this application form:
- Application Fee – Payable to the 'City of Midland'
- Dimensioned Site Plan
- Digital Copies of Site Plan (PDF/JPEG)

RECEIVED
DEC 18 2019
CITY OF MIDLAND
PLANNING DIVISION OFFICE

Signature *(by property owner only – authorized agent must sign affidavit below)*

Applicant (signature): [signature] Date: 12/18/19

Applicant (printed): Elvira Garcia Date: 12/18/19

Property Owner (signature):

Property Owner (printed) :

The Zone Change/Planned District Amendment/Site Plan Approval shall be considered officially received in the Planning office only when it has been submitted in full compliance with the provisions of Section 212 of the Texas Local Government Code and the Zoning Code of Ordinances of the City of Midland and when such required items for the application are also received.

All materials, including exhibits, submitted in support of an application, or displayed during a public hearing, shall remain the property of the City of Midland.

STATE OF TEXAS
COUNTY OF MIDLAND

Before me, the undersigned authority, on this day personally appeared Elvira Garcia who, being by me duly sworn, upon oath says: That (s)he is the owner of 607 S. Baird or authorized by _____, the owner of the above described property, to fully represent him/her in this application and that (s)he had the legal right, power and authority to sign said owner's name hereto as his/her attorney in fact.

NOTARY PUBLIC STATE OF FLORIDA
JENNIFER GARCIA
MY COMMISSION # GG 335328
EXPIRES: May 15, 2023
Bonded Thru Notary Public Underwriters

[signature]
Authorized Agent (signature)

Subscribed and sworn to before me, this 24 day of March, 2020 to certify which witness my hand and seal of office.

[signature]
NOTARY PUBLIC, MIDLAND COUNTY, TEXAS

FOR OFFICE USE ONLY

- [x] Property Owner Authorization
- [ ] Application Fee
- Check # waived
- Received By: [signature]
- [x] Dimensioned Site Plan
- [ ] Plans in Digital Format (PDF/JPEG)
- Date:

RECEIVED
DEC 18 2019
CITY OF MIDLAND
PLANNING DIVISION OFFICE

****Application will not be considered for scheduling until reviewed by a planner.****

stewart title

Real partners. Real possibilities.

October 3, 2019

Power Framers Construction LLC
15600 Rolling Meadows Circle
Wellington, FL 33414

File No.:	530819
Seller:	Domingo Ortega Sr. and Rafaela Reyes Ortega
Buyer/Borrower:	Power Framers Construction LLC
Lender:	
Property Address:	607 S Baird Street, Midland, TX 79701

In connection with the above referenced transaction, enclosed herewith, please find the following:

Your original recorded document(s) to keep for your records.

1. Warranty Deed

If you should have any questions or need further assistance, please do not hesitate to contact the undersigned. Thank you.

Sincerely,

Ken Stover
Post Closing Specialist

Encl.

Stewart Title Company
206 North Main
Midland, TX 79701
(432) 687-3355 main (432) 687-3358 fax
lQuiroz@stewart.com

Midland County
Alison Haley
Midland County
Clerk

Instrument Number: 29908

eRecording - Real Property

Recorded On: September 27, 2019 10:12 AM

Number of Pages: 2

" Examined and Charged as Follows: "

Total Recording: $26.00

********** THIS PAGE IS PART OF THE INSTRUMENT **********
Any provision herein which restricts the Sale, Rental or use of the described REAL PROPERTY because of color or race is invalid and unenforceable under federal law.

File Information:

Document Number:	29908
Receipt Number:	20190927000034
Recorded Date/Time:	September 27, 2019 10:12 AM
User:	Amanda D
Station:	cc10299

Record and Return To:

ERX

STATE OF TEXAS
COUNTY OF MIDLAND

I hereby certify that this Instrument was FILED **In the File Number sequence on the date/time printed hereon, and was duly** RECORDED **In the Official Records of Midland County, Texas.**

Alison Haley
Midland County Clerk
Midland County, TX

Alison Haley

NOTICE OF CONFIDENTIALITY RIGHTS: IF YOU ARE A NATURAL PERSON, YOU MAY REMOVE OR STRIKE ANY OF THE FOLLOWING INFORMATION FROM ANY INSTRUMENT THAT TRANSFERS AN INTEREST IN REAL PROPERTY BEFORE IT IS FILED FOR RECORD IN THE PUBLIC RECORDS: YOUR SOCIAL SECURITY NUMBER OR YOUR DRIVER'S LICENSE NUMBER

WARRANTY DEED

THE STATE OF TEXAS §
§ KNOW ALL MEN BY THESE PRESENTS:
COUNTY OF MIDLAND §

That **DOMINGO ORTEGA DIAZ AND RAFAELA REYES ORTEGA** (whether one or more hereinafter referred to as "Grantor") for and in consideration of $10.00 and other good and valuable consideration, has GRANTED, SOLD and CONVEYED, and by these presents does GRANT, SELL, and CONVEY unto **POWER FRAMERS CONSTRUCTION, LLC** (whether one or more, hereinafter referred to as "Grantee"), whose mailing address is **15600 ROLLING MEADOWS CIRCLE, WELLINGTON, FL 33414** all of that certain lot, tract or parcel of land situated in Midland County, Texas, and described as follows, to-wit:

Lots 13 and 14, Block 145, Southern Addition, an addition to the City of Midland, Midland County, Texas, according to the map or plat thereof of record in Volume 2, Page 2, Deed Records, Midland County, Texas.

SAVE AND EXCEPT For Grantor and Grantor's heirs, successors, and assigns forever, there is a reservation of all oil, gas, and other minerals in and under and that may be produced from the Property. If the mineral estate is subject to existing production or an existing lease, this reservation includes the production, the lease, and all benefits from it.

SUBJECT TO and all oil and gas leases, easements, rights-of-way, and covenants and restrictions of record in the Office of the County Clerk of Midland County, Texas.

STV-530819

TO HAVE AND TO HOLD the above described premises, together with all and singular the rights and appurtenances thereto in anywise belonging unto the Grantee, Grantee's heirs, executors, administrators, successors and assigns forever, and Grantor does hereby bind Grantor, Grantor's heirs, executors, administrators, successors and assigns, to Warrant and Forever Defend, all and singular the said premises unto the said Grantee, Grantee's heirs, executors, administrators, successors and assigns, against every person whomsoever lawfully claiming, or to claim the same, or any part thereof.

Dated: 9/21/19

Domingo E. Ortega
DOMINGO ORTEGA DIAZ

RAFAELA REYES ORTEGA

California

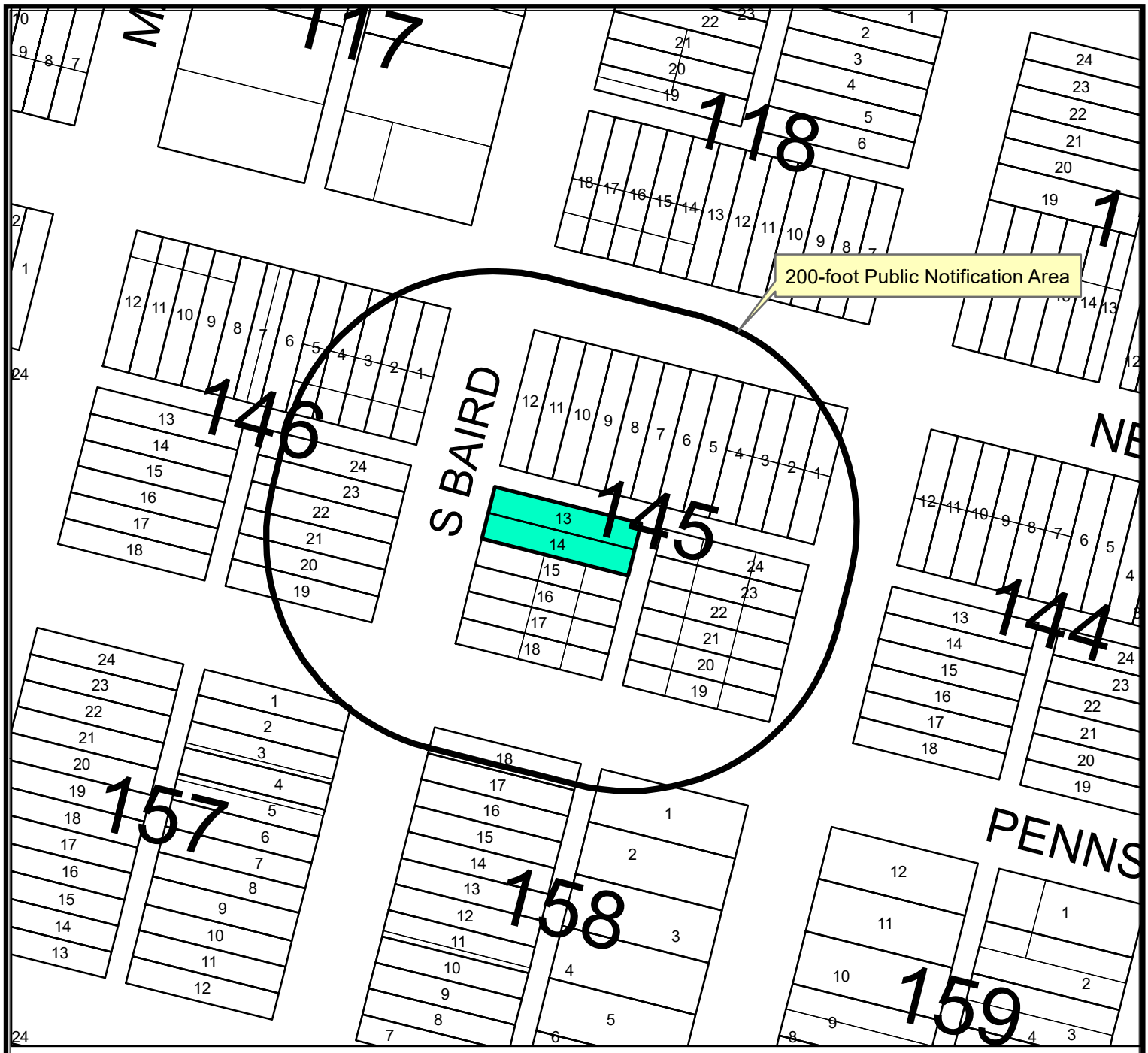

LOCATION MAP

Z-19-0162 **Scale: 1" = 400'**

Consider a request by Elvira Garcia for a zone change from RR, Regional Retail District, to SF-3, Single-Family Dwelling District, on Lots 13 and 14, Block 145, Southern Addition, City and County of Midland, Texas.

Generally located on the east side of South Baird Street, approximately 110-feet north of East Pennsylvania Avenue. (Council District 2)

LEGEND

- CITY LIMITS
- PARCEL
- PRIVATE BLDGS

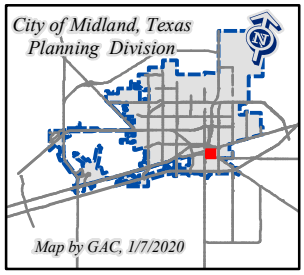

©THE CITY OF MIDLAND - 2019
THIS DATA IS NOT A SUBSTITUTION FOR A SURVEY PRODUCT, NOR IS IT DESIGNED TO BE USED AS A PRIMARY TOOL IN PERMITTING OR OTHER DECISIONS BASED SOLELY ON THE INFORMATION CONTAINED HEREIN.
THE CITY OF MIDLAND SHALL NOT BE RESPONSIBLE I ANY DECISIONS BASED UPON THE USE OF THIS DAT

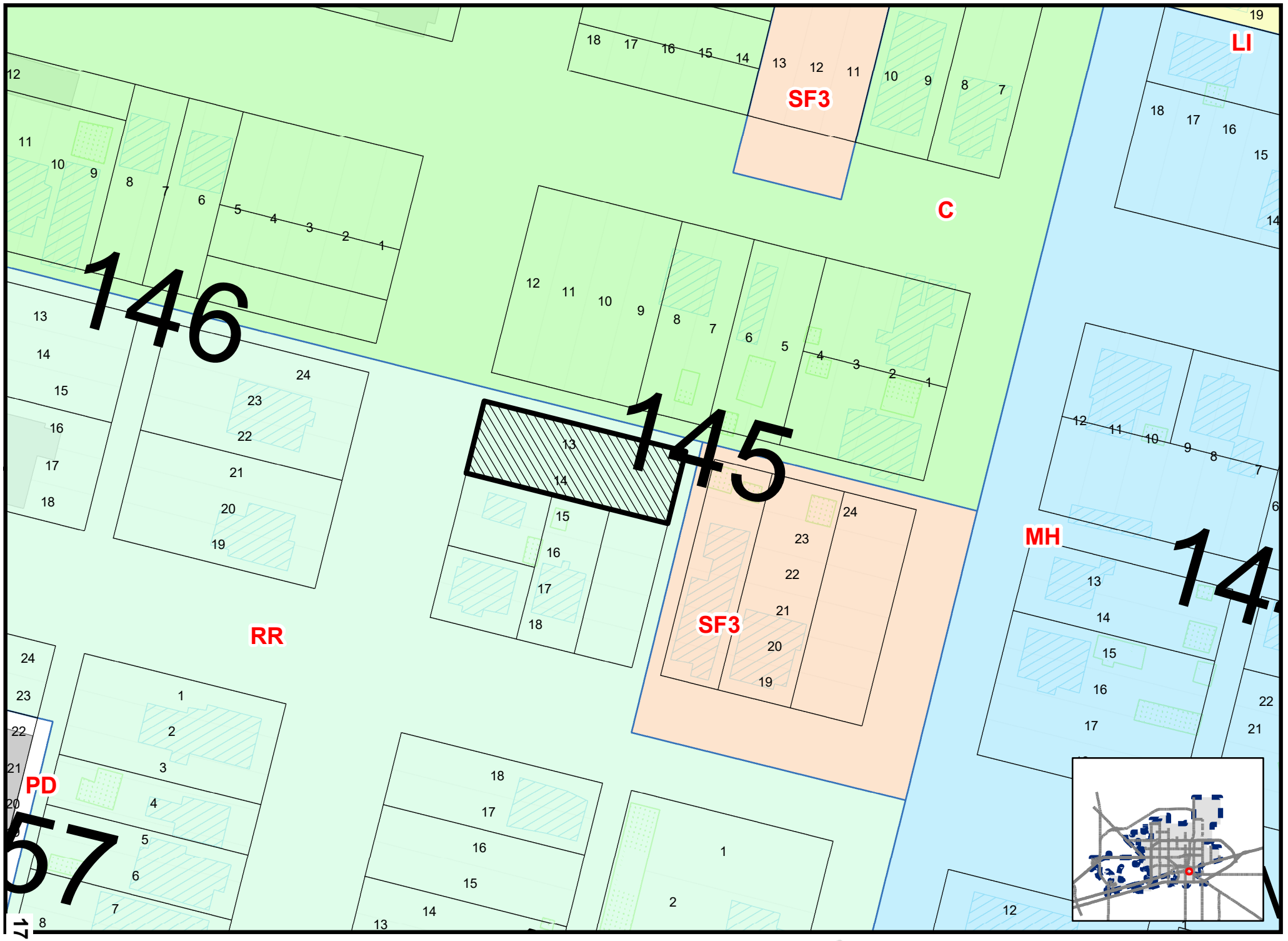

Map By GAC, 01/7/2020

Z-19-0162

Scale: 1" = 200'

ZONING MAP

© THE CITY OF MIDLAND - 2019: THIS DATA IS NOT A SUBSTITUTION FOR A SURVEY PRODUCT, NOR IS IT DESIGNED TO BE USED AS A PRIMARY TOOL IN PERMITTING OR OTHER DECISIONS BASED SOLELY ON THE INFORMATION CONTAINED HEREIN. THE CITY OF MIDLAND SHALL NOT BE RESPONSIBLE FOR ANY DECISIONS BASED UPON THE USE OF THIS DATA.

STOP

17.15

17.16

U.S.
MAIL

City Council Agenda

Approved for Agenda:
rwpatrick
City Manager's Office

MEETING DATE: 4/28/2020

TO: City Council / City Manager

FROM: Glenda Arroyo-Cruz, Planner

SUBJECT: Hold a public hearing and consider an ordinance on a request by Maverick Engineering for a zone change from PD, Planned District for a Housing Development to an amended PD, Planned Development District for a Housing Development on Lots 19 through 31, Block 5; Lots 1 through 16, Block 8; Lots 1 through 9, Block 9; and Lots 1 through 4, Block 10; all out of Quail Ridge Addition, Section 6, Lots 10 through 20, Block 9; Lots 5 through 18, Block 10; and Lots 1 through 14, Block 11; all out of Quail Ridge Addition, Section 7; a 7.432-acre portion of Lot 1, Block 1, Quail Ridge Addition; and a previously vacated 0.004 acre portion of Beachwood Street right-of-way, Quail Ridge Addition, Section 2; City and County of Midland, Texas. (Generally located on the northwest corner of the intersection of Chukar Lane and Beachwood Street. Council District 2)

Purpose:

The applicant, Maverick Engineering, is requesting approval of a zone change to continue the re-platting process for this residential development.

Recommended City Council Action

☒ Approve ☐ Deny ☐ Directional / Informational

Fiscal Impact:

This proposal does not have a significant financial impact to the city.

Discussion:

The properties to the north and east are zoned AE, Agriculture Estate District and the location of residential homes. The properties to the south are zoned PD, Planned District for a housing development and the location of residential homes. The property to the west is zoned TP, Technology Park District and the location of a public park.

Analysis:

The property is generally located on the northwest corner of the intersection of Chukar Lane and Beachwood Street. The applicant is requesting to amend the current planned district to adopt a new site plan for this residential subdivision. The new subdivision will not include the southern portion of the adopted exhibit, which is known as Quail Ridge Addition, Section 2, and will only focus on the northern portion of the area. This Planned District was established June of 2007 with an underlying zoning of 1F-3, One-Family Dwelling District. The equivalency of the previous zoning district is SF-3, Single-Family Dwelling District as listed in the new Zoning Ordinance.

This property is regulated by Ordinance No. 8536 and as stated in the *special conditions and restrictions, Section 2, Condition:*

1. *That the development of the property described in Section One hereof shall strictly conform to the conditions shown on the site plan marked as Exhibit "A", which is attached hereto and incorporated herein for all purposes.*

The applicant has provided a new site plan, attached hereto as "Exhibit A", which shows a revised lot layout for the next phases of the subdivision. The site will now have 115 lots, whereas, the previous site plan proposed 125. Lots 1 and 16 of Block 8 previously showed a common area. The new site plan is proposing to use this area as lots for residential development.

The site plan also indicates a new minimum front yard setback of 25 feet from the property line to the face of the finished out garage. All lots within this subdivision will also have a 10-foot utility easement along all public frontages.

All trash is being proposed to be picked up in front of the streets and no alleys are being shown in this subdivision. Additionally, all fencing will be a 6-foot wooden fence.

This proposed zone change has been circulated to and reviewed by respective City departments and their comments, conditions, and requirements are as follows:

Engineering: (Approved)

No objection to zone change.

Site drainage, utilities, driveway access, and traffic circulation may be adjusted during construction drawing review as necessary to receive building permit approval from Engineering and Traffic Operations.

Fire: (Approved)

No objections.

Building: (Approved)

No issues. All future structures must adhere to the 2018 International Building Codes, the 2015 International Energy Code, the 2017 NEC requirements, the 2015 International Fire Codes, local city ordinances, zoning requirements, established setbacks, and floodplain requirements if necessary.

Code Compliance: (Approved)

No Oil or Gas wells identified within 500 ft. permitted well radius or in the 135 ft. non-permitted well

radius of location on plat.

Transportation: (Approved)

Site drainage, utilities, driveway access, and traffic circulation may be adjusted during construction drawing review as necessary to receive building permit approval from Engineering and Traffic Operations.

No objection to zone change.

Planning:

Per the future land use map, this area is designated as U-M, Urban Medium. Potential zoning for this area allows for Single-Family Dwelling Districts. This request is compatibility with the existing development in the neighborhood and allow for additional housing options for the community.

This request was recommended for approval at the April 6, 2020 Planning and Zoning meeting.

Staff recommends approval of this request for a zone change subject to following conditions:

Conditions:

A. **That the use and development of this property shall conform to the regulations of the SF-3, Single-Family Dwelling District.**

B. **That the development of this property shall significantly conform to the site plan attached hereto and incorporated herein as Exhibit "C".**

C. **That the minimum front-yard setback shall be twenty-five (25) feet.**

Letters of Objection:

As of April 22, 2020, staff has not received any letters of objection.

Attachments:

Metes and Bounds (Exhibit A)
Metes and Bounds for Vacation (Exhibit B)
Quail Ridge Subdivision Site Plan (Exhibit C)
Quail Ridge, Section 8 Proposed Plat
Application
Maps
Ordinance No. 8536

ORDINANCE NO. _____

AN ORDINANCE AMENDING THE ZONING DISTRICT MAP OF THE CITY OF MIDLAND TO REZONE LOTS 19 THROUGH 31, BLOCK 5, LOTS 1 THROUGH 16, BLOCK 8, LOTS 1 THROUGH 9, BLOCK 9, AND LOTS 1 THROUGH 4, BLOCK 10, QUAIL RIDGE ADDITION, SECTION 6, LOTS 10 THROUGH 20, BLOCK 9, LOTS 5 THROUGH 18, BLOCK 10, AND LOTS 1 THROUGH 14, BLOCK 11, QUAIL RIDGE ADDITION, SECTION 7, A 7.432-ACRE TRACT OF LAND OUT OF LOT 1, BLOCK 1, QUAIL RIDGE ADDITION, AND A 0.004-ACRE TRACT OF LAND OUT OF QUAIL RIDGE ADDITION, SECTION 2, CITY AND COUNTY OF MIDLAND, TEXAS, FROM PD, PLANNED DEVELOPMENT DISTRICT FOR A HOUSING DEVELOPMENT TO AN AMENDED PD, PLANNED DEVELOPMENT DISTRICT FOR A HOUSING DEVELOPMENT (GENERALLY LOCATED AT THE NORTHWEST CORNER OF THE INTERSECTION OF CHUKAR LANE AND BEACHWOOD STREET); CONTAINING A CUMULATIVE CLAUSE; CONTAINING A SAVINGS AND SEVERABILITY CLAUSE; PROVIDING FOR A MAXIMUM PENALTY OR FINE OF TWO THOUSAND DOLLARS ($2,000.00); AND ORDERING PUBLICATION

WHEREAS, the City Planning and Zoning Commission and the Governing Body of the City of Midland, in compliance with the City Charter, the City Code, and State law, have given the requisite notices by United States mail, publication and otherwise; and after a full and fair hearing to all of the property owners generally and particularly to those interested persons situated in the affected area and in the vicinity thereof, the Governing Body finds that the public health, safety and general welfare will be best served by rezoning Lots 19 through 31, Block 5, Lots 1 through 16, Block 8, Lots 1 through 9, Block 9, and Lots 1 through 4, Block 10, Quail Ridge Addition, Section 6, Lots 10 through 20, Block 9, Lots 5 through 18, Block 10, and Lots 1 through 14, Block 11, Quail Ridge Addition, Section 7, a 7.432-acre tract of land out of Lot 1, Block 1, Quail Ridge Addition ("Tract A"), and a 0.004-acre tract of land out of Quail Ridge Addition, Section 2 ("Tract B"), City and County of Midland, Texas (the "Property"), Tract A and Tract B being more specifically described by metes and bounds in Exhibits "A" and "B", which are attached hereto and incorporated herein, to an amended PD, Planned Development District for a Housing Development and

adopting a site plan therefor, as set out hereinafter;

NOW, THEREFORE, BE IT ORDAINED BY THE CITY COUNCIL OF THE CITY OF MIDLAND, TEXAS:

SECTION ONE. That the Zoning District Map of the City of Midland, Texas, is hereby amended to rezone the Property from PD, Planned Development District for a Housing Development to an amended PD, Planned Development District for a Housing Development .

SECTION TWO. That the base zoning district to which the use and development of the Property shall conform, except as modified by Section Three of this ordinance, is the SF-3, Single-Family Dwelling District.

SECTION THREE. That a site plan, which is attached hereto as Exhibit "C" and incorporated herein for all purposes, is hereby adopted, and the use and development of the Property shall be subject to the following conditions and restrictions:

A. That the development of the Property shall significantly conform to the site plan attached hereto as Exhibit "C".

B. That the minimum front yard setback shall be 25 feet.

SECTION FOUR. That the definitions given in the zoning regulations contained in the City Code of the City of Midland, Texas, shall be applicable to such of those terms as are used herein.

SECTION FIVE. The provisions of this ordinance are to be cumulative of all other ordinances or parts of ordinances governing or regulating the same subject matter as that covered herein; provided, however, that all prior ordinances or parts of ordinances inconsistent with or in conflict with any of the provisions of this ordinance are hereby expressly repealed to the extent of any such inconsistency or conflict.

SECTION SIX. If any section, subsection, sentence, clause or phrase of this ordinance is, for any reason, held to be unconstitutional or invalid, such holding shall not

affect the validity of the remaining portions of this ordinance. The Council of the City of Midland hereby declares that it would have passed this ordinance and each section, subsection, sentence, clause, or phrase hereof irrespective of the fact that any one or more sections, subsections, sentences, clauses, or phrases be declared unconstitutional or invalid.

SECTION SEVEN. The penalty for violation of this ordinance shall be in accordance with the general penalty provisions contained in Section 1-3-1 of the City Code of Midland, Texas, which provides for a fine not exceeding two thousand dollars ($2,000.00).

SECTION EIGHT. The City Secretary is hereby authorized and directed to publish the descriptive caption of this ordinance in the manner and for the length of time prescribed by the law as an alternative method of publication.

The above and foregoing ordinance was duly proposed, read in full and adopted on first reading, the _____ day of _____, A.D., 2020; and passed to second reading on motion of Council member _____, seconded by Council member _____, by the following vote:

Council members voting "AYE":

Council members voting "NAY":

The above and foregoing ordinance was read in full and finally adopted by the following vote upon motion of Council member _____, seconded by Council member _____, on the _____ day of _____, A.D., 2020, at a regular meeting of the City Council:

Council members voting "AYE":

Council members voting "NAY":

PASSED AND APPROVED THIS _____ day of _____, A.D., 2020.

_____
Patrick N. Payton, Mayor

ATTEST:

_____
Amy M. Turner, City Secretary

APPROVED AS TO CONTENT
AND COMPLETENESS:

_____
Robert Patrick, Assistant City Manager

_____
Charles Harrington, Director of Development Services

APPROVED ONLY AS TO FORM:

_____
John Ohnemiller, City Attorney

EXHIBIT "A"

MAVERICK
ENGINEERING • SURVEY • WATER RESOURCES
1909 West Wall Street, Suite K • Midland, TX 79701
Tel: 432.262.0999 • Fax: 432.262.0989 • maverick-eng.com
ENGINEER FIRM #: F-15089 | SURVEY FIRM #: 10194514

Quail Ridge Addition, Section 8, a re-plat of portions of Quail Ridge Addition, Cab D Page 336, PRMCT, excluding a portion of Beachwood Street, a platted roadway out of Quail Ridge Addition, Section 2 Cab G Page 192

Commencing at a 1/2" IRF (N: 10,701,992.45, E: 1,766,248.13), NAD 83, Texas Central Zone) the Northwest Corner of Quail Ridge Addition, Section 6, Cabinet L, page 172, PRMCT;

Thence North 75°36'57" East 716.16 Feet along and with the North Line said Quail Ridge Addition, Section 6 and proposed Section 7 to a 1/2" IRF for the Northeast Corner of proposed Quail Ridge Addition, Section 7;

Thence South 37°13'05" East along and with the East line of said proposed Quail Ridge Addition, Section 7 (Seven), 218.89 Feet to a 1/2" IRS for the Northwest Corner and **Point of Beginning** of proposed Quail Ridge Addition, Section 8, Blocks 12 and 13:

Thence North 75°36'36" East 748.27 Feet to a 1/2" IRF for the Northeast Corner of this Survey;

Thence South 14°37'49" East along and with the West Right of Way of Chukar Lane 444.82 Feet to a 1/2" IRF for a Point of Curvature at the Southeast corner of Lot 18, on a Curve to the Right to the North Right of Way of Beachwood Street and the West Right of Way of Chukar Lane;

Thence South 30°56'58" West 28.18 Feet to a 1/2" IRS Cap FIRM 10194514 for a Point of Tangency on the South Line of Block 12;

Thence South 75°30'02" West 61.87 Feet to a 1/2" IRS Cap FIRM 10194514 for a Point of Tangency on the South Line of Block 12;

Thence North 59°26'42" West 28.25 Feet to a 1/2" IRS Cap FIRM 10194514 for a Point of Intersection on the South Line of Block 12;

Thence South 75°37'32" West 17.17 Feet to a 1/2" IRS Cap FIRM 10194514 for a Point of Intersection on the South Line of Block 12;

Thence, following a non-tangent curve to the right, with a radius of 20.00 Feet, a Delta Angle of 90°24'46", an arc length of 31.56 Feet, a Chord bearing South 30°17'42" West and a Chord Distance of 28.39 Feet to a 1/2" IRS Cap FIRM 10194514 for a Point of Intersection on the North Right of Way of Beachwood Avenue;

Thence North 75°30'02" West 217.23 Feet to a 1/2" IRS Cap FIRM 10194514 to a Point of Curvature on the South Line of Block 12;

Thence following a curve to the left, with a radius of 229.48, a Delta Angle of 22°27'28", an arc length of 89.95 Feet, a Chord Bearing South 64°15'34" West and a Chord Distance of 89.37 Feet to a 1/2" IRS Cap FIRM 10194514 for a Point of Tangency on the North Line of Beachwood Street;

Thence South 52°34'41" West 94.88 Feet to a 1/2" IRS Cap FIRM 10194514 for the Southwest Corner of Block 12;

Thence North 37°13’05” West 564.29 Feet to the **Point of Beginning** of Block 12 and this Survey;

And also, Section 8, Block 1, commencing at a ½” IRF at a Point of Curvature on the Southeast Corner of Lot 18, Block 12, on the West Right of Way of Chukar Lane;

Thence crossing platted Beachwood Street, South 14°32’16” East 72.12 Feet to a 1/2” IRS Cap FIRM 10194514 to the Point of Beginning of Block 1;

Thence South 14°31’58 66.73 Feet to a 1/2” IRS Cap FIRM 10194514 at the intersection of the West Right of Way of Chukar Lane at the Southeast Corner of Block 12, Lot 18, Quail Ridge Addition, Section 8;

Thence South 14°32’16” East 72.12 Feet to a 1/2” IRS Cap FIRM 10194514 for the South Right of Way of said Beachwood Street and a Point of Intersection in the East Line of this Survey for a **Point of Beginning** of Block 1 in this Survey;

Thence South 14°31’58” East along and with the West Right of Way of Chukar Lane, 66.73 Feet to a 1/2” IRS Cap FIRM 10194514 for the Southeast Corner of proposed Quail Ridge Addition, Section 8 Block 1;

Thence South 75°23’42” West 396.75 Feet to a 1/2” IRS Cap FIRM 10194514 for the Southwest Corner of Block 1;

Thence North 36°53’53” West 80.45 Feet to a 1/2” IRS Cap FIRM 10194514 for the Northwest Corner of Block 1 and the South Right of Way of said platted Beachwood Street,

Thence along a non-tangent curve to the right with a radius of 197.00 Feet, a Delta angle of 21°05’41”, an Arc length of 72.53 Feet, a Chord bearing North 64°57’17”, and a Chord Distance of 72.12 Feet to a 1/2” IRS Cap FIRM 10194514 for a Point of Intersection on the North Line of Block 1;

Thence North 75°30’02” East 336.39 Feet to a Point of Curvature of a Curve on the North Line of Block 1,

Thence following a Curve to the Right with a Radius of 20.00 Feet, a Delta Angle of 90°33’27”, an Arc Length of 31.61 Feet, a Chord Bearing South 59°25’59” and a Chord Distance of 28.42 Feet to the Point of Beginning of Block 1, the combined area of these two tracts containing ± 7.432 acres.

www.maverick-eng.com
Texas RPLS - No. 6135
Maverick Engineering (FIRM – No. 10194514)
1909 W. Wall St., Suite K
Midland, TX 79701
432-262-0999

03/18/2020

EXHIBIT "B"

0.004 ACRES - TRACT ONE

LEGAL DESCRIPTION: Being 0.004 acres of land out of Section 42, Block 38, T-1-S, T. & P. RR Co. Survey in Midland County, Texas and also being a portion Beachwood Street of the Quail Ridge Addition, Section 2 as shown on plat recorded in Cab G, Slide 192 of the Plat Records of Midland County, Texas; Said 0.004 acre tract being more particularly described as follows and as surveyed under the supervision of Cross Texas Land Services, Inc in March, 2018;

BEGINNING at a ½" iron rod with cap set for the southeast corner hereof and from which a ½" iron rod at a fence corner post found in the west line of Chuker Lane for the southeast corner of that certain 2.14 acre tract described in Doc. #2014-11212 of the Official Public Records of said Midland County, Texas and the northeast corner of that certain 43.656 acre tract described in Doc. #2012-26321 of said Official Public Records bears North 06°24'21" West a distance of 469.26 feet;

THENCE crossing said Beachwood Street, the following 2 courses:

1. South 75°30'02" West a distance of 14.87 feet to a calculated point for the southwest corner hereof;
2. North 59°26'42" West a distance of 28.25 feet to a calculated point in the north

EXHIBIT "C"

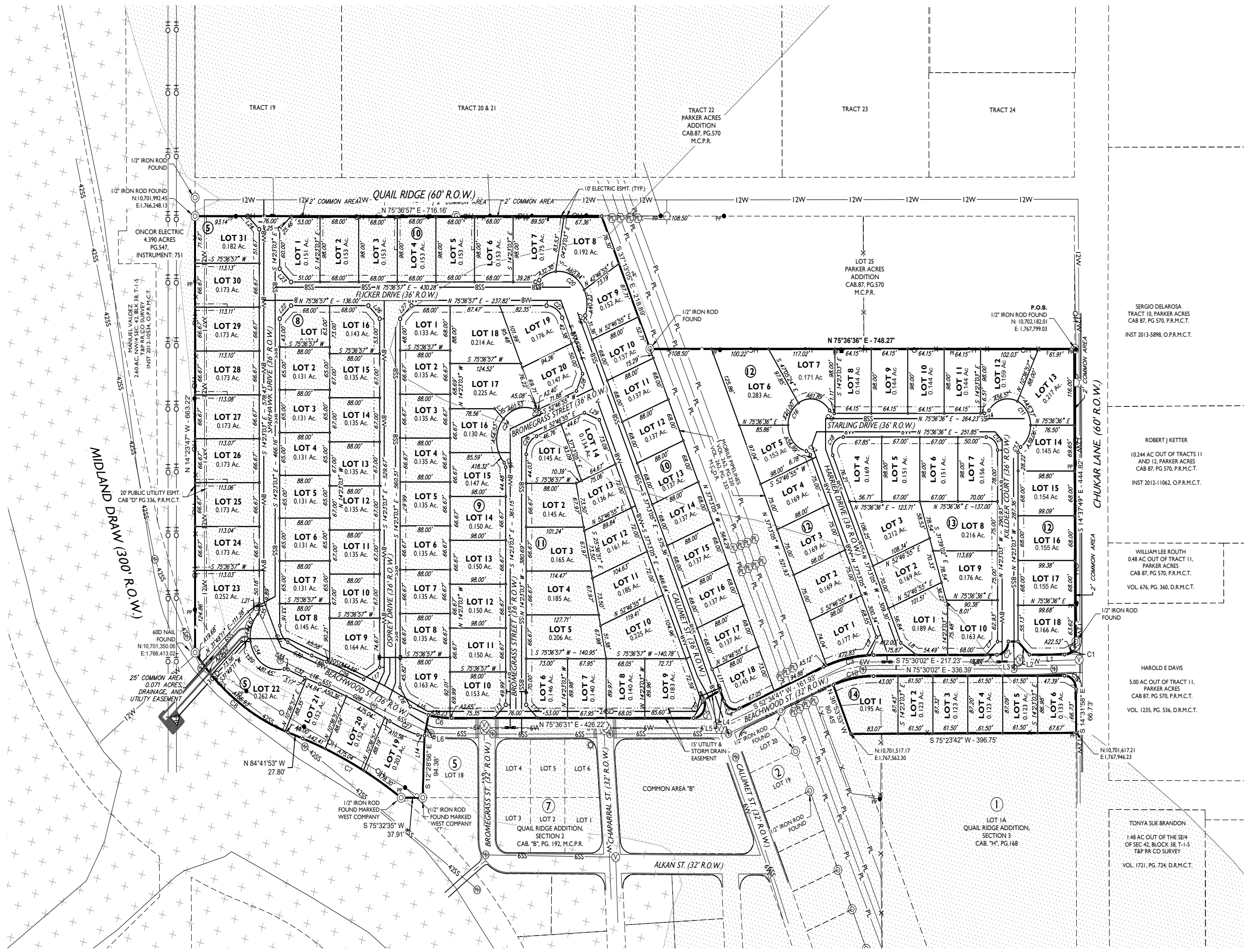

LEGEND

- DENOTES SET 1/2-INCH IRON ROD
- DENOTES FOUND MONUMENT AS NOTED
- DENOTES SAW CUT "X"
- DENOTES BENCH MARK
- DENOTES EXISTING FIRE HYDRANT
- DENOTES EXISTING GAS METER
- DENOTES EXISTING LIGHT POLE
- DENOTES EXISTING MANHOLE
- DENOTES EXISTING POWER POLE
- DENOTES EXISTING WATER METER
- DENOTES EXISTING WATER VALVE
- DENOTES BOUNDARY LINE
- DENOTES EXISTING EASEMENT LINE
- DENOTES EXISTING FENCE
- DENOTES EXISTING GAS LINE
- DENOTES EXISTING OVERHEAD ELECTRIC LINE
- DENOTES PROPOSED 8" SEWER LINE
- DENOTES PROPOSED 8" WATER LINE
- DENOTES EXISTING 6" SEWER LINE
- DENOTES EXISTING UNDERGROUND PIPELINE
- DENOTES EXISTING 6" WATER LINE
- DENOTES CONCRETE
- DENOTES FEMA ZONE "AE"
- DENOTES FEMA SHADED ZONE "X"

CURVE	RADIUS	ARC LENGTH	CHORD LENGTH	CHORD BEARING	DELTA ANGLE
C1	20.00'	31.27'	28.18'	N 30°56'58" E	89°35'25"
C2	20.00'	31.56'	28.39'	S 30°17'42" W	90°24'46"
C3	229.48'	89.95'	89.37'	S 64°15'34" W	22°27'28"
C4	20.00'	31.60'	28.42'	N 82°09'35" W	90°32'06"
C5	20.00'	39.27'	33.26'	S 19°21'28" W	112°30'04"
C6	190.95'	40.88'	40.81'	S 81°44'30" W	12°16'03"
C7	750.00'	195.76'	195.20'	N 76°55'52" W	14°57'17"
C8	350.00'	206.64'	203.65'	N 67°48'13" W	33°49'38"
C9	20.00'	31.61'	28.42'	N 59°25'59" W	90°33'27"
C10	197.00'	72.53'	72.12'	N 64°57'17" E	21°05'41"
C11	40.00'	140.95'	78.54'	N 59°23'13" W	201°53'39"
C12	20.00'	31.42'	28.29'	N 59°23'13" W	90°00'21"
C13	10.00'	9.76'	9.38'	N 13°35'17" E	55°56'39"
C14	10.00'	9.76'	9.38'	N 47°38'17" E	55°56'39"
C15	10.00'	9.76'	9.38'	S 76°25'04" E	55°56'39"
C16	40.00'	156.88'	73.99'	N 19°11'46" E	224°42'59"
C17	10.00'	9.76'	9.38'	S 65°11'24" E	55°56'39"
C18	20.00'	39.38'	33.32'	N 19°11'46" E	112°49'41"
C19	10.00'	7.48'	7.30'	S 15°48'04" E	42°50'00"
C20	50.00'	133.37'	97.20'	S 70°48'04" E	152°49'59"
C21	10.00'	7.48'	7.30'	N 54°11'57" E	42°50'00"
C22	30.00'	35.17'	33.19'	N 70°48'04" W	67°09'58"
C23	10.00'	7.48'	7.30'	S 74°11'56" W	42°50'00"
C24	50.00'	133.37'	97.20'	N 19°11'56" E	152°49'59"
C25	10.00'	7.48'	7.30'	S 35°48'03" E	42°50'00"
C26	30.00'	35.17'	33.19'	S 19°11'56" W	67°09'58"
C27	234.00'	53.62'	53.50'	N 81°41'37" W	13°07'46"
C28	838.00'	135.95'	135.80'	S 79°46'35" E	9°17'43"
C29	874.00'	70.17'	70.15'	N 82°07'48" W	4°36'00"
C30	226.06'	46.60'	46.52'	S 78°48'56" E	11°48'41"
C31	30.00'	30.64'	29.33'	S 43°38'49" E	58°31'33"
C32	262.06'	32.21'	32.19'	N 81°12'01" W	7°02'30"
C33	10.00'	6.69'	6.57'	S 83°08'56" W	38°20'35"
C34	50.00'	126.08'	95.23'	S 43°47'12" E	144°28'19"
C35	10.00'	7.48'	7.30'	N 07°01'58" E	42°50'00"
C36	20.00'	31.40'	28.28'	N 30°33'25" E	89°57'59"
C37	20.00'	13.53'	13.27'	S 33°48'00" E	38°44'58"
C38	20.00'	31.43'	28.29'	N 30°35'29" E	90°02'07"
C39	20.00'	31.15'	28.09'	N 59°46'54" W	89°13'40"
C40	20.00'	31.38'	28.26'	N 59°32'58" W	89°54'06"

LINE	BEARING	DISTANCE
L1	N 75°30'02" E	61.87'
L2	N 59°26'42" W	28.25'
L3	N 75°37'32" E	17.17'
L4	N 36°53'35" W	17.86'
L5	N 49°18'46" E	32.07'
L6	N 01°32'55" W	32.00'
L7	N 30°30'45" E	28.34'
L8	S 70°51'31" E	33.30'
L9	N 17°35'43" E	32.69'
L10	S 19°11'43" W	27.66'
L11	S 38°48'18" E	35.28'
L12	N 59°23'16" W	28.28'
L13	N 30°36'44" E	28.29'
L14	S 81°35'12" W	11.64'
L15	S 82°27'05" E	34.59'
L16	N 46°16'00" W	34.07'
L17	N 42°53'35" E	33.65'
L18	S 84°41'53" E	28.01'
L19	N 84°41'53" W	28.11'
L20	S 75°36'57" W	15.61'
L21	N 42°59'18" E	24.38'
L22	N 30°36'57" E	28.28'
L23	S 59°23'03" E	28.28'
L24	S 59°23'03" E	28.28'
L25	N 30°36'57" E	28.28'
L26	S 59°23'03" E	28.28'
L27	S 30°36'57" W	28.28'
L28	N 07°46'55" E	28.28'
L29	N 82°13'05" W	28.28'
L30	S 59°23'03" E	21.92'

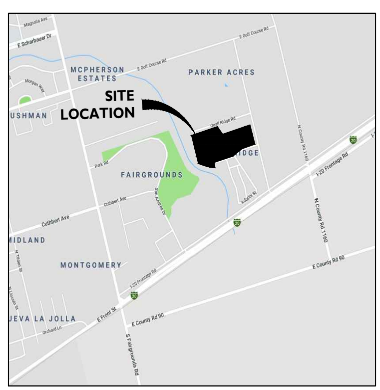

VICINITY MAP

N.T.S.

FEMA FIRM NOTES:

ACCORDING TO FEMA'S N.F.I.P. FLOOD INSURANCE RATE MAP #48329C0093F, DATED SEPTEMBER 16, 2005, THIS PROPERTY IS PARTIALLY WITHIN THE ZONE "AE" BEING "AREAS DETERMINED TO BE WITHIN THE 1.0% ANNUAL CHANCE FLOOD" PER FEMA LOMR DATED MARCH 3, 2016 (CASE NO. 15-06-2420P), AND PARTIALLY WITHIN THE SHADED PORTION OF ZONE "X", BEING "AREAS TO BE WITHIN THE 0.2% ANNUAL CHANCE FLOODPLAIN" AND PARTIALLY WITHIN THE UNSHADED PORTION OF ZONE "X", DESIGNATED AS "AREAS DETERMINED TO BE OUTSIDE OF THE 0.2% ANNUAL CHANCE FLOODPLAIN."

THIS FLOOD STATEMENT DOES NOT IMPLY THAT THE PROPERTY AND/OR THE STRUCTURES THEREON WILL BE FREE FROM FLOODING OR FLOOD DAMAGE. ON RARE OCCASIONS, GREATER FLOODS CAN AND WILL OCCUR AND FLOOD HEIGHTS MAY BE INCREASED BY MAN-MADE OR NATURAL CAUSES. THIS STATEMENT SHALL NOT CREATE LIABILITY ON THE PART OF MAVERICK ENGINEERING.

DEVELOPMENT NOTES:

- GENERAL: SITE PLAN IS FOR A PROPOSED ± 23.434-ACRE SINGLE FAMILY RESIDENTIAL DEVELOPMENT CONSISTING OF 115 LOTS, LOCATED, SECTION 42, BLOCK, 38, T-1-S-. T&P RR. CO. SURVEY, CITY & COUNTY OF MIDLAND, TEXAS.
- ACCESS: THE SITE IS PLANNED IN THREE PHASES WITH FINAL ACCESS TO THREE EXISTING RIGHTS-OF-WAY: CHUKAR LANE, QUAIL RIDGE ROAD, AND BEACHWOOD STREET. ALL ACCESS POINTS ARE PLANNED FOR BOTH INGRESS AND EGRESS.
- SCREENING: ALL FENCING WILL BE 6' WOOD FENCING
- SETBACKS: 25' FRONT MINIMUM SETBACK TO THE FACE OF GARAGE WILL BE OBSERVED. 5' SIDE YARD SETBACKS TO BE PROVIDED. 5' REAR YARD SETBACKS WILL BE OBSERVED IN LOTS NOT ADJOINED BY A REAR ALLEY. NO FENCES OR ANY OTHER STRUCTURES MAY BE CONSTRUCTED WITHIN THE BUILDING SETBACK AREA ON CORNER LOTS.
- EASEMENTS: A 10' UTILITY EASEMENT WILL BE PROVISIONED ALONG ALL PUBLIC FRONTAGES FOR ALL LOTS WITHIN THE SUBDIVISION. A 10' GENERAL ELECTRIC EASEMENT WILL BE SITUATED ALONG SHARED LOT LINES OF PROPERTIES IDENTIFIED AS-NEEDED BY THE SERVICE PROVIDER. EXISTING FACILITIES COVERED WITHIN STANDING EASEMENTS WILL BE OBSERVED.
- TRASH: TRASH WILL BE PICKED UP IN FRONT OF STREETS WITH ROLL-OUT CARTS. THERE WILL BE NO ALLEYS IN THIS SUBDIVISION.
- UTILITIES: WET AND DRY UTILITIES WILL BE ROUTED IN THE CITY RIGHT OF WAY IN ACCORDANCE WITH THE CITY OF MIDLAND STANDARD UTILITY MAIN SPACING DETAIL 414. ALL UTILITIES WILL BE DESIGNED PER CITY OF MIDLAND STANDARDS AND SPECIFICATIONS.
- SITE LIGHTING: LIGHTING WILL BE IN CONFORMANCE WITH CITY OF MIDLAND STANDARDS AND SPECIFICATIONS.
- SIDEWALKS: SIDEWALKS WILL BE IN CONFORMANCE WITH THE CITY OF MIDLAND STANDARDS AND SPECIFICATIONS.

MAVERICK ENGINEERING
1909 West Wall Street, Suite "K"
Midland, Texas 79701
Tel: (432) 262-0999 Fax: (432) 262-0989
www.Maverick-Eng.com

REVISIONS	BY	APPR.	DATE

DRAWN BY: ADH
CHECKED BY: PRH
APPROVED BY:
DATE: 1/20/20
JOB: 180028

PDHD ZONING SITE PLAN

QUAIL RIDGE SUBDIVISION

BEING 23.434-ACRES OF LAND OUT OF SECTION 42, BLOCK 38, T-1-S, T&P RR. CO. SURVEY, CITY OF MIDLAND, MIDLAND COUNTY, TEXAS

PRELIMINARY REVIEW:

THIS PLAN IS RELEASED ON THIS DAY JANUARY 21, 2020, FOR THE PURPOSES OF PLANNING APPROVAL. IT SHALL NOT BE USED FOR THE PURPOSES OF CONSTRUCTION.

SHEET **SP-01** OF 01

MAVERICK
ENGINEERING • SURVEY • WATER RESOURCES
1909 West Wall Street, Suite K • Midland, TX 79701
Tel: 432.262.0999 • Fax: 432.262.0989 • maverick-eng.com
ENGINEER FIRM #: F-15089 | SURVEY FIRM #: 10194514

Quail Ridge Addition, Section 8, a re-plat of portions of Quail Ridge Addition, Cab D Page 336, PRMCT, excluding a portion of Beachwood Street, a platted roadway out of Quail Ridge Addition, Section 2 Cab G Page 192

Commencing at a 1/2" IRF (N: 10,701,992.45, E: 1,766,248.13), NAD 83, Texas Central Zone) the Northwest Corner of Quail Ridge Addition, Section 6, Cabinet L, page 172, PRMCT;

Thence North 75°36'57" East 716.16 Feet along and with the North Line said Quail Ridge Addition, Section 6 and proposed Section 7 to a 1/2" IRF for the Northeast Corner of proposed Quail Ridge Addition, Section 7;

Thence South 37°13'05" East along and with the East line of said proposed Quail Ridge Addition, Section 7 (Seven), 218.89 Feet to a 1/2" IRS for the Northwest Corner and **Point of Beginning** of proposed Quail Ridge Addition, Section 8, Blocks 12 and 13:

Thence North 75°36'36" East 748.27 Feet to a 1/2" IRF for the Northeast Corner of this Survey;

Thence South 14°37'49" East along and with the West Right of Way of Chukar Lane 444.82 Feet to a 1/2" IRF for a Point of Curvature at the Southeast corner of Lot 18, on a Curve to the Right to the North Right of Way of Beachwood Street and the West Right of Way of Chukar Lane;

Thence South 30°56'58" West 28.18 Feet to a 1/2" IRS Cap FIRM 10194514 for a Point of Tangency on the South Line of Block 12;

Thence South 75°30'02" West 61.87 Feet to a 1/2" IRS Cap FIRM 10194514 for a Point of Tangency on the South Line of Block 12;

Thence North 59°26'42" West 28.25 Feet to a 1/2" IRS Cap FIRM 10194514 for a Point of Intersection on the South Line of Block 12;

Thence South 75°37'32" West 17.17 Feet to a 1/2" IRS Cap FIRM 10194514 for a Point of Intersection on the South Line of Block 12;

Thence, following a non-tangent curve to the right, with a radius of 20.00 Feet, a Delta Angle of 90°24'46", an arc length of 31.56 Feet, a Chord bearing South 30°17'42" West and a Chord Distance of 28.39 Feet to a 1/2" IRS Cap FIRM 10194514 for a Point of Intersection on the North Right of Way of Beachwood Avenue;

Thence North 75°30'02" West 217.23 Feet to a 1/2" IRS Cap FIRM 10194514 to a Point of Curvature on the South Line of Block 12;

Thence following a curve to the left, with a radius of 229.48, a Delta Angle of 22°27'28", an arc length of 89.95 Feet, a Chord Bearing South 64°15'34" West and a Chord Distance of 89.37 Feet to a 1/2" IRS Cap FIRM 10194514 for a Point of Tangency on the North Line of Beachwood Street;

Thence South 52°34'41" West 94.88 Feet to a 1/2" IRS Cap FIRM 10194514 for the Southwest Corner of Block 12;

Thence North 37°13’05” West 564.29 Feet to the **Point of Beginning** of Block 12 and this Survey;

And also, Section 8, Block 1, commencing at a ½” IRF at a Point of Curvature on the Southeast Corner of Lot 18, Block 12, on the West Right of Way of Chukar Lane;

Thence crossing platted Beachwood Street, South 14°32’16” East 72.12 Feet to a 1/2” IRS Cap FIRM 10194514 to the Point of Beginning of Block 1;

Thence South 14°31’58 66.73 Feet to a 1/2” IRS Cap FIRM 10194514 at the intersection of the West Right of Way of Chukar Lane at the Southeast Corner of Block 12, Lot 18, Quail Ridge Addition, Section 8;

Thence South 14°32’16” East 72.12 Feet to a 1/2” IRS Cap FIRM 10194514 for the South Right of Way of said Beachwood Street and a Point of Intersection in the East Line of this Survey for a **Point of Beginning** of Block 1 in this Survey;

Thence South 14°31’58” East along and with the West Right of Way of Chukar Lane, 66.73 Feet to a 1/2” IRS Cap FIRM 10194514 for the Southeast Corner of proposed Quail Ridge Addition, Section 8 Block 1;

Thence South 75°23’42” West 396.75 Feet to a 1/2” IRS Cap FIRM 10194514 for the Southwest Corner of Block 1;

Thence North 36°53’53” West 80.45 Feet to a 1/2” IRS Cap FIRM 10194514 for the Northwest Corner of Block 1 and the South Right of Way of said platted Beachwood Street,

Thence along a non-tangent curve to the right with a radius of 197.00 Feet, a Delta angle of 21°05’41”, an Arc length of 72.53 Feet, a Chord bearing North 64°57’17”, and a Chord Distance of 72.12 Feet to a 1/2” IRS Cap FIRM 10194514 for a Point of Intersection on the North Line of Block 1;

Thence North 75°30’02” East 336.39 Feet to a Point of Curvature of a Curve on the North Line of Block 1,

Thence following a Curve to the Right with a Radius of 20.00 Feet, a Delta Angle of 90°33’27”, an Arc Length of 31.61 Feet, a Chord Bearing South 59°25’59” and a Chord Distance of 28.42 Feet to the Point of Beginning of Block 1, the combined area of these two tracts containing ± 7.432 acres.

www.maverick-eng.com
Texas RPLS - No. 6135
Maverick Engineering (FIRM – No. 10194514)
1909 W. Wall St., Suite K
Midland, TX 79701
432-262-0999

03/18/2020

0.004 ACRES - TRACT ONE

LEGAL DESCRIPTION: Being 0.004 acres of land out of Section 42, Block 38, T-1-S, T. & P. RR Co. Survey in Midland County, Texas and also being a portion Beachwood Street of the Quail Ridge Addition, Section 2 as shown on plat recorded in Cab G, Slide 192 of the Plat Records of Midland County, Texas; Said 0.004 acre tract being more particularly described as follows and as surveyed under the supervision of Cross Texas Land Services, Inc in March, 2018;

BEGINNING at a ½" iron rod with cap set for the southeast corner hereof and from which a ½" iron rod at a fence corner post found in the west line of Chuker Lane for the southeast corner of that certain 2.14 acre tract described in Doc. #2014-11212 of the Official Public Records of said Midland County, Texas and the northeast corner of that certain 43.656 acre tract described in Doc. #2012-26321 of said Official Public Records bears North 06°24'21" West a distance of 469.26 feet;

THENCE crossing said Beachwood Street, the following 2 courses:

1. South 75°30'02" West a distance of 14.87 feet to a calculated point for the southwest corner hereof;
2. North 59°26'42" West a distance of 28.25 feet to a calculated point in the north

18.15

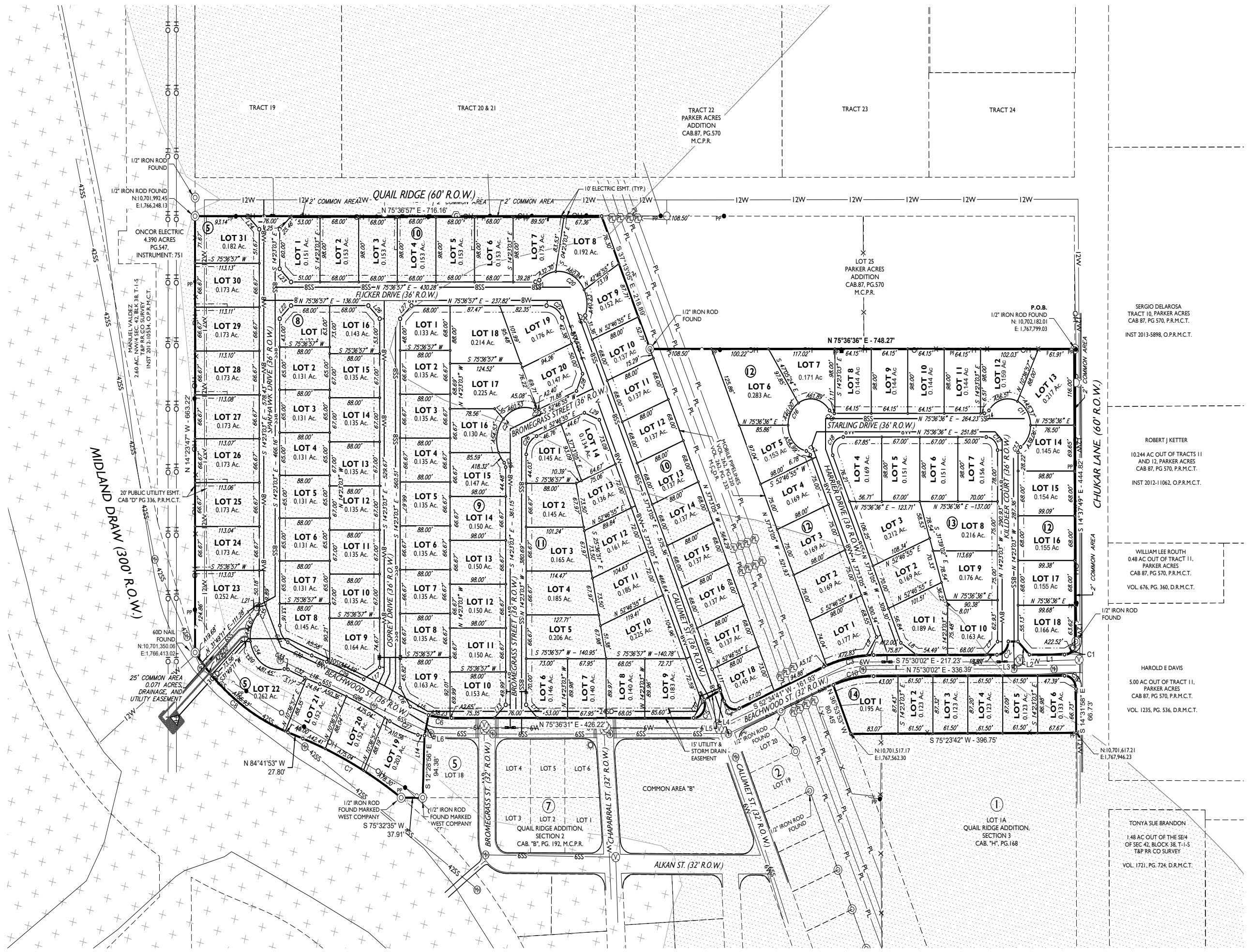

0' 100' 200' 300'
SCALE 1" = 100'

LEGEND

Symbol	Description
◉	DENOTES SET 1/2-INCH IRON ROD
◎	DENOTES FOUND MONUMENT AS NOTED
⊗	DENOTES SAW CUT "X"
⊠	DENOTES BENCH MARK
	DENOTES EXISTING FIRE HYDRANT
GM	DENOTES EXISTING GAS METER
	DENOTES EXISTING LIGHT POLE
MH	DENOTES EXISTING MANHOLE
PP●	DENOTES EXISTING POWER POLE
W	DENOTES EXISTING WATER METER
V	DENOTES EXISTING WATER VALVE
	DENOTES BOUNDARY LINE
	DENOTES EXISTING EASEMENT LINE
—x—x—	DENOTES EXISTING FENCE
—G—	DENOTES EXISTING GAS LINE
—OH—	DENOTES EXISTING OVERHEAD ELECTRIC LINE
—8WW—	DENOTES PROPOSED 8" SEWER LINE
—8W—	DENOTES PROPOSED 8" WATER LINE
—6SS—	DENOTES EXISTING 6" SEWER LINE
—PL—	DENOTES EXISTING UNDERGROUND PIPELINE
—6W—	DENOTES EXISTING 6" WATER LINE
	DENOTES CONCRETE
	DENOTES FEMA ZONE "AE"
	DENOTES FEMA SHADED ZONE "X"

CURVE	RADIUS	ARC LENGTH	CHORD LENGTH	CHORD BEARING	DELTA ANGLE
C1	20.00'	31.27'	28.18'	N 30°56'58" E	89°35'25"
C2	20.00'	31.56'	28.39'	S 30°17'42" W	90°24'46"
C3	229.48'	89.95'	89.37'	S 64°15'34" W	22°27'28"
C4	20.00'	31.60'	28.42'	N 82°09'35" W	90°32'06"
C5	20.00'	39.27'	33.26'	S 19°21'28" W	112°30'04"
C6	190.95'	40.88'	40.81'	S 81°44'30" W	12°16'03"
C7	750.00'	195.76'	195.20'	N 76°55'52" W	14°57'17"
C8	350.00'	206.64'	203.65'	N 67°48'13" W	33°49'38"
C9	20.00'	31.61'	28.42'	N 59°25'59" W	90°33'27"
C10	197.00'	72.53'	72.12'	N 64°57'17" E	21°05'41"
C11	40.00'	140.95'	78.54'	N 59°23'13" W	201°53'39"
C12	20.00'	31.42'	28.29'	N 59°23'13" W	90°00'21"
C13	10.00'	9.76'	9.38'	N 13°35'17" E	55°56'39"
C14	10.00'	9.76'	9.38'	N 47°38'17" E	55°56'39"
C15	10.00'	9.76'	9.38'	S 76°25'04" E	55°56'39"
C16	40.00'	156.88'	73.99'	N 19°11'46" E	224°42'59"
C17	10.00'	9.76'	9.38'	S 65°11'24" E	55°56'39"
C18	20.00'	39.38'	33.32'	N 19°11'46" E	112°49'41"
C19	10.00'	7.48'	7.30'	S 15°48'04" E	42°50'00"
C20	50.00'	133.37'	97.20'	S 70°48'04" E	152°49'59"
C21	10.00'	7.48'	7.30'	N 54°11'57" E	42°50'00"
C22	30.00'	35.17'	33.19'	N 70°48'04" W	67°09'58"
C23	10.00'	7.48'	7.30'	S 74°11'56" W	42°50'00"
C24	50.00'	133.37'	97.20'	N 19°11'56" E	152°49'59"
C25	10.00'	7.48'	7.30'	S 35°48'03" E	42°50'00"
C26	30.00'	35.17'	33.19'	S 19°11'56" W	67°09'58"
C27	234.00'	53.62'	53.50'	N 81°41'37" W	13°07'46"
C28	838.00'	135.95'	135.80'	S 79°46'35" E	9°17'43"
C29	874.00'	70.17'	70.15'	N 82°07'48" W	4°36'00"
C30	226.06'	46.60'	46.52'	S 78°48'56" E	11°48'41"
C31	30.00'	30.64'	29.33'	S 43°38'49" E	58°31'33"
C32	262.06'	32.21'	32.19'	N 81°12'01" W	7°02'30"
C33	10.00'	6.69'	6.57'	S 83°08'56" W	38°20'35"
C34	50.00'	126.08'	95.23'	S 43°47'12" E	144°28'19"
C35	10.00'	7.48'	7.30'	N 07°01'58" E	42°50'00"
C36	20.00'	31.40'	28.28'	N 30°33'25" E	89°57'59"
C37	20.00'	13.53'	13.27'	S 33°48'00" E	38°44'58"
C38	20.00'	31.43'	28.29'	N 30°35'29" E	90°02'07"
C39	20.00'	31.15'	28.09'	N 59°46'54" W	89°13'40"
C40	20.00'	31.38'	28.26'	N 59°32'58" W	89°54'06"

LINE	BEARING	DISTANCE
L1	N 75°30'02" E	61.87'
L2	N 59°26'42" W	28.25'
L3	N 75°37'32" E	17.17'
L4	N 36°53'35" W	17.86'
L5	N 49°18'46" E	32.07'
L6	N 01°32'55" W	32.00'
L7	N 30°30'45" E	28.34'
L8	S 70°51'31" E	33.30'
L9	N 17°35'43" E	32.69'
L10	S 19°11'43" W	27.66'
L11	S 38°48'18" E	35.28'
L12	N 59°23'16" W	28.28'
L13	N 30°36'44" E	28.29'
L14	S 81°35'12" W	11.64'
L15	S 82°27'05" E	34.59'
L16	N 46°16'00" W	34.07'
L17	N 42°53'35" E	33.65'
L18	S 84°41'53" E	28.01'
L19	N 84°41'53" W	28.11'
L20	S 75°36'57" W	15.61'
L21	N 42°59'18" E	24.38'
L22	N 30°36'57" E	28.28'
L23	S 59°23'03" E	28.28'
L24	S 59°23'03" E	28.28'
L25	N 30°36'57" E	28.28'
L26	S 59°23'03" E	28.28'
L27	S 30°36'57" W	28.28'
L28	N 07°46'55" E	28.28'
L29	N 82°13'05" W	28.28'
L30	S 59°23'03" E	21.92'

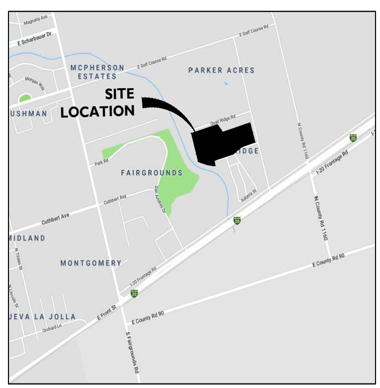

VICINITY MAP

N.T.S.

FEMA FIRM NOTES:

ACCORDING TO FEMA'S N.F.I.P. FLOOD INSURANCE RATE MAP #48329C0093F, DATED SEPTEMBER 16, 2005, THIS PROPERTY IS PARTIALLY WITHIN THE ZONE "AE" BEING "AREAS DETERMINED TO BE WITHIN THE 1.0% ANNUAL CHANCE FLOOD" PER FEMA LOMR DATED MARCH 3, 2016 (CASE NO. 15-06-2420P), AND PARTIALLY WITHIN THE SHADED PORTION OF ZONE "X", BEING "AREAS TO BE WITHIN THE 0.2% ANNUAL CHANCE FLOODPLAIN" AND PARTIALLY WITHIN THE UNSHADED PORTION OF ZONE "X", DESIGNATED AS "AREAS DETERMINED TO BE OUTSIDE OF THE 0.2% ANNUAL CHANCE FLOODPLAIN."

THIS FLOOD STATEMENT DOES NOT IMPLY THAT THE PROPERTY AND/OR THE STRUCTURES THEREON WILL BE FREE FROM FLOODING OR FLOOD DAMAGE. ON RARE OCCASIONS, GREATER FLOODS CAN AND WILL OCCUR AND FLOOD HEIGHTS MAY BE INCREASED BY MAN-MADE OR NATURAL CAUSES. THIS STATEMENT SHALL NOT CREATE LIABILITY ON THE PART OF MAVERICK ENGINEERING.

DEVELOPMENT NOTES:

- GENERAL: SITE PLAN IS FOR A PROPOSED ± 23.434-ACRE SINGLE FAMILY RESIDENTIAL DEVELOPMENT CONSISTING OF 115 LOTS, LOCATED, SECTION 42, BLOCK, 38, T-1-S-. T&P RR. CO. SURVEY, CITY & COUNTY OF MIDLAND, TEXAS.
- ACCESS: THE SITE IS PLANNED IN THREE PHASES WITH FINAL ACCESS TO THREE EXISTING RIGHTS-OF-WAY: CHUKAR LANE, QUAIL RIDGE ROAD, AND BEACHWOOD STREET. ALL ACCESS POINTS ARE PLANNED FOR BOTH INGRESS AND EGRESS.
- SCREENING: ALL FENCING WILL BE 6' WOOD FENCING
- SETBACKS: 25' FRONT MINIMUM SETBACK TO THE FACE OF GARAGE WILL BE OBSERVED. 5' SIDE YARD SETBACKS TO BE PROVIDED. 5' REAR YARD SETBACKS WILL BE OBSERVED IN LOTS NOT ADJOINED BY A REAR ALLEY. NO FENCES OR ANY OTHER STRUCTURES MAY BE CONSTRUCTED WITHIN THE BUILDING SETBACK AREA ON CORNER LOTS.
- EASEMENTS: A 10' UTILITY EASEMENT WILL BE PROVISIONED ALONG ALL PUBLIC FRONTAGES FOR ALL LOTS WITHIN THE SUBDIVISION. A 10' GENERAL ELECTRIC EASEMENT WILL BE SITUATED ALONG SHARED LOT LINES OF PROPERTIES IDENTIFIED AS-NEEDED BY THE SERVICE PROVIDER. EXISTING FACILITIES COVERED WITHIN STANDING EASEMENTS WILL BE OBSERVED.
- TRASH: TRASH WILL BE PICKED UP IN FRONT OF STREETS WITH ROLL-OUT CARTS. THERE WILL BE NO ALLEYS IN THIS SUBDIVISION.
- UTILITIES: WET AND DRY UTILITIES WILL BE ROUTED IN THE CITY RIGHT OF WAY IN ACCORDANCE WITH THE CITY OF MIDLAND STANDARD UTILITY MAIN SPACING DETAIL 414. ALL UTILITIES WILL BE DESIGNED PER CITY OF MIDLAND STANDARDS AND SPECIFICATIONS.
- SITE LIGHTING: LIGHTING WILL BE IN CONFORMANCE WITH CITY OF MIDLAND STANDARDS AND SPECIFICATIONS.
- SIDEWALKS: SIDEWALKS WILL BE IN CONFORMANCE WITH THE CITY OF MIDLAND STANDARDS AND SPECIFICATIONS.

MAVERICK ENGINEERING
1909 West Wall Street, Suite "K"
Midland, Texas 79701
Tel: (432) 262-0999 Fax: (432) 262-0989
www.Maverick-Eng.com

DATE	APPR.	BY	REVISIONS

DRAWN BY: ADH
CHECKED BY: PRH
APPROVED BY:
DATE: 1/20/20
JOB: 180028

PDHD ZONING SITE PLAN
QUAIL RIDGE SUBDIVISION

BEING 23.434-ACRES OF LAND OUT OF SECTION 42, BLOCK 38, T-1-S, T&P RR. CO. SURVEY, CITY OF MIDLAND, MIDLAND COUNTY, TEXAS

PRELIMINARY REVIEW:

THIS PLAN IS RELEASED ON THIS DAY JANUARY 21, 2020, FOR THE PURPOSES OF PLANNING APPROVAL. IT SHALL NOT BE USED FOR THE PURPOSES OF CONSTRUCTION.

SHEET SP-01 OF 01

MIDLAND
Planning Division

Zone Change/Planned District Amendment/Site Plan Approval

Project Number: 2-20-0167

Case Number: _____

Applicant *(if acting as Agent, see affidavit on page 2)* Printed Name: Quail Ridge Parnership Investments, LP		Phone ( ) Email	
Address PO Box 50653	City Midland	State TX	Zip 79710

Property Owner Printed Name: Quail Ridge Parnership Investments, LP		Phone ( ) Email	
Address PO Box 50653	City Midland	State TX	Zip 79710

Representative *(if different from Applicant or Property Owner)* Firm: Maverick Engineering Printed Name: Paladin Huckaba		Phone (432-) 262-0999 Email phuckaba@maverick-eng.com	
Address 1909 W. Wall St., Suite K	City Midland	State TX	Zip 79701

Street Address: 2705 E Hwy 80

Legal Description Tract detailed in the attached legal.
Lot: Block: Subdivision:

Current Zoning: PDHD	**Proposed Zone:** PDHD *(List by tracts if more than one district is requested)*

Reason for Zone Change Request: Advance the residential re-plat of this acreage as proposed.

Present Use of Property: Vacant

Proposed Use of Property: Single family homes.

How would this zone change affect the public health, safety and welfare?
Positive beneficial land use stemming from the resulting development in-progress.

Describe how conditions affecting the property have changed since present zoning designation: None

Submittal and Fees
Items to be submitted with this application form:

- Application Fee – Payable to the 'City of Midland'
- Dimensioned Site Plan
- Digital Copies of Site Plan (PDF/JPEG)

BY: .....

RECEIVED
JAN 22 2020

Signature *(by property owner only – authorized agent must sign affidavit below)*	
Applicant (signature):	Date: 1/21/20
Applicant (printed): Paladin Huckaba	
Property Owner (signature): QUAIL RIDGE PARTNERSHIP INV., LP BY	Date: 1/22/20
Property Owner (printed) : LOUIE CARAVEO	

The Zone Change/Planned District Amendment/Site Plan Approval shall be considered officially received in the Planning office only when it has been submitted in full compliance with the provisions of Section 212 of the Texas Local Government Code and the Zoning Code of Ordinances of the City of Midland and when such required items for the application are also received.

All materials, including exhibits, submitted in support of an application, or displayed during a public hearing, shall remain the property of the City of Midland.

If an agent is authorized by the property owner to file and execute the application on behalf of the property owner, the agent must complete the affidavit below.

STATE OF TEXAS
COUNTY OF MIDLAND

Before me, the undersigned authority, on this day personally appeared Andrew L. Mellen who, being by me duly sworn, upon oath says: That (s)he is authorized by Quail Ridge Part Investments, LP the owner of the above described property, to fully represent him/her in this application and that (s)he had the legal right, power and authority to sign said owner's name hereto as his/her attorney in fact.

Andrew L. Mellen
Authorized Agent (*signature*)

Subscribed and sworn to before me, this 22nd day of January, 2020, to certify which witness my hand and seal of office.

NOTARY PUBLIC STATE OF TEXAS
Kelsey Ann Stine
My Commission Expires
02/19/2022
ID No. 131456388

Kelsey Ann Stine
NOTARY PUBLIC, MIDLAND COUNTY, TEXAS

FOR OFFICE USE ONLY

☑ Property Owner Authorization	☑ Dimensioned Site Plan
☑ Application Fee	☑ Plans in Digital Format (PDF/JPEG)
Check # 3113	
Received By: GAC	Date: JAN 22 2020 RECEIVED

****Application will not be considered for scheduling until reviewed by a planner.****

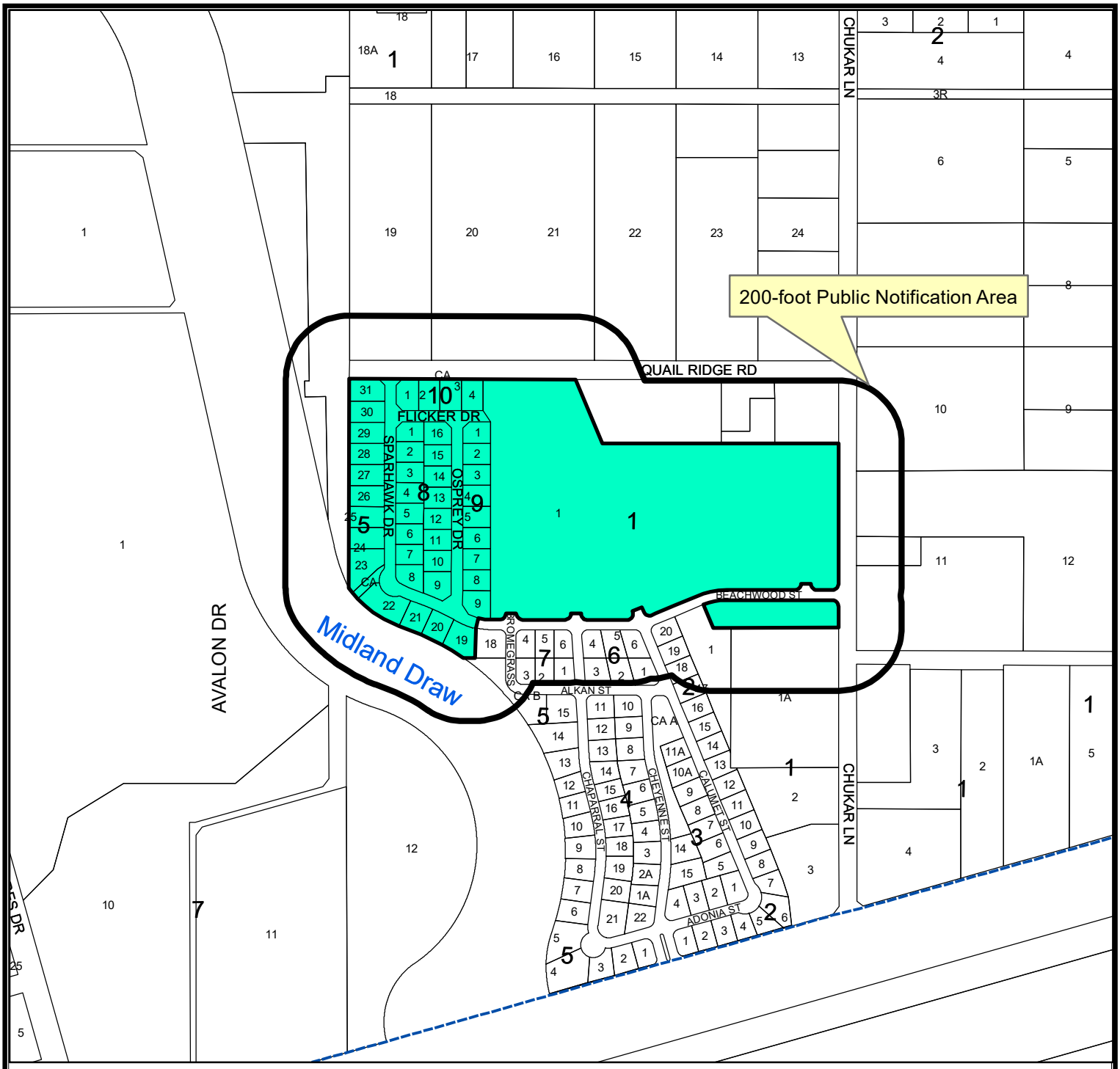

LOCATION MAP

Z-20-0167 **Scale: 1" = 400'**

Consider a request by Maverick Engineering for a zone change from PD, Planned District for a Housing Development to an amended PD, Planned Development District for a Housing Development on:Lots 19 through 31, Block 5; Lots 1 through 16, Block 8; Lots 1 through 9, Block 9; and Lots 1 through 4, Block 10; all out of Quail Ridge Addition, Section 6; Lots 10 through 20, Block 9; Lots 5 through 18, Block 10; and Lots 1 through 14, Block 11; all out of Quail Ridge Addition, Section 7; a 7.432-acre portion of Lot 1, Block 1, Quail Ridge Addition; and a previously vacated 0.004 acre portion of Beachwood Street right-of-way, Quail Ridge Addition, Section 2; City and County of Midland, Texas.

Generally located on the northwest corner of the intersection of Chukar Lane and Beachwood Street. (Council District 2)

LEGEND

- CITY LIMITS
- PARCEL
- PRIVATE BLDGS

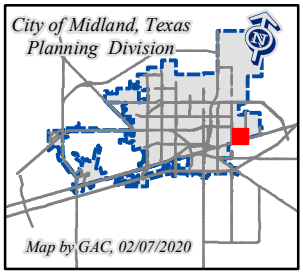

©THE CITY OF MIDLAND - 2020
THIS DATA IS NOT A SUBSTITUTION FOR A SURVEY PRODUCT, NOR IS IT DESIGNED TO BE USED AS A PRIMARY TOOL IN PERMITTING OR OTHER DECISIONS BASED SOLELY ON THE INFORMATION CONTAINED HEREIN.
THE CITY OF MIDLAND SHALL NOT BE RESPONSIBLE I ANY DECISIONS BASED UPON THE USE OF THIS DAT

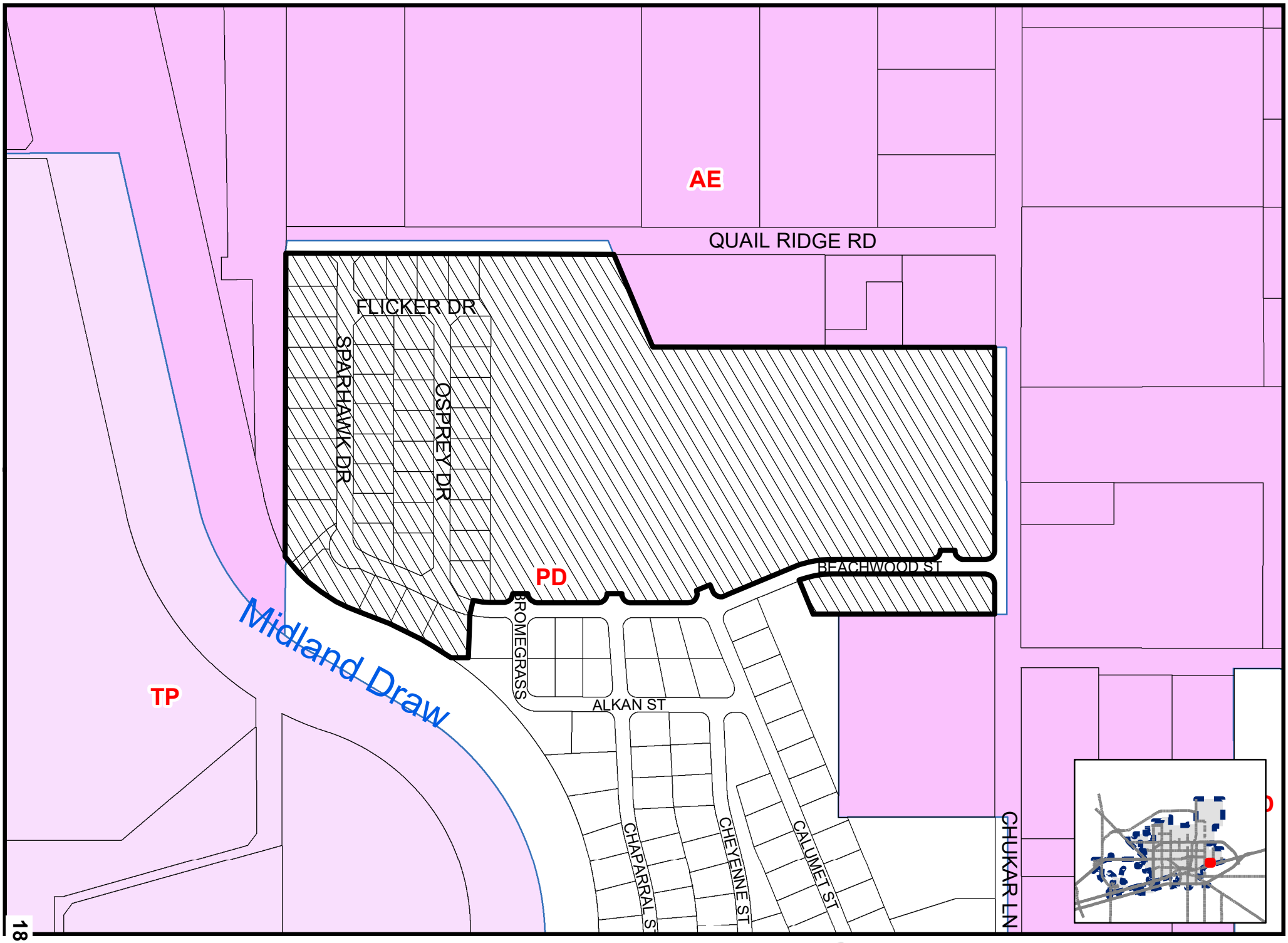

18.19

p By GAC, 02/7/2020

Z-20-0167

Scale: 1" = 200'

ZONING MAP

© THE CITY OF MIDLAND - 2020: THIS DATA IS NOT A SUBSTITUTION FOR A SURVEY PRODUCT, NOR IS IT DESIGNED TO BE USED AS A PRIMARY TOOL IN PERMITTING OR OTHER DECISIONS BASED SOLELY ON THE INFORMATION CONTAINED HEREIN. THE CITY OF MIDLAND SHALL NOT BE RESPONSIBLE FOR ANY DECISIONS BASED UPON THE USE OF THIS DATA.

ORDINANCE NO. 8536

AN ORDINANCE CHANGING THE ZONING CLASSIFICATION BY AMENDING CHAPTER ONE, TITLE XI, OF THE CITY CODE OF MIDLAND, TEXAS, BY PERMITTING A 41.16-ACRE TRACT OF LAND LOCATED IN SECTION 42, BLOCK 38, T-1-S, T & P RR CO. SURVEY, CITY AND COUNTY OF MIDLAND, TEXAS, WHICH IS PRESENTLY ZONED AE, AGRICULTURAL ESTATE DISTRICT, TO BE USED AS A PD, PLANNED DISTRICT FOR A HOUSING DISTRICT; PERMITTING A 2.50-ACRE TRACT OF LAND LOCATED IN SECTION 42, BLOCK 38, T-1-S, T & P RR CO. SURVEY, CITY AND COUNTY OF MIDLAND, TEXAS, WHICH IS PRESENTLY ZONED AE, AGRICULTURAL ESTATE DISTRICT, TO BE USED AS A CE, COUNTRY ESTATE DISTRICT; PROVIDING FOR SUCH USE TO BE SUBJECT TO CERTAIN SPECIAL CONDITIONS AND RESTRICTIONS AS SET OUT HEREIN; CONTAINING A CUMULATIVE CLAUSE; CONTAINING A SAVINGS AND SEVERABILITY CLAUSE; PROVIDING FOR A MAXIMUM PENALTY OR FINE OF TWO THOUSAND DOLLARS ($2,000.00); AND ORDERING PUBLICATION

WHEREAS, the City Planning and Zoning Commission and the Governing Body of the City of Midland, in compliance with the City Charter and the State law with reference to the creation of "Planned Districts" under the zoning ordinance regulations and zoning map, have given the requisite notices by United States mail, publication and otherwise; and after a full and fair hearing to all of the property owners generally and particularly to those interested persons situated in the affected area and in the vicinity thereof, the Governing Body finds that the public health, safety and general welfare will be best served by the creation of the zoning districts set out hereinafter, and subject to the conditions and restrictions set out hereinafter;

NOW, THEREFORE, BE IT ORDAINED BY THE CITY COUNCIL OF THE CITY OF MIDLAND, TEXAS:

SECTION ONE. That Chapter 1, Title XI, of the City Code of Midland, Texas, and the official zoning map of the City of Midland, Texas, are hereby amended insofar as the hereinafter described property is concerned, which is presently zoned AE, Agriculture Estate District, and it shall be used as a PD, Planned District for a Housing Development, subject

This revised plan establishes a minimum width of 32 feet for all streets, whereas the original plan had some 25-foot streets. The street pattern in the area with the original 25-foot streets has been revised, and the lot sizes have been increased. The number of lots has been reduced from 220 to 205. In addition, two of the three streets intersecting Chukar Lane have been eliminated, and one new street intersecting Business I-20 has been added with approval by TxDOT. Two off-street parking spaces would be provided on each lot and a 15-foot front yard setback is still proposed. Lot widths average around 67 feet and the depth is around 87 feet. The attached Exhibit A would govern the actual lot sizes. Also on Exhibit A, there are three common areas that will be used as playgrounds. The office and clubhouse from the original plan have been eliminated. Instead, this land will be platted as two lots fronting onto Chukar Lane that will be rezoned to a CE District. Screening fences are planned where lots back toward public streets. Fence details are illustrated on Exhibit A. The fences will also be placed in common areas. The associated plat will contain restrictive covenants that will govern the ownership and maintenance responsibilities of the common areas. A fee will be collected from homeowners for maintenance purposes.

A total of 15 notices were mailed to adjoining property owners. One person spoke in opposition to this proposal during the Planning Commission meeting, and we have received two letters of opposition. The percentage of opposition will be provided during the May 22nd meeting. We continue to believe this is an opportunity for an adaptive reuse of property that would otherwise remain unproductive, as well as for adding to the supply of workforce housing. We concur in the Commission's recommendation for approval of this request.

CDS

Planning and Zoning Commission Meeting
Minutes from April 30, 2007

Z-07-014 - Hold a public hearing and consider a request by **West Company of Midland/Quail Ridge** for a *zone change* from AE, Agriculture Estate District, to PD, Planned District for a Housing Development on of Lot 1, Block 1, Quail Ridge Addition; a 8,073-acre portion of Tract 25, Parker Acres; and a 5.588-acre tract of land out of Section 42, Block 38, T-1-S, T&P RR Co. Survey, City of Midland, Midland County, Texas. (Generally located on the northeast corner of the intersection of Business 20 and Chukar Lane.)

Mr. Daniel Crow, 1010 Oneida St., Denver, CO, spoke as the representative of the applicant. He stated that the request was previously presented to the Planning and Zoning Commission on March 5, 2007. The Commission voted 6-1 to approve the request. He stated he withdrew the application before going to the City Council, because of the neighborhood opposition. Mr. Crow stated he met with the neighborhood and discussed the their concerns and submitted a new application and revised site plan. Mr. Crow also presented a slide presentation with new details regarding new access points, wider lots and streets. Mr. Crow discussed with the Commission the various types and size of homes that will be available. Workforce housing will be approximately 1,300 – 1,550 square feet and Associate level housing will be approximately 1,600 – 1,850 square feet. Mr. Crow commented that four common areas are being proposed and will be maintained by the Homeowners Association.

Mr. Compton presented the staff report. He stated the Commission recommended approval of an earlier request on March 5, 2007, but the City Council did not support the proposal. The applicant chose to withdraw the application at that meeting. After considering the comments received from surrounding property owners, the applicant developed a revised site plan and submitted a new application. Mr. Compton stated the revised site plan contains significant changes. A new entry is shown from the Business I-20 service road. Two roads entering from Chukar Lane have been eliminated. He stated the width of all roads has been increased to 32 feet. The office and clubhouse have been removed however, four common areas will be developed as recreation areas for the residents. He commented that all rear lots will be screened by at least a six-foot tall solid wood fence, but a more decorative fence with stucco and stone is proposed for the perimeter on Business I-20. The Staff recommends approval of the request subject to Conditions A – H of the staff report.

Chairman Hotchkiss asked if anyone in the audience wished to speak in favor of the request. There was none.

Chairman Hotchkiss asked if anyone in the audience wished to speak in opposition of the request. Mr. Wayne Young, 1301 Chukar Lane, spoke for the neighborhood. He stated

that the homeowners met with Mr. Crow regarding the development of the property. Mr. Young is still concerned about the traffic situation, and is not in favor of the request, but stated that Mr. Crow made significant changes to the proposal.

Chairman Hotchkiss asked if anyone else would like to speak in opposition of the request. There being none, the public hearing was closed.

Chairman Hotchkiss asked if the applicant had any further comments.

Mr. Crow discussed with the Commission the timeline for the proposed construction. He stated that the infrastructure and the first phase of construction would take place in June, with homes available for September, 2007.

Chairman Hotchkiss called for a motion. Ms. Ferguson made a motion to approve the request as submitted subject to Conditions A – H of the Staff Recommendation. Mr. Bergman seconded the motion and the motion passed unanimously.

PLANNING AND ZONING COMMISSION

April 30, 2007

CASE: Z-07-014.

REQUEST: Hold a public hearing and consider a request for a zone change from AE, Agriculture Estate District to PD, Planned District for a Housing Development; and CE, Country Estate District.

APPLICANT/OWNER: Banner Communities, LLC.

REPRESENTATIVE: West Company of Midland.

LEGAL DESCRIPTION: A 43.656-acre tract out of Section 42, Block 38, T-1-S, T&P Railway Company Survey, Midland County, Texas.

LOCATION: Northwest corner of Business I-20 and Chukar Lane.

ASSOCIATED CASE: P-06-02, Quail Ridge, Section 2.

DETAILS OF REQUEST:

1. This is the second time the Planning Commission has considered a zone change request on this land in the past few months. While the Commission recommended approval of an earlier request on March 5, 2007, the City Council did not support the proposal when it considered the application on April 10, 2007. After considering his options, the applicant chose to withdraw the application at that meeting. By doing so, he avoided the need to wait one year to have a request reconsidered. Following the Council's direction and considering the comments received from adjoining property owners, the applicant has developed a revised site plan, and has submitted a new application. As the Commission may recall, this property was developed as a manufactured home park prior to being annexed in 1982. The land was under a single ownership, with manufactured home spaces available for lease. The park was served with a private street and water system, and septic systems. The applicant's plan is to redevelop this land into a single-family residential neighborhood with public streets and new public water and sewer lines. Further, the land will be subdivided into individual lots, and each lot and respective home will be under a common ownership. The

homes will be modular homes, and not manufactured homes. The applicant proposes that all but two lots will be subject to the development regulations of the 1F-3 District, and to the conditions shown on the site plan, Exhibit A. The remaining two lots would be rezoned to a CE District.

SURROUNDING ZONING AND LAND USE:

2. The subject property is bounded on the north by Quail Ridge Road, on the east by Chukar Lane, on the south by Business I-20, and on the west by Midland Draw. The land to the north and east is zoned AE District, and is sparsely developed. The land south of Business I-20 is outside the City limit. The area west of Midland Draw is zoned IP-1 District, and is developed with a variety of commercial businesses.

ANALYSIS:

3. The proposed lot sizes as shown on Exhibit A do not meet the minimum 1F-3 District requirements of 50 feet of width, 100 feet of depth and 5,500 square feet of area. This is mainly because the public streets will follow the general alignment of the private streets established within the manufactured home park. Additionally, the streets are only 32 feet wide, instead of 50 or 60 feet, and there will be no public sidewalks internal to the site. If the streets were widened, the lots would be shallower than shown on the site plan.

   However, this revised site plan contains several significant changes, again in response to adjoining property owners and the City Council. Regarding streets, a new entry is shown from the Business I-20 service road, with a landscaped median. Two roads entering from Chukar Lane have been eliminated. (The first submittal removed all three streets from Chukar. However, we felt at least three public roads are needed.) A single street from Quail Ridge Drive remains unchanged. Finally, the width of all roads is now has been increased to 32 feet, whereas the original plan had some streets only 25 feet wide. Additional changes include a redesign of the street system for the area north of the Mobil pipeline, and an increase in lot size in this area. This change reduced the number of lots from 220 to 192. This yields a density of 4.4 dwelling units per acre, down from 5.0 dwelling units per acre on the original plan. He is still requesting a 15-foot front yard setback. Most lots will have garages, and some will be set up as a zero lot line condition on the plat. There are now two large lots, Lots 1A and 2, Block 1 shown at the northwest corner of Business I-20 and Chukar Lane. This property has been removed from the neighborhood, and will be sold as separate lots that will be subject to the CE District zoning regulations. The office and clubhouse from the original submittal have been removed. However, there are still four common areas that will be developed as

recreation areas for the residents. Regarding the matter of fences, all rear lots will be screened by at least a six-foot tall solid wood fence. However, where lots back toward Business I-20, a more decorative fence with a stucco finish and stone pilasters is planned, as shown on Exhibit A. Along the other streets, a solid wood fence with stone pilasters is proposed, except that metal posts are planned along the westernmost portion of Quail Ridge Road. Landscaping will be provided along Business I-20 in the form of three-inch caliper trees planted on 50-foot centers. A home owners association will be responsible for maintaining all common areas and landscaping.

We continue to believe that this is a reasonable development plan that can help provide a supply of workforce housing. We believe this revised plan represents an improvement from the original plan, particularly with a decrease in density, an increase in street width, and a street onto Business I-20 (TxDOT has already approved a street at this location).

STAFF RECOMMENDATION:

We recommend approval of this request for a zone change from AE, Agriculture Estate District to PD, Planned District for a Housing Development, subject to the following conditions:

A. **The development of this property shall conform to the regulations of the 1F-3, One-Family Dwelling District, except as otherwise stated below. Provided, however, that Lots 1A and 2, Block 1 shall be subject to CE District regulations.**

B. **The development of this property shall conform to the conditions shown on Exhibit A in all respects.**

C. **This property shall be platted prior to the issuance of any building permits.**

D. **Common areas shall be established as shown on the Exhibit A. Screening fences consistent with the conditions on Exhibit A shall be constructed and completed prior to the issuance of any Certificates of Occupancy.**

E. **Common areas internal to the site shall be developed as recreational areas.**

F. **The minimum front yard setback shall be 15 feet, except for Lots 1A and 2, Block 1, which shall conform to CE District regulations.**

G. **A minimum of two off-street parking spaces will be provided on each lot.**

H. **All landscaping shown on Exhibit A shall be irrigated with an underground sprinkler system, and shall be maintained in a healthy, growing condition.**

Cameron Walker, AICP
Planning Division Manager
Department of Development Services

Jim Compton, Senior Planner
Department of Development Services

Attachments:

Application
Maps
Exhibit A

Case Number: Z-07-014 ~~Z-06-025~~

CITY OF MIDLAND
Planning Division

APPLICATION TO CHANGE ZONING CLASSIFICATION

Applicant: West Company of Midland / Quail Ridge

Address: 110 W. Louisiana, Suite 110 (Street Address) 682-0588 (Phone)
Midland, Texas (City) 79701 (Zip Code)

Property Owner: Banner Communities, LLC

Address: 10010 S. Oneida Street, Suite A-102 (Street Address) 303-770-4220 (Phone)
Denver, CO (City) 80224 (Zip Code)

Street address and Legal Description of property (complete Lot, Block, and Subdivision Name description below, or, if not in a recorded plat, attach a Metes and Bounds Description. Describe by tracts if more than one zoning district is requested): Lot 1, Block 1, Quail Ridge Addition and 8.073 acre tract out of Tract 25, Parker Acres, and a 5.588 acre tract out of section 42, Block 38, T1S, T&P RR Company Survey, Midland Co, TX.

Reason for requesting a zone change: Develop a residential housing development

PRESENT ZONE: AE REQUESTED ZONE: PDHD
(List by tracts if more than one zoning district is requested)

Present Use of Property: Vacant mobile home park

Proposed Use of Property: Work Force housing project

How will zone change affect the public health, safety and welfare? The requested zoning will have a positive affect on the public health, safety and welfare.

Describe how conditions affecting the property have changed since it was designated its present zone: Need for work force housing.

Will a Specific Use Permit with Term for alcoholic beverages sales be needed: ___ Yes _X_ No

20061175

RECEIVED
DEC - 5 2006

NOTE: If property owner is to be represented by an authorized agent, the agent should sign the property owner's name and his own on the lines provided above and complete the affidavit below.

A $400.00 filing fee shall accompany all requests for a single, standard zone change request. A multiple zone change proposal shall incur an additional $100.00 fee per district requested in excess of one. A $550.00 filing fee shall accompany all requests for a single PD, Planned District zone change request. A multiple PD proposal shall incur an additional $75.00 fee per additional district. If no public hearing is called, 80% of the fee will be refunded. If needed, a Traffic Impact Analysis may be required and a fee of up to $600.00 will be assessed.

NOTE: CD of Site Plan must be submitted in .pdf and .jpg format 10 days prior to hearing before City Council, in addition to the required eight (8) paper copies for internal routing purposes.

Property Owner: Banner Communities, LLC Date: 12-5-06

By: Max W. Richardson Date: 12-5-06
(If applicable - see note)

State of Texas §
County of Midland §

Before me, the undersigned authority, on this day personally appeared Max W. Richardson who, being by me duly sworn, upon oath says: That he is authorized by Banner Communities, LLC, the owner of the above described property, to fully represent him in this application and that he has the legal right, power and authority to sign said owner's name hereto as his attorney in fact.

Max W. Richardson
(Signature of Affiant)

Subscribed and sworn to before me, by the said Max W. Richardson, this 5th day of December, 2006, to certify which witness my hand and seal of office.

JOHNNY RAY POINDEXTER
Notary Public, State
My Commission Expires 12-15-07

Notary Public, Midland County, Texas

FOR OFFICE USE ONLY
Rec'd By: CW Date: 12/5/06
Assigned: JC
For: P+Z On: 1/2/07

****Application will not be considered for scheduling until reviewed by a planner.****

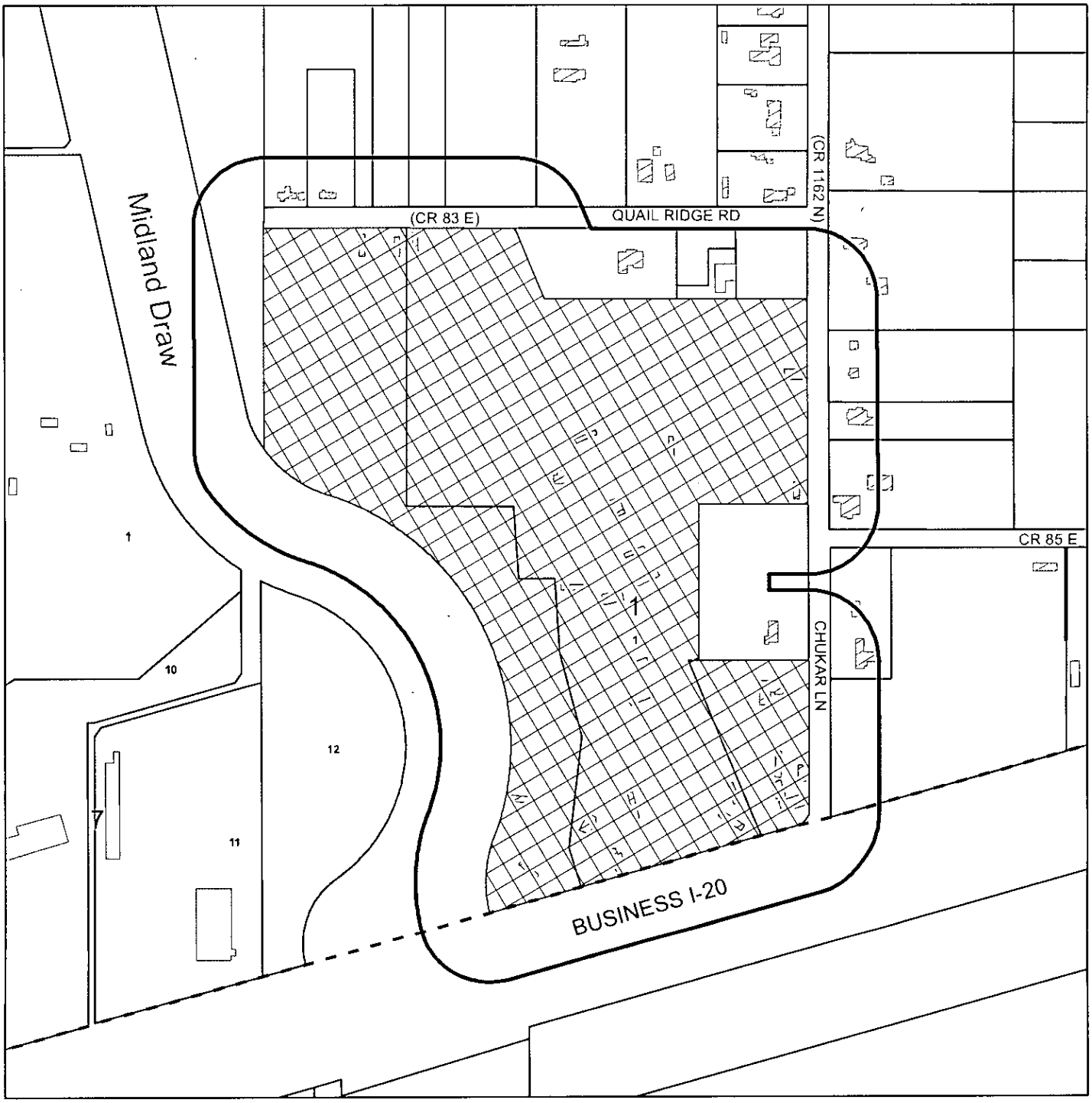

PROPERTY OWNER NOTIFICATION MAP

Z - 07 - 014 **Scale: 1" = 400'**

Consider a request for a zone change from AE, Agriculture Estate District, to PD, Planned District for a Housing Development on Lot 1, Block 1, Quail Ridge Addition; a 8.073-acre portion of Tract 25, Parker Acres; and a 5.588 acre tract of land out of Section 42, Block 38, T-1-S, T & P RR Co. Survey, City of Midland, Midland County, Texas.

LEGEND

- CITY LIMITS
- CITY PARCEL
- COUNTY PARCEL
- PUBLIC BLDGS
- PRIVATE BLDGS

City of Midland, Texas
Planning Division

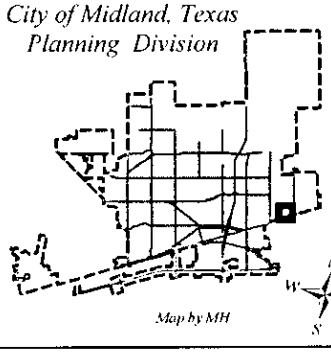

Map by MH

to the special conditions and restrictions hereinafter set out, said property being described as follows:

A 41.16-acre tract of land located in Section 42, Block 38, T-1-S, T & P RR Co. Survey, City and County of Midland, Texas, and more specifically described by metes and bounds in Exhibit "B", attached hereto and incorporated herein for all purposes.

SECTION TWO. That the development of the property described in Section One hereof shall conform to the regulations of the 1F-3, One-Family Dwelling District, except for the following conditions:

1. That the development of the property described in Section One hereof shall strictly conform to the conditions shown on the site plan marked as Exhibit "A", which is attached hereto and incorporated herein for all purposes.

2. That this property shall be platted prior to any development or the issuance of any building permit. Said plat must conform to the site plan (Exhibit "A"). All internal streets shall be dedicated as public right-of-way.

3. That the common areas shall be established adjacent to all streets where a lot backing condition occurs. Screening fences consistent with the details shown on Exhibit "A" shall be constructed adjacent to each lot prior to the issuance of a building permit. Provided, however, that the fence along Business I-20 shall be constructed with the initial development of this property.

4. That the locations on Exhibit "A" designated as Common Areas A, B, C, and D shall be developed as recreational areas.

5. That the minimum front-yard setback shall be fifteen (15) feet.

6. That a minimum of two off-street parking spaces will be provided on each lot.

7. That the perimeter landscaping shall be irrigated with an underground sprinkler system and maintained in a healthy, growing condition by a homeowners association.

SECTION THREE. That Chapter 1, Title XI, of the City Code of Midland, Texas, and the official zoning map of the City of Midland, Texas, are hereby amended insofar as the hereinafter described property is concerned, which is presently zoned AE, Agriculture Estate District, and it shall be used as a CE, Country Estate District, said property being described as follows:

A 2.50-acre tract of land located in Section 42, Block 38, T-1-S, T & P RR Co. Survey, City and County of Midland, Texas, and more specifically described by metes and bounds in Exhibit "C", attached hereto and incorporated herein for all purposes.

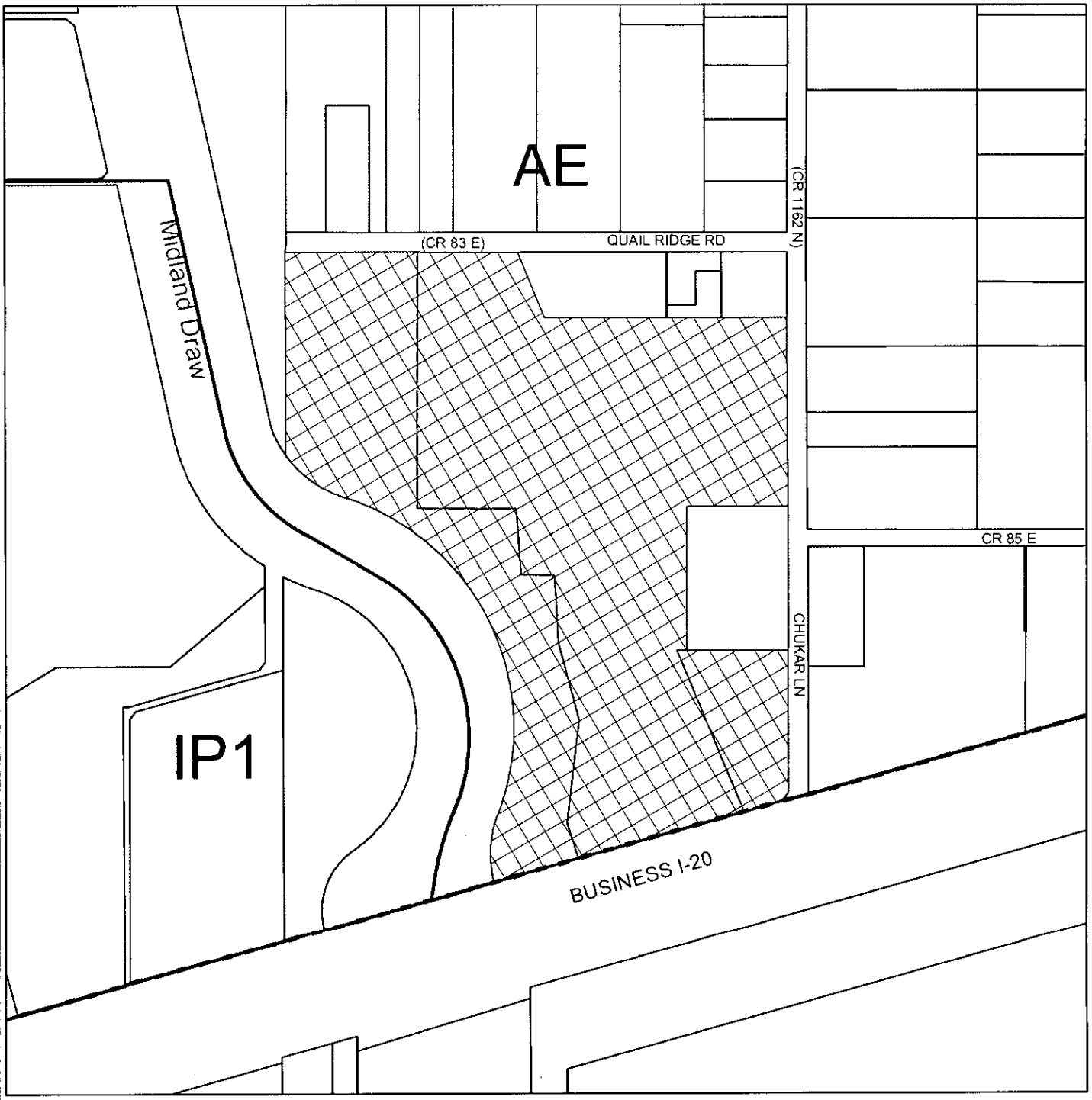

ZONING MAP

Z - 07 - 014 **Scale: 1" = 450'**

Consider a request for a zone change from AE, Agriculture Estate District, to PD, Planned District for a Housing Development on Lot 1, Block 1, Quail Ridge Addition; a 8.073-acre portion of Tract 25, Parker Acres; and a 5.588 acre tract of land out of Section 42, Block 38, T-1-S, T & P RR Co. Survey, City of Midland, Midland County, Texas.

LEGEND

ZONING | CITY PARCELS | COUNTY PARCELS

SPECIFIC USE PERMITS | CITY LIMITS | PUBLIC BLDGS

ZONING DISTRICTS:

FD	FUTURE DEVELOPMENT	BP	BUSINESS PARK
PD	PLANNED DISTRICT	P	PARKING
AE	AGRICULTURE ESTATE	01, 02	OFFICE
CE	COUNTRY ESTATE	NS	NEIGHBORHOOD SERVICE
1F1, 1F2, 1F3	ONE-FAMILY DWELLING	LR1, LR2 ,LR3	LOCAL RETAIL
MH	MOBILE HOME DWELLING	C1, C2, C3	COMMERCIAL
TH	TOWNHOUSE DWELLING	IP ,IP1, IP2, IP3	INDUSTRIAL PARK
2F	TWO-FAMILY DWELLING	LI	LIGHT INDUSTRY
MF1, MF2	MULTIPLE FAMILY DWELLING	HI	HEAVY INDUSTRY

SECTION FOUR. That the definitions given in the zoning regulations contained in the City Code of the City of Midland, Texas, shall be applicable to such of those terms as are used herein.

SECTION FIVE. The provisions of this ordinance are to be cumulative of all other ordinances or parts of ordinances governing or regulating the same subject matter as that covered herein; provided, however, that all prior ordinances or parts of ordinances inconsistent with or in conflict with any of the provisions of this ordinance are hereby expressly repealed to the extent of any such inconsistency or conflict.

SECTION SIX. If any section, subsection, sentence, clause or phrase of this ordinance is, for any reason, held to be unconstitutional or invalid, such holding shall not affect the validity of the remaining portions of this ordinance. The Council of the City of Midland hereby declares that it would have passed this ordinance and each section, subsection, sentence, clause, or phrase hereof irrespective of the fact that any one or more sections, subsections, sentences, clauses, or phrases be declared unconstitutional or invalid.

SECTION SEVEN. The penalty for violation of this ordinance shall be in accordance with the general penalty provisions contained in Section 1-3-1 of the City Code of Midland, Texas, which provides for a fine not exceeding two thousand dollars ($2,000.00).

SECTION EIGHT. The City Secretary is hereby authorized and directed to publish the descriptive caption of this ordinance in the manner and for the length of time prescribed by the law as an alternative method of publication.

The above and foregoing ordinance was duly proposed, read in full and adopted on first reading, the 22nd day of May, A.D., 2007; and passed to second reading on motion of Council member Hailey, seconded by Council member Dingus, by the following vote:

Council members voting "AYE": Hailey, Dingus, Perry, Morgan, Canon, Simpson and Dufford

Council members voting "NAY": None

The above and foregoing ordinance was read in full and finally adopted by the following vote upon motion of Council member Perry, seconded by Council member Morgan, on the 26th day of June, A.D., 2007, at a regular meeting of the City Council:

Council members voting "AYE": Perry, Morgan, Dingus, Simpson, Dufford and Hailey

Council members voting "NAY": None

PASSED AND APPROVED THIS 26th day of June, A.D., 2007.

Michael J. Canon, Mayor

ATTEST:

Kaylah J. McCord, City Secretary

APPROVED AS TO FORM:

Keith Stretcher, City Attorney

SITE PLAN

QUAIL RIDGE ADDITION, SECTION 2

BEING A REPLAT OF A PORTION OF LOT 1, BLOCK 1, QUAIL RIDGE ADDITION; AND A 8.073 ACRE TRACT OUT OF TRACT 25, PARKER ACRES, CITY AND COUNTY OF MIDLAND, TEXAS; AND A 5.588 ACRE TRACT OUT OF SECTION 42, BLOCK 38, T-1-S, T & P RR. COMPANY SURVEY, MIDLAND COUNTY, TEXAS.

NOTE:
ALL LOTS WITH GARAGES ON PROPERTY LINES WILL BE TREATED AS ZERO LOT LINE DEVELOPMENT.

OWNER:
BANNER COMMUNITIES, LLC.
1010 S. ONELDA STREET
SUITE A-102
DENVER, COLORADO 80224
303-770-4220

STUCCO SCREEN WALL
SECTION
SCALE: 3/4"= 1'-0"

TYPICAL ENTRY STONE COLUMN
ELEVATION/SECTION
SCALE: 3/4"= 1'-0"

WEST TEXAS ENGINEERING
Midland
ENGINEERING - PLANNING
110 W. LOUISIANA AVE.
MIDLAND, TEXAS
(915) 687-0865 - FAX

APRIL, 20
T:\20061175\061

18.35

WEST COMPANY of Midland, Inc.

110 W. LOUISIANA AVE. SUITE 110 MIDLAND, TEXAS 79701-3414
OFFICE (432) 687-0865 FAX (432) 687-0868
Web Page: www.team-west.com

April 24, 2007

BEING a 41.16 acre tract of land out of Section 42, Block 38, T-1-S, T & P RR Company Survey, Midland County, Texas, of which a part hereof is located within Lot 1, Block 1, Quail Ridge Addition, an Addition to the City of Midland, Midland County, Texas, according to the Plat thereof recorded in Plat Cabinet "D", Page 339 of the Plat Records of Midland County, Texas, and 41.316 acre tract being more particularly described as follows:

BEGINNING at a point in the North Right-of-Way line of U.S. Highway 80, for the Southeast corner of this tract, from which the most Southerly Southeast corner of said Lot 1, the Southwest end of a corner clip located at the Northwest corner of the intersection of said U.S. Highway 80 with Chukar Lane (County Road 1162-North) bears N 59°39' 00" E, a distance of 135.72 feet;

THENCE S 59°39'00" W, along said South line of Lot 1 common with the North Right-of-Way line of U.S. Highway 80, a distance of 796.63 feet to a 1/2-inch iron rod found at or near the Northeast corner of the intersection of the North Right-of-Way line of U.S. Highway 80 and the East line of Scharbauer Draw, for the Southwest corner of this tract, said corner also being the beginning of a non-tangential circular curve to the right having a radius of 337.48 feet;

THENCE Northeasterly, along said curve and along the East line of said Scharbauer Draw, through a central angle of 34°21'13", an arc length of 202.35 feet and a chord bearing and distance of N 12°23'59" W – 199.33 feet to the Point of Reverse Curvature of a circular curve to the left having a radius of 750.00 feet;

THENCE continuing Northerly along said curve and along said East line of Scharbauer Draw, through a central angle of 60°17'52", an arc length of 789.30 feet and a chord bearing and distance of N 25°22'19" W, - 753.37 feet to the end of this curve;

THENCE S 34°28'45" W, a distance of 5.00 feet;

THENCE N 56°17'24" W, a distance of 20.00 feet;

THENCE N 32°56'28" E, a distance of 5.00 feet to the beginning of a non-tangential circular curve to the left having a radius of 750.00 feet;

THENCE Northwesterly, along said curve and along said East line of Scharbauer Draw, through a central angle of 27°44'59", an arc length of 363.24 feet and a chord bearing and distance of N 70°56'02" – 359.70 feet to the PT of this curve;

THENCE N 84°48'31" W, along said East line of Scharbauer Draw, a distance of 27.80 feet to the PC of a tangential circular curve to the right having a radius of 350.00 feet;

THENCE Northwesterly, along said curve and along said East line of Scharbauer Draw, through a central angle of 34°11'11", an arch length of 208.83 feet and a chord bearing and distance of N 67°42'56" W – 205.75 feet, to a 1/2-inch iron rod found in said East line of Scharbauer Draw, for a non-tangential end of this curve and for the most Westerly Southwest corner of this tract;

THENCE N 14°31'42" W, departing said East line of Scharbauer Draw, a distance of 663.78 feet to a 1/2-inch iron rod found in the South line of Quail Ridge Road (County Road 83-East), for the Northwest corner of this tract;

EXHIBIT B

THENCE N 75°28'02" E, along the South line of said Quail Ridge Road (County Road 83-East), a distance of 717.32 feet to a 1/2-inch iron rod found for the Northeast corner of this tract;

THENCE S 36°56'47" E, departing said Quail Ridge Road (County Road 83-East) and along an exterior line of said Lot 1, a distance of 219.52 feet to a point for an exterior corner of this tract;

THENCE N 75°28'44" E, along the most Easterly North line of said Lot 1, a distance of 748.54 feet to a 1/2-inch iron rod found in the West Right-of-Way line of said Chukar Lane (County Road 1162-North), at or near the Northeast corner of said Lot 1 for the Northeast corner of this tract;

THENCE S 14°43'00" E, along the East line of said Lot 1 common with the West Right-of-Way line of said Chukar Lane (County Road 1162-North), a distance of 583.62 feet to a 1/2-inch iron rod found for an exterior corner of said Lot 1 and an exterior corner of this tract;

THENCE S 75°23'00" W, along an exterior line of said Lot 1, a distance of 342.40 feet to a point for an interior corner of this tract and an interior corner of said Lot 1;

THENCE S 14°43'00" E, along an exterior line of said Lot 1, a distance of 443.43 feet to a 1/2-inch iron rod found for an interior corner of said Lot 1 and an interior corner of this tract;

THENCE N 75°23'00" E, along an exterior line of said Lot 1, a distance of 19.10 feet to a 1/2-inch iron rod found in the western boundary of a Mobil Pipeline Easement, as recorded in Volume 262, Page 232, Midland County Deed Records, for a corner of this tract;

THENCE S 37°07'56" E, a distance of 375.52 feet to a point for a corner of this tract;

THENCE S 32°27'00" E, a distance 66.00 feet to a point for a corner of this tract;

THENCE S 20°57'00" E, a distance of 93.00 feet to the Place of Beginning and containing 41.16 acres of land

QUAIL RIDGE
PD for Housing Development 1-F3

Job No. 2006-1175

EXHIBIT B

WEST COMPANY of Midland, Inc.

110 W. LOUISIANA AVE. SUITE 110 MIDLAND, TEXAS 79701-3414
OFFICE (432) 687-0865 FAX (432) 687-0868
Web Page: www.team-west.com

April 24, 2007

BEING a 2.50 acre tract of land out of Section 42, Block 38, T-1-S, T & P RR Company Survey, Midland County, Texas, of which a part hereof is located within Lot 1, Block 1, Quail Ridge Addition, an addition to the City of Midland, Midland County, Texas, according to the Plat recorded in Plat Cabinet "D", Page 336 of the Plat Records of Midland County, Texas and said 2.50 acre tract being more particularly described as follows:

BEGINNING at a point in the most Southerly Southeast corner of said Lot 1, located in the North Right-of-Way line of U.S. Highway 80 and at the Southwest end of a corner clip at the Northwest corner of the intersection of said U.S. Highway 80 with Chukar Lane (County Road 1162-North), for the most Southerly Southeast corner of this tract;

THENCE S 59°39'00" W, along the North Right-of-Way line of said U.S. Highway 80, a distance of 135.72 feet to a point for an exterior corner of this tract;

THENCE N 20°57'00" W, departing said Right-of-Way line, a distance of 93.00 feet to a point for an interior corner of this tract;

THENCE N 32°27'00" W, a distance of 66.00 feet to a point for an interior corner of this tract;

THENCE N 37°07'56" W, a distance of 375.52 feet to a point in the southern boundary of the Darrell Van Perry tract, as recorded in Volume 621, Page 170, Midland County Deed Records, and an exterior line of said Lot 1 for the northwest corner of this tract;

THENCE N 75°23'00" E, along an exterior line of said Lot 1, a distance of 323.30 feet to a 1/2-inch iron rod found in the West Right-of-Way line of said Chukar Lane (County Road 1162-North) for an exterior corner of said Lot 1 and an exterior corner of this tract;

THENCE S 14°43'00" E, along the West Right-of-Way line of said Chukar Lane (County Road 1162-North) common with the East line of said Lot 1, a distance of 439.74 feet to a point located at the North end of a corner clip found at the Northwest corner of the intersection of said Chukar Lane (County Road 1162-North) with U.S. Highway 80, for an exterior of said Lot 1 and an exterior corner of this tract;

THENCE S 22°10'00" W, along said corner clip, a distance of 31.99 feet to the POINT OF BEGINNING and containing 2.50 acres of land.

Quail Ridge
Country Estates Zoning

Job No. 2006-1175

EXHIBIT C

City Council Agenda

Approved for Agenda:
MJohnston
City Manager's Office

MEETING DATE: May 22, 2007

TO: CITY COUNCIL/CITY MANAGER

FROM: Cameron Walker, Planning Division Manager

SUBJECT: Z-07-014, Quail Ridge Zone Change

Purpose:

Hold a public hearing at 11:03 a.m. and consider an ordinance on a request by Banner Communities, LLC for a zone change from AE, Agriculture Estate District to PD, Planned District for a Housing Development.

Recommended City Council Action

☒ Approve ☐ Deny ☐ Direction/Informational

Fiscal Impact:

N/A

Discussion:

The City Council first considered a zone change request on the subject property on April 10, 2007. At that time, there was some neighborhood opposition, and the City Council was not comfortable with all issues. Consequently, the applicant withdrew his request. Later, he met with the neighbors and Council member Hailey. Based on these meetings, he has submitted a revised application. The Planning and Zoning Commission considered this new application on April 30, 2007, where it was recommended for approval by a vote of 9-0. The following is a summary of this plan, with significant changes to the plan highlighted.

The applicant owns a 43-acre tract of land at the northwest corner of Business I-20 and Chukar Lane. Prior to annexation in 1982, this land was developed as a manufactured home park with private streets, private water lines and septic systems. The applicant is proposing a redevelopment plan to develop a residential neighborhood consisting of modular housing. Also included are the subdivision of this land into individual lots, the dedication of public streets and the installation of public water and sewer lines. Each lot and the associated home would be under a common ownership. To accomplish this, the applicant is proposing a zone change to a Planned District for a Housing Development,

subject to the regulations of the 1F-3 District and a site plan.

18.40

18.41

18.42

18.43

City Council Agenda

Approved for Agenda:
rwpatrick
City Manager's Office

MEETING DATE: 4/28/2020

TO: City Council / City Manager

FROM: Michael Pacelli, City Traffic Engineer

SUBJECT: Consider an ordinance establishing intersection stops at various locations within the City of Midland, Texas; authorizing and directing the Traffic Engineer to install appropriate signs and markings at the designated locations; containing a cumulative clause; containing a savings and severability clause; providing for a maximum penalty or fine of two hundred dollars ($200.00); and ordering publication.

Purpose:

Consider an ordinance establishing intersection stops at various locations within the City of Midland, Texas; authorizing and directing the Traffic Engineer to install appropriate signs and markings at the designated locations; containing a cumulative clause; containing a savings and severability clause; providing for a maximum penalty or fine of two hundred dollars ($200.00); and ordering publication.

Recommended City Council Action

☒ Approve ☐ Deny ☐ Directional / Informational

Fiscal Impact:

Approximately $15,000 for the installation of new signs, including materials, equipment and labor.

Discussion:

The City Attorney's Office has prepared an ordinance authorizing the installation of stop signs at various intersections within the City of Midland. This ordinance has been requested to assign right-of-way at each intersection in compliance with the Texas Manual on Uniform Traffic Control Devices.

The most significant change is to ratify the removal of the traffic signal at Main St. and Scharbauer Dr., replacing it with all-way stop control. Data collection had shown that the traffic volumes were not high enough to meet minimum thresholds required by the state to justify the installation of a new signal. Analysis also indicated that overall delay at the intersection would be the same or less under stop control as compared to the signal, depending on the time of day.

The signal had multiple maintenance issues for a number of years due to age, and suffered additional damage in a vehicle crash on March 9th, with moderate repairs needed. This is in addition to the major upgrades needed to deal with the other issues that have accumulated over time. Also, TxDOT is providing funding to rebuild the culvert crossing over the channel in the next few years, but the City would be responsible for the cost of partially rebuilding this unwarranted traffic signal, which is expected to be an additional $300,000, on top of whatever is spent to repair the immediate issues.

Based on all of these factors, staff implemented all-way stop control and took the traffic signal out of service in mid-March.

Other notable changes are to convert existing two-way stop intersections to all-way stop at Pennsylvania Ave. and Jackson St., Whitney Dr. and Sentinel Dr., and at Eisenhower Dr. and Graceland Dr. These changes were requested by residents or schools and determined by staff to be appropriate based on engineering review of the conditions.

There are also 35 locations identified for the installation of new stop signs that are generally on newly constructed streets, streets planned for construction in the near future, or at locations for which no type of formal traffic control has previously existed.

The proposed locations for installation of new stop signs are as follows:

ON	AT
Baron Dr.	Occidental Pkwy.
Baron Dr.	Ranch Ave.
Beals Creek Dr.	Comal Dr.
Beals Creek Dr.	Heritage Oaks Dr.
Beals Creek Dr./Ct.	Pedernales Dr.
Bosque Dr.	Lampasas Dr.
Cardinal Ln.	Polo Club Rd.
Comal Dr.	Navasota Dr.
Costa Mesa Ln.	Navasota Dr.
Douglas Dr.	Boeing Dr.
Dunblane Dr.	Dumfries Rd.
Dunblane Dr.	Trobaugh Blvd.
Edinburgh Dr.	Dumfries Rd.
Edinburgh Dr.	Trobaugh Blvd.
Fairgrounds Rd.	Mockingbird Ln.
Fairgrounds Service Rd.	Rattler Ln.
Flicker Dr.	Sparhawk Dr.
Glasgow Dr.	Dumfries Rd.
Glasgow Dr.	Trobaugh Blvd.

Lampasas Dr.	Heritage Oaks Dr.
Leisure Dr.	Tradewinds Blvd.
Mockingbird Ln.	Fairgrounds Rd.
Ohio Ave.	Carrizo St.
Osprey Dr.	Beachwood St.
Osprey Dr.	Flicker Dr.
Overshine Ln.	Fairgrounds Rd.
Partridge St.	Baron Dr.
Partridge St.	Tin Tr.
Pedernales Dr.	Lampasas Dr.
Ranch Ave.	Tin Tr.
San Bernard Dr.	Pedernales Dr.
Sparhawk Dr.	Quail Ridge Rd.
Thomason Dr.	Tradewinds Blvd.
Trenton Dr.	Trobaugh Blvd.
Washita	Fairgrounds Rd.

Staff recommends approval of this ordinance.

ORDINANCE NO. _____

AN ORDINANCE ESTABLISHING INTERSECTION STOPS AT VARIOUS LOCATIONS WITHIN THE CITY OF MIDLAND, TEXAS; AUTHORIZING AND DIRECTING THE TRAFFIC ENGINEER TO INSTALL APPROPRIATE SIGNS AND MARKINGS AT THE DESIGNATED LOCATIONS; CONTAINING A CUMULATIVE CLAUSE; CONTAINING A SAVINGS AND SEVERABILITY CLAUSE; PROVIDING FOR A MAXIMUM PENALTY OR FINE OF TWO HUNDRED DOLLARS ($200.00); AND ORDERING PUBLICATION

WHEREAS, the Council finds that the unusual character and volume of traffic on various intersecting streets within the City require that operators of motor vehicles traveling along said streets stop before entering said intersections; and

WHEREAS, the Council finds it to be in the public interest to authorize and require the establishment of stop signs at said intersections;

NOW, THEREFORE, BE IT ORDAINED BY THE CITY COUNCIL OF THE CITY OF MIDLAND, TEXAS:

SECTION ONE. In addition to all other stop signs, stop signs at the intersections enumerated in the following list are hereby ordered to be erected and are hereby validated and fully authorized, whether the same have already been placed and are existing upon said intersections, or shall be placed there hereafter, and all persons operating vehicles upon or over the streets of the City of Midland shall obey such stop signs. All streets located in the column under the word "On" are the streets on which stop signs are hereby ordered and authorized at their intersection with the streets listed on the same line and in the column immediately to the right headed by the word "At".

ON	**AT**
"A" St.	Indiana Ave.
"A" St.	Missouri Ave.
"A" St.	Mockingbird Ln.
"A" St.	Solomon Ln.
Abbey Pl.	Everglade Ave.
Aberdeen Dr.	Cedar Springs Dr.
Aberdeen Dr.	Ruby Dr.
Aberdeen Dr.	Spraberry Dr.

ON	AT
Acklen Dr.	Roosevelt Dr.
Adams St.	Garden Ln.
Adams St.	Illinois Ave.
Adams St.	Indiana Ave.
Adams St.	Kentucky Ave.
Adams St.	New York Ave.
Adams St.	Pennsylvania Ave.
Adams St.	Wall St.
Adams St.	Walnut Ln.
Adams St.	Washington Ave.
Adonia St.	Cheyenne St.
Advance Ave.	Industrial Ave.
Ainslee St.	Bedford Dr.
Ainslee St.	Cuthbert Ave.
Ainslee St.	Kansas Ave.
Ainslee St.	Louisiana Ave.
Ainslee St.	Princeton Ave.
Airport 20 Rd.	La Force Blvd.
Alamo Dr.	Crockett Ave.
Alamosa Ct.	Gunnison Dr.
Alcove Ct.	Douglas St.
Alice St.	Barkley Ave.
Alice St.	Delano Ave.
Alice St.	Franklin Ave.
Alice St.	Kessler Ave.
Alice St.	Mariana Ave.
Alkan St.	Calumet St.
Alkan St.	Chaparral St.
Allandale Ct.	Sherwood Dr.
Allen St.	New Jersey Ave.
Allen St.	Taylor Ave.
Almey Ct.	Rustic Tr.
Almont Pl.	Gunnison Dr.
Alpine St.	Cuthbert Ave.
Alpine St.	Louisiana Ave.
Alta Ave.	Pecos St.
Amelia Dr.	Anetta Dr.
Amelia Dr.	Fairmont Dr.
Amigo Dr.	Goliad Dr.
Amigo Dr.	Storey Ave.
Andrews Hwy. Frontage	Godfrey St.
Andrews Hwy. Frontage	McDonald Ave.
Andover Ave.	Ward St.
Anetta Dr.	Eisenhower Dr.
Anetta Dr.	Raymond Rd.
Anetta Dr.	Spraberry Dr.
Anetta Dr.	Waverly Dr.
Angelina Dr.	Haynes Ave.
Angelina Dr.	Lehigh Dr.
Anthem Rd.	Bunker Hill Rd.

ON	AT
Apache Dr.	Holly Dr.
Apache Dr.	Waverly Dr.
Apperson Dr.	Maxwell Ave.
Apperson Dr.	Whitney Dr.
Apple Creek Rd.	Mathis St.
Apple Creek Rd.	Oak Valley Dr.
Arapahoe Rd.	Elkins Rd.
Arbor Cir.	Sunshine Pkwy.
Armadillo Dr.	Maverick Ln.
Armadillo Dr.	Prairie Rd.
Arrowhead Trail	Vista West Pkwy.
Arroyo Dr.	Haynes Ave.
Arroyo Dr.	Northfield Dr.
Ashwood Ct.	Heritage Blvd.
Aspen Dr.	Dentcrest Dr.
Aspen Dr.	Mark Ln.
Aster Ave.	Avalon Dr.
Aster Ave.	Golden Gate Dr.
Atlanta St.	California Ave.
Atlanta St.	Gist Ave.
Atlanta St.	Hicks Ave.
Atlanta St.	New York Ave.
Auburn Ct.	Ward St.
Auburn Dr.	Whitney Dr.
Auburn Pl.	Lanham St.
Audie Ct.	Beal Pkwy.
Aurora Way	Lumina Dr.
Aurora Ln.	McDonald Dr.
Aurora Ln.	Suncrest Ave.
Austin St.	Baumann Ave.
Austin St.	Bedford Dr.
Austin St.	Cuthbert Ave.
Austin St.	Kansas Ave.
Avalon Dr.	Briarwood Ave.
Avondale Dr.	Leddy Dr.
Avondale Dr.	McDonald Dr.
Avondale Dr.	Raymond Dr.
Azalea Ct.	Rosewood Dr.
“B” St.	Cuthbert Ave.
“B” St.	Gulf Ave.
“B” St.	Harvard Ave.
“B” St.	Indiana Ave.
“B” St.	Kansas Ave.
“B” St.	Louisiana Ave.
“B” St.	Michigan Ave.
“B” St.	Missouri Ave.
“B” St.	Tennessee Ave.
Baca St.	Mockingbird Ln.
Baca St.	San Miguel Ave.
Baird St.	California Ave.

ON	AT
Baird St.	Griffin Ave.
Baird St.	Hicks Ave.
Baird St.	Indiana Ave.
Baird St.	Kentucky Ave.
Baird St.	Longview Ave. (northbound)
Baird St.	Longview Ave. (southbound)
Baird St.	Louisiana Ave.
Baird St.	Main St.
Baird St.	Michigan Ave.
Baird St.	New Jersey Ave.
Baird St.	New York Ave.
Baird St.	Taylor Ave.
Baird St.	Washington Ave.
Baldwin St.	Brunson Ave.
Baldwin St.	College Ave.
Baldwin St.	Holloway Ave.
Baldwin St.	Indiana Ave.
Baldwin St.	Kentucky Ave.
Baldwin St.	Washington Ave.
Balfour Ct.	Deer Run Ave.
Balfour Ct.	Greathouse Ave.
Baltic Ave.	Dormard Ave.
Baltic Ave.	Pacific Ave.
Banks Dr.	La Force Blvd.
Banks Dr.	Sloan Field Blvd.
Barber St.	Cedar Ave.
Barber St.	Dormard Ave.
Barber St.	Golf Course Rd.
Barber St.	Hickory Ave.
Barber St.	Magnolia Ave.
Barber St.	Maple Ave.
Barber St.	Oak Ave.
Barber St.	Pecan Ave.
Barber St.	Pine Ave.
Barber St.	Shandon Ave.
Barber St.	Spruce Ave.
Barking Rock	Fall Creek
Barking Rock	Sister Creek
Barkley Ave.	Crestview Rd.
Barkley Ave.	Powell St.
Baron Dr.	Occidental Pkwy.
Baron Dr.	Ranch Ave.
Basswood Cir.	Sequoia Dr. (both intersections)
Barton Springs Ct.	Barton Creek Rd.
Bates Dr.	Sinclair Ave.
Baumann Ave.	Alpine St.
Baumann Ave.	Godfrey St.
Baumann Ave.	Kansas Ave.
Baumann Ave.	McDonald St.
Baybridge Ct.	Eastview Dr.

ON	AT
Baybridge Ct.	Westview Dr.
Baybrook Dr./Ct.	Rockwood Dr.
Baybrook Dr./Pl.	Valwood Dr.
Beachwood St.	Calumet St.
Beachwood St.	Chukar Ln.
Beal Pkwy.	Graceland Dr.
Beal Pkwy.	Leisure Dr.
Beal Pkwy.	Thomason Dr.
Beals Creek Dr.	Comal Dr.
Beals Creek Dr.	Heritage Oaks Dr.
Beals Creek Dr./Ct.	Pedernales Dr.
Beckley Dr.	Cedar Spring Dr.
Beckley Dr.	Sprayberry Dr.
Bedford Ave.	Alpine St.
Bedford Ave.	Austin St.
Bedford Dr.	“B” St.
Bedford Dr.	“D” St.
Bedford Ave.	Delmar St.
Bedford Ave.	E. Broadway St.
Bedford Ave.	“G” St.
Bedford Ave.	Godfrey St. (westbound)
Bedford Ave.	Idlewilde Dr.
Bedford Dr.	Lanham St.
Bedford Ave.	Maberry St.
Bedford Ave.	Manor St.
Bedford Ave.	McDonald St.
Bedford Dr.	Mogford St.
Bedford Ave.	“N” St.
Bedford Ave.	Tarleton St.
Bedford Dr.	W. Broadway St.
Bedford Dr.	Ward St.
Bedford Ave.	Woodcrest Dr.
Beechwood Ct.	Teakwood Tr.
Belair Dr.	Stonybrook Dr.
Bellechasse Ct.	Chapel Hill Dr.
Bellechasse Ct.	Fairview Ln.
Bellegrove Ct.	Keswick Rd.
Belmont St.	Collins Ave.
Belmont St.	Gist Ave.
Belmont St.	Griffin Ave.
Belmont St.	Hicks Ave.
Belmont St.	Longview Ave.
Belmont St.	Rhode Island Ave.
Belmont St.	Stokes Ave.
Belmont St.	Summit Ave.
Belmont St.	Wolcott Ave.
Belton Pl.	Concho Dr.
Benton St.	California Ave.
Benton St.	Golf Course Rd.
Benton St.	Indiana Ave.

ON	AT
Benton St.	Morgan Way
Benton St.	New York Ave.
Benton St.	Oak Ave.
Benton St.	Pine Ave.
Bentwood Dr.	Crescent Dr.
Bentwood Dr.	Cuthbert Ave.
Bentwood Dr.	Graceland Dr.
Bentwood Dr.	Ric Dr.
Berkeley Trail	Carpenter Way
Big Bend Country	Buffalo Gap
Billingsley Blvd.	Caldera Blvd.
Binney Cv.	Rex Rd.
Bishops Castle Dr.	Castleford Rd.
Blackwood Dr.	Homestead Blvd.
Blake Dr.	Garrett Dr.
Blake Dr.	Trennon Pl.
Blakemore Ct.	Northfield Dr.
Blanco Dr.	Llano Ct.
Blanco Dr.	Medina Dr.
Blanco Dr.	Oak Creek Dr.
Bluebird Ln.	Midkiff Rd.
Blue Bonnet Ave.	Avalon Dr.
Blue Bonnet Ave.	Golden Gate Dr.
Boeing Dr.	Fannin Ave.
Boeing Dr.	Neely Ave.
Boeing Dr.	Sentinel Dr.
Bonham St.	Cuthbert Ave.
Bonham St.	Kansas Ave.
Bonham St.	Willingham Dr.
Boot Dr.	Lone Star Ln.
Boot Dr	Red River Ln.
Bosque Dr.	Lampasas Dr.
Boulder Dr.	Arroyo Dr.
Boulder Dr.	Haynes Ave.
Bowie Dr.	Bentwood Dr.
Bowie Dr.	Edgewood Dr.
Bowie Dr.	Goliad Dr.
Bowman Cir.	Arapahoe Rd.
Boyd Ave.	“C” St.
Boyd Ave.	Cessna Dr.
Boyd Ave.	“D” St.
Boyd Ave.	Godfrey St.
Boyd Ave.	Lanham St.
Boyd Ave.	McDonald St.
Boyd Ave.	Mogford St.
Boyd Ave.	“N” St.
Boyd Ave.	Sinclair Ave.
Boyd Ave.	Sparks St.
Boyd Ave.	Tarleton St.
Boyd Ave.	Upland St.

ON	AT
Bradford Ct.	Knights Pl.
Brand Ln.	Buffalo Gap
Brand Ln.	Lone Star Ln.
Brazos Ave.	Amistad Dr.
Brazos Ave. / Ct.	Conroe St.
Brazos Ave.	Spence Dr.
Breckenridge Dr.	Durango Dr.
Breezeway Ct.	Bent Tree Tr.
Brentwood Dr.	Homestead Blvd.
Briaroaks Ct. / Dr.	Homestead Blvd.
Briarpath Dr.	Rosewood Dr.
Bridle Dr.	Rattler Ln.
Bridle Dr.	Wrangler Ln.
Brighton Pl.	Ashdown Pl.
Broadway St.	Cuthbert Ave.
Bromegrass	Beachwood St.
Bromley Pl.	Mayfield Pl.
Bronco Ct.	Buffalo Gap (both intersections)
Brookdale Dr.	Anetta Dr.
Brookdale Dr.	Bentwood Dr.
Brookdale Dr.	Eisenhower Dr.
Brooks Dr. (both intersections)	Raymond Rd.
Brown Heart Ln.	Deer Run Ave.
Brown Heart Ln.	Holiday Hill Rd.
Brown Heart Ln.	Riverside Dr.
Brownwood Dr.	Bentwood Dr.
Brunson Ave.	“L” St.
Brunson Ave.	Mann St.
Brunswick Cr.	Chapel Hill
Brush Dr.	Six Flags
Bryant St.	Eugene Ave.
Bryant St.	George Ave.
Bryant St	Hamby Ave.
Bryant St.	Hart Ave.
Bryant St.	Humble Ave.
Bryant St.	Jax Ave.
Buchanan Pl.	Rio Grande Ave.
Buffalo Ct.	Ranch Hand Dr.
Buffalo Gap	Lone Star Ln.
Buffalo Gap	Occidental Pkwy.
Buffalo Gap	Rattler Ln.
Bunche St.	California Ave.
Burchill Dr.	Anetta Dr.
Burchill Dr.	Brookdale Dr.
Burchill Dr.	Comanche Dr.
Burchill Dr.	Erie Dr.
Burchill Dr.	Parkdale Dr.
Burchill Dr.	Pasadena Dr.
Burchill Dr.	Pleasant Dr.
Burchill Dr.	Wilshire Dr.

ON	AT
Burgandy Dr.	Stonebridge Dr.
Burleson St.	Brunson Ave.
Burleson St.	College Ave.
Burleson St.	Holloway Ave.
Burleson St.	Kentucky Ave.
Burleson St.	Washington Ave.
Burnett Ln.	Lone Star Ln.
Butler Ave.	Baird St.
Butler Ave.	Main St.
Butternut Ln.	Jackson St.
Butternut Ln.	Oak Ave.
Butternut Ln.	Pecan Ave.
"C" St. (northbound traffic)	College Ave.
"C" St. (southbound traffic)	College Ave.
"C" St.	Cuthbert Ave.
"C" St.	Douglas Ave.
"C" St.	Golf Course Rd.
"C" St.	Gulf Ave.
"C" St. (northbound traffic)	Indiana Ave.
"C" St. (southbound traffic)	Indiana Ave.
"C" St.	Louisiana Ave.
"C" St.	Michigan Ave.
"C" St.	Missouri Ave.
"C" St.	Stanolind Ave.
Caldera Dr.	Melville Dr.
Calhoun St.	California Ave.
Calhoun St.	Indiana Ave.
Calhoun St.	Kentucky Ave.
Calhoun St.	Orchard Ln.
Calhoun St.	Pennsylvania Ave.
Calhoun St.	Washington Ave.
California Ave.	Camp St.
California Ave.	Carver St.
California Ave.	Dallas St.
California Ave.	Jackson St.
California Ave.	Main St.
California Ave.	Marienfeld St.
California Ave.	Tilden St.
California Ave.	Weatherford St.
California Ave.	Webster St.
Camarie Ave.	Lanham St.
Camarie Ave.	Mogford St.
Camarie Ave.	Tarleton St.
Camarie Ave.	Ward St.
Camarie Ave.	Whitney Dr.
Camino Reale	Crowley Blvd.
Camino Reale	Guadalupe St.
Camino Reale	Llano Ct.
Camp St.	Carter Ave.
Camp St.	Collins Ave.

ON	AT
Camp St.	Dakota Ave.
Camp St.	Francis Ave.
Camp St.	Griffin Ave.
Camp St.	Industrial Ave.
Camp St.	Marlin St.
Camp St.	New Jersey Ave.
Canadian Ave.	Amistad Dr.
Canadian Ave.	Spence Dr.
Candle Tree Cv.	Melville Dr.
Candlestick Dr.	Hall of Fame Blvd.
Canemont Dr.	Gleneagles Dr.
Canemont Dr.	Tremont Ave.
Canterbury Dr.	Kensington Ln.
Canterbury Dr.	Polo Pkwy.
Canyon Dr. (both intersections)	Raymond Rd.
Canyon/Devonian Dr.	Spraberry Dr.
Carbondale Ct.	Gunnison Dr.
Cardinal Ln.	Oriole Dr.
Cardinal Ln.	Polo Club Rd.
Carlton St.	Brunson Ave.
Carlton St.	College Ave.
Carlton St.	Holloway Ave.
Carlton St.	Kentucky Ave.
Carlton St.	Washington Ave.
Carmel Ct.	Llano Ct.
Carnation Ave.	Avalon Dr.
Carnation Ave.	Golden Gate Dr.
Carpenter Ct. / Way	Brown Heart Ln.
Carpenter Way	Oriole Dr.
Carrington Ct.	Rustic Tr.
Carrizo St.	Cuthbert Ave.
Carrizo St.	Louisiana Ave.
Carrizo St.	Michigan Ave.
Carrizo St.	Missouri Ave.
Carrizo St.	Nobles Ave.
Carrizo St.	Ohio Ave.
Carrizo St.	Storey Ave.
Carter Ave.	Garfield St.
Carver St.	Dormard Ave.
Carver St.	Golf Course Rd.
Carver St.	Indiana Ave.
Casa Grande Tr.	Guadalupe St.
Casa Grande Tr.	Llano Ct.
Casa Verde Ct.	San Clemente Dr.
Cascade Ct.	Douglas St.
Casper Ct.	Trevino St.
Castle Pine Rd.	Spence Dr.
Castleford Rd.	Chapel Hill Dr.
Castleford Rd.	Lancashire Rd.
Castleford Rd.	Los Alamitos Rd.

ON	AT
Castleford Rd.	Melville Dr.
Castleford Rd.	Polo Pkwy.
Castlerock Ct.	Durango Dr.
Cattleman Dr.	Lone Star Ln.
Cattleman Dr.	Occidental Pkwy.
Cattleman Dr.	Randolph Ln.
Cedar Ave.	Cottonwood Ave.
Cedar Ave.	Main St.
Cedar Ave.	Tyler St.
Cedar Creek Rd.	Cooper Creek Dr.
Cedar Creek Rd.	Stonebridge Dr.
Cedar Spring Dr.	Devonian Dr.
Cedar Spring Dr.	Raymond Rd.
Centerview	Greenridge
Centerview	Windrift
Century Dr.	Comanche Dr.
Cerrillos Ave.	Baca St.
Cerrillos Ave.	Magellan St.
Cessna Dr.	Fannin Ave.
Cessna Dr.	Neely Ave.
Cessna Dr.	Sentinel Dr.
Cessna Dr.	Shell Ave.
Cessna Dr.	Stanolind Ave.
Chadwick Ct.	Ridgefield Ct
Chapel Hill Dr.	Bluebird Ln.
Chapel Hill Dr.	Faulkner Dr.
Chapel Hill Dr.	Keswick Rd.
Chaparral St.	Beachwood St.
Chaps Ln.	Avalon Dr.
Chaps Ln.	Longhorn Ln.
Chatham Ct.	Ward St.
Checotah	Choctaw
Checotah	Kanawha
Chelsea Pl.	Mayfield Pl.
Chelsea Pl.	Whitman Dr.
Cherokee Dr.	Eisenhower Dr.
Cherry Ln.	Carver St.
Cherry Ln.	Tilden St.
Cherry Ln.	Tyler St.
Cherrywood Dr.	Briarpath Dr.
Cherrywood Dr.	Lemonwood Dr.
Cherrywood Dr.	Northcrest Dr.
Cherrywood Ct.	Oriole Dr.
Chesley Ct.	Rustic Tr.
Chestnut Ave.	Carver St.
Chestnut Ave.	Tilden St.
Cheyenne St.	Alkan St.
Chickasaw	Pueblo
Chickasaw	Tejas
Choate Pl.	Trinity Dr.

ON	AT
Choctaw	Navajo
Choctaw	Pueblo
Chon Cv.	Lindora Way
Chuck Wagon	Big Bend Country
Cimmaron Ave.	Dengar Ave.
Cimmaron Ave.	Godfrey St.
Cimmaron Ave.	"I" St.
Cimmaron Ave.	Mogford St.
Cimmaron Ave.	Lanham St.
Cimmaron Ave.	Mark Ln.
Cimmaron Ave.	McDonald Dr.
Cimmaron Ave.	Racquet Club Dr.
Cimmaron Ave.	Rees Ln.
Cimmaron Ave.	Shandon Ave.
Cimmaron Ave.	Tarleton St.
Cimmaron Ave.	Ward St.
Cimmaron Ave.	Wedgewood St.
Cimmaron Ave.	Ward St.
Cimmaron Ave.	Whitney Dr.
Cindy Pl.	Wydewood Dr.
Cisco St.	Arapahoe Rd.
Claremont Dr.	Mark Ln.
Claremont Dr.	Tremont Ave.
Clarewood Dr.	Greenville Cir.
Clarewood Dr.	Wood Dr.
Clark St.	Brunson Ave.
Clark St.	Franklin Ave.
Clark St.	Kentucky Ave.
Clark St.	Washington Ave.
Clay St.	California Ave.
Clay St.	Indiana Ave.
Clay St.	Orchard Ln.
Clayton Ct.	Whittle Way
Cloud Ave.	Edwards St.
Cloudcroft Ct.	Mark Ln.
Club Dr.	Crest Dr.
Club Dr.	Nobles Ave.
Co. Rd. 1220 S.	Industrial Ave.
Co. Rd. 83	Co. Rd. 1162
Coliseum Ct.	Riverfront Dr.
College Ave.	Clark St.
College Ave.	"G" St.
College Ave.	Indiana Ave.
Collins Ave.	Johnston St.
Collins Ave.	McKenzie St.
Collins Ave.	Main St.
Collins Ave.	Pratt St.
Colony Rd.	Arlington Rd.
Colony Rd.	Bunker Hill Rd.
Colony Rd.	Founders Rd.

ON	AT
Colony Rd.	Victory Pkwy.
Colorado St.	Collins Ave.
Colorado St.	Cuthbert Ave.
Colorado St.	Dakota Ave.
Colorado St.	Francis Ave.
Colorado St.	Gist Ave.
Colorado St.	Hicks Ave.
Colorado St.	Kansas Ave.
Colorado St.	Louisiana Ave.
Colorado St.	Michigan Ave.
Colorado St.	Missouri Ave.
Colorado St.	New Jersey Ave.
Colorado St.	New York Ave.
Colorado St.	Pennsylvania Ave.
Colorado St.	Rhode Island Ave.
Colorado St.	Stokes Ave.
Colorado St.	Taylor Ave.
Colorado St.	Washington Ave.
Colt Ct.	Candlestick Dr.
Columbian Dr.	Canyon Dr.
Columbian Dr.	Howard Dr.
Columbian Dr.	Waverly Dr.
Comal Dr.	Navasota Dr.
Comiskey Ct.	Riverfront Dr.
Commerce Dr.	I-20 N. Frontage Rd.
Commerce Dr.	Industrial Ave.
Commonwealth Rd.	Arlington Rd.
Commonwealth Rd.	Victory Pkwy.
Community Ln.	“D” St.
Community Ln.	“H” St.
Community Ln.	“J” St.
Community Ln.	“N” St.
Compton Dr.	Haynes Ave.
Compton Dr.	Lehigh Dr.
Concho Dr.	Amistad Dr.
Concho Dr.	Mathis St.
Concho Dr.	Spence Dr.
Concord Ave.	Lanham St.
Connell St.	Carter Ave.
Connell St.	Collins Ave.
Connell St.	Dakota Ave.
Connell St.	Griffin Ave.
Connell St.	Industrial Ave.
Connell St.	New Jersey Ave.
Connell St.	Taylor Ave.
Conquistador Ct.	Cerrillos Ave.
Conroe Ct.	Rio Grande Dr.
Conroe St.	Canadian Ave.
Conroe St.	Lavaca Ave.
Conroe St.	Rio Grande Dr.

ON	AT
Constitution Way	Patriot Pkwy.
Constitution Way	Victory Pkwy.
Convair Ct. / Dr. (both intersections)	Stonebridge Dr.
Convair Dr.	Torrey Vista Dr.
Cooper Creek Rd.	Solomon Ln.
Copper Sky Ct.	Daybreak Way
Copper Sky Ct.	Lumina Ct.
Copus St.	Pecan Ave.
Cord Dr.	Apperson Dr.
Corona	Costa Mesa
Coronado Ct.	Camino Reale
Corporate Dr.	Edwards St.
Corral Dr.	Buffalo Gap
Corral Dr.	Occidental Pkwy.
Corral Dr.	Yellow Rose Ct.
Corsair Ct.	Island Dr.
Costa Mesa Ln.	Escondido
Costa Mesa Ln.	Navasota Dr.
Costa Mesa Ln.	San Pedro
Cotton Flat Rd.	Industrial Ave.
Cotton Tail Ct.	Buffalo Gap
Cottonwood Ave.	Barber St.
Cottonwood Ave.	Edwards St.
Cottonwood Ave.	Golf Course Rd.
Cottonwood Ave.	Main St.
Country Club Dr.	“B” St.
Country Club Dr.	E. Broadway St.
Country Club Dr.	W. Broadway St.
Country Club Dr.	“D” St.
Country Club Dr.	Delmar St.
Country Club Dr.	“G” St.
Country Club Dr.	Idlewilde Dr.
Country Club Dr.	“L” St.
Country Club Dr.	Lanham St.
Country Club Dr.	Mogford St.
Country Club Dr.	“N” St.
Country Club Dr.	Ward St.
Country Club Dr.	Woodcrest Dr.
Courage Pl.	Founders Rd.
Courage Pl.	Victory Pkwy.
Courtney Ct.	Rustic Tr.
Cowboy Dr.	Lone Star Ln.
Cowden Ave.	Carver St.
Cowden Ave.	Dallas St.
Cowden Ave.	Edwards St.
Cowden Ave.	Jackson St.
Cowden Ave.	Main St.
Cranston Pl.	Crowley Blvd.
Crenshaw Dr.	Palmer Dr.
Crescent Dr.	Bentwood Dr.

ON	AT
Crescent Dr.	Dewberry Dr.
Crescent Dr.	Eisenhower Dr.
Crescent Dr.	Glenwood Dr.
Crest Dr.	Club Dr.
Crest Dr.	Ridglea Dr.
Crestdale St.	Crestgate Ave.
Crestdale St.	Crestwood Ave.
Crested Butte Ct.	Gunnison Dr.
Crestfield St.	Crestgate Ave.
Crestgate Ave.	Crestdale St.
Crestgate Ave.	Crestfield St.
Crestgate Ave.	Crestway Ln.
Crestgate Ave.	Gateway St.
Crestline Ave.	Crestway Ln.
Crestmont Dr.	Tremont Ave.
Crestmont Dr.	Whittle Way
Crestview Rd.	Delano Ave.
Crestview Rd.	Kansas Ave.
Crestview Rd.	Kessler Ave.
Crestview Rd.	Louisiana Ave.
Crestview Rd.	Mariana Ave.
Crestview Rd.	Michigan Ave.
Crestview Rd.	Ohio Ave.
Crestview Rd.	Roosevelt Ave.
Crestview Rd.	Storey Ave.
Crestview Rd.	Travis Ave.
Crestway Ln.	Crestgate Ave.
Crestwood Ave.	Crestfield St.
Crista Ln.	Bluebird Ln.
Crista Ln.	Caldera Blvd.
Crockett Ave.	Bentwood Dr.
Crockett Ave.	Edgewood Dr.
Crockett Ave.	Goliad Dr.
Crosley Ct.	Avalon Dr.
Crosley Ct.	Candlestick Dr.
Crowley Blvd.	Frio Dr.
Crowley Blvd.	Grassland Blvd.
Crowley Blvd.	Hereford Blvd.
Crowley Blvd.	Heritage Blvd.
Crowley Blvd.	Highland Blvd.
Crowley Blvd.	Rio Grande Ave.
Crowley Blvd.	Wadley Ave.
Crystal Sky Ln.	Daybreak Way
Culross Ln.	Berkeley Trail
Culross Ln.	Oriole Dr.
Culver Dr.	Fannin Ave.
Culver Dr.	Neely Ave.
Culver Dr.	Sentinel Dr.
Cumberland Dr.	Neely Ave.
Cumberland Dr.	Ventura Ave.

ON	AT
Cunningham Dr.	Canyon Dr.
Cunningham Dr.	Holly Dr.
Cunningham Dr.	Howard Dr.
Cunningham Dr.	Waverly Dr.
Cuthbert Ave.	Carver St.
Cuthbert Ave.	Jackson St.
Cuthbert Ave.	Maberry St.
Cuthbert Ave.	Main St.
Cuthbert Ave.	Mogford St.
Cypress Ct.	Teakwood Trace
"D" St.	College Ave.
"D" St.	Cuthbert Ave.
"D" St.	Douglas Ave.
"D" St.	Golf Course Rd.
"D" St.	Harvard Ave.
"D" St.	Humble Ave.
"D" St.	Indiana Ave.
"D" St.	Louisiana Ave.
"D" St.	Michigan Ave.
"D" St.	Missouri Ave.
"D" St.	Neely Ave.
Dahlia Ave.	Avalon Dr.
Dahlia Ave.	Golden Gate Dr.
Daisy Rd.	Victory Pkwy.
Dakota Ave.	Atlanta St.
Dakota Ave.	Baird St.
Dakota Ave.	Dallas St.
Dakota Ave.	Fort Worth St.
Dakota Ave.	Goode St.
Dakota Ave.	Jefferson St.
Dakota Ave.	Johnston St.
Dakota Ave.	"L" St.
Dakota Ave.	Main St.
Dakota Ave.	Marshall St.
Dakota Ave.	Mineola St.
Dakota Ave.	Terrell St.
Dakota Ave.	Weatherford St.
Dallas St.	Cuthbert Ave.
Dallas St.	Garden Ln.
Dallas St.	Golf Course Rd.
Dallas St.	Hamby Ave.
Dallas St.	Hicks Ave.
Dallas St.	Indiana Ave.
Dallas St.	Kansas Ave.
Dallas St.	Kentucky Ave.
Dallas St.	Michigan Ave.
Dallas St.	New Jersey Ave.
Dallas St.	New York Ave.
Dallas St.	Louisiana Ave.
Dallas St.	Nobles Ave.

ON	AT
Dallas St.	Ohio Ave.
Dallas St.	Parker Ave.
Dallas St.	Pennsylvania Ave.
Dallas St.	Taylor Ave.
Dallas St.	Washington Ave.
Dalton Dr.	Lanham St.
Dalton Dr.	Noel Ave.
Dartmouth Dr.	Culpeper Dr.
Dartmouth Dr.	Lanham St.
Daventry Rd.	Castleford Rd.
Daventry Rd.	Lancashire Rd.
Davies Ct.	Brown Heart Ln.
Davis Ave.	Adams St.
Davis Ave.	Carver St.
Davis Ave.	Lamesa Rd.
Davis Ave.	Lee St.
Dawn Cir. (both intersections)	Haynes Ave.
Daybreak Way	Moroni St.
Daybreak Way	Ojibwa
Daybreak Way	Ridge View St.
Daybreak Way	Sunrise Way
Deauville Blvd.	Avalon Dr.
Deauville Blvd.	Loop 250 Southbound Frontage Rd.
Deauville Blvd.	Tradewinds Blvd.
Debbie Cv.	Fredna Pl.
Deeanna Ln.	Crowley Blvd.
Deeanna Ln.	Hereford Blvd.
Deer Run Ave.	Hilltop Dr.
Deer Run Ave.	Riverside Dr.
Delaney	Val Verde Dr.
Delano Ave.	E. Circle Dr.
Delano Ave.	Holly Dr.
Delano Ave.	Powell St.
Delano Ave.	Roosevelt Dr.
Delano Ave.	Tanner Dr.
Dellwood St.	Baumann Ave.
Dellwood St.	Kansas Ave.
Delmar Dr.	Leddy Dr.
Delmar Dr.	Cuthbert Ave.
Delmar Dr.(northbound only)	Lockheed Ave.
Delmar St.	Storey Ave.
Dengar Ave.	Barber St.
Dengar Ave.	Edwards St.
Dengar Ave.	“I” St.
Dengar Ave.	Lanham St.
Dengar Ave.	Loma Dr.
Dengar Ave.	Main St.
Dengar Ave.	Mark Ln.
Dengar Ave.	Neely Ave.
Dengar Ave.	Pecos St.

ON	AT
Dengar Ave.	Tarleton St.
Dengar Ave.	Ward St.
Dengar Ave.	Whitney Dr.
Dengar Ave.	Wydewood Dr.
Dentcrest Dr.	Tremont Ave.
Dentcrest Dr.	Whittle Way
Dentcrest Dr. (southern most intersection)	Whittle Way
Dentcrest Dr.	Wydewood Dr.
Denton St.	Bedford Ave.
Denton St.	Cuthbert Ave.
Denton St.	Douglas Ave.
Desert Rose Dr. (both intersections)	Stonebridge Dr.
Desert Rose Dr.	Torrey Vista Dr.
Desta Dr. (both intersections)	Smith Rd.
Devlin Pl.	Crowley Blvd.
Devonian Dr.	Cedar Spring Rd.
Devonian Dr.	Monty Dr.
Devonian Dr.	Raymond Rd.
Devonian Dr.	Tanner Dr.
Devonshire Ct.	Richmond Dr.
Dewberry Dr.	Leisure Dr.
Dogwood Ct.	Driftwood Dr.
Donald St.	Illinois Ave.
Donald St.	Wall St.
Donald St.	Willeys Ave.
Dora Pl.	Neely Ave.
Dormard Ave.	Boardwalk
Dormard Ave.	Edwards St.
Dormard Ave.	Loma Ave.
Dormard Ave.	Main St.
Dormard Ave.	Pecos St.
Dorsey Ave.	Loma Dr.
Dorsey Ave.	Pecos St.
Douglas Ave.	Alpine St.
Douglas Ave.	Austin St.
Douglas Ave.	“B” St.
Douglas Dr.	Boeing Dr.
Douglas Dr.	Cessna Dr.
Douglas Dr.	Culver Dr.
Douglas Ave.	“D” St.
Douglas Ave.	Delmar Ave.
Douglas Ave.	“H” St.
Douglas Ave.	“J” St.
Douglas Ave.	“L” St.
Douglas Ave.	McDonald St.
Douglas Ave.	“N” St.
Douglas Ave.	Northrup Dr.
Douglas Ave.	Tarleton St.
Douglas Ave.	Upland St.
Douglas Ave.	Ward St.

ON	AT
Douglas Ave.	Whitney Dr.
Douglas Ave.	Woodcrest Dr.
Dowdle Dr.	Neely Ave.
Dowdle Dr.	Ventura Ave.
Downing Ave.	Norwood St.
Downing Ave.	Stratton Dr.
Drexel Ct.	Heritage Blvd.
Dukes Dr.	Polo Pkwy.
Dunbar St.	Cuthbert Ave.
Dunbar St.	Willingham Dr.
Dunblane Dr.	Dumfries Rd.
Dunblane Dr.	Trobaugh Blvd.
Dunkirk St.	Downing Ave.
Dunkirk St.	Lehigh Dr.
Dunraven Ct.	Deer Run Ave.
Durant Dr.	Maxwell Dr.
Durant Dr.	Ward St.
Durant Dr.	Whitney Dr.
Dyer Cir.	Haynes Ave.
"E" St.	College Ave.
"E" St.	Indiana Ave.
"E" St.	Missouri Ave.
"E" St.	Washington Ave.
E. Broadway St.	Cuthbert Ave.
E. Broadway St.	Harvard Ave.
E. Broadway St.	Louisiana Ave.
E. Broadway St.	Michigan Ave.
E. Broadway St.	Storey Ave.
E. Circle Dr.	Delano Ave.
E. Industrial Loop	Industrial Ave.
Earhart Dr. (both intersections)	La Force Blvd.
Edgewood Dr.	Monty Dr.
Eastview Dr.	Bluebird Ln. (northbound)
Eastwood Dr.	Ric Dr.
Eastwood Dr.	Storey Ave.
Edgebrook Dr./Ct.	Rockwood Dr.
Edgebrook Dr./Pl.	Valwood Dr.
Edgemont Dr.	Tremont Ave.
Edgemont Dr.	Whittle Way
Edgewood Dr.	Cuthbert Ave.
Edgewood Dr.	Dewberry Dr.
Edgewood Dr.	Eisenhower Dr.
Edgewood Dr.	Glenwood Dr.
Edinburgh Dr.	Dumfries Rd.
Edinburgh Dr.	Trobaugh Blvd.
Edwards St.	Cedar Ave.
Edwards St.	Cuthbert Ave.
Edwards St.	Dormard Ave.
Edwards St.	Golf Course Rd.
Edwards St.	Mississippi Ave.

ON	AT
Edwards St.	Oak Ave.
Edwards St.	Parker Ave.
Edwards St.	Pecan Ave.
Edwards St.	Pine Ave.
Edwards St.	Shandon Ave.
Edwards St.	Spruce Ave.
Eisenhower Dr.	Anetta Dr.
Eisenhower Dr.	Comanche Dr.
Eisenhower Dr.	Edgewood Dr.
Eisenhower Dr.	Graceland Dr.
Elizabeth Ave.	Baldwin St.
Elizabeth Ave.	Carlton St.
Elizabeth Ave.	Clark St.
Elizabeth Ave.	Key St.
Elizabeth Ave.	Mann St.
Elk Ave.	"B" St.
Elm Ave.	Barber St.
Elm Ave.	Edwards St.
Elm Ave.	Main St.
Elma Dr.	Aspen Dr.
Elma Dr.	Whittle Way
Elma Dr.	Wydewood Dr.
Emerson Dr. / Ct.	Lanham St.
Emerson Dr.	Ward St.
Emerson Ln.	Ward St.
Emerson Pl.	Whitney Dr.
English Dr.	Benton St.
English Dr.	Golf Course Rd.
Erie Dr.	Devonian Dr.
Erie Dr.	Eisenhower Dr.
Erie Dr.	Graceland Dr.
Erie Dr.	Meadow Dr.
Escondido	Frio Dr.
Estes Ave.	Carver St.
Estes Ave.	Colorado St.
Estes Ave.	Dallas St.
Estes Ave.	Jackson St.
Estes Ave.	Main St.
Estes Ave.	Marienfeld St.
Estes Ave.	Pecos St.
Estes Ave.	Whitaker St.
Eugene Ave.	Marienfeld St.
Everglade Ave.	Lindora Way
Everglade Ave.	Wydewood Dr.
Evergreen Ave.	Avalon Dr.
Evergreen Ave.	Golden Gate Dr.
Executive Ct.	Island Dr.
Exeter Ave.	Ward St.
"F" St.	College Ave.
"F" St.	Cuthbert Ave.

ON	AT
"F" St.	Indiana Ave.
"F" St.	Kentucky Ave.
"F" St.	Louisiana Ave.
"F" St.	Michigan Ave.
"F" St.	Missouri Ave.
Fairbanks Dr.	Mark Ln.
Fairfax Ct.	Ward St.
Fairfield Ln.	Mayfield Pl.
Fairfield Ln.	Whitman Dr.
Fairgate Dr.	Mark Ln.
Fairgrounds Rd.	Mockingbird Ln.
Fairgrounds Service Rd.	Rattler Ln.
Fairhaven Ct.	Whittle Way
Fairmont Dr.	Anetta Dr.
Fairmont Dr.	Waverly Dr.
Fairview Ln.	Castleford Rd.
Fairview Ln.	Chapel Hill Dr.
Fairview Ln.	Keswick Rd.
Fairwood Dr./Ct.	Rockwood Dr.
Fairwood Dr./Pl.	Valwood Dr.
Falcon Pl.	Concho Dr.
Fall Creek	Sandstone Dr.
Fannin Ave.	Dengar Ave.
Fannin Ave.	Lanham St.
Fannin Ave.	Mark Ln.
Fannin Ave.	McDonald Dr.
Fannin Ave.	Mogford St.
Fannin Ave.	Rees Ln.
Fannin Ave.	Tarleton St.
Fannin Ave.	Ward St.
Fannin Ave.	Whitney Dr.
Fargo Ave.	Boulder Dr.
Fargo Ave.	Norwood St.
Fargo Ave.	Stillmeadow Dr.
Fasken Dr.	Anetta Dr.
Fern Ave.	Avalon Dr.
Fern Ave.	Golden Gate Dr.
Fieldcrest Ln.	Northfield Dr.
Fieldcrest Ln.	Woodhaven Dr.
Fielder St.	Crestgate Ave.
Fields Pl.	Keswick Rd.
Fiesta Ave.	Edwards St.
Fisher St.	Francis Ave.
Flare Ct.	Lanham St.
Flatland Ct.	Brush Dr.
Flicker Dr.	Sparhawk Dr.
Floyd Ct.	Trevino St.
Fort Worth St.	California Ave.
Fort Worth St.	Cuthbert Ave.
Fort Worth St.	Gist Ave. (northbound)

ON	AT
Fort Worth St.	Golf Course Rd.
Fort Worth St.	Hicks Ave.
Fort Worth St.	Indiana Ave.
Fort Worth St.	Kentucky Ave.
Fort Worth St.	Longview Ave. (northbound)
Fort Worth St.	Louisiana Ave.
Fort Worth St.	Michigan Ave.
Fort Worth St.	Mississippi Ave.
Fort Worth St.	New Jersey Ave.
Fort Worth St.	New York Ave.
Fort Worth St.	Parker Ave.
Fort Worth St.	Peck Ave. (southbound)
Fort Worth St.	Pennsylvania Ave.
Fort Worth St.	Stokes Ave. (northbound)
Fort Worth St.	Stokes Ave. (southbound)
Fort Worth St.	Summit Ave. (northbound)
Fort Worth St.	Summit Ave. (southbound)
Fort Worth St.	Taylor Ave.
Fort Worth St.	Washington Ave.
Fort Worth St.	Wolcott Ave. (northbound)
Fort Worth St.	Wolcott Ave. (southbound)
Fortitude Ct.	Patriot Pkwy.
Founders Rd.	Commonwealth Rd.
Founders Rd.	Patriot Pkwy.
Fox Hollow Ct.	Greenbriar Dr.
Foxboro Ct.	Meadowpark Dr.
Francis Ave.	Baird St.
Francis Ave.	Belmont St.
Francis Ave.	Camp Dr.
Francis Ave.	Colorado St.
Francis Ave.	Main St.
Franklin Ave.	Crestview Rd.
Franklin Ave.	E. Circle Dr.
Franklin Ave.	Kelly St.
Franklin Ave.	Powell St.
Franklin Ave.	Williams St.
Fredna Pl.	Dengar Ave.
Fredna Pl.	Neely Ave.
Freeport Ln.	Nassau Dr.
Freeport Ln.	Shell Ave.
Friar Tuck Ct.	Widener Strp.
Friendship	Brush
Fringewood Dr.	Homestead Blvd.
Frontier Dr.	Fannin Ave.
Frontier Dr.	Lanham St.
Frontier Dr.	Ward St.
Frontier Dr.	Whitney Dr.
“G” St.	Bedford Ave.
“G” St.	Community Ave.
“G” St.	Cuthbert Ave.

ON	AT
"G" St.	Douglas Ave.
"G" St.	Golf Course Rd.
"G" St.	Harvard Ave.
"G" St.	Industrial Ave.
"G" St.	Louisiana Ave.
"G" St.	Michigan Ave.
"G" St.	Missouri Ave.
Gallop Ct.	San Francisco Ave.
Garden Ln.	Dallas St.
Garden Ln.	Fairgrounds Rd.
Garden Ln.	Fort Worth St.
Garden Ln.	Terrell St.
Garden Ln.	Tilden St.
Garfield St.	Bluebird Ln.
Garfield St.	Carter Ave.
Garrett Dr.	Navasota Dr.
Gaston Dr.	Delano Ave.
Gaston Dr.	Godfrey St.
Gaston Dr.	Monty Dr.
Gaston Dr.	Raymond Rd.
Gateway St.	Caldera Blvd.
George Ave.	Marienfeld St.
George Ave.	Pecos St.
George Yard Ct. / Ln.	Deer Run Ave.
Geraldine St.	Gulf Ave.
Geraldine St.	Neely Ave.
Geraldine St.	Shell Ave.
Gist Ave.	E. Industrial Loop
Gist Ave.	Main St.
Gist Ave.	Terrell St.
Gladewood Dr.	Homestead Blvd.
Gladewood Dr.	Prairie Ridge Dr.
Gladiola Ave.	Avalon Dr.
Gladiola Ave.	Golden Gate Dr.
Glasgow Dr.	Dumfries Rd.
Glasgow Dr.	Trobaugh Blvd.
Glen Mist Dr.	Fringewood Dr.
Glen Mist Dr.	Gladewood Dr.
Gleneagles Ct.	Greenbriar Dr.
Gleneagles Dr.	Greenbriar Dr.
Gleneagles Dr.	Mark Ln.
Glenwood Dr.	Edgewood Dr.
Glenwood Dr.	Leisure Dr.
Goddard Dr. / Ct.	Lanham St.
Goddard Dr.	Ward St.
Goddard Pl.	Meadowbrook Dr.
Goddard Pl.	Whitney Dr.
Godfrey St.	Avondale Dr.
Godfrey Ct.	Godfrey St.
Godfrey St.	Cuthbert Ave.

ON	AT
Godfrey St.	Douglas Ave.
Godfrey St.	Haynes Ave.
Godfrey St.	Louisiana Ave.
Godfrey St.	Neely Ave.
Godfrey St.	Northfield Dr.
Godfrey St.	Roosevelt Ave.
Godfrey St.	Shandon Ave.
Godfrey St.	St. Andrews Dr.
Godfrey St.	Tanner Dr.
Golden Gate Dr.	Briarwood Ave.
Golf Course Rd.	Elkins Rd.
Golf Course Rd.	Main St.
Golf Course Rd.(westbound)	Scharbauer Dr.
Goliad Dr.	Crockett Ave.
Goliad Dr.	Cuthbert Ave.
Goliad Dr.	Ric Dr.
Goode St.	Carter Ave.
Goode St.	Francis Ave.
Goode St.	Montgomery Ave.
Gossett St.	Indiana Ave.
Gossett St.	Missouri Ave.
Graceland Dr.	Beal Pkwy.
Graceland Dr.	Bentwood Dr.
Graceland Dr.	Eisenhower Dr.
Graham Dr.	Palmer Dr.
Grassland Blvd.	Crowley Blvd.
Grassland Blvd.	W. Heritage Blvd.
Greathouse Ave.	Brown Heart Ln.
Greathouse Ave.	Hilltop Dr.
Greathouse Ave.	Mathis St.
Greathouse Ave.	Spence Dr.
Greenbriar Ave.	Hyde Park Ave.
Greenbriar Dr.	Radcliff Ct.
Greenbriar Dr.	Springfield Ct.
Greenbriar Dr.	St. Andrews Dr.
Greenridge	Heritage Blvd.
Greenville Dr.	Valwood Dr.
Griffin Ave.	Colorado St.
Griffin Ave.	Dallas St.
Griffin Ave.	Fort Worth St.
Griffin Ave.	Goode St.
Griffin Ave.	Johnston St.
Griffin Ave.	Main St.
Griffin Ave.	Terrell St.
Griffin Ave.	Weatherford St.
Griffith Ct. / Dr.	Candlestick Dr. / Nolan Ryan Dr.
Griffith Dr.	Deauville Blvd.
Guadalupe St.	Frio Dr.
Guadalupe St.	Los Patios Dr.
Guadalupe St.	Rio Grande Ave.

ON	AT
Guadalupe St.	San Saba Ct.
Gulf Ave.	Cessna Dr.
Gulf Ave.	Culver Dr.
Gulf Ave.	“D” St.
Gulf Ave.	Godfrey St.
Gulf Ave.	Hughes St.
Gulf Ave.	Huntington St.
Gulf Ave.	“I” St.
Gulf Ave.	“L” St.
Gulf Ave.	Lanham St.
Gulf Ave.	McDonald Dr.
Gulf Ave.	Mark Ln.
Gulf Ave.	Mogford St.
Gulf Ave.	“N” St.
Gulf Ave.	Northrup Dr.
Gulf Ave.	Tarleton Dr.
Gulf Ave.	Ward St.
Gulf Ave.	Whitney Dr.
Gulf Ave.	Winfield Rd.
“H” St.	Bedford Dr.
“H” St.	College Ave.
“H” St.	Golf Course Rd.
“H” St.	Humble Ave.
“H” St.	Indiana Ave.
“H” St.	Michigan Ave.
“H” St.	Missouri Ave.
“H” St.	Neely Ave.
“H” St.	Ohio Ave.
“H” St.	Princeton Ave.
“H” St.	Tennessee Ave.
“H” St.	Washington Ave.
Hackberry Ct.	Teakwood Trace
Hagen Ct.	Beal Pkwy.
Half Moon Cir.	Riverside Dr.
Hall of Fame Blvd.	Arlington Rd.
Hall of Fame Blvd.	Avalon Dr.
Hall of Fame Blvd.	Riverfront Dr. / Shea Ln.
Hall of Fame Blvd.	Victory Pkwy.
Hamby Ave.	Carver St.
Hamby Ave.	Edwards St.
Hamby Ave.	Ft. Worth St.
Hamby Ave.	Jackson St.
Hamby Ave.	Main St.
Hamby Ave.	Marienfeld St.
Hamby Ave.	Tyler St.
Harlowe Dr.	Devonian Dr.
Harlowe Dr.	Mercedes Dr.
Harlowe Dr.	Monty Dr.
Harmony Dr.	Baumann Ave.
Harmony Dr.	Kansas Ave.

ON	AT
Hart Ave.	Main St.
Hart Ave.	Marienfeld St.
Harvard Ave.	Cessna Dr.
Harvard Ave.	"D" St.
Harvard Ave.	Delmar St.
Harvard Ave.	"H" St.
Harvard Ave.	Idlewilde Dr.
Harvard Ave.	"L" St.
Harvard Ave.	Lanham St.
Harvard Ave.	Maberry St.
Harvard Ave.	"N" St.
Harvard Ave.	Whitney Dr.
Harvard Ave.	Woodcrest Dr.
Harvest Rain Ct.	Moroni St.
Harvest Rain St.	Ojibwa St.
Harvest Rain St.	Ridge View St.
Harvest Rain St.	Valley View St.
Hathaway Ct.	Heritage Blvd.
Haynes Ave.	Godfrey St.
Haynes Ave.	Lanham St.
Haynes Ave.	Norwood St.
Haynes Ave.	Skyline Dr.
Haynes Ave.	Ward St.
Haynes Dr.	Ward St.
Haynes Dr.	Whitney Dr.
Haywood Dr.	Prairie Ridge Dr.
Heartland Ave.	Hereford Blvd.
Heartland Ave./Ct.	Heritage Blvd.
Heather Rd.	Castleford Rd. (both intersections)
Henderson St.	Rochester St.
Hereford Blvd.	Crowley Blvd.
Hereford Blvd.	Grassland Blvd.
Heritage Blvd.	Crowley Blvd.
Heritage Blvd.	Grassland Blvd.
Heritage Blvd.	Heartland Ave./Ct.
Heritage Blvd.	Highland Blvd.
Heritage Oak Dr.	Frio Dr.
Hernandez Ave.	Holdridge Rd.
Hickory Ave.	Benton St.
Hickory Ave.	Edwards St.
Hickory Ave.	Lincoln St.
Hickory Ave.	Tyler St.
Hicks Ave.	Camp St.
Hicks Ave.	Jefferson St.
Hicks Ave.	Johnston St.
Hicks Ave.	Main St.
Hicks Ave.	Moran St.
Hicks Ave.	Terrell St.
Highland Blvd.	Heritage Blvd.
Highsky Dr.	Hyde Park Ave.

ON	AT
Hill Ave.	Crestview Rd.
Hill Ave.	Holly Dr.
Hillcrest Ct.	Hereford Pl.
Hillcrest Ct.	Heritage Blvd.
Hillsboro Ct.	Meadowpark Dr.
Hilltop Dr.	Oriole Dr.
Hilltop Dr.	Riverside Dr.
Hodges St.	Community Ln.
Hodges St.	Neely Ave.
Hogan Ct.	Trevino St.
Hollandale Dr.	Carver St.
Hollandale Dr.	Parkway Dr.
Hollie Brook Pl.	Fairfield Ln.
Holloway Ave.	Clark St.
Holloway Ave.	“G” St.
Holloway Ave.	“H” St.
Holloway Ave.	Indiana Ave.
Holly Dr.	Raymond Rd.
Holly Dr.	Travis Ave.
Holmsley St.	Marienfeld St.
Holmsley St.	Pecos St.
Homeland Ct. / Dr.	Homestead Blvd.
Homestead Blvd.	Hereford Blvd.
Homestead Ct.	Homestead Blvd.
Honeysuckle Ln.	Corral Dr.
Honeysuckle Ln.	Lone Star Ln.
Hopi Ct.	Washita
Houston Ave.	Lee St.
Houston Ave.	Madison St.
Houston Ave.	Tyler St.
Howard Dr.(both intersections)	Raymond Rd.
Hoya Dr.	Rainbow Rd.
Hoya Dr.	Sunshine Pkwy.
Hudson Ave.	Pecan Ave.
Hughes St.	Fannin Ave.
Hughes St.	Neely Ave.
Humble Ave.	Cessna Dr.
Humble Ave.	Godfrey St.
Humble Ave.	Huntington St.
Humble Ave.	“I” St.
Humble Ave.	“L” St.
Humble Ave.	Lanham St.
Humble Ave.	Main St.
Humble Ave.	Mark Ln.
Humble Ave.	McDonald St.
Humble Ave.	“N” St.
Humble Ave.	Tarleton St.
Humble Ave.	Upland St.
Humble Ave.	Western Dr.
Huntington St.	Neely Ave.

ON	AT
Hyde Park Ave.	Ferncliff Ave.
Hyde Park Ave.	Godfrey St.
Hyde Park Ave.	Greenbriar Dr.
Hyde Park Ave.	Tarleton St.
“I” St.	Cimmaron Ave.
“I” St.	College Ave.
“I” St.	Golf Course Rd.
“I” St.	Holloway Ave.
“I” St.	Indiana Ave.
“I” St.	Kentucky Ave.
“I” St.	Missouri Ave.
“I” St.	Neely Ave.
“I” St.	Washington Ave.
I-20 N. Frontage Rd.	Midkiff Rd.
I-20 S. Frontage Rd.	Midkiff Rd.
Idlewilde Dr.	Cuthbert Ave.
Idlewilde Dr.	Preston Dr.
Idlewilde Dr.	Ric Dr.
Idlewilde Dr.	Storey Ave.
Idlewilde Dr.	Sunshine Pkwy.
Illinois Ave.	Carver St.
Illinois Ave.	Lee St.
Illinois Ave.	Terrell St.
Illinois Ave.	Thomason Dr.
Imperial Ave.	Cimmaron Ave.
Imperial Ave.	Godfrey St.
Imperial Ave.	Tarlton St.
Independence	Chuck Wagon
Indiana Ave.	Carlton St.
Indiana Ave.	Carver St.
Indiana Ave.	“G” St.
Indiana Ave.	“L” St.
Indiana Ave.	Lee St.
Indiana Ave.	Marienfeld St.
Indigo Sky Ct.	Daybreak Way
Industrial Ave.	Carver St.
Industrial Ave.	Lee St.
Industrial Ave.	Main St.
Industrial Ave.	Marienfeld St.
Inwood Ct.	Ward St.
Ironwood Dr.	Homestead Blvd.
Ironwood Dr.	Mosswood Dr.
Irwin Ct.	Crenshaw Dr.
Island Dr.	Greentree Blvd.
Island Dr.	Island Cir./Dr.
Island Dr. (northbound)	Island Cir./Dr.
Island Dr.	Rustic Tr.
“J” St.	College Ave.
“J” St.	Community Ave.
“J” St.	Golf Course Rd.

ON	AT
"J" St.	Harvard Ave.
"J" St.	Holloway Ave.
"J" St.	Kentucky Ave.
"J" St.	Missouri Ave.
"J" St.	Washington Ave.
Jackson St.	Cherry Ln.
Jackson St.	Chestnut Ave.
Jackson St.	Cuthbert Ave.
Jackson St.	Garden Ln.
Jackson St.	Golf Course Rd.
Jackson St.	Illinois Ave.
Jackson St.	Indiana Ave.
Jackson St.	Jax Ave.
Jackson St.	Kentucky Ave.
Jackson St.	New York Ave.
Jackson St.	Nobles Ave.
Jackson St.	Parker Ave.
Jackson St.	Pennsylvania Ave.
Jackson St.	Texas Ave.
Jackson St.	Wall St.
Jackson St.	Walnut Ln.
Jackson St.	Washington Ave.
Jacotte Cir. (both intersections)	Golf Course Rd.
Jadewood Dr.	Homestead Blvd.
Jax Ave.	Carver St.
Jax Ave.	Fort Worth St.
Jax Ave.	Main St.
Jax Ave.	Marienfeld St.
Jax Ave.	Terrell St.
Jax Ave.	Tilden St.
Jefferson St.	California Ave.
Jefferson St.	Gist Ave.
Jefferson St.	Indiana Ave.
Jefferson St.	Kentucky Ave.
Jefferson St.	New Jersey Ave.
Jefferson St.	New York Ave.
Jefferson St.	Pennsylvania Ave.
Jefferson St.	Wall St.
Jefferson St.	Washington Ave.
Jesse St.	Illinois Ave.
Jesse St.	Texas Ave.
Jesse St.	Wall St.
Johnston St.	Carter Ave.
Johnston St.	Francis Ave.
Johnston St.	Industrial Ave.
Johnston St.	Montgomery Ave.
Jordan Ave.	Godfrey Ct.
Jordan Ave.	Wedgewood St.
Joy Dr.	Bentwood Dr.
July Fourth Rd.	Colony Rd.

ON	AT
July Fourth Rd.	Vanguard Rd.
July Fourth Rd.	Victory Pkwy.
Juniper Ct.	Teakwood Trace
“K” St.	Carter Ave.
“K” St.	College Ave.
“K” St.	Community Ln.
“K” St.	Cuthbert Ave.
“K” St.	Francis Ave.
“K” St.	Golf Course Rd.
“K” St.	Griffin Ave.
“K” St.	Holloway Ave.
“K” St.	Industrial Ave.
“K” St.	Missouri Ave.
“K” St.	Washington Ave.
Kanawha	Navajo
Kanawha	Pueblo
Kansas Ave.	Alpine St.
Kansas Ave.	Baird St.
Kansas Ave.	E. Broadway
Kansas Ave.	“C” St.
Kansas Ave.	Carrizo St.
Kansas Ave.	“D” St.
Kansas Ave.	Delmar St.
Kansas Ave.	“F” St.
Kansas Ave.	Fort Worth St.
Kansas Ave.	“G” St.
Kansas Ave.	Godfrey St.
Kansas Ave.	McDonald St.
Kansas Ave.	Main St.
Kansas Ave.	Marienfeld St.
Kansas Ave.	Pecos St.
Kansas Ave.	Terrell St.
Kansas Ave.	W. Broadway
Keith St.	Cowden Ave.
Keith St.	Eugene Ave.
Keith St.	George Ave.
Keith St.	Hamby Ave.
Keith St.	Hart Ave.
Keith St.	Humble Ave.
Keith St.	Jax Ave.
Keith St.	Nobles Ave.
Keith St.	Parker Ave.
Kelly St.	Travis Ave.
Kensington Ln.	Polo Pkwy.
Kent St.	Kansas Ave.
Kent St.	Louisiana Ave.
Kent St.	Michigan Ave.
Kentucky Ave.	“B” St.
Kentucky Ave.	Bankhead Hwy.
Kentucky Ave.	Benton St.

ON	AT
Kentucky Ave.	"C" St.
Kentucky Ave.	Carver St.
Kentucky Ave.	Clark St.
Kentucky Ave.	Clay St.
Kentucky Ave.	"D" St.
Kentucky Ave.	"E" St.
Kentucky Ave.	"G" St.
Kentucky Ave.	"H" St.
Kentucky Ave.	"K" St.
Kentucky Ave.	Lamesa Rd.
Kentucky Ave.	Lee St.
Kentucky Ave.	Lincoln St.
Kentucky Ave.	Main St.
Kentucky Ave.	Marienfeld St.
Kentucky Ave.	Pecos St.
Kentucky Ave.	Stonewall St.
Kentucky Ave.	Tilden St.
Kentucky Ave.	Tyler St.
Kentucky Ave.	Webster St.
Keri Ct.	Noel Ave.
Kerth St.	Ohio Ave.
Kessler Ave.	Crestview Rd.
Kessler Ave.	Powell St.
Keswick Rd.	Melville Dr.
Key St.	Brunson Ave.
Key St.	Kentucky Ave.
Key St.	Washington Ave.
Keystone Ct.	Gunnison Dr.
Kilyn Ct.	Beal Pkwy.
Kimbrough St.	Delano Ave.
King Kelly Ct.	Mac Dr.
King Richards Row	Oriole Dr.
Kingsboro Ct. (both intersections)	Meadowpark Dr.
Kingston Dr.	Southampton Ln.
Kingwood Ct.	Valwood Dr.
Kiowa Dr.	Eisenhower Dr.
Kirkwood Dr.	Homeland Dr.
Knights Pl.	Castleford Rd.
"L" St.	Bedford Dr.
"L" St.	Carter Ave.
"L" St.	Cimmaron Ave.
"L" St.	College Ave.
"L" St.	Community Ave.
"L" St.	Cuthbert Ave.
"L" St.	Holloway Ave.
"L" St.	Humble Ave.
"L" St.	Kentucky Ave.
"L" St.	Louisiana Ave.
"L" St.	Michigan Ave.
"L" St.	Missouri Ave.

ON	AT
"L" St.	Neely Ave.
"L" St.	Shell Ave.
"L" St.	Sinclair Ave.
"L" St.	Stanolind Ave.
"L" St.	Warwick Pl.
"L" St.	Washington Ave.
La Force Blvd.	Sloan Field Blvd.
La Jolla Cv.	Guadalupe St.
La Salle Cir.	Mark Ln.
Lamesa Rd.	Indiana Ave.
Lampasas Dr.	Heritage Oaks Dr.
Lancashire Rd.	Castleford Rd.
Lancashire Rd.	Polo Parkway
Landon Ct.	Blake Dr.
Lanham St.	Ainslee St.
Lanham St.	Cimmaron Ave.
Lanham St.	Cuthbert Ave.
Lanham St.	Dartmouth Dr.
Lanham St.	Fannin Ave.
Lanham St.	Haynes Ave.
Lanham St.	Kansas Ave.
Lanham St.	Louisiana Ave.
Lanham St.	Maxwell Dr.
Lanham St.	Neely Ave.
Lanham St.	Princeton Ave.
Lanham St.	Shandon Ave.
Lanham St.	Shell Ave.
Lanham St.	Storey Ave.
Lanham St.	Ward St.
Laughlin Ct.	Corral Dr.
Laura Dr.	Bentwood Dr.
Laura Dr.	Edgewood Dr.
Laura Dr.	Goliad Dr.
Lavaca Ave.	Conroe St.
Lavaca Ave.	Spence Dr.
Lawson Ave.	"H" St.
League Dr.	Crowley Blvd.
Learmont Dr.	Chapel Hill Dr.
Learmont Dr.	Keswick Rd.
Leatherwood Dr.	Honeysuckle Ln.
Leddy Dr.	Cedar Spring Dr.
Leddy Dr.	Edgewood Dr.
Leddy Dr.	Harlowe Dr.
Leddy Dr.	Mercedes Dr.
Lee St.	California Ave.
Lee St.	Garden Ln.
Lee St.	New York Ave.
Lee St.	South Ln.
Lee St.	Walnut Ln.
Legends Blvd.	Wagner St./Dr.

ON	AT
Lehigh Dr.	Norwood St.
Leisure Dr.	Beal Pkwy.
Leisure Dr.	Bentwood Dr.
Leisure Dr.	Eisenhower Dr.
Leisure Dr.	Tradewinds Blvd.
Lennox Dr.	Fargo Ave.
Lennox Dr.	Westminster Dr.
Lexington St.	Concord Ave.
Liberty Ct.	Beal Pkwy.
Liberty Dr.	Starboard Dr.
Liddon Ave.	Bryant St.
Liddon Ave.	Keith St.
Liddon Ave.	Marienfeld St.
Lincoln St.	California Ave.
Lincoln St.	Cherry Ln.
Lincoln St.	Garden Ln.
Lincoln St.	Illinois Ave.
Lincoln St.	Indiana Ave.
Lincoln St.	New York Ave.
Lincoln St.	Oak Ave.
Lincoln St.	Orchard Ln.
Lincoln St.	Pecan Ave.
Lincoln St.	Pennsylvania Ave.
Lincoln St.	Pine Ave.
Lincoln St.	Texas Ave.
Lincoln St.	Wall St.
Lincoln St.	Washington Ave.
Lincoln St.	Willeys Ave.
Lincoln Green Ct.	Widener Strp.
Lindbergh Dr.	Banks Dr.
Lindbergh Dr.	Windecker St.
Lindbergh Dr.	Wright Dr.
Lindora Way	Sinclair Ave.
Lindora Way	Sunshine Pkwy.
Little John Ln.	Sherwood Dr.
Livingston St.	Rio Grande Ave.
Llano Ct.	Barton Creek Rd.
Llano Ct.	Crowley Blvd.
Llano Ct.	Frio Dr.
Llano Ct.	Los Patios Dr.
Llano Ct.	Rio Grande Ave.
Lockheed Dr.	Ainslee St.
Lockheed Ave.	Alpine St.
Lockheed Dr.	Boeing Dr.
Lockheed Dr.	Cessna Dr.
Lockheed Dr.	Culver Dr.
Lockheed Ave.	Denton St.
Lockheed Dr.	Lanham St.
Lockheed Dr.	Murray St.
Lockheed Dr.	Northrup Dr.

ON	AT
Lockheed Dr.	Sparks St.
Lockheed Dr.	Ward St.
Lockheed Dr.	Whitney Dr.
Locksley Ct.	Yorkshire Dr.
Logan Ct.	Beal Pkwy.
Logan Creek Rd.	Cooper Creek Rd.
Logan Creek Rd.	Stonebridge Dr.
Loma Dr.	Alta Ave.
Loma Dr.	Neely Ave.
Loma Dr.	Pecan Ave.
Loma Vista St.	Orchard Ln.
London Ct.	Yorkshire Dr.
Lone Oak	Peregrine Hill
Lone Oak	Sherwood Dr.
Lone Star Ln.	Buffalo Gap
Lone Star Ln.	Occidental Pkwy.
Longhorn Ln.	Montero Ln.
Longview Ave.	Baird St. (eastbound)
Longview Ave.	Baird St. (westbound)
Longview Ave.	Terrell St. (eastbound)
Loop 250 E. Frontage Rd.	Industrial Ave.
Loraine St.	California Ave.
Loraine St.	Collins Ave.
Loraine St.	Cowden Ave.
Loraine St.	Cuthbert Ave.
Loraine St.	Dakota Ave.
Loraine St.	Francis Ave.
Loraine St.	Gist Ave.
Loraine St.	Griffin Ave.
Loraine St.	Hamby Ave.
Loraine St.	Hicks Ave.
Loraine St.	Jax Ave.
Loraine St.	Kansas Ave.
Loraine St.	Louisiana Ave.
Loraine St.	Michigan Ave.
Loraine St.	Missouri Ave.
Loraine St.	New Jersey Ave.
Loraine St.	New York Ave.
Loraine St.	Pennsylvania Ave.
Loraine St.	Texas Ave.
Loraine St.	Wall St.
Loraine St.	Washington Ave.
Los Alamitos Dr.	Lancashire Rd.
Los Alamitos Ct.	Los Alamitos Dr.
Los Conchos Ln.	Avalon Dr.
Los Padres Dr.	Carmel Ct.
Los Padres Dr.	Los Patios Dr.
Los Patios Dr.	Crowley Blvd.
Los Patios Dr.	Holiday Hill Rd.
Louisiana Ave.	Alpine St.

ON	AT
Louisiana Ave.	Delmar St.
Louisiana Ave.	Lamesa Rd.
Louisiana Ave.	Main St.
Louisiana Ave.	McDonald Dr.
Lumina Dr.	Sunrise Way
Lynn Ave.	Carver St.
Lynn Ave.	Cottonwood Ave.
Lynn Ave.	Jackson St.
Lynn Ave.	Tyler St.
McClintic St.	Community Ave.
McClintic St.	Neely Ave.
McClintic St.	Southgate St.
McDonald Dr.	Bedford Ave.
McDonald Dr.	Cedar Spring Dr.
McDonald Dr.	Cimmaron Ave.
McDonald Dr.	Cuthbert Ave.
McDonald Dr.	Gulf Ave.
McDonald Dr.	Neely Ave.
McDonald Dr.	Ohio Ave.
McDonald Dr.	Kansas Ave.
McDonald Dr.	Shell Ave.
McDonald Dr.	Spraberry Dr.
McDonald Dr.	Tanner Dr.
McDonald St.	Greenbriar Dr.
McGarvey St.	Kentucky Ave.
McKenzie St.	Carter Ave.
McKenzie St.	Francis Ave.
McKenzie St.	Griffin St.
McKenzie St.	Montgomery Ave.
McKenzie St.	New Jersey Ave.
McKenzie St.	Taylor Ave.
“M” St.	Brunson Ave.
“M” St.	College Ave.
“M” St.	Holloway Ave.
“M” St.	Indiana Ave.
“M” St.	Kentucky Ave.
“M” St.	Louisiana Ave.
“M” St.	Michigan Ave.
“M” St.	Missouri Ave.
“M” St.	Ohio Ave.
“M” St.	Washington Ave.
Maberry St.	Cimmaron Ave.
Maberry St.	Country Club Dr.
Maberry St.	Cuthbert Ave.
Maberry St.	Fannin Ave.
Maberry St.	Frontier Dr.
Maberry St.	Kansas Ave.
Maberry St.	Neely Ave.
Maberry St.	Sinclair Ave.
Maberry St.	Storey Ave.

ON	AT
Mac Dr.	Mile High Ln.
Mac Dr.	Spahn St.
Madison St.	California Ave.
Madison St.	Garden Ln.
Madison St.	Illinois Ave.
Madison St.	Indiana Ave.
Madison St.	Industrial Ave.
Madison St.	Kentucky Ave.
Madison St.	New York Ave.
Madison St.	South Ln.
Madison St.	Wall St.
Madison St.	Walnut Ln.
Magnolia Ave.	Benton St.
Magnolia Ave.	Butternut Ln.
Magnolia Ave.	Edwards St.
Magnolia Ave.	Lincoln St.
Magnolia Ave.	Peterson St.
Maid Marian Ct.	Sherwood Dr.
Main St.	Cuthbert Ave.
Main St.	Gist Ave.
Main St.	Golf Course Rd.
Main St.	Scharbauer Dr.
MaMar Ave.	Cessna Dr.
Mann St.	Kentucky Ave.
Manor Ct.	Douglas Dr.
Manor St.	Cuthbert Ave.
Manor St.	Douglas Dr.
Manor St.	Storey Ave.
Maple Ave.	Benton St.
Maple Ave.	Butternut Ln.
Maple Ave.	Edwards St.
Maple Ave.	Lincoln St.
Maple Ave.	Peterson St.
Maple Ave.	Tyler St.
Marantha Pl.	Dengar Ave.
Mariana Ave.	Michigan Ave.
Mariana Ave.	Ohio Ave.
Mariana Ave.	Powell St.
Mariana Ave.	Roosevelt Ave.
Marienfeld St.	Carter Ave.
Marienfeld St.	Cowden Ave.
Marienfeld St.	Cuthbert Ave.
Marienfeld St.	Dakota Ave.
Marienfeld St.	Louisiana Ave.
Marienfeld St.	Michigan Ave.
Marienfeld St.	Missouri Ave.
Marienfeld St.	Nobles Ave.
Marienfeld St.	Ohio Ave.
Marienfeld St.	Parker Ave.
Mark Ln.	Dengar Ave.

ON	AT
Mark Ln.	Neely Ave.
Mark Ln.	Sinclair Ave.
Mark Ln.	St. Andrews Dr.
Mark Ln.	Whittle Way
Market St.	I-20 N. Frontage Rd.
Market St.	Industrial Ave.
Marmon Dr.	Maxwell Dr.
Marmon Dr.	Ward St.
Marmon Dr.	Whitney Dr.
Marshall St.	California Ave.
Marshall St.	Gist Ave.
Marshall St.	Hicks Ave.
Marshall St.	Indiana Ave.
Marshall St.	Kentucky Ave.
Marshall St.	New York Ave.
Marshall St.	Pennsylvania Ave.
Marshall St.	Texas Ave.
Marshall St.	Wall St.
Marshall St.	Washington Ave.
Mathis St.	Briarwood Ave.
Mathis St.	Canadian Ave.
Mathis St.	Spence Dr.
Maverick Ln.	Cattleman Dr.
Maverick Ln.	Cowboy Dr.
Maxwell Dr.	Lanham St.
Maxwell Dr.	Ward St.
Maxwell Dr.	Whitney Dr.
Mayfield Pl.	Mockingbird Ln.
Meadow Dr.	Anetta Dr.
Meadow Dr.	Brookdale Dr.
Meadow Dr.	Comanche Dr.
Meadow Dr.	Erie Dr.
Meadow Dr.	Graceland Dr.
Meadow Dr.	Parkdale Dr.
Meadow Dr.	Pasadena Dr.
Meadow Dr.	Pleasant Dr.
Meadowbrook Dr.	Moss Ave.
Meadowlark Ln.	Oriole Dr.
Meadowridge Ln.	Arroyo Dr.
Meadowridge Ln.	Skyline Dr.
Meadowwood Ct.	Spring Meadow Ct.
Medina Dr.	Barton Creek Rd.
Medina Dr.	Sabine Dr.
Megan Ct.	Garrett Dr.
Mel Ott Ln.	Mile High Ln.
Mel Ott Ln.	Spahn St.
Melville Dr.	Bluebird Ln.
Melville Dr.	Faulkner Dr.
Memorial Ct.	Riverfront Dr.
Mercedes Dr.	Devonian Dr.

ON	AT
Mercedes Dr.	Eisenhower Dr.
Meredith Pl.	Concho Dr.
Merrill Dr.	Norwood St.
Merrill Dr. / Ct.	Stratton Dr.
Mesa Dr.	Storey Ave.
Mesquite Ln.	Jackson St.
Mesquite Ln.	Lee St.
Mesquite Ln.	Lincoln St.
Mesquite Ln.	Tyler St.
Metz Ct.	Ward St.
Metz Dr.	Ward St.
Metz Dr.	Whitney Dr.
Metz Pl.	Lanham St.
Michigan Ave.	Alpine St.
Michigan Ave.	Delmar St.
Michigan Ave.	Godfrey St.
Michigan Ave.	Kent St.
Michigan Ave.	Lamesa Rd.
Michigan Ave.	Main St.
Michigan Ave.	McDonald St.
Michigan Ave.	Powell St.
Michigan Ave.	Terrell St.
Midkiff Rd.	Bluebird Ln.
Midkiff Rd.	I-20 N. Frontage Rd.
Midkiff Rd.	I-20 S. Frontage Rd.
Midkiff Rd.	Mockingbird Ln.
Midland Dr.	U.S. 80 Service Rd.
Mile High Ln.	Wagner Dr.
Miller Dr.	Crenshaw Dr.
Miller Dr./Ct.	Trevino St.
Milltown Rd.	Cooper Creek Rd.
Milltown Rd.	Stonebridge Dr.
Mimosa Ct.	Rosewood Dr.
Mineola St.	California Ave.
Mineola St.	Gist Ave.
Mineola St.	Hicks Ave.
Mineola St.	Indiana Ave.
Mineola St.	Kentucky Ave.
Mineola St.	New Jersey Ave.
Mineola St.	New York Ave.
Mineola St.	Pennsylvania Ave.
Mineola St.	Texas Ave.
Mineola St.	Wall St.
Mineola St.	Washington Ave.
Minuteman Rd.	Anthem Rd.
Mission Ct.	Godfrey St.
Mississippi Ave.	Baird St.
Mississippi Ave.	Dallas St.
Mississippi Ave.	Terrell St.
Missouri Ave.	“A” St.

ON	AT
Missouri Ave.	Carver St.
Missouri Ave.	Colorado St.
Missouri Ave.	“G” St.
Missouri Ave.	Jefferson St.
Missouri Ave.	Lee St.
Missouri Ave.	Loraine St.
Missouri Ave.	Madison St.
Missouri Ave.	Main St.
Missouri Ave.	Marienfeld St.
Missouri Ave.	Marshall St.
Missouri Ave.	Mineola St.
Mitchell St.	Delano Ave.
Mitchell St.	Franklin Ave.
Mockingbird Ln.	“A” St.
Mockingbird Ln.	Avalon Dr.
Mockingbird Ln.	Fairgrounds Rd.
Mockingbird Ln.	Midkiff Rd.
Mockingbird Ln.	Oriole Dr.
Mogford St.	Cimmaron Ave.
Mogford St.	Cuthbert Ave.
Mogford St.	Dengar Ave.
Mogford St.	Fannin Ave.
Mogford St.	Humble Ave.
Mogford St.	Kansas Ave.
Mogford St.	Lockheed Dr.
Mogford St.	Louisiana Ave.
Mogford St.	Michigan Ave.
Mogford St.	Neely Ave.
Mogford St.	Princeton Ave.
Mogford St.	Shandon Ave.
Mogford St.	Shell Ave.
Mogford St.	Sinclair Ave.
Mogford St.	Storey Ave.
Montero Ln.	Avalon Dr.
Montgomery Ave.	Belmont St.
Montgomery Ave.	Camp St.
Montgomery Ave.	Main St.
Monty Dr.	Leddy Dr.
Monty Dr.	McDonald St.
Monty Dr.	Mercedes Dr.
Monty Dr.	Raymond Rd.
Moran St.	Carter Ave.
Moran St.	Collins St.
Moran St.	Dakota Ave.
Moran St.	Francis St.
Moran St.	Griffin Ave.
Moran St.	Industrial Ave.
Moran St.	Montgomery Ave.
Moran St.	New Jersey Ave.
Moran St.	Taylor Ave.

ON	AT
Morgan Way	English Dr.
Morgan Way	Golf Course Rd.
Moroni St.	Lumina Ct.
Moroni St.	Overshine Ln.
Moss Ave.	Ward St.
Moss Ave.	Whitney Dr.
Mosswood Dr.	Brandy Hill Rd.
Mosswood Dr.	Homestead Blvd.
Mulberry Ln.	Madison St.
Mulberry Ln.	San Andres Dr.
Murray St.	Princeton Ave.
Musial Way	Avalon Dr.
Musial Way	O'Rourke St.
"N" St.	Bedford Dr.
"N" St.	Brunson Ave.
"N" St.	Carter Ave.
"N" St.	College Ave.
"N" St.	Community Ln.
"N" St.	Country Club Dr.
"N" St.	Cuthbert Ave.
"N" St.	Harvard Ave.
"N" St.	Holloway Ave.
"N" St.	Humble Ave.
"N" St.	Indiana Ave.
"N" St.	Kentucky Ave.
"N" St.	Louisiana Ave.
"N" St.	Michigan Ave.
"N" St.	Missouri Ave.
"N" St.	Neely Ave.
"N" St.	New Jersey Ave.
"N" St.	Rhode Island Ave.
"N" St.	Seaboard Ave.
"N" St.	Sinclair Ave.
"N" St.	Southgate St.
"N" St.	Washington Ave.
Nash Ave.	Copus St.
Nash Ave.	Hudson Ave.
Nassau Ct.	Geraldine St.
Nassau Dr.	Geraldine St.
Nasworthy Pl.	Rio Grande Ave.
Navajo Rd.	Shawnee
Navasota Dr.	Frio Dr.
Navasota Dr.	Llano Ct.
Navasota Dr.	Oak Creek Dr.
Navasota Dr.	Pedernales Dr.
Navasota Dr.	Rio Grande Ave.
Navasota Dr.	Sabine Dr.
Neely Ave.	Godfrey St.
Neely Ave.	"I" St.
Neely Ave.	Tarleton St.

ON	AT
Neely Ave.	Ward St.
Neely Ave.	Whittle Way
Neely Ave.	Wydewood Dr.
Neely Ct.	Neely Ave.
Neely Service Rd.	Cumberland Dr.
Neely Service Rd.	"D" St.
Neely Service Rd.	Oaklawn Dr.
Nevan Ct.	Beal Pkwy.
New Jersey Ave.	Camp St.
New Jersey Ave.	Johnston St.
New Jersey Ave.	"L" St.
New Jersey Ave.	Main St.
New Jersey Ave.	Marshall St.
New Jersey Ave.	McKenzie St.
New Jersey Ave.	Terrell St.
New Jersey Ave.	Wayside Dr.
New York Ave.	Calhoun St.
New York Ave.	Carver St.
New York Ave.	Clay St.
New York Ave.	Industrial Ave.
New York Ave.	Main St.
New York Ave.	Marienfeld St.
New York Ave.	Tilden St.
Newcastle Dr.	Wellington Ct.
Nicklaus St.	Crenshaw Dr.
Nobles Ave.	Carver St.
Nobles Ave.	Edwards St.
Nobles Ave.	Main St.
Nobles Ave.	Pecos St.
Nobles Ave.	Tilden St.
Noel Ave.	Lanham St.
Noel Ave.	Ward St.
Nolan Ryan Dr.	Legends Blvd.
Norman	Bankhead Hwy.
Normandy Ln.	Polo Pkwy.
Normandy Ln.	Stoneleigh Dr.
North Service Rd.	Windecker St.
Northcrest Dr.	Hilltop Dr.
Northfield Ct.	Godfrey St.
Northfield Dr.	Godfrey St.
Northfield Dr.	Skyline Dr.
Northgate Ave.	Briarwood Ave.
Northgate Ave.	Northcrest Dr.
Northrup Dr.	Fannin Ave.
Northrup Dr.	Neely Ave.
Northrup Dr.	Princeton Dr.
Northrup Dr.	Sentinel Dr.
Northtown Ct.	Lanham St.
Northtown Pl.	Meadowbrook Dr.
Northtown Pl.	Whitney Dr.

ON	AT
Norwood St.	Lehigh Dr.
Norwood St.	St. Andrews Dr.
Nottingham Ln.	Sherwood Ln.
Nottingham Ln.	Widener Strp.
"O" St.	Missouri Ave.
Oak Ave.	Benton St.
Oak Ave.	Butternut Ln.
Oak Ave.	Main St.
Oak Valley Dr.	Greathouse Ave.
Oak Valley Dr.	Oriole St.
Oak Valley Dr.	Spence Dr.
Oaklawn Dr.	Neely Ave.
Oaklawn Dr.	Ventura Ave.
Oakmont Dr.	Tremont Ave.
Oakmont Dr.	Whittle Way
Oakridge Dr. / Ct.	Gateway St.
Ohio Ave.	Alpine St.
Ohio Ave.	Baird St.
Ohio Ave.	"C" St.
Ohio Ave.	Carrizo St.
Ohio Ave.	"D" St.
Ohio Ave.	Delmar St.
Ohio Ave.	"F" St.
Ohio Ave.	Fort Worth St.
Ohio Ave.	"G" St.
Ohio Ave.	Godfrey St.
Ohio Ave.	"L" St.
Ohio Ave.	Main St.
Ohio Ave.	Marienfeld St.
Ohio Ave.	Mineola St.
Ohio Ave.	"N" St.
Ohio Ave.	Powell St.
Ohio Ave.	Weatherford St.
Ojibwa St.	Daybreak Way
Ojibwa St.	Overshine Ln.
Ojibwa	Pueblo
Ojibwa	Tejas
Olympic Ct.	Candlestick Dr.
Onyx Dr.	Farm-to-Market Rd. 1788
Orchard Ln.	Carver St.
Orchard Ln.	Lee St.
Oriental Ave.	Ventnor Ave.
Oriole Dr.	Mockingbird Ln.
Oriole Dr.	Tanforan Ave.
Oriole Dr.	Teakwood Trc.
Osage St.	Spruce Ave.
Osprey Dr.	Beachwood St.
Osprey Dr.	Flicker Dr.
Overshine Ln.	Fairgrounds Rd.
Overshine Ln.	Harvest Rain St.

ON	AT
Overshine Ln.	Sunrise Way
Oxford St.	Ohio Ave.
Pacific Ave.	Boardwalk
Pacific Ave.	Carver St.
Pagewood Dr.	Prairie Ridge Dr.
Palmer Dr.	Nicklaus St.
Paradise Ln.	Island Dr.
Park Ln.	Holly Dr.
Parker Ave.	Carver St.
Parker Ave.	Main St.
Parker Ave.	Tilden St.
Parker Ave.	Tyler St.
Parkhurst Dr.	Fargo Ave.
Parkhurst Dr.	Westminster Dr.
Parkwood Dr.	Brownwood Dr.
Parton Way	Mayfield Pl.
Parton Way	Whitman Dr.
Partridge St.	Baron Dr.
Partridge St.	Tin Tr.
Pasadena Dr.	Eisenhower Dr.
Pasadena Dr.	Spraberry Dr.
Patman Pl.	Concho Dr.
Patrick Pl.	Mayfield Pl.
Patrick Pl.	Semper Fidelis
Patriot Pkwy.	Avalon Dr.
Peach St.	Kessler Ave.
Pebble Ct.	Bent Tree Tr.
Pecan Ave.	Cumberland Dr.
Pecan Ave.	“D” St.
Pecan Ave.	“I” St.
Pecan Ave.	“L” St.
Pecan Ave.	Main St.
Pecan Ave.	Oaklawn Dr.
Pecan Ave.	Pecos St.
Pecan Ave.	Tyler St.
Peck Ave.	Baird St. (westbound)
Peck Ave.	Terrell St. (eastbound)
Pecos St.	Boyd Ave.
Pecos St.	Cuthbert Ave.
Pecos St.	Dormard Ave.
Pecos St.	Indiana Ave.
Pecos St.	Industrial Ave.
Pecos St.	Liddon Ave.
Pecos St.	Louisiana Ave.
Pecos St.	Michigan Ave.
Pecos St.	Missouri Ave.
Pecos St.	Neely Ave.
Pecos St.	Ohio Ave.
Pecos St.	Spruce Ave.
Pecos St.	Storey Ave.

ON	AT
Pecos St.	Tennessee Ave.
Pedernales Dr.	Crowley Blvd.
Pedernales Dr.	Lampasas Dr.
Pedernales Dr.	Llano Ct.
Pedernales Dr.	Medina Dr.
Pedernales Dr.	San Saba Ave.
Pennsylvania Ave.	Atlanta St.
Pennsylvania Ave.	Baird St.
Pennsylvania Ave.	Benton St.
Pennsylvania Ave.	Camp St.
Pennsylvania Ave.	Carver St.
Pennsylvania Ave.	Clay St.
Pennsylvania Ave.	Jackson St.
Pennsylvania Ave.	Lamesa Rd.
Pennsylvania Ave.	Main St.
Pennsylvania Ave.	Marienfeld St.
Pennsylvania Ave.	Tilden St.
Pennsylvania Ave.	Tyler St.
Pentagon Rd.	Commonwealth Rd.
Peregrine Hill	Delaney
Permian Ct.	Manor St.
Peterson St.	Oak Ave.
Peterson St.	Pecan Ave.
Phillip Pl.	Preston Dr.
Pilot Ave.	La Force Blvd.
Pilot Ave.	Wright Dr.
Pimlico Dr.	Tattenham Corner
Pine Ave.	Cumberland Dr.
Pine Ave.	“I” St.
Pine Ave. (westbound only)	“L” St.
Pine Ave.	Loma Dr.
Pine Ave.	Main St.
Pine Ave.	Neely Ave.
Pine Ave.	Oaklawn Dr.
Pine Ave.	Pecos St.
Pine Ave.	Peterson St.
Pine Meadow Dr.	Meadowpark Dr.
Pinemont Dr.	Springmont Dr.
Pinemont Dr.	Tremont Ave.
Pinewood Ct.	Pine Meadow Dr.
Pinion Ct.	Sunburst Dr.
Placid Ct.	Manor St.
Player Ct.	Trevino St.
Plaza St.	E. Circle Dr.
Pleasant Dr.	Bentwood Dr.
Pleasant Dr.	Eisenhower Dr.
Pleasant Dr.	Raymond Rd.
Pleasant Dr.	Waverly Dr.
Pliska Dr.	North Service Rd.
Polo Club Dr.	Bluebird Ln.

ON	AT
Polo Club Dr.	Polo Pkwy.
Polo Parkway	Lancashire Dr.
Porterfield Rd.	Cooper Creek Rd.
Porterfield Rd.	Stonebridge Dr.
Potomac Pkwy.	Victory Pkwy.
Powell St.	Kansas Ave.
Powell St.	Louisiana Ave.
Powell St. (northern most intersection only)	Mariana Ave.
Prairie Rd.	Cattleman Dr.
Prairie Rd.	Cowboy Dr.
Prairie Ridge Dr.	Jadewood Dr.
Pratt St.	Carter Ave.
Pratt St.	Dakota Ave.
Pratt St.	Francis Ave.
Pratt St.	New Jersey St.
Pratt St.	Taylor Ave.
Preston Dr.	Aspen Dr.
Preston Dr.	Sunburst Dr.
Preston Dr.	Whittle Way
Preston Dr.	Wydewood Dr.
Princeton Ave.	Alpine St.
Princeton Ave.	Austin St.
Princeton Ave.	“B” St.
Princeton Ave.	Boeing Dr.
Princeton Ave.	Cessna Dr.
Princeton Ave.	“D” St.
Princeton Ave.	Delmar St.
Princeton Ave.	Denton St.
Princeton Ave.	“G” St
Princeton Ave.	Godfrey St.
Princeton Ave.	Idlewilde Dr.
Princeton Ave.	“J” St.
Princeton Ave.	“L” St.
Princeton Ave.	Maberry St.
Princeton Ave.	McDonald St.
Princeton Ave.	“N” St.
Princeton Ave.	Tarleton St.
Princeton Ave.	Ward St.
Princeton Ave.	Whitney Dr.
Princeton Ave.	Woodcrest Dr.
Purple Sage Trl.	Whitman Dr.
Pylant St.	Ohio Ave.
Queens Ct.	Sherwood Dr.
Quicksand Dr.	Mathis St.
Quicksand Dr.	Spence Dr.
Racquet Club Dr.	Cimmaron Dr.
Racquet Club Dr.	Neely Ave.
Radcliff Ct.	Greenbriar Dr.
Railea Ct.	Beal Pkwy.
Rainbow Rd.	Idlewilde Dr.

ON	AT
Rainbow Rd.	Sunburst Dr.
Ranch Ave.	Tin Tr.
Ranch Hand Dr.	Maverick Ln.
Randolph Ln.	Cowboy Dr.
Randolph Ln.	Ranch Hand Dr.
Rangers Ct.	Candlestick Dr.
Raymond Rd.	Anetta Dr.
Raymond Rd. (southernmost intersection)	Canyon Dr.
Reading Ave.	Stratton Dr.
Rebel Dr.	Cimmaron Ave.
Rebel Dr.	Godfrey St.
Red River Ln.	Cattleman Dr.
Red River Ln.	Cowboy Dr.
Redbud Ct.	Randolph Ln.
Redwood Run	Teakwood Trc.
Rees Ln.	Dengar Ave.
Rees Ln.	Neely Ave.
Reeves Cir.	Anetta Dr.
Regal Pl.	Everglade Ave.
Reo Dr.	Auburn Dr.
Republic Dr.	Brand Ln.
Republic Dr.	Rattler Ln.
Revolution Dr. (both intersections)	Brand Ln.
Rex Rd.	Brown Heart Ln.
Rex Rd.	George Yard Ln.
Rhett Dr.	Stonebridge Dr.
Rhett Dr.	Torrey Vista Dr.
Rhode Island Ave.	Camp St.
Rhode Island Ave.	Colorado St.
Rhode Island Ave.	Connell St.
Rhode Island Ave.	Johnston St.
Rhode Island Ave.	“L” St.
Rhode Island Ave.	McKenzie St.
Rhode Island Ave.	Moran St.
Rhode Island Ave.	Pratt St.
Ric Dr.	Bentwood Dr.
Ric Dr.	Edgewood Dr.
Ric Dr.	Stoneybrook Dr.
Ric Dr.	Storey Ave.
Richmond Dr. / Ct.	Castleford Rd.
Ridgeboro Ct.	Ridgefield Ct.
Ridgemont Pl.	Hereford Blvd.
Ridgemont Ct.	Heritage Blvd.
Ridglea Dr.	Cuthbert Ave.
Ridglea Dr.	Nobles Ave.
Rio Grande Ave.	Crowley Blvd.
Rio Grande Ave.	Frio Dr.
Rio Grande Dr.	Amistad Dr.
Rio Grande Dr.	Conroe St.
Riverfront Dr.	Wagner Dr.

ON	AT
Riverside Dr.	Brown Heart Ln.
Riverside Dr.	Holiday Hill Rd.
Riverside Dr.	Oak Valley Dr.
Robin Ln.	Oriole Dr.
Robin Hood Ct.	Sherwood Dr.
Rochester St.	Bankhead Hwy.
Rockwood Dr.	Tanforan Ave./Ct.
Rockylane Dr.	Leisure Dr.
Rodeo St.	Cerrillos Ave.
Rodeo St.	E. Mockingbird Ln.
Roosevelt Ave.	Mitchell St.
Roosevelt Ave.	Powell St.
Roosevelt Dr.	Crestview Rd.
Roosevelt Dr.	Edgewood Dr.
Roosevelt Dr.	Leddy Dr.
Roosevelt Dr.	McDonald Dr.
Roosevelt Dr.	Mercedes Dr.
Roosevelt Dr.	Raymond Rd.
Rosemont Dr.	Sagemont Dr.
Rosemont Dr.	Tremont Ave.
Rosewood Dr.	Lemonwood Dr.
Rosewood Dr.	Northcrest Dr.
Rosewood Dr.	Oriole Dr.
Rosita Dr.	Alicia Ct.
Ruby Dr.	Canyon Dr.
Ruby Dr.	Raymond Rd.
Ruidoso Ct.	Mark Ln.
Russell Dr.	Norwood St.
Russell Dr. / Ct.	Stratton Dr.
Rustic Trail	Greentree Blvd. (at east and west intersections)
Sabine Dr.	Crowley Blvd.
Saddle Ct.	Burnett Ln.
Saddle Horn Ln.	Avalon Dr.
Saddle Horn Ln.	Longhorn Ln.
Sage St.	Hollandale Dr.
Sagemont Dr.	Pinemont Dr.
Sagemont Dr.	Tremont Ave.
Salisbury Pl.	Trinity Dr.
Saltillo Ct.	Camino Reale
San Angelo St.	Louisiana Ave.
San Angelo St.	Michigan Ave.
San Angelo St.	Tennessee Ave.
San Antonio Ave.	Amistad Dr.
San Antonio Ave.	Conroe St.
San Antonio Ave.	Spence Dr.
San Bernard Dr.	Pedernales Dr.
San Carlos Ct.	San Clemente Dr.
San Clemente Dr.	Guadalupe St.
San Clemente Dr.	Llano Ct.

ON	AT
San Diego Ct.	Frio Dr.
San Francisco Ave.	Baca St.
San Francisco Ave.	Magellan St.
San Francisco Ave.	Rodeo St.
San Miguel Ave. / Ct.	Magellan St.
San Miguel Ave.	San Francisco Ave.
San Pedro	Briarwood Ave.
San Pedro	Frio Dr.
San Pedro Ct.	Camino Reale
San Saba Ave.	Crowley Blvd.
Sand Hill Cr.	Vista West Pkwy.
Sandelwood St.	Baumann Ave.
Sandelwood St.	Kansas Ave.
Sands St.	Gulf Ave.
Santa Clarita	Corona
Santa Clarita	San Pedro
Santa Rosa	Briarwood Ave.
Santa Rosa	Frio Dr.
Savoy Pl.	Mayfield Pl.
Savoy Pl.	Whitman Dr.
Scharbauer Dr.	Main St.
Scottsboro Ln.	Rustic Tr.
Seaboard Ave.	Cessna Dr.
Seaboard Ave.	Godfrey St.
Seaboard Ave.	“H” St.
Seaboard Ave.	Huntington St.
Seaboard Ave.	“I” St.
Seaboard Ave.	“L” St.
Seaboard Ave.	Lanham St.
Seaboard Ave.	Mogford St.
Seaboard Ave.	“N” St.
Seaboard Ave.	Tarleton St.
Seaboard Ave.	Whitney Dr.
Secor St.	Ohio Ave.
Sedona	Frio Dr.
Seminole Dr.	Eisenhower Dr.
Semper Fidelis	Chelsea Pl.
Semper Fidelis	Fairfield Ln.
Sentinel Ave.	Alpine St.
Sentinel Ave.	Delmar St.
Sentinel Ave.	Denton St.
Sentinel Ave.	Tarleton St.
Sentinel Ave.	Upland St.
Sentinel Dr.	Maberry St.
Sentinel Dr.	Murray St.
Sentinel Dr.	Whitney Dr.
Sequoia St.	Green Tree Blvd.
Shady Oak Ct.	Teakwood Trace
Shadylane Dr.	Bentwood Dr.
Shadyview Pl.	Tanforan Ave.

ON	AT
Shandon Ave.	Cimmaron Ave.
Shandon Ave.	Godfrey St.
Shandon Ave.	Lanham St.
Shandon Ave.	Loma Dr.
Shandon Ave.	Main St.
Shandon Ave.	Mogford St.
Shandon Ave.	Pecos St.
Shandon Ave.	Tarleton St.
Shandon Ave.	Ward St.
Shandon Ave.	Whitney Dr.
Shawnee	Pueblo
Shawnee	Wrangler Ln.
Shell Ave.	"C" St.
Shell Ave.	"D" St.
Shell Ave.	Godfrey St.
Shell Ave.	Huntington St.
Shell Ave.	"I" St.
Shell Ave.	"L" St.
Shell Ave.	"N" St.
Shell Ave.	McDonald St. (westernmost intersection)
Shell Ave.	Sparks St.
Shell Ave.	Tarleton St.
Shell Ave.	Upland St.
Sherwood Dr.	Oriole Dr.
Shirley Ln.	"D" St.
Shirley Ln.	Oaklawn Dr.
Shirley Ln.	Cumberland Dr.
Silverton Dr.	Gunnison Dr.
Silverton Dr.	Durango Dr.
Sinclair Ave.	"C" St.
Sinclair Ave.	Cessna Dr.
Sinclair Ave.	Culver Dr.
Sinclair Ave.	"D" St.
Sinclair Ave.	Godfrey St.
Sinclair Ave.	Holdridge Rd.
Sinclair Ave.	Hughes St.
Sinclair Ave.	Huntington St.
Sinclair Ave.	Lanham St.
Sinclair Ave.	Lindora Way / Woodcrest Dr.
Sinclair Ave.	McDonald St.
Sinclair Ave.	"N" St.
Sinclair Ave.	Northrup Drive
Sinclair Ave.	Pecos St.
Sinclair Ave.	Sparks St.
Sinclair Ave.	Tarleton St.
Sinclair Ave.	Upland St.
Sinclair Ave.	Ward St.
Sinclair Ave.	Wydewood Dr.
Sioux Ct.	Kanawha

ON	AT
Sister Creek	Fall Creek
Sister Creek	Woodrose
Six Flags	Big Bend Country
Skyline Dr.	Haynes Ave.
Skyline Dr.	Northfield Dr.
Skywood Cr. (west intersection)	Meadowpark Dr.
Smith Rd. (both intersections)	Desta Dr.
Solomon Ln.	"A" St.
Solomon Ln.	Lamesa Rd.
Solana	Santa Clarita
South St.	Carver St.
South St.	Lamesa Rd.
Southampton Ln.	Newcastle Dr.
Sparhawk Dr.	Quail Ridge Rd.
Sparks St.	Country Club Dr.
Sparks St.	Humble Ave.
Sparks St.	Princeton Ave.
Spartan Dr.	Fannin Ave.
Spartan Dr.	Neely Ave.
Spence Dr.	Canadian Ave.
Spence Dr.	Hilltop Dr.
Spence Dr.	Rio Grande Ave.
Spraberry Dr.	Anetta Dr.
Spraberry Dr.	Canyon/Devonian Dr.
Spraberry Dr.	Pleasant Dr.
Spraberry Dr.	Raymond Rd.
Spahn St.	Mile High Ln.
Spring Meadow Ln.	Meadowpark Dr.
Spring Meadow Ln.	Pine Meadow Dr.
Spring Park Dr.	Edwards St.
Springfield Ct.	Greenbriar Dr.
Springmont Dr.	Whittle Way
Springwood Ct.	Pine Meadow Dr.
Spruce Ave.	Loma Dr.
Spruce Ave.	Main St.
Spruce Ave.	Neely Ave.
Spruce Ave.	Pecos St.
Spruce Ave.	Tyler St.
Spur Dr.	I-20 N. Frontage Rd.
Spur Dr.	Lone Star Ln.
Spur Dr.	Red River Ln.
Spyglass Cr.	Purple Sage Tr.
St. Andrews Dr.	Dentcrest Dr.
St. Andrews Dr. / Ct.	Godfrey St.
St. Andrews Dr.	Mark Ln.
St. Andrews Dr.	Norwood St.
Stacie Ave.	Holdridge Rd.
Stanolind Ave.	"D" St.
Stanolind Ave.	Godfrey St.
Stanolind Ave.	"H" St.

ON	AT
Stanolind Ave.	Huntington St.
Stanolind Ave.	"I" St.
Stanolind Ave.	"L" St.
Stanolind Ave.	Lanham St.
Stanolind Ave.	Mark Ln.
Stanolind Ave.	McDonald Dr.
Stanolind Ave.	Mogford St.
Stanolind Ave.	"N" St.
Stanolind Ave. (both "dead end" locations between "D" St. and "A" St.)	Stanolind Ave.
Stanolind Ave.	Tarleton St.
Stanolind Ave.	Wedgewood St.
Stanolind Ave.	Western Dr.
Stanolind Ave.	Whitney Dr.
Stanolind Ave.	Winfield Rd.
Starboard Dr.	Tradewinds Blvd.
Sterling Pl.	Crowley Blvd.
Sterling Ct.	Heritage Blvd.
Stetson Dr.	Honeysuckle Ln.
Stewart Ave.	Shandon Ave.
Stewart Ave.	Tarleton St.
Stillmeadow Dr.	Fargo Ave.
Stillmeadow Dr.	Westminster Dr.
Stokes Ave.	Baird St. (westbound)
Stokes Ave.	Terrell St. (eastbound)
Stonebridge Dr.	Cerrillos Ave.
Stonebridge Dr.	Mockingbird Ln.
Stonebridge Dr.	Solomon Ln.
Stonecrest	Hereford Blvd.
Stonecrest	Windrift
Stonefield Dr.	Stonebridge Dr.
Stonefield Dr.	Torrey Vista Dr.
Stoneleigh Rd.	Lancashire Rd.
Stonewall St.	Indiana Ave.
Stonewall St.	New York Ave.
Stoneybrook Dr.	Ric Dr.
Stoneybrook Dr.	Shadylane Dr.
Storey Ave.	Alpine St.
Storey Ave.	"B" St.
Storey Ave.	Bentwood Dr.
Storey Ave.	Bonham St.
Storey Ave.	"C" St.
Storey Ave.	"D" St.
Storey Ave.	Edgewood Dr.
Storey Ave.	"F" St.
Storey Ave.	"G" St.
Storey Ave.	Godfrey St.
Storey Ave.	"K" St.
Storey Ave.	Lanham St.

ON	AT
Storey Ave.	Maberry St.
Storey Ave.	Marienfeld St.
Storey Ave.	McDonald St.
Storey Ave.	Powell St.
Storey Ave.	Stoneybrook Dr.
Storey Ave.	Ward St.
Stratford Ct.	Kingston Dr.
Stratton Dr.	Lehigh Dr.
Stratton Dr.	St. Andrews Dr.
Stutz Dr.	Maxwell Dr.
Stutz Dr. / Ct.	Ward St.
Stutz Dr.	Whitney Dr.
Stutz Pl.	Lanham St.
Summit Ave.	Baird St. (westbound)
Summit Ave.	Belmont St.
Summit Ave.	Terrell St. (eastbound)
Sunburst Dr.	Preston Dr.
Sunburst Dr.	Sunshine Pkwy.
Suncrest Ave.	Dengar Ave.
Suncrest Ave.	McDonald St.
Sundance Pl.	Crowley Blvd.
Sundance Ct.	Heritage Blvd.
Sundown Cr.	Purple Sage Tr.
Sunmore Cr. (both intersections)	Sunburst Dr.
Sunnyside Dr.	Stonybrook Dr.
Sunnyside Dr.	Storey Ave.
Sunset Blvd.	Michigan Ave.
Sunset Blvd.	Ohio Ave.
Sunshine Pkwy.	Idlewilde Dr.
Sunshine Pkwy.	Wydewood Dr.
Sun Tea Way	Daybreak Way
Sun Tea Way	Harvest Rain St.
Sweetbriar Dr.	Ric Dr.
Sweetbriar Dr.	Storey Ave.
Sycamore Ave.	Crestview Rd.
Sycamore Ave.	Holly Dr.
Tamarind Dr.	Melville Dr.
Tammy Cv.	Fredna Pl.
Tanforan Ave.	Oriole Dr.
Tanforan Ave.	Widener Strip
Tanglewood Dr.	Leisure Dr.
Tanner Dr.	Devonian Dr.
Tanner Dr.	Leddy Dr.
Tanner Dr.	McDonald St.
Tanner Dr.	Mercedes Dr.
Tanner Dr.	Raymond Rd.
Taos Rd.	Overshine Dr.
Tarleton St.	Cuthbert Ave.
Tarleton St.	Neely Ave.
Tarleton St.	Shandon Ave.

ON	AT
Tarleton St.	Storey Ave.
Taylor Ave.	Camp St.
Taylor Ave.	Jefferson St.
Taylor Ave.	Main St.
Taylor Ave.	Marshall St.
Taylor Ave.	Mineola St.
Taylor Ave.	Terrell St.
Teakwood Tr.	Oriole Dr.
Tejas	Shawnee
Telluride Dr./Ct.	Durango Dr.
Tennessee Ave.	Baird St.
Tennessee Ave.	"C" St.
Tennessee Ave.	Carrizo St.
Tennessee Ave.	Colorado St.
Tennessee Ave.	"D" St.
Tennessee Ave.	Dallas St.
Tennessee Ave.	E. Broadway St.
Tennessee Ave.	"F" St.
Tennessee Ave.	Fort Worth St.
Tennessee Ave.	"G" St.
Tennessee Ave.	Loraine St.
Tennessee Ave.	"L" St.
Tennessee Ave.	"M" St.
Tennessee Ave.	Main St.
Tennessee Ave.	Marienfeld St.
Tennessee Ave.	"N" St.
Tennessee Ave.	Terrell St.
Tennessee Ave.	W. Broadway
Tennessee Ave.	Weatherford St.
Terra Ct.	Brighton Pl.
Terrace Ave.	Lanham St.
Terrace Ave.	Maberry St.
Terrace Ave.	Mogford St.
Terrace Ave.	Neely Ave.
Terrace Ave.	Ward St.
Terrell St.	Cuthbert Ave.
Terrell St.	Gist Ave.
Terrell St.	Golf Course Rd.
Terrell St.	Hicks Ave.
Terrell St.	Illinois Ave.
Terrell St.	Louisiana Ave.
Terrell St.	Parker Ave.
Terrell St.	Taylor Ave.
Texas Ave.	Calhoun St.
Texas Ave.	Carver St.
Texas Ave.	Donald St.
Texas Ave.	Jackson St.
Texas Ave.	Lee St.
Texas Ave.	Tilden St.
Thames Ct.	Lancashire Rd.

ON	AT
Thomas Ave.	Crestview Rd.
Thomas St.	Ohio Ave.
Thomas Ave.	Raymond Rd.
Thomason Dr.	Beal Pkwy. / Illinios Ave.
Thomason Dr.	Tradewinds Blvd.
Thornridge Dr.	Leisure Dr.
Thornridge Dr.	Shadylane Dr.
Three Rivers Ln.	Riverfront Dr.
Three Rivers Ln.	Spahn St.
Tilden St.	Golf Course Rd.
Tilden St.	Illinois Ave.
Tilden St.	Indiana Ave.
Tilden St.	Orchard Ln.
Tilden St.	Wall St.
Timber Ln. / Ct.	Oakridge Dr.
Timberglen Pl./Cir.	Valwood Dr.
Timberwolf	Elkins
Torrey Vista Dr.	Solomon Ln.
Tradewinds Blvd.	Deauville Blvd.
Travis Ave.	Crestview Rd.
Travis Ave.	Holly Dr.
Travis Ave.	Powell St.
Travis Ave. (both intersections)	Walker St.
Travis Ave.	Waverly Dr.
Travis Ave.	Williams St.
Tremont Ave.	Dentcrest Dr.
Tremont Ave.	Edgemont Dr.
Tremont Ave.	Mark Ln.
Tremont Ave.	Sagemont Dr.
Tremont Ave.	Whittle Way
Trennon Pl.	Crowley Blvd.
Trenton Dr.	Trobaugh Blvd.
Trenwood Dr.	Desert Rose Dr.
Trenwood Dr.	Solomon Ln.
Trevino St.	Crenshaw Dr.
Trevino St.	Graham Dr.
Trevino St.	Nicklaus St.
Trinity Ct.	Greenbriar Dr.
Trinity Dr.	Godfrey St.
Trinity Dr.	Milbrook Pl.
Trinity Dr.	Wedgewood St.
Trinity Meadows Dr.	Fieldcrest Ln. / Meadowridge Ln.
Trinity Meadows Dr.	Skyline Dr.
Trinity Meadows Pl.	Northfield Dr.
Trinity Meadows Pl.	Skyline Dr.
Truman St.	Delano Ave.
Truman St.	Franklin Ave.
Truman St.	Kessler Ave.
Truman St.	Mariana Ave.
Turtle Creek Rd.	Pedernales Dr.

ON	AT
Twin Springs	Barking Rock
Tyler St.	California Ave. (east and west intersections)
Tyler St.	Chestnut Ave.
Tyler St.	Cottonwood Ave.
Tyler St.	Cowden Ave.
Tyler St.	Cuthbert Ave.
Tyler St.	Dormard Ave.
Tyler St.	Estes Ave.
Tyler St.	Garden Ln.
Tyler St.	Golf Course Rd.
Tyler St.	Hamby Ave.
Tyler St.	Illinois Ave.
Tyler St.	Indiana Ave.
Tyler St.	Industrial Ave.
Tyler St.	Jax Ave.
Tyler St.	Jefferson St.
Tyler St.	Magnolia Ave.
Tyler St.	Missouri Ave.
Tyler St.	New York Ave.
Tyler St.	Nobles Ave.
Tyler St.	Oak Ave.
Tyler St.	Orchard Ln.
Tyler St.	Parker Ave.
Tyler St.	Pine Ave.
Tyler St.	South Ln.
Tyler St.	Texas Ave.
Tyler St.	Wall St.
Tyler St.	Walnut Ln.
Tyler St.	Washington Ave.
U.S. 80 Service Rd.	County Rd. 1162
U.S. 80 Service Rd.	Elkins Rd.
U.S. 80 Service Rd.	Todd Rd.
Upland St.	Baumann Ave.
Upland St.	Bedford Ave.
Upland St.	Cuthbert Ave.
Upland St.	Kansas Ave.
Upland St.	Louisiana Ave.
Upland St.	Michigan Ave.
Upland St.	Ohio Ave.
Upland St.	Princeton Ave.
Upland St.	Storey Ave.
Valley Dr.	Haynes Ave.
Valley Dr.	Skyline Dr.
Valley View St.	Daybreak Way
Valor Ct.	Valor Ln.
Valor Ln.	Arlington Rd.
Valor Ln.	Pentagon Rd.
Val Verde Dr.	Sandstone Dr.
Valwood Dr.	Tanforan Ave.

ON	AT
Vanguard Rd.	Arlington Rd.
Vanguard Rd.	Bunker Hill Rd.
Vanguard Rd.	Founders Rd.
Vanguard Rd.	Victory Pkwy.
Ventnor Ave.	Boardwalk
Ventnor Ave.	Carver St.
Ventura Ave.	"I" St.
Ventura Ave.	"L" St.
Verde Glen Ct.	Bent Tree Tr. (both intersections)
Vermont Ave.	Pacific Ave.
Versailles Dr.	Burchill Dr.
Versailles Dr.	Devonian Dr.
Versailles Dr.	Eisenhower Dr.
Versailles Dr.	Meadow Dr.
Victory Pkwy.	Arlington Rd.
Vine Pl.	Franklin Ave.
Virginia Ave.	Pacific Ave.
Vista West Pkwy.	Bluebird Ln.
Vista West Pkwy.	Caldera Blvd.
Vista West Pkwy.	Purple Sage Trl.
W. Broadway St.	Cuthbert Ave.
W. Broadway St.	Harvard Ave.
W. Broadway St.	Louisiana Ave.
W. Broadway St.	Michigan Ave.
W. Broadway St.	Storey Ave.
W. Circle Dr.	Delano Ave.
W. Circle Dr.	Franklin Ave.
W. Circle Dr.	Roosevelt Ave.
W. Industrial Loop	Industrial Ave.
Wagner Dr./St.	Legends Blvd.
Wagner Dr.	Three Rivers Ln.
Walcott Ave.	Loraine St.
Walcott Ave.	Main St.
Walcott Ave.	Whitaker St.
Wall St.	Carver St.
Wall St.	Lee St.
Wall St.	Loraine St.
Wall St.	Tilden St.
Walnut Ln.	Carver St.
Walnut Ln.	Fairgrounds Rd.
Walnut Ln.	Lincoln St.
Walnut Ln.	Terrell St.
Walton Ave.	Pecos St.
Ward St.	Auburn Dr.
Ward St.	Cuthbert Ave.
Ward St.	Fannin Ave.
Ward St.	Haynes Ave.
Ward St.	Haynes Dr.
Ward St.	Louisiana Ave.
Ward St.	Michigan Ave.

ON	AT
Ward St.	Neely Ave.
Ward St.	Ohio Ave.
Ward St.	Princeton Ave.
Ward St.	Sentinel Dr.
Warehouse Rd.	Industrial Ave.
Washington Ave.	"B" St.
Washington Ave.	Benton St.
Washington Ave.	"C" St.
Washington Ave.	Carver St.
Washington Ave.	Clay St.
Washington Ave.	"D" St.
Washington Ave.	"F" St.
Washington Ave.	"G" St.
Washington Ave.	"L" St.
Washington Ave.	Lee St.
Washington Ave.	Madison St.
Washington Ave.	Main St.
Washington Ave.	Mann St.
Washington Ave.	McGarvey St.
Washington Ave.	"N" St.
Washington Ave.	Pecos St.
Washington Ave.	Stonewall St.
Washington Ave.	Tilden St.
Washington Ave.	Webster St.
Washita	Choctaw
Washita	Fairgrounds Rd.
Washita	Kanawha
Washita	Shawnee
Watson Ct.	Crenshaw Dr.
Watson St.	Cuthbert Ave.
Watson St.	Pecos St.
Waukomis Pl.	Navajo
Waurika Pl.	Navajo
Waverly Dr.	Anetta Dr.
Waverly Dr.	Raymond Rd.
Wayside Dr.	Taylor Ave.
Weatherford St.	Cuthbert Ave.
Weatherford St.	Golf Course Rd.
Weatherford St.	Hamby Ave.
Weatherford St.	Hicks Ave.
Weatherford St.	Indiana Ave.
Weatherford St.	Jax Ave.
Weatherford St.	Kansas Ave.
Weatherford St.	Kentucky Ave.
Weatherford St.	Louisiana Ave.
Weatherford St.	Michigan Ave.
Weatherford St.	Mississippi Ave.
Weatherford St.	New Jersey Ave.
Weatherford St.	New York Ave.
Weatherford St.	Parker Ave.

ON	AT
Weatherford St.	Pennsylvania Ave.
Weatherford St.	Taylor Ave.
Weatherford St.	Washington Ave.
Webster St.	Indiana Ave.
Webster St.	New York Ave.
Webster St.	Pennsylvania Ave.
Wedgewood Ct.	Godfrey St.
Wedgewood St.	Godfrey St.
Wedgewood St.	Gulf Ave.
Wedgewood St.	Humble Ave.
Wedgewood St.	Hyde Park Ave.
Wedgewood St.	Neely Ave.
Wedgewood St.	Shell Ave.
West Wind Ct.	Bent Tree Tr.
Westcliff Dr.	Douglas Ave.
Westcliff Dr.	Princeton Ave.
Western Dr.	Golf Course Rd.
Western Dr.	Neely Ave.
Western Dr.	Stanolind Ave.
Westminister Dr.	Fargo Ave.
Westminster Dr.	Norwood St.
Westview Dr.	Bluebird Ln. (northbound)
Westview Dr.	Southridge Ct.
Westwind Dr.	Nassau Dr.
Westwind Dr.	Shell Ave.
Wewoka Pl.	Navajo
Whitaker St.	Cuthbert Ave.
Whitaker St.	Kansas Ave.
White Horse Cv.	Berkeley Trail
Whitman Dr.	Bluebird Ln.
Whitney Dr.	Haynes Dr.
Whitney Dr.	Maxwell Dr.
Whitney Dr.	Moss Ave.
Whitney Dr.	Neely Ave.
Whitney Dr.	Sentinel Dr.
Whittle Way	Preston Dr.
Whittle Way	Sunshine Pkwy.
Whittle Way	Tremont Ave.
Wichita Ct.	Pedernales Dr.
Willeys Ave.	Calhoun St.
Willeys Ave.	Jackson St.
Willeys Ave.	Jesse St.
Willeys Ave.	Tilden St.
Willingham Dr.	Manor St.
Willingham Dr.	McDonald St.
Willowood Dr.	Leisure Dr.
Wilshire Dr.	Eisenhower Dr.
Wilshire Dr.	Graceland Dr.
Wilshire Dr.	Parkdale Dr.
Wimberley Spring Ct.	Spence Dr.

ON	AT
Windecker St.	La Force Blvd.
Windecker St.	Sloan Field Blvd.
Windecker St.	Wright Dr.
Windhaven Dr.	Deauville Blvd.
Windhaven Dr.	Tradewinds Blvd.
Windridge Cir.	Mockingbird Ln. (both intesections)
Windrift	Crowley Blvd.
Winfield Rd.	Humble Ave.
Winfield Rd.	"I" St.
Winfield Rd.	"L" St.
Winfield Rd.	Seaboard Ave.
Wolcott Ave.	Baird St.
Wolcott Ave.	Terrell St. (eastbound)
Wolcott Ave.	Main St.
Wood Dr.	Oriole Dr.
Wood Dr.	Valwood Dr.
Woodbar Ct.	Northcrest Dr.
Woodcrest Dr.	Cuthbert Ave.
Woodcrest Dr.	Princeton Ave.
Woodcrest Dr.	Ric Dr.
Woodcrest Dr.	Sinclair Ave.
Woodcrest Dr.	Storey Ave.
Woodhaven Ct.	Skyline Dr.
Woodhaven Dr.	Skyline Dr.
Woodhollow Dr.	Briarpath Dr.
Woodhollow Dr.	Hilltop Dr. / Lemonwood Dr.
Woodhollow Dr.	Mathis St.
Woodhollow Dr.	Northcrest Dr.
Woodhollow Dr.	Oriole Dr.
Woodland Park Ave.	"A" St.
Woodland Park Ave.	Breckenridge Dr.
Woodland Park Ave.	Gunnison Dr.
Woodrose	Barking Rock
Wrangler Ln.	Lone Star Ln.
Wright Dr.	Sloan Field Blvd.
Wydewood Dr.	Dengar Dr.
Wydewood Dr.	Dentcrest Ave.
Wydewood Dr.	Everglade Ave.
Wydewood Dr.	Neely Ave.
Wydewood Dr.	Sinclair Ave.
Wylea Cv.	Lindora Way
Yellow Rose Ct.	Buffalo Gap
Yorkshire Dr.	Sherwood Dr.
Yorkshire Dr.	Widener Strp.

SECTION TWO. That the Traffic Engineer is hereby authorized and directed to erect and install appropriate signs and markings at the designated locations in conformance

with the State Highway Department's Manual and Specifications, indicating and carrying out the provisions of this ordinance.

SECTION THREE. The provisions of this ordinance are to be cumulative of all other ordinances or parts of ordinances governing or regulating the same subject matter as that covered herein; provided, however, that all prior ordinances or parts of ordinances inconsistent with or in conflict with any of the provisions of this ordinance are hereby expressly repealed to the extent of any such inconsistency or conflict.

SECTION FOUR. If any section, subsection, sentence, clause or phrase of this ordinance is, for any reason, held to be unconstitutional or invalid, such holding shall not affect the validity of the remaining portions of this ordinance. The Council of the City of Midland hereby declares that it would have passed this ordinance and each section, subsection, sentence, clause, or phrase hereof irrespective of the fact that any one or more sections, subsections, sentences, clauses, or phrases be declared unconstitutional or invalid.

SECTION FIVE. The penalty for violation of this ordinance shall be in accordance with the general penalty provisions contained in Section 1-3-1 of the City Code of Midland, Texas, which provides for a fine not exceeding two hundred dollars ($200.00).

SECTION SIX. The City Secretary is hereby authorized and directed to publish the descriptive caption of this ordinance in the manner and for the length of time prescribed by the law as an alternative method of publication.

The above and foregoing ordinance was duly proposed, read in full and adopted on first reading, the _____ day of _____, A.D., 2020; and passed to second reading on motion of Council member _____, seconded by Council member _____, by the following vote:

Council members voting "AYE":

Council members voting "NAY":

The above and foregoing ordinance was read in full and finally adopted by the following vote upon motion of Council member _____, seconded by Council member _____, on the _____ day of _____, A.D., 2020, at a regular meeting of the City Council:

Council members voting "AYE":

Council members voting "NAY":

PASSED AND APPROVED THIS _____ day of _____, A.D., 2020.

_____
Patrick N. Payton, Mayor

ATTEST:

_____
Amy M. Turner, City Secretary

APPROVED AS TO CONTENT
AND COMPLETENESS:

_____
Robert Patrick, Assistant City Manager

_____
Michael Pacelli, City Traffic Engineer

APPROVED ONLY AS TO FORM:

_____
John Ohnemiller, City Attorney

BOARDS AND COMMISSIONS OF THE CITY OF MIDLAND
April 28, 2020

AIRPORT PLANNING AND DEVELOPMENT BOARD

(Advisory)
(Membership-10; Terms - 3 Years expiring 3-3-4.)

	Appt Date	Term Expires	Eligibility Expires
John Trischitti III	*09/13	Sept 30 2020	Sept 30 2020
Bill Dingus	09/14	Sept 30 2020	Sept 30 2020
Wes Reeves	08/15*	Sept 30 2020	Sept 30 2023
Keith Valentine	04/15*	Sept 30 2020	Sept 30 2023
Armand “Chip” Smith	09/18	Sept 30 2021	Sept 30 2024
Nick Hood	09/15	Sept 30 2021	Sept 30 2021
Earl Erdman	02/16*	Sept 30 2022	Sept 30 2022
Scooter Brown	09/16	Sept 30 2022	Sept 30 2022
Justin Kuethe	09/19	Sept 30 2022	Sept 30 2025
Nick McClure	09/19	Sept 30 2022	Sept 30 2025

Justine Ruff (Liaison)

Ex-Officio members are Earl Erdman and Harry Spannaus, the City Manager and the City Attorney. The Secretary is the Director of Aviation.

ANIMAL SERVICES ADVISORY COMMISSION

(Advisory)
(Membership - 7; Terms - 4 Years)

	Appt Date	Term Expires	Eligibility Expires
Sara Harris	03/18*	Sept 30 2021	Sept 30 2029
Leah Lewis	09/17	Sept 30 2021	Sept 30 2025
Robert “Robin” Donnelly	11/13	Sept 30 2021	Sept 30 2021
Dr. (Erickson) Lee (Veterinarian)	05/14	Sept 30 2022	Sept 30 2022
LuAnn Morgan	07/15*	Sept 30 2022	Sept 30 2026
Alyson Dial	09/18	Sept 30 2022	Sept 30 2026
Dr. J. Annette Jensen (Veterinarian)	04/20	Sept 30 2024	Sept 30 2028

Leah Lewis (Liasion)

BUILDING AND FIRE CODE REVIEW COMMITTEE/CONSTRUCTION BOARD OF ADJUSTMENTS & APPEALS

(Membership – 9; Terms – 6 Years)

Shall consist of two architects, a fire protection contractor or specialist, a general contractor, an electrical contractor, a homebuilder, a plumbing and mechanical contractor, a structural engineer, a City Council Liaison

	Appt Date	Term Expires	Eligibility Expires
Ryan Almand (Electrical Contractor)	12/18	Sept 30 2024	Sept 30 2030
Jay Bradford (Architect)	12/18	Sept 30 2024	Sept 30 2030
Ron Ainsworth (Plumbing & Mechanical Contractor)	12/18	Sept 30 2024	Sept 30 2030
T.J. McClure (Architect)	12/18	Sept 30 2024	Sept 30 2030
Laurence Oeth (Structural Engineer)	12/18	Sept 30 2024	Sept 30 2030
David Hickman (Fire Protection)	12/18	Sept 30 2024	Sept 30 2030
Gary Glasscock (General Contractor)	12/18	Sept 30 2024	Sept 30 2030
Robert Anderson (Homebuilder)	12/18	Sept 30 2024	Sept 30 2030
Jeff Pinkstaff (Liaison)	12/18	Sept 30 2024	Sept 30 2030

CAPITAL IMPROVEMENT ADVISORY COMMITTEE

(Advisory)

(Membership – 7)

A minimum of 40% must be representative of real estate, development, or building industries who are not employees or officials of a political subdivision or governmental entity.)

	Appt Date
Carl Craigo	10/19
Walter Pate	06/18
Mark Payne	06/18
Courtney Black	06/18
Brian Sales	06/18
Chuck Harrington	06/18
Jose Ortiz	06/18

CITIZENS DEVELOPMENT AND HOTEL/MOTEL ADVISORY BOARD

(Advisory)

(Membership - 7; Terms - 2 Years Staggered)

4 2020, 3 -2021

	Appt Date	Term Expires	Eligibility Expires
Joey Hopkins	10/18	Sept 30 2020	Sept 30 2022
Ashlee Nelson	10/18	Sept 30 2020	Sept 30 2022
Alex Singh	10/18	Sept 30 2020	Sept 30 2022
Becky Wisdom	10/18	Sept 30 2020	Sept 30 2022
Ellen K. Ramsey	10/18	Sept 30 2021	Sept 30 2023
Kate Williamson	10/18	Sept 30 2021	Sept 30 2023
David Blackketter	10/18	Sept 30 2021	Sept 30 2023
Amy Turner (Liaison)			
Lori Blong (Council Liasion)			

*** Indicates appointment to an unexpired term.**

MANAGED COMPETITION COMMITTEE

(Ad Hoc)

	Appt. Date
Jon Morgan	01/02
Wes Perry	01/02
Roy Nelson	01/02
Hugh “Andy” Shaffer	12/03
Scott Dufford	01/02
Ted Tipton	04/04
Kevin Sparks	11/07
Scott Lovett	04/10
P. Lourcey Sams	04/10

Ex-Officio members are the Mayor and the City Manager.

MIDLAND CENTRAL APPRAISAL DISTRICT BOARD OF DIRECTORS

Five Directors, Elected by Local Taxing Entities.
City Nominates/Cast Vote for one Director
(Terms - 2 Years)

	Appt Date	Term Expires
Robert McNaughton	11/15	Dec 31 2021

MIDLAND DEVELOPMENT CORPORATION

(Membership - 7; Terms -3 Years - Staggered)

	Appt Date	Term Expires	Eligibility Expires
Chase Gardaphe	01/19	Jan 14 2022	Jan 14 2025
Wesley Bownds	07/15*	Jan 14 2022	Jan 14 2022
Barry Simpson	01/19	Jan 14 2022	Jan 14 2025
Stephen Lowery	01/17	Jan 14 2023	Jan 14 2023
Lori Blong	02/20	Jan 14 2023	Jan 14 2026
(Vacant)			
(Vacant)			

MIDLAND FRESH WATER SUPPLY DISTRICT #1

(Ad Hoc)
(3 Non Voting Members)

	Appt Date
Wes Perry	05/12
Gary Harris	05/12
Wayne Merritt	05/12

*** Indicates appointment to an unexpired term.**

MIDLAND HIGHER EDUCATION FACILITIES CORPORATION

(Membership - 7; Terms - 2 Years Staggered)

	Appt Date	Term Expires	Eligibility Expires
Steve Jones	**09/08***	**Jan 1 2010**	**Jan 1 2012**
Cathy Oestmann	**11/05***	**Jan 1 2010**	**Jan 1 2010**
Vacancy		**Jan 1 2007**	
Vacancy		**Jan 1 2007**	
Vacancy		**Jan 1 2007**	
Vacancy		**Jan 1 2009**	
Curt Kamradt	**11/05***	**Jan 1 2014**	**Jan 1 2014**

Sharla Hotchkiss (Liaison)

MIDLAND HOUSING AUTHORITY COMMISSION

(Membership - 5; Terms - 2 Years expiring 2 even & 3 odd.)

Appointments Made by Mayor (LGC 392.031)

	Appt Date	Term Expires
Dennis Bade	09/12	Oct 2020
Marjorie McQuerry	10/16	Oct 2020
Brandon Bradley	09/17	Oct 2021
Sylvestor Cantu	09/18*	Oct 2021
Cheryl Wadley (Resident Commissioner)	11/19	Oct 2021

Isaac Garnett (Staff Liasion)

MIDLAND MUNICIPAL MANAGEMENT DISTRICT BOARD

(Ad Hoc)

	Appt. Date
Vacancy	
W. L. “Scooter” Brown	09/04
Vacancy	
Richard Hatchett	11/08
Vacancy	
Ted H. Jones	09/04
Mitch Malouf	11/08
Christi Newton	09/04
Dan Rush	09/04

*** Indicates appointment to an unexpired term.**

MIDLAND-ODESSA URBAN TRANSIT DISTRICT BOARD

(Decision Making)
(Membership - 6; Terms - 2 Years Staggered)

	Appt Date	Term Expires	Eligibility Expires
Jody Sneed	05/15*	Sept 30 2019	Sept 30 2019
Sharla Hotchkiss	02/14*	Sept 30 2019	Sept 30 2019
VACANT (Westmoreland)	06/18*	Sept 30 2020	Sept 30 2022
E. J. Baldridge	10/18	Sept 30 2020	Sept 30 2022
Iris Foster	06/18*	Sept 30 2020	Sept 30 2022
Joseph Sanchez	12/19	Sept 30 2021	Sept 30 2023

MIDLAND SPACEPORT DEVELOPMENT CORPORATION

(Membership – 7, Terms – 2 Years)

	Appt Date	Term Expires
Gina Lewis (City)	10/19	Jun 1 2021
VACANT (Blong)(City)	01/20	Jun 1 2022
Zackary Deck (City)	02/20	Jun 1 2022
Frank Tarzian (City)	02/20	Jun 1 2022
Scott Ramsey (County)	11/17	Jun 1 2021
Robert Donnelly (County)	06/14	Jun 1 2021
VACANT (Echols)(County)	06/14	Jun 1 2021

Justine Ruff (Liaison)
Lori Blong (Council Liaison)

OIL AND GAS ADVISORY COMMITTEE

(Advisory)
(Membership – 5; Terms – 3 Years expiring 2-2-1)
2 real property developer, real estate sales, or developer; 3 Lic. petroleum engineer, engineer w/ bachelor, or geologist

	Appt Date	Term Expires	Eligibility Expires
Stephen Brumley (Petroleum Eng.)	11/15	Sept 30 2021	Sept 30 2021
Court Adkins (Petroleum Eng.)	09/17	Sept 30 2020	Sept 30 2023
Bill Lanier (Real Estate)	09/18	Sept 30 2021	Sept 30 2024
Scott Bowden (Real Estate)	10/19	Sept 30 2022	Sept 30 2025
Ross Klabon (Petroleum Eng.)	10/19	Sept 30 2022	Sept 30 2025

*** Indicates appointment to an unexpired term.**

PARKS AND RECREATION COMMISSION

(Advisory)
(Membership - 9; Terms - 3 Years expiring 3-3-3.)

	Appt Date	Term Expires	Eligibility Expires
Lisa Fitzgerald	09/17	Sept 30 2020	Sept 30 2023
Michael Harris	09/14	Sept 30 2020	Sept 30 2020
Shirley Howard	02/16*	Sept 30 2021	Sept 30 2024
Connie Ferguson	09/16	Sept 30 2022	Sept 30 2022
Stephanie Martin	10/16	Sept 30 2022	Sept 30 2022
Laura Smith	10/19	Sept 30 2022	Sept 30 2025
Francis Schammel	10/19	Sept 30 2022	Sept 30 2025
Susannah Prucka	04/20	Sept 30 2023	Sept 30 2026
Lynn Rogers	04/20	Sept 30 2023	Sept 30 2026
Tina Juaz (Liaison)			
John Norman (Council Liaison)			

PERMIAN BASIN COMMUNITY CENTER FOR MENTAL HEALTH AND MENTAL RETARDATION

(Decision Making)
(Membership - 2 (City); Terms - 2 Years)

	Appt Date	Term Expires
Mark Dettman (City)	07/18	June 2020
Larry Edgerton (City)	07/10*	June 2021

PERSONNEL BOARD OF APPEALS

(Decision Making)
(Membership - 3; No designated terms. Mayor appoints.)

	Appt. Date
Scott Dufford	01/14
John B. Love III	01/14
Hugh A. “Andy” Shaffer	09/05

*** Indicates appointment to an unexpired term.**

PLANNING AND ZONING COMMISSION

(Advisory & Decision Making)
(Membership - 7; Terms - 3 Years)

	Appt Date	Term Expires	Eligibility Expires
Warren Ivey	10/12*	Sept 30 2020	Sept 30 2020
Joshua Sparks	01/14*	Sept 30 2020	Sept 30 2020
Diane Williams	09/17	Sept 30 2020	Sept 30 2023
Reggie Lawrence	09/14*	Sept 30 2021	Sept 30 2021
Chase Gardaphe	01/14*	Sept 30 2022	Sept 30 2022
Kevin Wilton	09/16	Sept 30 2022	Sept 30 2022
Karmen Bryant	02/19*	Sept 30 2022	Sept 30 2025
ALTERNATES:			
Stacey Jo Grosse	07/18*	Sept 30 2021	Sept 30 2024
Lucy Sisniega	09/19	Sept 30 2022	Sept 30 2025

ZONING BOARD OF ADJUSTMENT AND AIRPORT ZONING BOARD OF ADJUSTMENT

(Decision Making)
(Membership - 5; Terms - 2 Years expiring 3 odd & 2 even.)

	Appt Date	Term Expires	Eligibility Expires
Matthew Wallace	07/15*	Sept 30 2020	Sept 30 2020
Joby Rittenhouse	02/19*	Sept 30 2020	Sept 30 2024
Derek Whiting	01/18*	Sept 30 2021	Sept 30 2023
Reed Claybrook	03/19*	Sept 30 2021	Sept 30 2023
E.J. Baldridge	02/18	Sept 30 2021	Sept 30 2023
ALTERNATES: (not applicable to Airport Zoning)			
James Robert Franklin		Sept 30 2021	
VACANCY		**Sept 30 2020**	

***** **Indicates appointment to an unexpired term.**

MIDLAND DEVELOPMENT CORPORATION
(Membership - 7: Terms - 3 Years - Staggered)

MEMBER	TERM EXPIRES	ATTENDANCE	MEETINGS ATTENDED	TOTAL MTGS	ELIGIBLE	NOTES
Chase Gardaphe	Jan 14 2022		5	12	Yes	Appointed 01/2019
Wesley Bownds	Jan 14 2022	83%	10	12	Yes	
Barry Simpson	Jan 14 2022	58%	7	12	Yes	
Stephen Lowery	Jan 14 2023	92%	11	12	Yes	
Lori Blong	Jan 14 2023					Appointed 02/2020
(VACANT)						
(VACANT)						
Applicants Name	Additional Boards Applying to	COUNCIL NOTES				
P Lourcey Sams	P & Z					
Jill C. Pennington						
Mercedes Buchanan						
Elaine Bedell						
Steven Villela						
Kathryn Chandler	P & R					
James Gerety						
Adam Lawlis						
Wes Gotcher	MHA, P&Z					
Douglas B. Schmidt						
Sharla Hotchkiss	CDHMAB, P&R, ASAC					

MIDLAND-ODESSA URBAN TRANSIT DISTRICT BOARD
(Advisory; Membership - 6: Terms - 2 Years Staggered)

MEMBER	TERM EXPIRES	ATTENDANCE	MEETINGS ATTENDED	TOTAL MTGS	ELIGIBLE	NOTES
Jody Sneed	Sept 30 2019	33%	4	12	No	
Sharla Hotchkiss	Sept 30 2019	75%	9	12	No	
VACANT (Westmoreland)	Sept 30 2019	42%	5	12	Yes	
E.J. Baldridge	Sept 30 2020	42%	5	12		
Iris Foster	Sept 30 2020	83%	10	12		
Joseph Sanchez	Sept 30 2021			12		
Applicants Name	Additional Boards Applying to	COUNCIL NOTES				

APPLICATION FOR CITY OF MIDLAND BOARDS/COMMISSIONS/COMMITTEES

As an applicant for a City board, commission, or committee, please be advised that all information on this application is subject to the Texas Open Records Act and will be available to the public.

PLEASE TYPE OR PRINT CLEARLY:

Date:_____

Name:_____

Phone:_____ **(Home)**

Address:_____

_____**(Business)**

_____

Email:_____

(City) (State) (Zip)

I am ____ I am not ____ a U.S. Citizen

Please tell us about yourself:

Are you a graduate of Midland 101? ____yes _____no

I have lived in Midland _____ years.

Occupation:_____

Professional and/or Community Activities:

_____

_____

_____

What is your personal vision for the City?

_____

_____

_____

Please specify any time constraints you may have.

_____

_____

_____

Please list below the Board(s) or Commission(s) on which you are interested in serving:

(You can find a complete and current list on the City's website at *www.midlandtexas.gov*)

(1) Name of Board/Commission:

_____

_____

_____

Please tell us why you are interested in serving on this board or commission.

_____

_____

_____

What contribution would you most like to make?

_____

_____

_____

Additional pertinent information or references:

_____

_____

_____

(2) Name of Board/Commission:

_____

_____

_____

What contribution would you most like to make?

_____

_____

_____

Additional pertinent information or references:

_____

_____

_____

Applications are maintained on file in the City Secretary's office for a period of one year. Should you need additional information, please call us at 432-685-7430.

Signature of Applicant

_____

Applications may be submitted online via email or print in order to send by mail or fax:

City of Midland

City Secretary's Office

PO Box 1152

Midland, TX 79702

FAX: (432) 685-7433

APPLICATION FOR CITY OF MIDLAND BOARDS/COMMISSIONS/COMMITTEES

As an applicant for a City board, commission, or committee, please be advised that all information on this application is subject to the Texas Open Records Act and will be available to the public.

PLEASE TYPE OR PRINT CLEARLY:

Date:_____

Name:_____

Phone:_____ **(Home)**

Address:_____

_____**(Business)**

Email:_____

_____

(City) **(State)** **(Zip)**

I am ____ I am not ____ a U.S. Citizen

Please tell us about yourself:

Are you a graduate of Midland 101? ____yes _____no

I have lived in Midland _____ years.

Occupation:_____

Professional and/or Community Activities:

_____

_____

_____

What is your personal vision for the City?

_____

_____

_____

Please specify any time constraints you may have.

_____

_____

_____

Please list below the Board(s) or Commission(s) on which you are interested in serving:

(You can find a complete and current list on the City's website at *www.midlandtexas.gov*)

(1) Name of Board/Commission:

_____

_____

_____

Please tell us why you are interested in serving on this board or commission.

_____

_____

_____

What contribution would you most like to make?

_____

_____

_____

Additional pertinent information or references:

_____

_____

_____

(2) Name of Board/Commission:

_____

_____

_____

What contribution would you most like to make?

_____

_____

_____

Additional pertinent information or references:

_____

_____

_____

Applications are maintained on file in the City Secretary's office for a period of one year. Should you need additional information, please call us at 432-685-7430.

Signature of Applicant

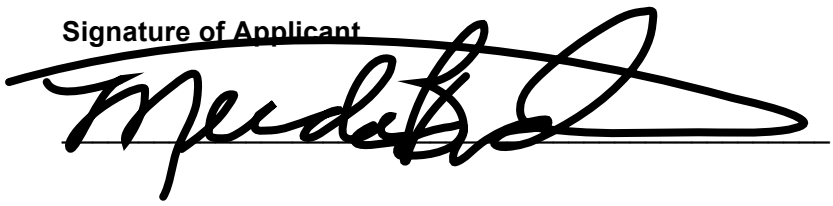

Applications may be submitted online via email or print in order to send by mail or fax:

City of Midland

City Secretary's Office

PO Box 1152

Midland, TX 79702

FAX: (432) 685-7433

MIDLAND
Feel the Energy!

APPLICATION FOR CITY OF MIDLAND BOARDS/COMMISSIONS/COMMITTEES

As an applicant for a City board, commission, or committee, please be advised that all information on this application is subject to the Texas Open Records Act and will be available to the public.

PLEASE TYPE OR PRINT CLEARLY:

Date: 1-07-2020

Name: ADRIAN CARRASCO

Phone: 432-553-7787 (Home)
432-695-6228 (Business)

Address: 2009 Mosswood Dr.

Email: adriancar@yahoo.com.

Midland TX 79707
(City) (State) (Zip)

I am [X] I am not [ ] a U.S. Citizen

Please tell us about yourself:

Are you a graduate of Midland 101? [ ] yes [X] no

I have lived in Midland 12 years.

Occupation: Owner - Premier Energy Services LLC

Professional and/or Community Activities:

Member - Communidad In Action, Member - St Ann's Catholic Church, Incoming Board Member Midland Hispanic Chamber of Commerce, Oil & Gas Business Owner for over 8 years. Bachelor of Arts Political Science - University of Texas San Antonio

What is your personal vision for the City?

Vision for Midland is for unity Amongst all fronts, Opportunity for new leaders on Boards & Commissions, Bring New Ideas & Collaborate with City Leadership, Build upon Midland's great Reputation of An Awesome City to Live In.

Please specify any time constraints you may have.

None at all.

Please list below the Board(s) or Commission(s) on which you are interested in serving:

(You can find a complete and current list on the City's website at www.midlandtexas.gov)

(1) Name of Board/Commission:

Planning & Zoning

Please tell us why you are interested in serving on this board or commission.

I feel I can bring an open mind & positive attitude to this Board. I have alot of Experience with Construction plans, Re-Locating Well pads & Lines for Residential & Commercial growth, I have positive Negotiating skills, I bring an open mind to everything I do & work well with others for the common good!

What contribution would you most like to make?

POSITIVE ATTITUDE AND SKILLS to BRING PEOPLE together to MAKE SOUND DECISIONS. GREAT COMMUNICATION SKILLS. ABLE to THINK THINGS THRU WITHOUT OUTSIDE INFLUENCES. NO POLITICAL TIES or AGENDA IN MAKING DECISIONS.

Additional pertinent information or references:

ABRAHAM GUTIERREZ - 432-352-2747

LUIS SANCHEZ - MIDLAND COUNTY COMMISSIONER - 432-352-8130

JERRY MORALES - EX MAYOR MIDLAND, TX - 432-889-1706

(2) Name of Board/Commission:

PARKS & RECREATION

What contribution would you most like to make?

I WORK WELL WITH OTHERS & HAVE THE INTEREST OF MIDLAND at HEART. MY VISION IS REALISTIC ON WHAT WE CAN & DO FOR THE PARKS. I CAN CREATE & BUILD COMMUNITY PARTNERSHIPS WITH CORPORATIONS IN MIDLAND to HELP BUILD A MEANINGFUL MONETARY CAMPAIGN to HELP PAY FOR PROJECTS.

Additional pertinent information or references:

VICKIE HAZLEY - EX CITY COUNCIL - 432-235-2044

DR. GREG WILLIAMS - PRESIDENT ODESSA COLLEGE - 432-202-7191

CHARLENE MCBRIDE - DIRECTOR HISPANIC CULTURAL CENTER - 432-638-9486

Applications are maintained on file in the City Secretary's office for a period of one year. Should you need additional information, please call us at 432-685-7430.

Signature of Applicant

Applications may be submitted online via email or print in order to send by mail or fax:

City of Midland

City Secretary's Office

PO Box 1152

Midland, TX 79702

FAX: (432) 685-7433

Submit Via Email

Print Application

APPLICATION FOR CITY OF MIDLAND BOARDS/COMMISSIONS/COMMITTEES

As an applicant for a City board, commission, or committee, please be advised that all information on this application is subject to the Texas Open Records Act and will be available to the public.

PLEASE TYPE OR PRINT CLEARLY:

Date: 2/3/2020

Name: KATHRYN CHANDLER

Phone: 432-307-8388 **(Home)**

Address: 2004 W. INDIANA AVE. 432-221-0603 **(Business)**

MIDLAND TX 79701

Email: KATCHANDLER81@GMAIL.COM

(City) (State) (Zip)

I am [✓] **I am not** [ ] **a U.S. Citizen**

Please tell us about yourself:

Are you a graduate of Midland 101? [ ] **yes** [✓] **no**

I have lived in Midland 30 **years.**

Occupation: ATTORNEY / LAND SPECIALIST

Professional and/or Community Activities:

I have served on the Board of Directors for Girl Scouts of the Desert Southwest for the past four years and continue serving currently as the Board Secretary. I also volunteer regularly with Legal Aid of NorthWest Texas and the Aphasia Center of West Texas. In past years, I served as the President of the Permian Basin Outing Club and of the Midland County Young Lawyers.

What is your personal vision for the City?

I would like to see Midland move into the future by investing in expansion and continued maintenance of infrastructure, which will encourage private development and investment from within and outside of this community. I grew up in Midland and have lived here the majority of my professional life, and I would like to see the city as a place to live rather than a way-stop for young professionals.

Please specify any time constraints you may have.

I work full-time, but my employer (Concho Resources) is supportive of community involvement and allows employees flexibility.

Please list below the Board(s) or Commission(s) on which you are interested in serving:

(You can find a complete and current list on the City's website at *www.midlandtexas.gov*)

(1) Name of Board/Commission:

MIDLAND DEVELOPMENT CORPORATION

Please tell us why you are interested in serving on this board or commission.

I want to be involved in the community in ways that make Midland a better place to live. Encouraging investment and economic development seem to be the best ways for the community to move forward, and the MDC is the vehicle for that encouragement.

What contribution would you most like to make?

The Midland Development Corporation has a vital role in our community's development and yet has a very mixed reputation among citizens. I would most like to assist with improving the community understanding of the important role of an economic development corporation in overseeing the sales tax dollars dedicated to economic development.

Additional pertinent information or references:

(2) Name of Board/Commission:

PARKS & RECREATION COMMISSION

What contribution would you most like to make?

I would like to be a participant in the process of upgrading and maintaining the community's parks. I can see Dennis the Menace from my front porch, and it is an incredible facility that is utilized by the entire community. More parks on or near the level of Dennis the Menace would greatly improve Midland's quality of life factor for families.

Additional pertinent information or references:

Applications are maintained on file in the City Secretary's office for a period of one year. Should you need additional information, please call us at 432-685-7430.

Signature of Applicant

Kathryn Chevedden

Applications may be submitted online via email or print in order to send by mail or fax:

City of Midland

City Secretary's Office

PO Box 1152

Midland, TX 79702

FAX: (432) 685-7433

Submit Via Email

Print Application

Kathryn Chandler

2004 W. Indiana Ave.
Midland, Texas 79701

Cell: (432) 307-8388
Email: katchandler81@gmail.com

Professional Work Experience

November 2017-Present COG Operating, LLC Midland, Texas

Land Specialist (Sept 2018-Present) and Lease Analyst (Nov 2017-Sept 2018)

- Reviewing legal documents to ensure clearance of title requirements.
- Communicating with royalty owners, landmen, and title attorneys regarding clearing title requirements.
- Special projects in land department.
- Reviewed and entered oil and gas leases, amendments, extensions, mineral deeds, agreements, and rights of way into P2 Land system.
- Maintained lease and related records, including updates as wells are drilled and plugged.

2016-2017 Perdue, Brandon, Fielder, Collins & Mott, LLP Midland, Texas

Associate Attorney

- Represented government entities in west and south Texas in collection of delinquent receivables, with focus upon ad valorem property taxes.
- Tried delinquent tax suits to judgment, conducted tax foreclosure sales, and responded to client questions about the Texas Property Tax Code.
- Entertained clients, including local governmental and school board officials, and regularly attended governmental conferences and educational seminars with clients.

2013-2016 Foster & Harvey, P.C. Midland, Texas

Associate Title Attorney

- Examined chain of title documents to identify any ownership issues which could affect client oil and gas operations.
- Drafted drilling, acquisition, and division order title opinions tailored to the needs of the individual client's oil and gas operations.

2007-2013 City of Midland Midland, Texas

Assistant City Attorney

- Prosecuted class C misdemeanors at municipal court.
- Tried criminal cases to judgment at bench and jury trials and participated in hearings on motions for discovery, motions for new trial, and motions for revocation of deferred disposition.
- Completed responses to Open Records Requests and attended City Council meetings, as needed.

2006-2007 Legal Aid of Northwest Texas Odessa, Texas

Staff Attorney

- Represented low-income clients in family law, estate planning, and landlord/tenant cases at no cost to client.

2005 Daniel & Stark, P.C. College Station, Texas

Associate Attorney

- Drafted demand letters in personal injury cases and negotiated settlements with insurance companies.

Licenses to Practice Law

- State of Texas (2006)
- State of New Mexico (2016)
- State of Colorado (2016)
- State of Florida – currently inactive status (2016)

Education

2002-2005 Texas Tech School of Law Lubbock, Texas
- J.D.

1999-2002 Texas Lutheran University Seguin, Texas
- B.A., Political Science (Summa Cum Laude).

1999 Trinity School Midland, Texas
- High school diploma (Valedictorian).

Special Projects and Awards

- Vending Coordinator for the Tall City Blues Festival (2016-2018)
- Legal Aid of NorthWest Texas pro bono awards (2008, 2009, 2010, 2011, and 2012)
- Chairperson for Camp Mitre Peak Alumni Reunion for the Girl Scouts of the Desert Southwest (2006-2007, 2011-2012)
- Adult mentor at Camp CEO program (2007, 2008, 2009, 2011, 2012)
- Texas Tech University School of Law President's Scholarship (2002-2004)
- Section Tutor for first-year Constitutional Law and Torts classes at Texas Tech University School of Law (2003, 2005)
- Intern with Judge Fred Biery, U.S. District Court, Western District of Texas in San Antonio, Texas (Spring 2001)
- Intern with Organization of American States, Unit for Sustainable Development and the Environment, Natural Hazards Project in Washington, DC (Fall 2001)
- Texas Lutheran University Pacesetter Award for College Excellence (1999-2002)
- Girl Scouts of the United States of America Gold Award (1999)

Memberships

- **Board of Directors for Girl Scouts of the Desert Southwest – Southern New Mexico & West Texas** – Board Secretary (2017-2021); At-Large Director (2016-present)
- **Pro Bono Advisory Board for Legal Aid of NorthWest Texas** – Member (2008-present)
- **Midland County Young Lawyers** – Immediate Past President (2012-2013), President (2011-2012), Social Chair (2010-2011), Member (2008-2016)
- **Permian Basin Outing Club** - President (2014-2016)

Professional References

Available upon request.

MIDLAND
Feel the Energy!

APPLICATION FOR CITY OF MIDLAND BOARDS/COMMISSIONS/COMMITTEES

As an applicant for a City board, commission, or committee, please be advised that all information on this application is subject to the Texas Open Records Act and will be available to the public.

PLEASE TYPE OR PRINT CLEARLY:

Date: 02/18/2020

Name: Kimberly Crisp

Phone: 432-238-4045 **(Home)**

Address: 3304 Douglas Ave

— **(Business)**

Midland TX 79703

Email: KDCrisp8@gmail.com

(City) (State) (Zip)

I am ☑ **I am not** ☐ **a U.S. Citizen**

Please tell us about yourself:

Are you a graduate of Midland 101? ☐ **yes** ☑ **no**

I have lived in Midland 32 **years.**

Occupation: Licensed Professional Counselor

Professional and/or Community Activities:

As a counselor, I believe I have good communication skills. I have a following in our community as an advocate and am active in our local government.

What is your personal vision for the City?

I want to help foster improved community involvement through transparency. I believe that the residents want to be more plugged in, but do not know where to start.

Please specify any time constraints you may have.

With adequate notice, I can be available at any time.

Please list below the Board(s) or Commission(s) on which you are interested in serving:

(You can find a complete and current list on the City's website at www.midlandtexas.gov)

(1) Name of Board/Commission:

Midland Spaceport Development Corporation

Please tell us why you are interested in serving on this board or commission.

I am familiar with AST and science and other aspects of the spaceport and would like to be more active in this developing industry.

What contribution would you most like to make?

I would like to be a bridge between the Midland Spaceport Development Corporation and the public to bring increased transparency and accountability.

Additional pertinent information or references:

(2) Name of Board/Commission:

What contribution would you most like to make?

Additional pertinent information or references:

Applications are maintained on file in the City Secretary's office for a period of one year. Should you need additional information, please call us at 432-685-7430.

Signature of Applicant

K Gipp

Applications may be submitted online via email or print in order to send by mail or fax:

City of Midland

City Secretary's Office

PO Box 1152

Midland, TX 79702

FAX: (432) 685-7433

Submit Via Email

Print Application

APPLICATION FOR CITY OF MIDLAND BOARDS/COMMISSIONS/COMMITTEES

As an applicant for a City board, commission, or committee, please be advised that all information on this application is subject to the Texas Open Records Act and will be available to the public.

PLEASE TYPE OR PRINT CLEARLY:

Date: 02/11/2020

Name: Heather Ferrell

Phone: 580-695-8723 (Home)

Address: 801 Shell Ave

432-234-5866 (Business)

Midland TX 79705

Email: hdferrell21@gmail.com

(City) (State) (Zip)

I am ✔ **I am not** ____ **a U.S. Citizen**

Please tell us about yourself:

Are you a graduate of Midland 101? ____ **yes** ✔ **no**

I have lived in Midland 8 **years.**

Occupation: EHS Specialist

Professional and/or Community Activities:

American Society of Safety Professionals - Permian Basin Member

Callon Cares Committee - We provide volunteer work and/or monetary donations to community organizations in the Permian Basin

What is your personal vision for the City?

I believe that Midland has the potential to be an elite city in the state of Texas with the monetary resources we have here in the community. Having lived in five states and several communities ranging in population from 400 - 643,000, this gives me a unique perspective on what worked in these communities for parks and activities.

Please specify any time constraints you may have.

I work Monday - Thursday 7:00 AM - 5:00 PM and Friday 7:00 AM - 11:00 AM. I would be able to attend the commission meetings as my director is flexible when it comes to community work.

Please list below the Board(s) or Commission(s) on which you are interested in serving:

(You can find a complete and current list on the City's website at www.midlandtexas.gov)

(1) Name of Board/Commission:

Parks and Recreation Commission

Please tell us why you are interested in serving on this board or commission.

I would like to enhance the quality of life for all Midlandnites through advancing environmental conservation efforts, social equality, and health and wellness.

What contribution would you most like to make?
I want to create parks and recreations facilities that provide social and equity benefits to Midlandites. I want create friendly parks for all ages, genders, socioeconomic status, ethnicity, or ability to help foster community pride. I would like to see "pocket parks" that are accessible, comfortable and social places. There are a couple of these in my hometown that bring a wonderful aesthetic appeal to the downtown area.

Additional pertinent information or references:
Beverly Rogers 956-645-2188. Beverly and I have worked together on the Callon Cares Committee for the last year and a half.

Gary George 432-238-1384. Gary was my direct VP at Warren Equipment Company for 4 years.

(2) Name of Board/Commission:
N/A

What contribution would you most like to make?
N/A

Additional pertinent information or references:
N/A

Applications are maintained on file in the City Secretary's office for a period of one year. Should you need additional information, please call us at 432-685-7430.

Signature of Applicant

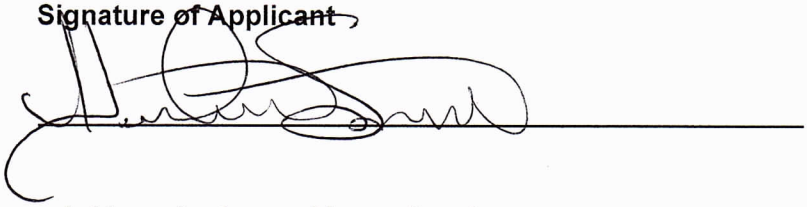

Applications may be submitted online via email or print in order to send by mail or fax:

City of Midland

City Secretary's Office

PO Box 1152

Midland, TX 79702

FAX: (432) 685-7433

Submit Via Email

Print Application

MIDLAND
Feel the Energy!

APPLICATION FOR CITY OF MIDLAND BOARDS/COMMISSIONS/COMMITTEES

As an applicant for a City board, commission, or committee, please be advised that all information on this application is subject to the Texas Open Records Act and will be available to the public.

PLEASE TYPE OR PRINT CLEARLY:

Date: 1-29-20

Name: Tracye Gearhart

Phone: (432) 934-6555 (Home)

Address: 6706 Mosswood _____ (Business)

Midland Texas 79707

(City) (State) (Zip)

Email: tcgearhart@gmail.com

I am [X] I am not [ ] a U.S. Citizen

Please tell us about yourself:

Are you a graduate of Midland 101? [ ] yes [X] no

I have lived in Midland 23 years.

Occupation: Local Business Owner

Professional and/or Community Activities:

President MASA Rescue Animal Rescue, Board Grassland West HOA
Past - Board of SafePlace, Board Lee Youth Center,
PTA President & Boardmember

What is your personal vision for the City?

To see Midland progress to what is today's relative standards of other well known cities.

Please specify any time constraints you may have.

None

Please list below the Board(s) or Commission(s) on which you are interested in serving:

(You can find a complete and current list on the City's website at www.midlandtexas.gov)

(1) Name of Board/Commission:

Animal Services Advisory Committee

Please tell us why you are interested in serving on this board or commission.

To learn existing state and city regulations. Contribute ideas to further the care of animals not just in the shelter but to the community as well.

What contribution would you most like to make?

To gain the knowledge on the shelter in order to educate the public and bring awareness to the public of the influx of animals into the shelter.

Additional pertinent information or references:

It's important to know the policies and procedures of the shelter. To be part of the solution, one must educate themselves on the process.

(2) Name of Board/Commission:

What contribution would you most like to make?

Additional pertinent information or references:

Applications are maintained on file in the City Secretary's office for a period of one year. Should you need additional information, please call us at 432-685-7430.

Signature of Applicant

Tracy Grant

Applications may be submitted online via email or print in order to send by mail or fax:

City of Midland

City Secretary's Office

PO Box 1152

Midland, TX 79702

FAX: (432) 685-7433

Submit Via Email

Print Application

APPLICATION FOR CITY OF MIDLAND BOARDS/COMMISSIONS/COMMITTEES

As an applicant for a City board, commission, or committee, please be advised that all information on this application is subject to the Texas Open Records Act and will be available to the public.

PLEASE TYPE OR PRINT CLEARLY:

Date:_____

Name:_____

Phone:_____ **(Home)**

Address:_____

_____**(Business)**

Email:_____

_____

(City) **(State)** **(Zip)**

I am ____ I am not ____ a U.S. Citizen

Please tell us about yourself:

Are you a graduate of Midland 101? ____yes _____no

I have lived in Midland _____ years.

Occupation:_____

Professional and/or Community Activities:

_____

_____

_____

What is your personal vision for the City?

_____

_____

_____

Please specify any time constraints you may have.

_____

_____

_____

Please list below the Board(s) or Commission(s) on which you are interested in serving:

(You can find a complete and current list on the City's website at *www.midlandtexas.gov*)

(1) Name of Board/Commission:

_____

_____

_____

Please tell us why you are interested in serving on this board or commission.

_____

_____

_____

What contribution would you most like to make?

_____

_____

_____

Additional pertinent information or references:

_____

_____

_____

(2) Name of Board/Commission:

_____

_____

_____

What contribution would you most like to make?

_____

_____

_____

Additional pertinent information or references:

_____

_____

_____

Applications are maintained on file in the City Secretary's office for a period of one year. Should you need additional information, please call us at 432-685-7430.

Signature of Applicant

_____

Applications may be submitted online via email or print in order to send by mail or fax:

City of Midland

City Secretary's Office

PO Box 1152

Midland, TX 79702

FAX: (432) 685-7433

APPLICATION FOR CITY OF MIDLAND BOARDS/COMMISSIONS/COMMITTEES

As an applicant for a City board, commission, or committee, please be advised that all information on this application is subject to the Texas Open Records Act and will be available to the public.

PLEASE TYPE OR PRINT CLEARLY:

Date: 3/2/2020

Name: Wes Gotcher

Phone: 432.853.9783 **(Home)**

Address: 6824 Island Circle

432.682.2510 **(Business)**

Midland TX 79707

Email: wes@moriahgroup.net

(City) (State) (Zip)

I am [✓] **I am not** [ ] **a U.S. Citizen**

Please tell us about yourself:

Are you a graduate of Midland 101? [ ] **yes** [✓] **no**

I have lived in Midland 9 **years.**

Occupation: Commercial Real Estate Broker

Professional and/or Community Activities:

Leadership Midland Graduate, Missions Coordinator | Golf Course Road Church of Christ,

Board Member &Assistant Baseball Coach | Mid-Cities Little League Baseball, Ministry Leader | Teen Challenge of the Permian

Basin

What is your personal vision for the City?

Midland is a special place because it rewards hard work and ingenuity, is a great place to raise a family and provides a small town

feel despite having a major place on the world's stage when it comes to oil production. I want to do what I can for a City that has

been a blessing to me and my family.

Please specify any time constraints you may have.

My schedule is fairly flexible during business hours since I set my own appointments.

Please list below the Board(s) or Commission(s) on which you are interested in serving:

(You can find a complete and current list on the City's website at www.midlandtexas.gov**)**

(1) Name of Board/Commission:

1. Midland Development Corporation, 2. Midland Housing Authority, 3. Planning and Zoning Commission

Please tell us why you are interested in serving on this board or commission.

My 22-year career has been in commercial real estate and would be complementary to the Boards/Commissions referenced above.

What contribution would you most like to make?

Provide feedback and decision-making based on career in a complementary field.

Additional pertinent information or references:

Dale A. Brown - Former City Council Member

Spencer Robnett - City Council Member

Bobby Burns - Former Mayor

(2) Name of Board/Commission:

What contribution would you most like to make?

Additional pertinent information or references:

Applications are maintained on file in the City Secretary's office for a period of one year. Should you need additional information, please call us at 432-685-7430.

Signature of Applicant

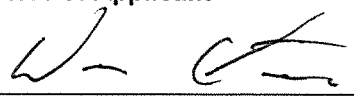

Applications may be submitted online via email or print in order to send by mail or fax:

City of Midland

City Secretary's Office

PO Box 1152

Midland, TX 79702

FAX: (432) 685-7433

Submit Via Email

Print Application

MIDLAND
Feel the Energy!

APPLICATION FOR CITY OF MIDLAND BOARDS/COMMISSIONS/COMMITTEES

As an applicant for a City board, commission, or committee, please be advised that all information on this application is subject to the Texas Open Records Act and will be available to the public.

PLEASE TYPE OR PRINT CLEARLY:

Name: Sharla Hotchkiss

Address: 1701 Community Lane

Midland Midland, ·

(City) (State) (Zip)

Date: 4/3/2020

Phone: 432-684-6140 **(Home)**

_____ **(Business)**

Email: sehotch@gmail.com

I am [✔] **I am not** [ ] **a U.S. Citizen**

Please tell us about yourself:

I have lived in Midland 49 **years.**

Are you a graduate of Midland 101? [ ] **yes** [✔] **no**

Occupation: retired

Professional and/or Community Activities:

I have been active in most aspects of the community as a volunteer and nonprofit trainer/facilitator.

Past member of P & Z, City Council and other City commissions. Have held leadership roles in state organizations.

Husband Bart and i have owned and operated small businesses (now retired).

What is your personal vision for the City?

Midland is family friendly, supports business developmet, is progressive and welcoming.

We are resilient and hard working with strong values.

Please specify any time constraints you may have.

Please list below the Board(s) or Commission(s) on which you are interested in serving:

(You can find a complete and current list on the City's website at www.midlandtexas.gov**)**

(1) Name of Board/Commission:

I am interested in several commissions: Midland Development Corporation, Hotel/Motel, Parks, Animal Services

Please tell us why you are interested in serving on this board or commission.

These are areas of special interest to me. The provide needed services to the community and will utilize my skills & knowledge.

What contribution would you most like to make?

MDC: I would love to work with this visionary entity. The MDC provides a dedicated staff to research & vette investments for development. It is professional, has impact & provides leadership & innovation for the City. I enjoyed attending meetings with them while on City Council and would appreciate being appointed as a member.

Additional pertinent information or references:

i enjoy research and detail work. Have a broad knowledge of the City. i think this would be interesting - I hate to be bored!

(2) Name of Board/Commission:

HOTEL/MOTEL: as a past liaison to this board i was able to see the impact of our tax dollars on the entities that bring visitors to our community. It is fun to research and give grants to these entities. PARKS: always has been a speial interest to me. I'm currently involved with doing a tree inventory of the parks. Believe parks and open spaces are important for Midland's quality of life.

What contribution would you most like to make?

Continued from above: ANIMAL SERVICES has a special role that demands excellent service and difficult choices for abandoned animals in this town. I'd like to help design their new volunteer opportunities as the facility expands. I was involved in the funding and planning for the new facility & could be helpful during the construction process.

Additional pertinent information or references:

It would be great to continue to serve the City of Midland as a volunteer. Use me if you need me!

Applications are maintained on file in the City Secretary's office for a period of one year. Should you need additional information, please call us at 432-685-7430.

Signature of Applicant

Sharla Hutchison

Applications may be submitted online via email or print in order to send by mail or fax:

City of Midland
City Secretary's Office
PO Box 1152
Midland, TX 79702
FAX: (432) 685-7433

Submit Via Email

Print Application

APPLICATION FOR CITY OF MIDLAND BOARDS/COMMISSIONS/COMMITTEES

As an applicant for a City board, commission, or committee, please be advised that all information on this application is subject to the Texas Open Records Act and will be available to the public.

PLEASE TYPE OR PRINT CLEARLY:

Date:_____

Name:_____

Phone:_____ **(Home)**

Address:_____

_____**(Business)**

Email:_____

_____

(City) (State) (Zip)

I am ____ I am not ____ a U.S. Citizen

Please tell us about yourself:

Are you a graduate of Midland 101? ____yes _____no

I have lived in Midland _____ years.

Occupation:_____

Professional and/or Community Activities:

_____

_____

_____

What is your personal vision for the City?

_____

_____

_____

Please specify any time constraints you may have.

_____

_____

_____

Please list below the Board(s) or Commission(s) on which you are interested in serving:

(You can find a complete and current list on the City's website at *www.midlandtexas.gov*)

(1) Name of Board/Commission:

_____

_____

_____

Please tell us why you are interested in serving on this board or commission.

_____

_____

_____

What contribution would you most like to make?

_____

_____

_____

Additional pertinent information or references:

_____

_____

_____

(2) Name of Board/Commission:

_____

_____

_____

What contribution would you most like to make?

_____

_____

_____

Additional pertinent information or references:

_____

_____

_____

Applications are maintained on file in the City Secretary's office for a period of one year. Should you need additional information, please call us at 432-685-7430.

Signature of Applicant

_____

Applications may be submitted online via email or print in order to send by mail or fax:

City of Midland

City Secretary's Office

PO Box 1152

Midland, TX 79702

FAX: (432) 685-7433

MIDLAND
Feel the Energy!

APPLICATION FOR CITY OF MIDLAND BOARDS/COMMISSIONS/COMMITTEES

As an applicant for a City board, commission, or committee, please be advised that all information on this application is subject to the Texas Open Records Act and will be available to the public.

PLEASE TYPE OR PRINT CLEARLY:

Date: 1/29/2020

Name: Robert W Lehrer

Phone: 432-556-8503 **(Home)**

Address: 1910 W Tennessee

432-684-0960 **(Business)**

Midland Texas 79701

Email: rlehrer65@gmail.com

(City) (State) (Zip)

I am [✓] **I am not** [ ] **a U.S. Citizen**

Please tell us about yourself:

Are you a graduate of Midland 101? [ ] **yes** [✓] **no**

I have lived in Midland 12 **years.**

Occupation: Financial Advisor

Professional and/or Community Activities:

Board Chair; the Breaking Bread Kitchen

Past President; Midland, Odessa Business & Estate Planning Council

Midland High Booster Club, Stonegate Fellowship, The Fields Edge, Elementary Mentoring Programs

What is your personal vision for the City?

Volunteering and serving in our community is really low at this point. I would like to see an emphasis of true serving (whether physically or financially) in our community. I see a lot of young people hiding in our city. They don't know their neighbors across town or in other districts. We need to look for way of cooperation and serving together.

Please specify any time constraints you may have.

I try to be in my office from 9:00am to 3:00pm. I do have some commitments where I already serve but can maneuver fairly easily.

Please list below the Board(s) or Commission(s) on which you are interested in serving:

(You can find a complete and current list on the City's website at *www.midlandtexas.gov*)

(1) Name of Board/Commission:

Midland Housing Authority Commission

Please tell us why you are interested in serving on this board or commission.

Through my work with different ministries in the southeast side of town, I see where housing is truly an issue. Any apartment development that works is quickly rented with a shortfall still remaining. There are also, so many vacant and/or abandoned houses

in this area that might be used for low income housing? It at least needs to be looked at from different angles.

What contribution would you most like to make?

Through my research with non-profits in other communities and finding different ways to solve problems, I am finding that there are so many answers to the needs that we have and that with our resources in Midland we can truly get stuff done if we really want to.

Additional pertinent information or references:

(2) Name of Board/Commission:

What contribution would you most like to make?

Additional pertinent information or references:

Applications are maintained on file in the City Secretary's office for a period of one year. Should you need additional information, please call us at 432-685-7430.

Signature of Applicant

Robert W Lehrer Digitally signed by Robert W Lehrer
Date: 2020.01.29 09:44:50 -06'00'

Applications may be submitted online via email or print in order to send by mail or fax:

City of Midland
City Secretary's Office
PO Box 1152
Midland, TX 79702
FAX: (432) 685-7433

Submit Via Email

Print Application

APPLICATION FOR CITY OF MIDLAND BOARDS/COMMISSIONS/COMMITTEES

As an applicant for a City board, commission, or committee, please be advised that all information on this application is subject to the Texas Open Records Act and will be available to the public.

PLEASE TYPE OR PRINT CLEARLY:

Date: 2/3/2020

Name: Douglas Lance Lunsford

Phone: 432-685-3407 **(Home)**

Address: 1811 Kensington Lane

432-210- 3368 cell **(Business)**

Midland TX 79705

Email: doug.lunsfordmidlandtx@yahoo.com

(City) (State) (Zip)

I am [✓] **I am not** [ ] **a U.S. Citizen**

Please tell us about yourself:

Are you a graduate of Midland 101? [ ] **yes** [✓] **no**

I have lived in Midland 52 **years.**

Occupation: Retired Oil Field Log Analyst

Professional and/or Community Activities:

Boy Scouts - Assistant SM- Board Member - Eagle Scout - Vigil Honor OA - Silver Beaver - Woodbadge Trainer

former President Sunrise Rotary Club - Community Bible Study - Vice President Partners SS Class 1st Methodist Church

Society of Petroleum Engineers - American Society of Professional Well Log Analysts - West Texas Geological Society

What is your personal vision for the City?

I have returned to Midland four times in my career; this is my home. I want more of our HS Grads to return to Midland to raise familie

To lead our city in growth to attract and retain entertainment facilities to encourage growth. Attracting industry that aids in building

Midland more than just petroleum industry;an educational system growing and leading to leadership on state level and national level.

Please specify any time constraints you may have.

I am retired and I have very good health with a drive to make Midland the city I see in my head, in my dreams, and lead in that

direction. I read to K-I grade at Burnet Elementary to grow their minds and lead away from status quo. That Tuesday morning

and Monday night CBS with Scouts on Tuesday and Wednesday Bible Study.

Please list below the Board(s) or Commission(s) on which you are interested in serving:

(You can find a complete and current list on the City's website at www.midlandtexas.gov)

(1) Name of Board/Commission:

Parks and Recreation Commission; designed program and facilities for five Boy Scout Councils and three churches

Please tell us why you are interested in serving on this board or commission.

I want to help Midland grow because I am a Native Midlander. My grandmother came here in a covered wagon from Greenville TX

I love Midland and I have been in boom towns, I grew up in booms and busts; I raised a growing family in many towns like Midland

to make it easier for the new "kids" coming along to have it easier than we had it. Dennis the Menace was new when I was 8.

What contribution would you most like to make?

I have the desire to make things better for people coming to Midland and the area. I have drive for Midland to be the epitome of what family cities should be in Texas not just the Permian Basin. I have lived the life through boom and bust;to lead Midland into diverse industry, increased educational and entertainment venues. I have the abilities to grow from humble home to be example.

Additional pertinent information or references:

Degree in Industrial Technology and Distribution, oil field engineer and manager, professional Boy Scout These changes in my life give me the inside track on lifestyle to newcomers and 'natives' alike. My Dad came here in WWII stayed to make a life for a new Midland born wife: an oil field carpenter seen as "oil field" in the new Spraberry Boom.

(2) Name of Board/Commission:

Planning and Zoning Commission

What contribution would you most like to make?

A more efficient and effective business of the growth of Midland/area for safe and secure business growth and home ownership. I have worked in obtaining building permits and working within the system to add new opportunities for continued prosperity. A customer oriented delivery of opinions and standards maintaining the high standards we already have in Midland.

Additional pertinent information or references:

Building programs in BSA required new facilities fitting the framework of safe operations and maintaining standards of the existing area. This experience would allow communications with benefits for the citizens of Midland while keeping high measures of quality Background in education and industry/ construction and governance

Applications are maintained on file in the City Secretary's office for a period of one year. Should you need additional information, please call us at 432-685-7430.

Signature of Applicant

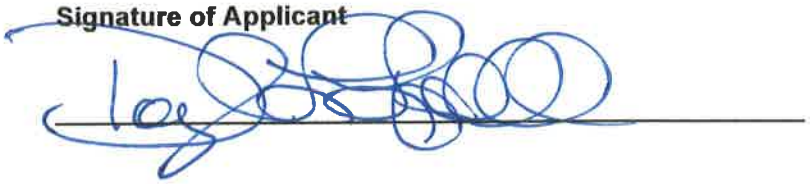

Applications may be submitted online via email or print in order to send by mail or fax:

City of Midland

City Secretary's Office

PO Box 1152

Midland, TX 79702

FAX: (432) 685-7433

Submit Via Email

Print Application

Douglas Lance Lunsford

1811 Kensington Lane • Midland, Texas 79705
(432) 685-3407 Home (432) 210-5165 Cell

Doug.lunsfordmidlandtx@yahoo.com

Accomplishments

- I have a strong, positive, high level of energy that develops and maintains relationships with key accounts and new customers. My passion in the oil energy industry is to present energy clients with value added technical solutions to their services and assist in solving their problems.
- Possessing strong negotiating skills with positive communication abilities, with successful selling experience within the oil and gas industry, I have the demonstrated the ability to understand sales processes while building strong relationships to close the business sale.
- A well-respected Sales professional I am capable of developing new accounts while growing existing accounts of large oil and gas companies as well as independent operators.
- My experience allows me to work closely with operations and field sales not only in the Permian Basin but throughout the United States
- These include: Wireline Open Hole Engineer, Log Analyst and Sales in Ahwaz, Iran, the Permian Basin Texas and Williston Basin of North Dakota. Pressure Pumping/Frac Sales in Permian Basin OneStim
- Weatherford Product Champion for SecureView (WFT Casing Inspection, Cement Evaluation), Specialty Perforating including StimGun services and Completion Logging
- For nine (9) years I served as Desk Engineer Chevron Mid Continent Business Unit for all Baker Hughes Services in addition to specific service as Open Hole Logging, Cased Hole Completions and new employee trainer for Cement Evaluation and Casing Evaluation; Basic and Specialty Perforating; Frac and pressure pumping
- Skillful Management of Market Information, TAM, Budget, Market Planning and Special Projects; including Social Networking, LinkedIn, Power User inSalesForce.com

Professional Experience

Account Lead – OneStim – Schlumberger ▪ Midland TX ▪ 02/01/2018 – 08/17/2019 (RIF)

- Develop a new active clientele and building existing customer base and increasing it for maximum production for the newly formed OneStim – merged from Frac/PDP/Completion Tools of Schlumberger Ltd. and Weatherford International.
- Increase sales and operations performance with merged equipment and services
- Develop sales plans using TAM with local operators for Pump Down Perforating
- Increase awareness of the OneStim Service Line with Permian Basin Operators
- Assist Science Technology Group with specifications for delineating the Parent/Child relationships and prevent collisions

- Introduce SLB Wireline Division and Completions Tools Division with personal operator contacts for added market

Technical Sales Representative IV – Weatherford Intl. ▪ Midland TX ▪ 11/11/2 M014 – 02/01/2018 Merged with OneStim

- Develop an active clientele for the SecureView Casing Inspection segment building existing customer base and increasing it for maximum production
- Increase sales and operations performance through education and marketing of the SecureView system
- Improve marketing for the Ultrasonic Radial Scanner service (UltraView) in the horizontal segment of drilling with the light cement and casing wear objectives.
- Increase awareness of the SecureView Logging systems in the Permian Basin targeting major production accounts.
- Increase the awareness of CH Completions logging including Production Logging and Pipe Recovery.
- Develop sales with local operators for perforating completions and Pump Down Perforating during the turn down of 2015. To include specialty perforating services such as WEM and StimGun services. Experientially grow the PDP services for the Permian Basin.
- 2016-2017 – Develop sales and marketing for PDP in the Horizontal Programs of the Permian Basin; Casing Inspection Services with SecureView that includes UltraView, FluxView, CalView, and BondView as a leader in sales and Interpretation as well as training.
- Developed three RealResults presentations presented by Weatherford in Sales Marketing for UltraView, CalView, and

Operations Marketing Account Manager II–Baker Hughes Wireline Services • Midland, TX ▪ 8/1/2005 – Nov 2014

- Maintain sales strategy directly related to completions, casing inspection, Pipe Recovery/Production Logging and Horizontal and Stage Perforating.
- Increase sales performance for Open Hole logging programs directly related to Permian Basin clientele
- Develop sales techniques for casing inspection with both corrosion defects and/or mechanical defects;
- Design and conduct training for clients to understand and use Wireline products correctly and lower their operational expenses for Value Added Performance.
- Collaborate in cross divisional team efforts for utilizing Blue Well Bore solutions to customer needs.

Director of Support Service–BSA • Irving TX ▪ Sep 1989 – Aug 2005
Abilene, TX – San Angelo TX – Jacksonville FL – Miami Lakes FL – Corpus Christi TX

- Managed 27 professional and 18 clerical personnel in business development of organization with $25 million budget
- Developed and maintained annual budgets containing costs of from $1.7MM to $25MM in four geographic locations

- Planned and guided two (2) construction projects for $4.5 MM in Orange Park and Hawthorne, FL. Came in under budget and two (2) months earlier than scheduled.
- Established a sales plan to divest company of a camp property valued at $950M which sold for $13.2MM to a non-profit land conservation and restoration group in Inverness FL
- Managed a large number of volunteers and professionals in program, membership and Finance in five (5) different locations.
- Promoted the branding and mission of the organization in all operations and business practices

Sales Engineer • Rice Engineering (DuoLine) • Midland TX and Wichita KS • Jan 89-Jul 89

- Developed new client base for lined tubular use in hazardous area production
- Rice had no experience with sales marketing in the oil industry; developed sales plan for hazardous materials produced
- Instructed two more sales people on use of the new company sales plan in conjunction with their technical training on the product
- Increased sales of product in three major field areas and introduced two new areas including the Yates with Marathon in Pecos Co. TX

VP Operations/Sales Fifty Five Well Service • Midland TX / Lovington NM • Mar 1986- Oct 1989

- Managed a staff of sixty eight (68) well service personnel including three pushers, two sales people two clerical staff and one mechanic.
- Developed and maintained profitable deep work over unit operations with organization and new reporting system on computers
- Build new budget and operating system base for ten (10) deep well workover units
- Developed new Safety Plan with Safety and Company Policy Handbook to decrease Insurance costs and provide safe operations for employees
- Produced a Company Plan of Operation Handbook for 55 with Charles Gillespie Oil personnel included
- With increased quality of service, decreased costs, and increasing sales/marketing was able to lease two more shallower units during the decrease of operating oil prices and declining drilling rigs
- Increased sales and public relations during an industry slowdown operating with a profit and no rigs shut down.

Production Technician / Intern Schoolboy • The Superior Oil Company • Midland and Conroe TX Jun 1970 – Aug 1972 and **Jan 1978-June 1979**

- Rejoined as Production Technician in February 1978 serving as on site company representative for all logging jobs offshore Sabine Pass where Dresser Atlas was logging and perforating
- OH company representative for logging wells in Conroe, Laredo, and Offshore Texas for all Wireline Service Companies
- Assisted with well completions for wireline logging and perforating offshore and land locations
- **1970-1972** –

- Worked Summers, Holidays as a laborer with Construction Carpenter and Production Department from June 1970 until August 1972
- During school sessions at Odessa College, worked as laborer and weekend Yard Gate safety watch

Logging Engineer and Log Analyst – Sales •Dresser Atlas • Odessa TX, Ahwaz Iran, Williston ND, Midland TX

- OH Hole Engineer, in Odessa running Heavy Logger managing a crew of three (3) in Permian Basin during boom years averaging 95 hours a week (1975-76)
- In Ahwaz, Iran 1976-78 worked a Heavy Logger in the toughest terrain of Iran managing a crew of eight (8). Services also included some Free Point/Back-Off and completions logging including CBL and perforating from my OH Truck
- Williston ND opened a base with manager in 1979 with one (1) OH Logger and two (2) CH completion trucks; added Vertilog specialty truck ending with three (3) OH and five (5) Completion vehicles and managing one (1) sales engineer
- Midland TX as Sr. Sales Engineer promoted to Log Analyst (Sales); managed sales for OH, NLL Pulsed neutron, Carbon Oxygen, and Vertilog for two major companies and a host of independents.

Wireline and Sales Skills

Open Hole Logging
Completions Logging
Pulsed Neutron
Perforating
Specialty Perforating (StimGun)
Casing Inspection
Cement Evaluation
Production Logging
Pipe Recovery
Tubing Conveyed Perforating
Stage Perforating (PnP)
Horizontal Pump Down (PDP)
Lunch and Learn Instruction
Financial Administration
Total Quality Management
High Performance Sales
Professional Sales Seminar
Negotiation I
Customer Relations Mgmt
Power Presentations
Professional Sales Seminar
Effective Time Management
SalesForce.com / eCRM
VDIS – Logistics Mgmt
Diversification/Team Building
Land Safe / Safe and Well
Export Control
Emergency Operation Planning
HSE&S Observation Process
MS Office - Power Point, Excel, Word
International Workplace Harassment – Managers
Dale Carnegie Public Speaking and Sales Seminar
Train the Trainer

Hobbies and Outside Interests

Eagle Scout, Vigil Honor, Silver Beaver
Boy Scouts / Assistant Scout Master / OA
James E. West Fellow - BSA
Rotary International
Paul Harris Fellow – Rotary
Genealogy
Wood Working and Toy Making
Native American - Indian Lore
Singing as part of Woapalane Drum
Camping – Fishing – Kayaking

Education

West Texas A&M University – Canyon Texas
Bachelor of Science – Industrial Technology – May 1975

Odessa College – Odessa Texas Sep 1970-May 1972
General Studies - Geology

APPLICATION FOR CITY OF MIDLAND BOARDS/COMMISSIONS/COMMITTEES

As an applicant for a City board, commission, or committee, please be advised that all information on this application is subject to the Texas Open Records Act and will be available to the public.

PLEASE TYPE OR PRINT CLEARLY:

Date:_____

Name:_____

Phone:_____ **(Home)**

Address:_____

_____**(Business)**

_____

Email:_____

(City) (State) (Zip)

I am ____ I am not ____ a U.S. Citizen

Please tell us about yourself:

Are you a graduate of Midland 101? ____yes _____no

I have lived in Midland _____ years.

Occupation:_____

Professional and/or Community Activities:

_____

_____

_____

What is your personal vision for the City?

_____

_____

_____

Please specify any time constraints you may have.

_____

_____

_____

Please list below the Board(s) or Commission(s) on which you are interested in serving:

(You can find a complete and current list on the City's website at *www.midlandtexas.gov*)

(1) Name of Board/Commission:

_____

_____

_____

Please tell us why you are interested in serving on this board or commission.

_____

_____

_____

What contribution would you most like to make?

_____

_____

_____

Additional pertinent information or references:

_____

_____

_____

(2) Name of Board/Commission:

_____

_____

_____

What contribution would you most like to make?

_____

_____

_____

Additional pertinent information or references:

_____

_____

_____

Applications are maintained on file in the City Secretary's office for a period of one year. Should you need additional information, please call us at 432-685-7430.

Signature of Applicant

_____

Applications may be submitted online via email or print in order to send by mail or fax:

City of Midland

City Secretary's Office

PO Box 1152

Midland, TX 79702

FAX: (432) 685-7433

MIDLAND
Feel the Energy!

APPLICATION FOR CITY OF MIDLAND BOARDS/COMMISSIONS/COMMITTEES

As an applicant for a City board, commission, or committee, please be advised that all information on this application is subject to the Texas Open Records Act and will be available to the public.

PLEASE TYPE OR PRINT CLEARLY:

Date: 11/30/2020

Name: Lynn Richardson

Phone: 901-568-3109 (Home)
432-227-5970 (Business)

Address: 1405 San Francisco Avenue
Midland TX 79705
(City) (State) (Zip)

Email: Captainsafety55@gmail.com

I am ☒ I am not ☐ a U.S. Citizen

Please tell us about yourself:

Are you a graduate of Midland 101? ☐ yes ☒ no

I have lived in Midland 7 years.

Occupation: Regional HSE Manager

Professional and/or Community Activities:

Vice-President Permian Basin Chapter American Society of Safety Professionals
Board of Directors for Adobe Meadows HomeOwners Association
Fairmont Park Church of Christ, Elder and Active in Church work

What is your personal vision for the City?

Our city needs to come together and work together to solve the problems of our community. We need to plan our future rather than dwell on our past, we need to learn from our mistakes and not repeat them.

Please specify any time constraints you may have.

My only time constraint would be if I am out of town on business.

Please list below the Board(s) or Commission(s) on which you are interested in serving:

(You can find a complete and current list on the City's website at www.midlandtexas.gov)

(1) Name of Board/Commission:

Midland Spaceport Development Corporation

Please tell us why you are interested in serving on this board or commission.

I grew up in Alabama 60 miles ~~west~~ of Huntsville during the space race to the moon. My sister, brother-in-law and uncles worked for NASA, Boeing and others to put us on the moon. If I can help get Midland part of the next generation of space travel

then I want to be able to help secure that for us.

What contribution would you most like to make?

I would like to supply my technical expertise as an engineer with a deep love for the Space Program to help find the right match for Midland.

Additional pertinent information or references:

see Attached Resume

(2) Name of Board/Commission:

What contribution would you most like to make?

Additional pertinent information or references:

Applications are maintained on file in the City Secretary's office for a period of one year. Should you need additional information, please call us at 432-685-7430.

Signature of Applicant

Thomas Lynn Richardson

Applications may be submitted online via email or print in order to send by mail or fax:

City of Midland

City Secretary's Office

PO Box 1152

Midland, TX 79702

FAX: (432) 685-7433

Submit Via Email

Print Application

THOMAS LYNN RICHARDSON
1405 San Francisco Avenue
Midland, Texas 79705
901-568-3109 (C)
Captainsafety55@gmail.com

ACCOMPLISHMENTS AND PROFICIENCIES

- Two facilities accepted into OSHA Voluntary Protection Program (Region IV) – worked on third facility that achieved VPP status after I left
- Served as Corporate HS&E Manager, Division HS&E Manager, and Plant HS&E Manager in various locations
- Managed safety, environmental and engineering professionals at multiple locations
- Implemented Industrial Hygiene Programs at several plants
- Taught seminars and lectured at conferences
- Implemented Behavior based safety programs at several locations with outstanding results in incident reduction and employee participation
- Coordinated large-scale drills with fire and HAZMAT units at multiple plants
- Developed or upgraded PSM programs at numerous locations
- Wrote or updated Risk Management Plans at numerous locations
- Negotiated settlements with OSHA, EPA, and Local Agencies
- Written facility, division, and corporate policies and procedures
- Achieved Safety and Environmental awards for Plants
- Developed close working relationships with OSHA and EPA in multiple regions
- Prepared budgets for Corporate, Division, and Plant level for HS&E
- Served as Radiation Safety Officer at multiple locations.
- Conducted Seminars for HS&E Topics at Junior College and filmed HAZCOM tape series for Carpet and Rug Institute
- Certified by both accreditation agencies for Safety (CSP, CSS, CSM)
- Media Trained
- Facilitated Responsible Care Committees at multiple locations
- Filed comments with OSHA and EPA on new regulations
- Represented Zeon Chemicals with testimony at State Congressional Committee on Regional Waste Compact
- Chair of Central States Region PSM Network for AFPM 2017-2018; served on multiple API subcommittees
- Managed corporate conversion of MSDSs to SDSs
- Speaker at multiple AFPM conferences
- Wrote Alternate Security Plan (Homeland Security) for Refinery
- Experienced auditor for Safety, Process Safety, and Industrial Hygiene
- Designated as company site representative for depositions
- Hold Green Belt Lean Six Sigma

EDUCATION

BS Auburn University
Chemical Engineering

MS Eastern Kentucky University
Safety, Security, and Emergency Management (4.0 GPA)

EXPERIENCE

2018 – Present **CHEMPLEX | SOLVAY-NOVECARE**
Regional HSE Manager

Responsible for HSE support for multiple plants along with assisting with DOT Fleet Management and site security. Based in Midland with direct responsibility for three local sites. Implementing new corporate Life Saving Rules while updating current policies and procedures. Writing Division HSE Policies to support corporate policies. Involved in new Industrial Hygiene system rollout along with reviewing new policies being developed at Division and Corporate levels. Supporting the Corporate auditing program for PSM and Occupational Safety.

2017 – 2018 **DELEK US REFINING, BIG SPRING, TEXAS REFINERY**
Director of Safety, Process Safety, and Security

See Below – Delek acquired Alon in June 2017

2013-2017 **ALON USA REFINING, BIG SPRING, TEXAS REFINERY**
Director of Safety, Process Safety, and Security

Manage the site safety program, process safety management (PSM) program, Voluntary Protection Program (VPP) effort, and site security which includes Homeland Security, Write new and revise existing procedures; Revived Industrial Hygiene program; Responsible for Emergency Response Team; Upgraded emergency response system and equipment; Moved emergency response system to National Incident Management System (NIMS); Conducted annual multi-agency emergency drills; Reduced overdue PSM action items and post-startup MOC action items; Upgraded PHAs for units along with facilitation; Revised Risk Management Plan; Developed site safety manual for turnarounds and for general plant; Implemented behavior-based job audit system; CPR/First Aid Instructor at Refinery; Certified First Responder; Revised Homeland Security Documentation; IMPACT and ISNETWORLD administrator; Investigate accidents; Developed 2014, 2015, 2016 , 2017 and 2018 Safety, Security, and PSM budgets; Working with OSHA Challenge Program to achieve VPP status; Implementing Ergonomics Program; Negotiated settlements with OSHA and Supplemental Environmental Project

(SEP) with EPA; Supervise two safety professionals, VPP coordinator, one administrative assistants, and the security force.

2005 – 2013 **VALERO ENERGY COMPANY, MEMPHIS REFINERY**
Staff Safety Engineer

Provide support for both Occupational Safety and Process Safety Management; Member of HAZMAT Team, Oil Spill Team, and Medical Team; Incident Commander Trained; Incipient Fire Responder; Safety Officer in EOC; American Heart CPR/First Aid Instructor at Refinery; Certified EMR; Write numerous policies and procedures; Provide Industrial Hygiene Support; Provide Ergonomics Support Qualified PHA facilitator and conduct / assist in performing HAZOPS; Chair Joint Health and Safety Committee; Completed Valero HS&E Auditor Program and served as either a Safety or PSM auditor on Corporate Audits; Help to maintain the PSM Database; IMPACT and ISNETWORLD Administrator at refinery; Provide monthly safety statistics / metrics for Refinery; TOP and Root Cause Incident Investigation Trained; Provide various training as needed; Stepped in for several months in 2007 to fill in for PSM and Safety supervision when Departments were without a manager; prepared budgets in 2007 and 2011; Revised RMP; Compiled VPP Application and developed presentation for Decision Review Board and TOSHA; Serve as CTEMS representative for HS&E Department; Minor environmental assistance; Serve on Volunteer Council; Active as Valero Volunteer. (New Plant Manager did not want safety engineer)

1999 – 2005 **NUTRA-FLO COMPANY, SIOUX CITY, IOWA**
Corporate Environmental Health and Safety Manager

Responsible for all health, safety, and environmental programs including PSM for all Kay-Flo Industry locations (5) in Iowa and Nebraska. Managed one safety professional, one safety technician, corporate draftsperson, and one process engineer; responsible for half of the human resources function and part of the engineering and construction. Worked with all phases of the insurance program along with Worker's Compensation. Wrote and acquired training grants from state. Wrote programs, conducted training, conducted audits, and filed all required government paperwork for OSHA, EPA, and Local Agencies. Negotiated settlements for OSHA and EPA issues that were inherited; conducted Industrial Hygiene testing; filed air, water, and construction permits for multiple facilities; good working relationship with federal and state agencies; Facilitated HAZOPs. (Left for better position at Premcor / Valero Energy.)

1994-1999 **CONSULTING AND SALES, DENVER COLORADO**

Independent contractor for engineering, safety, and environmental work. Worked in sales to augment income.

1993-1994 **TOTAL PETROLEUM, INC., DENVER COLORADO**
Corporate Environment and Safety Auditor

Develop, wrote, and conducted comprehensive safety and environmental Audits including PSM. Wrote audit reports including recommendations for correcting deficiencies. Provided consultation to facilities for training and on rules and regulations. Provided PSM support after audits to gain compliance.

1992-1993 **COASTAL REFINING AND MARKETING, INC., KANSAS REFINING DIVISION, WICHITA, KANSAS**
Division Manager of Environment, Health, and Safety

Supervise two safety and three environmental engineers. Responsible for all environmental, health, and safety activities including serving as the Division PSM Manager for three refineries and one pipeline system. Developed programs for compliance, interfaced with applicable agencies, conducted audits, wrote policies and procedures for EH&S. Negotiated settlements for inherited problems and supervised clean-up operations for environmental issues. Coordinated the development of a process safety program and conducted Process Hazard Analyses on processes. Developed budget for all four EH&S locations.

1990-1992 **ZEON CHEMICALS MISSISSIPPI, HATTIESBURG, MISSISSIPPI**
Safety and Environmental Manager

Provided all safety and environmental support for the facility. This included hazardous and non-hazardous waste disposal, plant safety program, audits, OSHA regulations and agency interface, EPA regulations including SARA III, TSCA, RCRA, CERCLA, storm water, clean air, and fugitive emissions. Engineering for safety and environmental projects. Conducted Process Hazard Analyses for local and corporate projects. Conducted corporate training in PHA, HAZWOPER, clean air, and Process Safety Management. Applied facility into the OSHA Voluntary Protection Program; conducted Industrial Hygiene testing.

1983-1990 **RHONE-POULENC, FORMERLY LYNDAL DIVISION OF COLLOIDS, FORMERLY HI-TEK POLYMERS LIQUID SPECIALTY CHEMICALS (DIVISION OF RTZ CHEMICALS), FORMERLY LYNDAL CHEMICAL COMPANY, DIVISION OF MILLMASTER ONYX GROUP INC., DALTON, GEORGIA**
Safety and Environmental Coordinator

Provided process and project engineering along with HS&E engineering. Developed spill plans, safety programs, hazardous and non-hazardous waste disposal, Industrial Hygiene sampling, wrote operator manuals,

purchased safety supplies, performed engineering and safety projects, constructed waste pre-treatment facility, obtained approval as OSHA VPP site

1982-1983 **KENDALL COMPANY, DIVISION OF COLGATE-PALMOLIVE, BETHUNE, SOUTH CAROLINA**
Temporary Process Engineer

Provided start-up support for new production line. Support included: trouble-Shooting, design modification, design specification, debugging of Equipment, operator training, safety training, process documentation, and production assistance.

1981-1982 **FIBER INDUSTRIES, DIVISION OF CELANESE CORPORATION, SALISBURY, NORTH CAROLINA**
Filament Development Engineer

Implemented R&D projects in the facility, conducted trials, completed special orders for production, troubleshooting of development products, analysis of daily operating problems to determine solutions, and safety audits.

1979-1981 **MONSANTO COMPANY, AGRICULTURAL PRODUCTS DIVISION, ANNISTON, ALABAMA**
Process and Project Engineer

Developed product improvement plans for two product lines. Developed project scopes, purchased equipment, installed equipment, trained operators, conducted safety audits, updated process documentation, process troubleshooting, part of start-up team for new process.

PROFESSIONAL ORGANIZATIONS

American Institute of Chemical Engineers 1979- Present
American Society of Safety Engineers (1984 – Present)
Vice-President West Tennessee Section for 2010-2012
President 2012-2014
American Society of Safety Professionals (Formerly ASSE)
Vice Present Permian Basin Section for 2019-2021
World Safety Organization (1986 – Present)
Member of Board of Directors (2012 - 2014, 2015 - 2017)
American Fuels and Petrochemical Manufacturers Association (2014 –Present)
Vice-Chair PSM Network for Central States Region (2015-2017)
Chaired PSM Network for the Central States Region (2017-2018)
Member of three subcommittees for API Assessment Revisions (2017-2018)

CERTIFICATIONS

Certified Safety Specialist (CSS)
Certified Safety Professional (CSP)
Certified Safety Manager (CSM)
Professional Member of ASSE
Certified Hazardous Materials Manager (expired)
Emergency Medical Responder (EMR)
OSHA 510 and 511 Certified
Green Belt Lean Six Sigma

CIVIC

President of Suburban Rotary Club (Sioux City, Iowa) 2004-2005
Vice-President Suburban Rotary Club 2003-2004
Fairmont Park Church of Christ, Elder and active in church work, 2014-Present
Past member of Board of Directors Howard County (Texas) United Way 2015-2016
Board of Directors for HOA 2017 – Present (term ends 2020)

OTHER

Hold a Transportation Worker Identification Credential (TWIC) card (trusted agent)

HONORS

Phi Kappa Phi and Golden Key Honor Societies at EKU for graduate school

APPLICATION FOR CITY OF MIDLAND BOARDS/COMMISSIONS/COMMITTEES

As an applicant for a City board, commission, or committee, please be advised that all information on this application is subject to the Texas Open Records Act and will be available to the public.

PLEASE TYPE OR PRINT CLEARLY:

Date: 1/14/2020

Name: P Lourcey Sams

Phone: 432.682.0793 **(Home)**

Address: PO Box 1933

432.682.8261 **(Business)**

Midland Texas 79702

Email: lsams@psams.com

(City) (State) (Zip)

I am [✓] **I am not** [ ] **a U.S. Citizen**

Please tell us about yourself:

Are you a graduate of Midland 101? [ ] **yes** [✓] **no**

I have lived in Midland 55 **years.**

Occupation: Oil and Gas-Self Employed

Professional and/or Community Activities:

American Assoc. of Petroleum Geologist, West Tx. Geological Society, American Assoc. of Petroleum Landmen,

Midland Chamber Goverment Affairs Committee-Past Member, President COM Parks & Rec. Board-Past Member, West Tx.

MS-Past, MCF Board, MUGS Board-Past, IOGCC-Past, Pecos River Resolution Corp.-Pres. COM Managed Comp. Committee

What is your personal vision for the City?

Continued growth concurrent with expansion of infrastructure (roads, affordable housing, health care, schools, police, fire, etc)

A continuing effort on the revitalization of downtown and an eye on diversification of the economy along with support of the all

important energy sector.

Please specify any time constraints you may have.

I am self employed and envision no time restrains as it would pertain to this application.

Please list below the Board(s) or Commission(s) on which you are interested in serving:

(You can find a complete and current list on the City's website at *www.midlandtexas.gov*)

(1) Name of Board/Commission:

Midland Development Corporation

Planning and Zoning Commission

Please tell us why you are interested in serving on this board or commission.

I have had a career being involved in the public sector as a volunteer and in management of various entities and would like to

continue to be involved.

What contribution would you most like to make?

My experience uniquely qualifies me to offer valuable input to the process of the Midland Development Corporation and/or the Planning and Zoning Commission and as such will improve the process for the City of Midland.

Additional pertinent information or references:

I am not new to the importance and functions of the board process. I have served on numerous boards. I have served as President of the City of Midland Parks and Rec. Board, Interstate Oil and Gas Commision for the State of Texas, current President of the Pecos River Resolution Corporation and many others from a community and private business perspective.

(2) Name of Board/Commission:

What contribution would you most like to make?

Additional pertinent information or references:

Applications are maintained on file in the City Secretary's office for a period of one year. Should you need additional information, please call us at 432-685-7430.

Signature of Applicant

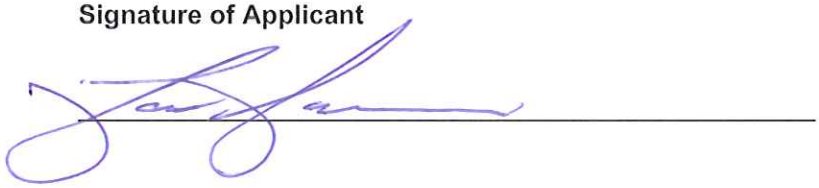

Applications may be submitted online via email or print in order to send by mail or fax:

City of Midland
City Secretary's Office
PO Box 1152
Midland, TX 79702
FAX: (432) 685-7433

Submit Via Email

Print Application

P. LOURCEY SAMS

1606 D Street

Midland, Texas 79705

432/ 682-0793

Over forty years of exploration and production management experience. Managed several exploration and production programs and joint ventures in most major petroliferous basins in the lower United States including the Permian Basin, South Texas, Texas Gulf Coast, Louisiana, the Rocky Mountain Region and California. Administration and management responsibilities have included personnel management and decision making over the specific functions of Engineering, Land, Geology, Geophysics, and Finance.

- Exploration and Production
- Acquisition and Divestitures
- Private Placement and Joint Venture Financing
- Land, Legal and Trade Negotiation
- Knowledge and Experience of Most Domestic Producing Areas
- Extensive Network of Industry Contacts

EXPLORATION AND PRODUCTION

Supervised and directed exploration programs and prospect development in the areas of: (1) Land and Legal, (2) Geology, (3) Geophysics and (4) Engineering. Involved in the Exploration Discovery, Management and Production of over 100 MMBOE.

Decision making managerial experience in drilling, testing, completion, workovers, and production operations

Directly involved in excess of $100 MM in Exploration Drilling

Jointly developed business plans and exploration strategies for specific geological programs and worked with multi-disciplinary teams to finance and implement these

plans

Administrative manager of partnerships and joint ventures

ACQUISITION AND DIVESTITURES

Experience in evaluation, due diligence and acquisition of producing properties

Working experience with industry venture capital and equity funds

Working experience with bank finance from proposal to closing

Prepared brochures, initiated contracts and closed producing property sales

PRIVATE PLACEMENT AND JOINT VENTURE FINANCING

Initialized contacts and finalized capital contributions of private placement offerings and joint venture financing

Supervised preparation of partnerships and joint venture prospectuses

Conducted private placement and industry presentation of exploration programs

Supervised and maintained financials, appraisals and reporting for the benefit of investors

LAND, LEGAL AND TRADE NEGOTIATION

Managerial and working experience in all phases of land management

More than forty years of decision-making managerial responsibilities in trade negotiations, contracts, lease acquisition and maintenance, unitization, government regulation and litigation

Negotiated and administered exploration agreements, operating agreements, farmins, farmouts, leases, etc.

Federal, state and fee Land experience

Retained and supervised outside council

OUTSIDE MANAGERIAL EXPERIENCE

Co-founder and Board Of Managers American Abstract, a federal, state and fee title company in Santa Fe, New Mexico

Professional Landman Schools, Advisory Board Member, Oklahoma City, Oklahoma

Director, Pennant Pipeline, Inc. - Management experience with gas gathering systems in Oklahoma

EMPLOYMENT HISTORY

2002-Present	Brazos Valley Water Alliance, L. P.-CEO and Marketing Director of Brazos Valley Water Works. LLC. general partner for Brazos Valley Water Alliance, L. P. Responsible for all aspects of the business from the acquisition of rights to the marketing, lobbying, coordinating and implementation of the company's plan of development.
1998- Present	Pennant Development and Production, LLC., President. Acquisition and Operation of Producing Properties
1988-Present	Banner Energy, Inc.- President. Banner is an administration entity for numerous limited partnerships and joint ventures engaged in exploration and production

1983-1988	Banner Energy, Inc.- Vice President
1981-1983	Banner Petroleum II, Ltd., Houston, Texas. Worked with multi-disciplinary team in the generation and drilling of exploration prospects in South Texas, Gulf Coast Texas and Louisiana
1977-1981	Amoco Production Company- Houston, Texas. Resigned as Senior Landman, West Texas and New Mexico Division

EDUCATION

1977	BA- Austin College Sherman, Texas

INDUSTRY SCHOOLS

Well log interpretation
Schlumberger
Houston, Texas

Southwest Legal Foundation
Annual Conference
Dallas, Texas

Geology and Well Drilling
Amoco Training Center
Tulsa, Oklahoma

Exploration Economics
Amoco Training Center
Tulsa, Oklahoma

Communication and Negotiation
Amoco Training Center
Tulsa, Oklahoma

Unitization
Amoco Training Center
Tulsa, Oklahoma

Oil and Gas Leasing
Amoco Training Center
Tulsa, Oklahoma

Structuring Deals- Basic
Amoco Training Center
Tulsa, Oklahoma

Structuring Deals- II
Amoco Training Center
Tulsa, Oklahoma

Introduction to Exploration
Amoco Training Center
Tulsa, Oklahoma

PROFESSIONAL AFFILIATIONS AND COMMUNITY SERVICE

American Association of Petroleum Geologists

West Texas Geological Society

Financing Exploration and Production Association

American Association of Professional Landmen

City of Midland Parks and Recreation Advisory Board-Past Chairman

City of Midland Managed Competition Committee

Pecos River Resolution Corporation – President, Board of Directors

Midland Chamber of Commerce Government Affairs Committee- Past Member

Interstate Oil and Gas Commerce Commission- Past Member

West Texas Multiple Sclerosis Society- Past Member

West Texas Hunting Retriever Club- Past President

REFERENCES

Available upon request

Ernest Angelo, Jr.
410 North Main Street
Midland, Texas 79701
(432) 684 4449

February 14, 2020

Amy Turner
Midland City Secretary

Re: Lourcey Sams application MDC Board

Amy,

I am writing to recommend the appointment of Lourcey Sams to the MDC Board. I have known Lourcey and his family for many years. I have served on a non profit board which he chaired and where he always did an admirable job of supervising the organization.

I believe Lourcey has the ability, integrity and commitment to be an excellent MDC Board member.

Please add this note to Lourcey's application

Thank you,

Ernest Angelo, Jr.

EA/mw

ARLEN L. EDGAR
OIL & GAS INVESTMENTS

OFF: (432) 683-5303
FAX: (432) 683-8507
arlen@arlenledgar.com
414 WEST TEXAS, SUITE 208
MIDLAND, TEXAS 79701

February 13, 2020

Ms. Amy Turner
City Secretary
City of Midland, Texas

RE: Lourcey Sams – MDC Board

Dear Ms. Turner:

This letter is in support of Lourcey Sams as a member of the MDC Board.

I have known Lourcey and certain members of his family for a number of years and believe he is qualified for this role.

He is a long-time resident of Midland and has exhibited a keen interest in the well-being of the community. His biographical summary essentially speaks for itself; however, I would like to emphasize certain elements of his background which I believe qualify him for the MDC Board, as follows:

- Business experience
- Financial knowledge
- Community and public service
- Professional organizations

Very important is his goal of playing a role on the MDC Board and thus enabling his community.

Yours very truly,

Arlen L. Edgar

Arlen L. Edgar

ALE/kh

APPLICATION FOR CITY OF MIDLAND BOARDS/COMMISSIONS/COMMITTEES

As an applicant for a City board, commission, or committee, please be advised that all information on this application is subject to the Texas Open Records Act and will be available to the public.

PLEASE TYPE OR PRINT CLEARLY:

Date: 3/4/2020

Name: Douglas B. (Doug) Schmidt

Phone: 432-553-1145 **(Home)**

Address: 1503 Harvard Avenue

432-217-5202 **(Business)**

Midland Texas 79701

Email: doug@dxs.cc

(City) (State) (Zip)

I am ☑ **I am not** ☐ **a U.S. Citizen**

Please tell us about yourself:

Are you a graduate of Midland 101? ☐ **yes** ☑ **no**

I have lived in Midland 32 **years.**

Occupation: VP of Land and Business Development

Professional and/or Community Activities:

Board Member, Petroleum Club of Midland

Chairman, Forms Committee, American Association of Professional Landmen

I was also a member of the Vision 2020 task force and the 2014 Downtown Future Development task force.

What is your personal vision for the City?

As a native Midlander and business owner, I am supportive of investments that make Midland a better place for a demographic that is accustomed to living in large cities and having the cultural, educational and entertainment offerings available there. We also need to encourage growth of businesses that offer jobs for our highly educated, and provide workforce development education in skilled tra

Please specify any time constraints you may have.

I am a partner in an oil and gas company, and outside of work obligations, I have flexibility in my schedule for meetings and to travel.

Please list below the Board(s) or Commission(s) on which you are interested in serving:

(You can find a complete and current list on the City's website at *www.midlandtexas.gov*)

(1) Name of Board/Commission:

Midland Development Corporation

Please tell us why you are interested in serving on this board or commission.

Our community has helped me to become who I am today personally and professionally, and I view my service on the MDC as a way to give back and by finding ways to encourage new businesses to locate here, support growth of new career opportunities for others.

I also want to help find creative ways to solve challenges for the energy industry and those we face as a city.

What contribution would you most like to make?

I would like to see a continued/renewed focus on downtown. Centennial Park and the new hotel project are the catalysts we need to kick off significant development downtown, and I'd like to work through the MDC to remove or lessen some of the barriers to entry for businesses in to downtown and the central business district.

Additional pertinent information or references:

Laura Roman, laura.roman@weaver.com

(2) Name of Board/Commission:

What contribution would you most like to make?

Additional pertinent information or references:

Applications are maintained on file in the City Secretary's office for a period of one year. Should you need additional information, please call us at 432-685-7430.

Signature of Applicant

Applications may be submitted online via email or print in order to send by mail or fax:

City of Midland
City Secretary's Office
PO Box 1152
Midland, TX 79702
FAX: (432) 685-7433

Submit Via Email

Print Application

Amy Turner

From: Doug Schmidt <dschmidt@pinonres.com>
Sent: Wednesday, March 18, 2020 2:33 PM
To: Amy Turner
Subject: MDC Application
Attachments: SKM_C45820030414440.pdf; ATT00001.htm

Hi Amy,

Thanks for your time on the phone this afternoon. Attached is my application to the MDC. I was encouraged to apply on February 26 after Council decided to expand the number of seats on the board, and I took a few days to visit with a couple of former members and understand more about what the position entails before I applied.

I found out the other day that you didn't receive the application I tried to submit online, so that is why I am late in getting this to you.

Laura Roman will be sending you a letter of recommendation for me via email.

Thank you again,

Doug Schmidt
Vice President - Land & Business Development
Piñon Resources, LLC
(432) 553-1145

Begin forwarded message:

> **From:** "printer@pinonres.com" <printer@pinonres.com>
> **Date:** March 4, 2020 at 2:35:55 PM CST
> **To:** Doug Schmidt <dschmidt@pinonres.com>
> **Subject: Message from KM_C458**
> **Reply-To:** printer@pinonres.com

CAUTION: This email originated from outside your organization — exercise caution when opening attachments or clicking links, especially from unknown senders.

APPLICATION FOR CITY OF MIDLAND BOARDS/COMMISSIONS/COMMITTEES

As an applicant for a City board, commission, or committee, please be advised that all information on this application is subject to the Texas Open Records Act and will be available to the public.

PLEASE TYPE OR PRINT CLEARLY:

Date: 2/16/2020

Name: Joseph Schwab

Phone: 432-684-5766 **(Home)**

Address: 5508 Kingston Drive

_____ **(Business)**

Midland TX 79705

Email: 1980jalan@gmail.com

(City) (State) (Zip)

I am [✓] **I am not** [ ] **a U.S. Citizen**

Please tell us about yourself:

Are you a graduate of Midland 101? [ ] **yes** [✓] **no**

I have lived in Midland 20+ **years.**

Occupation: Retired Geologist

Professional and/or Community Activities:

Former member of American Association of Petroleum Geologists

Former member of West Texas Geologic Society

What is your personal vision for the City?

To improve the quality of life for our citizens

Please specify any time constraints you may have.

None at the current time

Please list below the Board(s) or Commission(s) on which you are interested in serving:

(You can find a complete and current list on the City's website at www.midlandtexas.gov)

(1) Name of Board/Commission:

1) Midland Spaceport Development Corporation

Please tell us why you are interested in serving on this board or commission.

I am currently enrolled in Midland 101 and have learned of the need for residents of Midland to become active on the boards.

What contribution would you most like to make?

I have a strong science background with a graduate degree in geology.

Additional pertinent information or references:

(2) Name of Board/Commission:

Parks & Recreation Commission

What contribution would you most like to make?

I would like to encourage our citizens to take advantage of what our parks have to offer.

I would like to encourage discussions for adding to the variety of recreational activities available to Midland residents.

Additional pertinent information or references:

Applications are maintained on file in the City Secretary's office for a period of one year. Should you need additional information, please call us at 432-685-7430.

Signature of Applicant

Joseph L Church

Applications may be submitted online via email or print in order to send by mail or fax:

City of Midland

City Secretary's Office

PO Box 1152

Midland, TX 79702

FAX: (432) 685-7433

Submit Via Email

Print Application

APPLICATION FOR CITY OF MIDLAND BOARDS/COMMISSIONS/COMMITTEES

As an applicant for a City board, commission, or committee, please be advised that all information on this application is subject to the Texas Open Records Act and will be available to the public.

PLEASE TYPE OR PRINT CLEARLY:

Date: February 11, 2020

Name: Tasha Sport

Phone: 432-528-5919 **(Home)**

Address: 7112 FM 307

_____ **(Business)**

Midland TX 79706

Email: sport.tf@gmail.com

(City) (State) (Zip)

I am [✓] **I am not** [ ] **a U.S. Citizen**

Please tell us about yourself:

Are you a graduate of Midland 101? [ ] **yes** [✓] **no**

I have lived in Midland 35 **years.**

Occupation: Oil & Gas

Professional and/or Community Activities:

I currently volunteer with local animal rescues and organizations. Active Volunteer with Midland Athletic Company for local running ev

What is your personal vision for the City?

My vision for the City of Midland with regard to animal welfare is to change the mindset that animals are more than property. This is to include education of the public of proper treatment of animals, resources to assist with the care of companion animals and a facility that can safely house lost and found animals until adoption or transportation can be secured.

Please specify any time constraints you may have.

NA

Please list below the Board(s) or Commission(s) on which you are interested in serving:

(You can find a complete and current list on the City's website at *www.midlandtexas.gov*)

(1) Name of Board/Commission:

Animal Services Advisory Commission

Please tell us why you are interested in serving on this board or commission.

I would like the opportunity to serve on the Animal Services Advisory Commission in order to be a voice for the animals of Midland Texas. I feel my experience in animal rescue and animal welfare could greatly benefit the animals of Midland

and those working to make decisions on their behalf. Serving the animals and City of Midland would be an honor.

What contribution would you most like to make?

Dealing with and making decisions regarding animals can often be extremely emotional. I believe my contribution would be the ability to make recommendations and decisions that are not emotionally driven. I recognize the problems the community and shelter f but also realize the limitations of both. I feel I have a strong ability to see and evaluate the facts with an open mind and make practic

Additional pertinent information or references:

Tracye Gearhart - 432-934-6555

Dr. Annette Jensen - 432-556-4305

Mark Bassham - 432-425-9813

(2) Name of Board/Commission:

What contribution would you most like to make?

Additional pertinent information or references:

Applications are maintained on file in the City Secretary's office for a period of one year. Should you need additional information, please call us at 432-685-7430.

Signature of Applicant

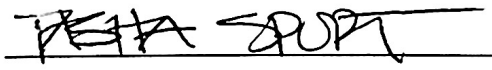

Applications may be submitted online via email or print in order to send by mail or fax:

City of Midland

City Secretary's Office

PO Box 1152

Midland, TX 79702

FAX: (432) 685-7433

Submit Via Email

Print Application

APPLICATION FOR CITY OF MIDLAND BOARDS/COMMISSIONS/COMMITTEES

As an applicant for a City board, commission, or committee, please be advised that all information on this application is subject to the Texas Open Records Act and will be available to the public.

PLEASE TYPE OR PRINT CLEARLY:

Date: February 11, 2020

Name: Ron Stroman

Phone: 432 638 3622 **(Home)**

Address: 5211 Green Tree Blvd

_____ **(Business)**

Midland Texas 79707

Email: roncoair@yahoo.com

(City) (State) (Zip)

I am [✓] **I am not** [ ] **a U.S. Citizen**

Please tell us about yourself:

Are you a graduate of Midland 101? [ ] **yes** [✓] **no**

I have lived in Midland 41 **years.**

Occupation: Retired Insurance Agent & Rancher

Professional and/or Community Activities:

Owned and managed a commercial insurance agency, employing 40 plus employees. Served on various committees at FUMC, currently on the Staff Parish committee. Served two terms on the board of the West Texas Aphasia Center, and volunteer every Monday at the center. I have also served on the Heart Association Board. I am on the Board of West Texas National Bank.

What is your personal vision for the City?

I am of the belief that Midland can be a Top 100 City in the US. I raised two daughters in Midland and currently have three grandchildren living in Midland. Parks, swimming pools, and golf courses attract families to a area. I would like to be a part of making sure Midland offers the best it can of those facilities.

Please specify any time constraints you may have.

Monday mornings I am at the Aphasia Center, doing my volunteer work. The third Tuesday afternoon is a regular scheduled board meeting at WTNB.

Please list below the Board(s) or Commission(s) on which you are interested in serving:

(You can find a complete and current list on the City's website at *www.midlandtexas.gov*)

(1) Name of Board/Commission:

Parks and Recreation Commission

Please tell us why you are interested in serving on this board or commission.

The need to develop and maintain our facilities is paramount to being a top 100 city.

What contribution would you most like to make?

I recognize the need and use of parks, swimming pools and golf courses. As a rancher I understand how weather and climate effects on these assets.

Additional pertinent information or references:

(2) Name of Board/Commission:

What contribution would you most like to make?

Additional pertinent information or references:

Applications are maintained on file in the City Secretary's office for a period of one year. Should you need additional information, please call us at 432-685-7430.

Signature of Applicant

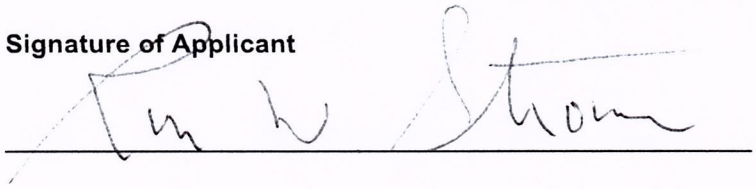

Applications may be submitted online via email or print in order to send by mail or fax:

City of Midland

City Secretary's Office

PO Box 1152

Midland, TX 79702

FAX: (432) 685-7433

Submit Via Email

Print Application

APPLICATION FOR CITY OF MIDLAND BOARDS/COMMISSIONS/COMMITTEES

As an applicant for a City board, commission, or committee, please be advised that all information on this application is subject to the Texas Open Records Act and will be available to the public.

PLEASE TYPE OR PRINT CLEARLY:

Date: 1/30/2020

Name: STEVEN VILLELA

Phone: 432-235-4792 **(Home)**

Address: PO BOX 10721

_____ **(Business)**

MIDLAND TX 79702

Email: STEVENVILLELA@GMAIL.COM

(City) (State) (Zip)

I am [✔] **I am not** [ ] **a U.S. Citizen**

Please tell us about yourself:

Are you a graduate of Midland 101? [ ] **yes** [✔] **no**

I have lived in Midland 20 **years.**

Occupation: MANAGER AT TORTILLERIA LA MEXICANA

Professional and/or Community Activities:

I manage two companies; the first one is a tortilla factory my parents have had for many years, and the second one a landman company I started. I'm a board member for the Hispanic Chamber of Commerce, Co-Chair for the Teen F.L.O.W. Youth Ministry Fundraising Committee, leadership for the Midland LLC, and an ambassador for TPUSA.

What is your personal vision for the City?

I want the city to not only be a place to make money but where you can spend it without having to go to DFW, San Antonio, Austin or any other metropolitan area to have fun. I want to help more entertainment companies start/grow in our area. Facilitate Midland grc so young families can decide that this is where they want to plant roots, build a life and send their kids to school here.

Please specify any time constraints you may have.

I am extreamly flexible with my hours.

Please list below the Board(s) or Commission(s) on which you are interested in serving:

(You can find a complete and current list on the City's website at *www.midlandtexas.gov*)

(1) Name of Board/Commission:

Midland Developmet Cororation

Please tell us why you are interested in serving on this board or commission.

I want to serve on this community to bring some newer ideas of entertainment companies we can either help start or bring to the area. Helping our community have more things to do for families and young adults alike.

What contribution would you most like to make?

I would like to help the board get in contact with other companies that want to start entertainment companies that would work in our city/community. Be a different type of thinker to make the board more diverse in ideas, and finally bring somebody on that has more time to be able to visit/travel to other cities to visit companies we might be interested in bringing to Midland.

Additional pertinent information or references:

(2) Name of Board/Commission:

What contribution would you most like to make?

Additional pertinent information or references:

Jose Cuevas, work number: 432-520-3529, email: jcuevas@jumburrito.com

John Bergman, Cell 432-638-2001, Email: john@bergmanresources.com

Jay MArquez, Cell 432-214-5301, Email jay@teenflow.com

Applications are maintained on file in the City Secretary's office for a period of one year. Should you need additional information, please call us at 432-685-7430.

Signature of Applicant

Steven Villela

Applications may be submitted online via email or print in order to send by mail or fax:

City of Midland

City Secretary's Office

PO Box 1152

Midland, TX 79702

FAX: (432) 685-7433

Submit Via Email

Print Application

MIDLAND
Feel the Energy!

APPLICATION FOR CITY OF MIDLAND BOARDS/COMMISSIONS/COMMITTEES

As an applicant for a City board, commission, or committee, please be advised that all information on this application is subject to the Texas Open Records Act and will be available to the public.

PLEASE TYPE OR PRINT CLEARLY:

Date: 1/31/2020

Name: Rachel Walker

Phone: 325-642-9539 **(Home)**

Address: 4604 Gleneagles DR

_____ **(Business)**

Midland TX 79707

Email: rwalker@crownquest.com

(City) (State) (Zip)

I am [✓] **I am not** [ ] **a U.S. Citizen**

Please tell us about yourself:

Are you a graduate of Midland 101? ___ **yes** [✓] **no** (↓ I am currently enrolled)

I have lived in Midland 4 **years.**

Occupation: CrownQuest Public Affairs Manager

Professional and/or Community Activities:

I am currently enrolled in Midland 101. I am the Communications/PR lead for the Midland Liberty Leadership Council where young adults discuss politics and policy. I am finishing up my training to volunteer with Reflections Ministries' sex-trafficking victims. Professionally, I am involved in various committeess for oil and gas trade organizations.

What is your personal vision for the City?

Like Mayor Payton has said, I want Midland to be a city people are excited to move to and don't look at it as "passing through." My husband nor I are from Midland or West Texas, but we love this city and are committed to making Midland as beloved for others as it is for us. I want to help Midland be better any way I can because I believe Midland can be the place that people never want to leave.

Please specify any time constraints you may have.

As long as I know dates and times of meetings ahead of time, I should have no issue in shuffling professional or personal commitments.

Please list below the Board(s) or Commission(s) on which you are interested in serving:

(You can find a complete and current list on the City's website at www.midlandtexas.gov)

(1) Name of Board/Commission:

Parks and Recreation Commission

Please tell us why you are interested in serving on this board or commission.

It's no secret that we live in a desert, but our city's parks are an oasis in the desert. I want to be a part of ensuring our existing and future parks are enjoyable for generations to come. The City of Midland also does a great job of providing citizens with ways to get

out of the house and enjoy our parks (like Movies in the Park). I hope to help dispell the rumor that there's nothing to do in Midland.

What contribution would you most like to make?

I used to work for the city as the police department's Communications Specialist. I learned during that time the delicate balance between meeting citizens' wants and budget restraints. I assume that balance is only escalated in the Parks and Recreation Dept. I would like to help explore new ways to attain the department's wish list while maintaining fiscal responsibility for citizens.

Additional pertinent information or references:

Sergeant Jimmy Young jyoung@midlandtexas.gov

Chief Seth Herman sherman@midlandtexas.gov

Lauren Melear lmelear@crownquest.com

(2) Name of Board/Commission:

What contribution would you most like to make?

Additional pertinent information or references:

Applications are maintained on file in the City Secretary's office for a period of one year. Should you need additional information, please call us at 432-685-7430.

Signature of Applicant

Applications may be submitted online via email or print in order to send by mail or fax:

City of Midland

City Secretary's Office

PO Box 1152

Midland, TX 79702

FAX: (432) 685-7433

Submit Via Email

Print Application

MIDLAND
Feel the Energy!

APPLICATION FOR CITY OF MIDLAND BOARDS/COMMISSIONS/COMMITTEES

As an applicant for a City board, commission, or committee, please be advised that all information on this application is subject to the Texas Open Records Act and will be available to the public.

PLEASE TYPE OR PRINT CLEARLY:

Name: Dal Watson

Address: 5609 Los Patios Dr.

Midland (City) TX (State) 79701 (Zip)

Date: 2/18/2020

Phone: 432-553-3220 **(Home)**

432-687-0213 x 106 **(Business)**

Email: watsond966@aol.com

I am [✓] **I am not** [ ] **a U.S. Citizen**

Are you a graduate of Midland 101? [ ] **yes** [✓] **no**

Please tell us about yourself:

I have lived in Midland 29 **years.**

Occupation: Insurance Agent

Professional and/or Community Activities:

Past Board Member and Coach, Northern Little League

Former Coach, Greater Midland Football League, Midland Soccer Association, FUMC & UpWard Basketball Leagues

Current Sports Official, Texas Association of Sports Officials, Football-Basketball-Baseball

What is your personal vision for the City?

I've sat in on several of the Priority Midland Quality of Place sessions, and I'd say my vision for the City aligns pretty well with those outlined in the Priority Midland Quality of Place folks. I raised my family here and it's a great place to live but we need to do more to continue to improve the quality of life for families in this community.

Please specify any time constraints you may have.

I'm pretty flexible if given enough advance notice

Please list below the Board(s) or Commission(s) on which you are interested in serving:

(You can find a complete and current list on the City's website at www.midlandtexas.gov)

(1) Name of Board/Commission:

Parks & Recreation Committee

Please tell us why you are interested in serving on this board or commission.

I've been involved in a lot of sports organizations in Midland as I raised my kids here and now that they are grown, I'm interested in putting my time, energy and effort into another aspect of it.

What contribution would you most like to make?

My background in Midland area sports will help in my decisions for the good of the citizens we serve.

Additional pertinent information or references:

(2) Name of Board/Commission:

What contribution would you most like to make?

Additional pertinent information or references:

Applications are maintained on file in the City Secretary's office for a period of one year. Should you need additional information, please call us at 432-685-7430.

Signature of Applicant

Applications may be submitted online via email or print in order to send by mail or fax:

Submit Via Email

City of Midland

City Secretary's Office

PO Box 1152

Midland, TX 79702

FAX: (432) 685-7433

Print Application

ANIMAL SERVICES ADVISORY COMMISSION

(Decision Making; Membership - 7: Terms - 4 Years Expiring 4 odd and 2 even)

MEMBER	TERM EXPIRES	ATTENDANCE	MEETINGS ATTENDED	TOTAL MTGS	ELIGIBLE	NOTES
Alyson Dial	Sept 30 2021	100%	3	3	Yes	
Sara Harris	Sept 30 2021	0%	0	3	Yes	
Leah Lewis	Sept 30 2021	100%	3	3	Yes	
Robert "Robin" Donnelly	Sept 30 2021	33%	1	3	Yes	
Dr. Laura (Erickson) Lee (Vet)	Sept 30 2022	67%	2	3	Yes	
Luann Morgan	Sept 30 2022	0%	0	3	Yes	
J. Annette Jensen	Sept 30 2024					Appointed 4/14/2020
Spencer Robnett (Council Liason)						

APPLICANTS NAME	Additional Boards Applying to	NOTES
Tasha Sport		
Tracye Gearhart		
J. Annette Jensen		
Sharla Hotchkiss	MDC, CDHMAB, P&R	